# United States Court of Appeals

FOR THE EIGHTH CIRCUIT.

## No. 17,441.

CIVIL.

JOHN DEERE COMPANY OF KANSAS CITY,
a Corporation and DEERE & COMPANY,
a Corporation,
*Appellants,*

vs.

WILLIAM T. GRAHAM, and GRAHAM PLOW, INC.,
*Appellees.*

APPEAL FROM THE DISTRICT COURT OF THE UNITED STATES
FOR THE WESTERN DISTRICT OF MISSOURI,
WESTERN DIVISION.

INDEX

Volume I


| | |
|---|---|
| Complaint | 1 |
| Defendant's Second Amended Answer | 3 |
| Plaintiffs' Reply to Defendant's First Amended Counter Claim in Its Second Amended Answer | 7 |
| Interrogatories under Rule 33 of the Federal Rules of Civil Procedure | 8 |
| Defendant's Objections to Certain of Plaintiffs' Interrogatories | 12 |

Memorandum and Order on Defendant's Objections to Certain of Plaintiffs' Interrogatories ..... 13
Defendant's Answers to Certain of Plaintiffs' Interrogatories 13
Stipulation ..... 14
Stipulation ..... 16
Amended Memorandum Opinion, Findings of Fact, and Conclusion of Law ..... 17
Judgment ..... 33
Motion for New Trial ..... 34
Order Denying Defendants' Motion for New Trial ..... 37
Notice of Appeal ..... 39
Stipulation As to Supersedeas Bond and Stay of Judgment Pending Appeal ..... 39
Supersedeas Bond ..... 40
Order Staying Judgment Pending Appeal ..... 42
Defendants' Statement of Points on Appeal ..... 43
Defendants' Designation of Record on Appeal ..... 44
Order for Transmittal of Original Exhibits to the Court of Appeals ..... 46
Order Extending Time for Filing Record and Docketing Appeal 47
Plaintiffs' Designation of Record on Appeal ..... 48
Docket Entries ..... 49
Transcript of Proceedings ..... 52

Plaintiffs' Case—

Charles Theodore Parker—

Direct Examination ..... 53
Cross-Examination ..... 86

George Dwight Hunter—

Direct Examination ..... 87
Cross-Examination ..... 116
Re-Direct Examination ..... 118

F. C. Fenton—

Direct Examination ..... 120
Cross-Examination ..... 150
Re-Direct Examination ..... 221
Re-Cross-Examination ..... 233

Defendants' Case—

William T. Graham—

Direct Examination ..... 239

Clarence T. Fishleigh—

Direct Examination ..... 257

## Volume II

Clarence T. Fishleigh—

Direct Examination (Continued) ..... 285
Cross-Examination ..... 351
Re-Direct Examination ..... 473
Re-Cross-Examination ..... 493
Re-Direct Examination ..... 503
Re-Cross-Examination ..... 506
Re-Direct Examination ..... 513
Re-Cross-Examination ..... 513

George Dwight Hunter—

Direct Examination ..... 515
Cross-Examination ..... 516

Plaintiff's Case in Rebuttal ..... 521

F. C. Fenton, Recalled—

Re-Direct Examination ..... 521
Re-Cross-Examination ..... 539
Re-Direct Examination ..... 570
Re-Cross-Examination ..... 573
Re-Direct Examination ..... 574

## Volume III—Exhibits

Plaintiffs' Exhibit A, Graham Patent No. 2,627,798 ..... 577
Plaintiffs' Exhibit K, Pamphlet of the Deere 900 Series ..... 589
Plaintiffs' Exhibit O, File Wrapper and Contents of Patent 2,739,518 Granted March 27, 1956, to Elmer A. Rolf ..... 593
Plaintiffs' Exhibit P, Soft Copy of the Rolf Patent No. 2,739,518 629
Plaintiffs' Exhibit Q, Opinion Letter of Judge Jos. B. Dooley, Order, Findings of Fact, Conclusions of Law and Judgment 633
Plaintiffs' Exhibit R, Sectional View of the 798 Clamp in the Static Position ..... 643
Plaintiffs' Exhibit S, 798 Clamp at the Full Deflection Position of the Spring ..... 645
Plaintiffs' Exhibit T, Showing Deflection of the Shank Between the Two Points of Support by Dotted Line Drawn Down Below the Bottom of the Shank and at Top of Shank 647
Plaintiffs' Exhibit U, Sectional View of the Changed 798 Clamp with the Hinged Member Inverted ..... 649
Plaintiffs' Exhibit V, Clamp under Stress Position and Fully Depressed ..... 651
Plaintiffs' Exhibit W, Dotted Line Showing the Flexing of the Shank ..... 653

Defendants' Exhibit 1-A, Colored Drawing of the Cockshutt Clamp ..... 655
Defendants' Exhibit 1-B, Colored Drawing of the Cockshutt Clamp ..... 657
Defendants' Exhibit 4, File History of the Patent 798 ..... 659
Defendants' Exhibit 5, Book of Prior Art Patents ..... 705
Defendants' Exhibit 7, Hypothetical General Claim ..... 795
Defendants' Exhibit 8A, Claim 1 from 798 File Wrapper ..... 796
Defendants' Exhibit 8D, Claim 7 from the 798 File History ..... 797

## Volume IV—Exhibits

Defendants' Exhibit 30, "No. 600 Tool Carrier Survey" by E. H. Lee, March, 1953, Product Research Department Copy ..... 799
Defendants' Exhibit 31, "No. 600 Tool Carrier Survey" by E. H. Lee, April, 1953, Product Research Department Copy 823
Defendants' Exhibit 32, Correspondence Produced During the Taking of Depositions of the Employees at Moline, Illinois, of Deere & Company ..... 844
Defendants' Exhibit 33-A, Drawing XCA-318-N ..... 877
Defendants' Exhibit 33-B, Drawing XCA-318 ..... 879
Defendants' Exhibit 34-A, Drawing Attached to Letter of October 23, 1953, Part of Correspondence with Exhibit 32 ..... 881
Defendants' Exhibit 34-B, Another Drawing Attached to Same Letter ..... 883
Defendants' Exhibit 38, Drawing XCL-134-N ..... 885
Defendants' Exhibit 39, Drawing XCL-135-N ..... 887
Defendants' Exhibit 41, Drawing Attached to Letter in Correspondence, Letter Being Dated December 8, 1953 ..... 889
Defendants' Exhibit 44, Copy of the Hunter Patent, No. 2,777,378 ..... 891
Defendants' Exhibit No. 45-A, Drawing of the Fixed Member 895
Defendants' Exhibit No. 45-B, Drawing of the Pivoted Member 897
Defendants' Exhibit 46, Drawing of Final Production Model of the 100 Series ..... 899
Defendants' Exhibit 52-A, Photograph of a Part of the Test Setup ..... 901
Defendants' Exhibit 52-B, Photograph of a Part of the Test Setup ..... 901
Defendants' Exhibit 52-C, Photograph of a Part of the Test Setup ..... 903
Defendants' Exhibit 52-D, Photograph of a Part of the Test Setup ..... 903
Defendants' Exhibit 53, Judge Dooley's Letter Opinion Dated September 9, 1953, in Civil Action No. 1469 in the United States District Court for the Northern District of Texas, Amarillo Division, Styled Jeoffroy Manufacturing, Inc., v. Graham ..... 905
Defendants' Exhibit 54, Judge Dooley's Letter Opinion to Counsel in the Same Case Dated December 18, 1953 ..... 916

| Proceedings in the United States Court of Appeals for the Eighth Circuit | Original | Print |
|---|---|---|
| Opinion, Matthes, J. | 923 | 923 |
| Judgment | 923 | 923 |
| Petition for rehearing | 936 | 934 |
| Order denying petition for rehearing | 937 | 935 |
| Clerk's certificate (omitted in printing) | 943 | 939 |
| Order allowing certiorari | 944 | 940 |
| [illegible] | 945 | 940 |


## WESTERN DIVISION

WILLIAM T. GRAHAM AND GRAHAM PLOW, INC., a corporation, Plaintiffs,

vs.

JOHN DEERE COMPANY OF KANSAS CITY, a corporation, Defendant.

Civil Action No. 12,538-2
Infringement of Letters Patent No. 2,627,798

## COMPLAINT.

(Filed September 24, 1959.)

Now come the Plaintiffs, WILLIAM T. GRAHAM and GRAHAM PLOW, INC., and for their complaint against Defendant, JOHN DEERE COMPANY OF KANSAS CITY, state as follows:

1. This is a suit for infringement of Letters Patent arising under the Patent Laws of the United States.

2. Plaintiff, WILLIAM T. GRAHAM, is a citizen of the United States and a resident of Amarillo, County of Potter, State of Texas. Plaintiff, GRAHAM PLOW, INC., is a private corporation and duly organized under the laws of the State of Texas, with a principal place of business at Amarillo, County of Potter, State of Texas.

3. Defendant, John Deere Company of Kansas City, is a corporation organized and existing under and by virtue of the laws of the State of Missouri, having a principal place of business at Kansas City, Jackson County, Missouri, within the Western District, Western Division, of Missouri.

4. Plaintiff, William T. Graham, has been and now is the owner of Letters Patent of the United States No. 2,627,-798, issued February 10, 1953, for "Clamp for Vibrating Shank Plows", which were duly and legally issued to him by the United States Patent Office. By the grant of said Letters Patent there was secured to the grantee, his heirs, legal representatives and assigns, for the full term of seven-

teen years, from and after the date of issuance of said Letters Patent, the exclusive right and liberty of making, using or vending to others to be used the said invention throughout the United States and territories thereof, as will more fully and at large appear in and by said Letters Patent or duly certified copies thereof which will be in court produced as may be required.

5. Plaintiff, Graham Plow, Inc., has been duly authorized by Plaintiff, William T. Graham, to manufacture, use and sell devices embodying the inventions disclosed and claimed in the Letters Patent aforesaid.

6. Plaintiffs have been and now are engaged in the business of manufacturing and selling deep chisel plows and equipment used in connection therewith, and have expended large sums of money in the manufacture, sale and advertising of such devices and have built up a large and substantial business in such manufacture and sale of said devices.

7. Said Letters Patent of the United States No. 2,627,798 have been held valid and infringed by the Court of Appeals for the Fifth Circuit (*Jeoffroy Mfg., Inc.*, v. *William T. Graham, William T. Graham* v. *Jeoffroy Mfg., Inc.*, 219 F.2d 511; 256 F.2d 360), and again held valid by said Court (*William T. Graham and Graham-Hoeme Plow Co., Inc.*, v. *Cockshutt Farm Equipment, Inc.*, 256 F.2d 358).

8. Defendant, John Deere Company of Kansas City, in wilful infringement of said Letters Patent No. 2,627,798, has manufactured, sold and used apparatus embodying the inventions disclosed and claimed in said Letters Patent No. 2,627,798 and will continue to manufacture, sell and use said apparatus unless enjoined by this Court.

9. That said acts of infringement have been committed within the past six years and have been and are now being committed in Kansas City, Jackson County, Missouri, within the Western District, Western Division, of Missouri, and elsewhere in the United States of America.

10. Defendant has had notice of Plaintiffs' said Letters Patent No. 2,627,798, and Defendant has continued to manufacture, sell and use said apparatus embodying the inventions disclosed and claimed in said Letters Patent in infringement thereof.

WHEREFORE, Plaintiffs demand a preliminary and final injunction against further infringement by Defendant, and those affiliated with or controlled by Defendant; an accounting for profits and damages; that the amount of such damages be increased to a sum not exceeding three times the amount of such damages; an assessment of costs and attorney's fees against Defendant, and for such other and further relief as the Court may deed equitable and just.

Fishburn and Gold
1217 Commerce Trust Building
Kansas City 6, Missouri
By /s/ Claude A. Fishburn
/s/ Orville O. Gold

DATED this 24th day of September, 1959

---

## DEFENDANT'S SECOND AMENDED ANSWER
(Filed December 21, 1961)

Defendant, JOHN DEERE COMPANY OF KANSAS CITY, with leave of Court, files this its Second Amended Answer in response to Plaintiffs' Original Complaint, respectfully alleging as follows:

1. The allegations of paragraph 1 of the Complaint are admitted, but Defendant denies that it has infringed the patent in suit.

2. The allegations of paragraph 2 are admitted.

3. The allegations of paragraph 3 are admitted.

4. Answering paragraph 4 Defendant admits that U. S. Patent No. 2,627,798 was issued on February 10, 1953, to Plaintiff, William T. Graham, and that he is the owner thereof. All other allegations of paragraph 4 are denied.

7. The cases cited in paragraph 7 of the Complaint speak for themselves, but the allegations of said paragraph are admitted, except that it is denied that the issue of validity was litigated or decided in *Jeoffroy Mfg.* v. *Graham,* 256 F.2d 360. Defendant would further show the Court that in *Graham* v. *Cockshutt,* 256 F.2d 358, the Court held that the patent was not infringed. Regardless

of what the holdings were in said cases, they are in no way binding upon this Defendant in this cause.

8. The allegations of paragraph 8 are denied.

9. The allegations of paragraph 9 are denied.

10. The allegations of paragraph 10 are denied. Defendant further says that it was first notified of Plaintiffs' charge of infringement when it was served with summons in this cause.

*Additional Defenses*

By way of further defense Defendant alleges as follows:

11. Patent No. 2,627,798 is invalid and void for lack of novelty and invention.

12. Said patent is invalid and void because the invention, if any, therein disclosed and claimed, or its equivalent, was known or used by others in this country before the alleged invention thereof by the applicant, William T. Graham. Persons having such knowledge or making such use were, among others, Glencoe Manufacturing Co., Glencoe, Minnesota, its employees, Elmer A. Rolf and Howard A. Hoefer, Glencoe, Minnesota, and its customers.

13. Said patent is invalid and void because the invention, if any, therein disclosed and claimed, or its equivalent, was in public use or on sale in this country more than one year prior to the date of the application for such patent in the United States. Persons making such public use or sale were Glencoe Manufacturing Co., Glencoe, Minnesota, its employees and its customers.

14. Said patent is invalid and void because the invention, if any, disclosed and claimed therein, or its equivalent, was made in this country by another person or persons who had not abandoned, suppressed, or concealed it, such other persons being Elmer A. Rolf and/or Howard A. Hoefer, Glencoe, Minnesota, employees of Glencoe Manufacturing Co.

15. Said patent is invalid and void because the differences between the subject matter sought to be patented and the prior art are such that the subject matter as a whole would have been obvious at the time the invention,

if any, was made to a person having ordinary skill in the art to which said subject matter pertains.

Defendant cites the following patents and devices as showing the state of the prior art:

*United States Letters Patent*

| Patent | Date of Issue | Patentee |
|---|---|---|
| 211,003 | Dec. 17, 1878 | Dunbar |
| 231,268 | Aug. 17, 1880 | Carter |
| 284,278 | Sept. 4, 1883 | Cobb |
| 287,965 | Nov. 6, 1883 | Rix |
| 417,775 | Dec. 24, 1889 | Drader, et al. |
| 503,288 | Aug. 15, 1893 | Moore |
| 1,141,804 | June 1, 1915 | Lamprell et al. |
| 1,805,599 | May 29, 1931 | Roberts |
| 1,982,862 | Dec. 4, 1934 | Erdman |
| 2,029,249 | Jan. 28, 1936 | Nell, et al. |
| 2,493,811 | Jan. 10, 1950 | Graham |

*Foreign Patents*

*Australian*

| | | |
|---|---|---|
| 1,056 | March 19, 1926 | Prior |
| 111,910 | Nov. 8, 1940 | Traeger |

*Danish*

| | | |
|---|---|---|
| 57,391 | Mar. 18, 1940 | Petersen |

*Prior Devices*

A spring clamp devised, manufactured and marketed by Jeoffroy Mfg., Inc., Amarillo, Texas, as early as January 1949, such clamp being known as the Jeoffroy SC-580 spring clamp.

A spring clamp devised, manufactured and sold by Glencoe Manufacturing Co., Glencoe, Minnesota, said clamp having been made and tested as early as August 1949, offered for sale as early as March 1950, and actually sold and delivered as early as May 1950.

16. By reason of the proceedings in the United States Patent Office in the prosecution of the application for

Patent No. 2,627,798 Plaintiffs are estopped from maintaining the claims of such patent in such scope as to cover or embrace any device manufactured, used or sold by Defendant.

WHEREFORE, Defendant prays that all relief sought by Plaintiffs be denied, that the Complaint be dismissed, and that Defendant be discharged from all liability and recover its costs and such other relief to which it may be entitled.

## FIRST AMENDED COUNTERCLAIM

For its First Amended Counterclaim against Plaintiffs, the Defendant, JOHN DEERE COMPANY OF KANSAS CITY, alleges as follows:

1. This counterclaim involves an action for declaratory judgment and for further relief in a case of actual controversy involving the validity and alleged infringement of United States Letters Patent No. 2,627,798 and jurisdiction of this Court arises under 28 U. S. C. §2201 and also under the Patent Laws of the United States.

2. Defendant, JOHN DEERE COMPANY OF KANSAS CITY, is a corporation of the State of Missouri, having a principal place of business at Kansas City, Missouri, within the Western District, Western Division of Missouri.

3. Plaintiff, WILLIAM T. GRAHAM, represents that he is a citizen of the United States and a resident of Amarillo, County of Potter, State of Texas and that he is the owner of United States Letters Patent No. 2,627,798. Plaintiff, Graham Plow, Inc., represents that it is a private corporation and duly organized under the laws of the State of Texas, with a principal place of business at Amarillo, County of Potter, State of Texas and that it has been duly authorized by Plaintiff, William T. Graham, to manufacture, use and sell devices embodying the inventions disclosed and claimed in said Letters Patent No. 2,627,798.

4. Defendant avers that said United States Letters Patent No. 2,627,798 are invalid and void and without any force and effect and are not infringed by Defendant for the reasons set forth in paragraphs 11 through 16 of Defendant's foregoing Second Amended Answer, and Defendant

reavers and reaffirms the averments of said paragraphs as if herein fully set forth.

5. Defendant avers that Plaintiffs have asserted and are now asserting in this action that said United States Letters Patent No. 2,627,798 have been and are now being infringed by this Defendant and Defendant denies that it has infringed said patent. An actual controversy therefore exists between Plaintiffs and Defendant.

WHEREFORE, Defendant prays:

1. That the Court declare that said United States Letters Patent No. 2,627,798 are invalid and void and without any force or effect.

2. That the Court declare that Defendant has not infringed in any way upon the aforesaid United States Letters Patent No. 2,627,798.

3. That Defendant have judgment for its costs in this suit and such other and further relief as may be proper.

Gibson, Ochsner, Harlan, Kinney & Morris
630 Amarillo Building
Amarillo, Texas

By /s/ S. Tom Morris
Of Counsel

Scofield, Kokjer, Scofield & Lowe
1325 Rialto Building
Kansas City, Missouri

By /s/ Thos. E. Scofield
Of Counsel
Attorneys for Defendant

---

## PLAINTIFFS' REPLY TO DEFENDANT'S FIRST AMENDED COUNTER CLAIM IN ITS SECOND AMENDED ANSWER

(Filed December 27, 1961)

Plaintiffs for their reply to Defendant's Counterclaim state as follows:

1. In reply to paragraph 1 of Defendant's Counterclaim, Plaintiffs state that the question of validity and infringement of the Letters Patent in suit No. 2,627,798 is the issue under the Complaint and Second Amended Answer and it is immaterial whether or not an action for a declaratory judgment is involved.

2. Plaintiffs admit the allegations of paragraphs 2, 3 and 5 of Defendant's First Amended Counterclaim.

3. Plaintiffs deny the allegations of paragraph 4 of Defendant's First Amended Counterclaim and state that said Letters Patent No. 2,627,798 are valid and have been and are being infringed by Defendant.

WHEREFORE, the Plaintiffs deny that Defendant is entitled to the relief prayed for in the Defendant's First Amended Counterclaim or to any relief whatsoever, and pray that Defendant's First Amended Counterclaim be dismissed and that Plaintiffs be granted in all respects the relief prayed for in the prayer of their complaint herein.

Fishburn and Gold

By /s/ Claude A. Fishburn

Attorneys for Plaintiffs

December 26, 1961

---

## INTERROGATORIES UNDER RULE 33 OF THE FEDERAL RULES OF CIVIL PROCEDURE

(Filed December 4, 1959)

Now come the plaintiffs in the above-entitled cause and propound the following interrogatories to the defendant, John Deere Company of Kansas City, under Rule 33 of the Federal Rules of Civil Procedure, to be answered by an officer of the defendant having knowledge of the facts:

* * *

*Interrogatory No. 2*

State which of said patents and printed publications, if any, listed in paragraph 11 of the Amended Answer herein, discloses a mounting as set forth in Interrogatory

No. 1 having all of the following parts listed in the left-hand column herein below, such parts being capable of the corresponding functions listed in the right-hand column herein below:

| PARTS | FUNCTION |
|---|---|
| (1) A fixed member (or bracket) | (1) which is fixed to the transverse member of the frame and terminates forwardly of the transverse member or beam of the plow whereby the shank of the ground working tool may be secured to the fixed member. |
| (2) Ears | (2) on the fixed member having openings for attaching a plate (shank attaching member.) |
| (3) A shank attaching member between the shank and the fixed member for attaching the shank to the fixed member | (3) having an elongated plate portion provided with an upper face and having a longitudinally extending underface in engagement with the corresponding upper face of the shank. |
| (4) Connecting means | (4) for connecting the plate portion of the shank attaching member to the shank for maintaining the upper face of the shank in contact with the underface of the plate portion of the shank attaching member. |
| (5) A pin | (5) extending transversely through the shank attaching member and engaging in the ears of the fixed member for pivotally connecting the shank attaching member to |

| | |
|---|---|
| | the fixed member whereon the shank attaching member pivots upon rocking movement of the shank. |
| (6) A coil spring | (6) having one end seated on the forward end of the fixed member and extending upwardly therefrom. |
| (7) Connecting means | (7) for connecting the forward end of the shank with the upper end of the coil spring so that the spring will exert pressure on and yieldably maintain the plate or shank attaching member in contact with the fixed member to maintain the normal plowing depth of the ground working tool. |

* * *

*Interrogatory No. 31*

State whether or not there is any flexing of the shank (spring cultivator tooth) in defendant's accused device during a plowing operation.

*Interrogatory No. 32*

State what portion of the length of the shank will flex during a plowing operation.

*Interrogatory No. 33*

State what portion of the length of the shank will not flex during a plowing operation.

* * *

*Interrogatory No. 38*

State whether or not the alleged Glencoe prior use device included a mounting (spring clamp) as set out in Inter-

rogatory No. 37 and embodied the following parts and performed the functions set forth herein below:

| PARTS | FUNCTION |
|---|---|
| (1) A fixed member (or bracket) | (1) which is fixed to the transverse member of the frame and terminates forwardly of the transverse member or beam of the plow whereby the shank of the ground working tool may be secured to the fixed member. |
| (2) Ears | (2) on the fixed member having openings for attaching a plate (shank attaching member). |
| (3) A shank attaching member between the shank and the fixed member for attaching the shank to the fixed member | (3) having an elongated plate portion provided with an upper face and having a longitudinally extending underface in engagement with the corresponding upper face of the shank. |
| (4) Connecting means | (4) for connecting the plate portion of the shank attaching member to the shank for maintaining the upper face of the shank in contact with the underface of the plate portion of the shank attaching member. |
| (5) A pin | (5) extending transversely through the shank attaching member and engaging in the ears of the fixed member for pivotally connecting the shank attaching member to the fixed member whereon the shank attaching member pivots upon rocking movement of the shank. |

| | |
|---|---|
| (6) A coil spring | (6) having one end seated on the forward end of the fixed member and extending upwardly therefrom. |
| (7) Connecting means | (7) for connecting the forward end of the shank with the upper end of the coil spring so that the spring will exert pressure on and yieldably maintain the plate or shank attaching member in contact with the fixed member to maintain the normal plowing depth of the ground working tool. |

* * *

Fishburn and Gold

By: /s/ Claude A. Fishburn

DATED December 4, 1959

---

DEFENDANT'S OBJECTIONS TO CERTAIN OF PLAINTIFFS' INTERROGATORIES

(Filed January 11, 1960)

* * *

*Interrogatories Nos. 31 to 33*

Defendant objects to Plaintiffs' Interrogatories 31 to 33 inclusive, on the grounds that they are not relevant to the subject matter of the action. These interrogatories ask for information as to the flexing of the shank in defendant's accused device. There is nothing in the patent in suit, neither in the claims or in the specification, about flexing of the shank of the device of the patent in suit.

/s/ Thos. E. Scofield

Attorney for Defendant

---

## MEMORANDUM AND ORDER ON DEFENDANT'S OBJECTIONS TO CERTAIN OF PLAINTIFFS' INTERROGATORIES

(Filed March 1, 1960)

* * *

Defendant's Objections to Interrogatories 31, 32 and 33 are sustained. These interrogatories relate to a flexing of the shank of the accused device, and appear irrelevant since such a flexing is not a claim of the patent in suit and Plaintiffs do not undertake to otherwise demonstrate the relevancy of such inquiry.

* * *

/s/ Albert A. Ridge
Judge

Dated at Kansas City, Missouri, this 1st day of March, 1960.

---

## DEFENDANT'S ANSWERS TO CERTAIN OF PLAINTIFFS' INTERROGATORIES

(Filed March 31, 1960)

* * *

*Answer to Interrogatory No. 2*

No single one of the patents and printed publications listed in the aforesaid paragraph 11 of the Amended Answer, standing alone, discloses the specific subject matter of Interrogatory No. 2.

* * *

*Answer to Interrogatory No. 38*

In answer to Interrogatory No. 38, the Glencoe prior use device does not embody the particular structure and relation of parts as expressed in the specific language of Interrogatory No. 38.

* * *

/s/ C. R. Carlson, Jr.
Vice President, John Deere
Company of Kansas City

STATE OF ILLINOIS )
) ss
COUNTY OF ROCK ISLAND )

C. R. CARLSON, JR., having been duly sworn on oath deposes and says that he is Vice President of John Deere Company of Kansas City, defendant in the above action, that he has read the foregoing answers and that to the best of his knowledge, information and belief they are true and correct.

/s/ C. R. Carlson, Jr.

SUBSCRIBED AND SWORN TO BEFORE ME this 29th day of March, 1960.

/s/ Mary E. Denkhoff
Notary Public

---

## STIPULATION

(Filed May 2, 1962)

The parties by their attorneys hereby stipulate as follows:

1. William T. Graham is the owner of United States Patent No. 2,627,798, the patent here in suit.

2. Graham Plow, Inc., is a licensee under said patent, the terms of its license being as shown by the minutes of Graham Plow, Inc., and its corporate predecessors, copies of which minutes are identified as Plaintiffs' Exhibits B (letter June 1, 1946, granting corporation use of Graham patents), B-1 through B-10, for the years 1946, 1948, 1949, 1950, 1953, 1958, and 1959, respectively.

3. Spring clamps in accordance with United States Patent No. 2,627,798 have never been manufactured or sold by William T. Graham, Graham Plow, Inc., or its corporate predecessors.

4. A spring clamp manufactured and sold by Jeoffroy Mfg., Inc., known as the Jeoffroy HT-5 spring clamp, one of which clamps is identified as Plaintiffs' Exhibit C, was commercially successful. Said clamp was held to infringe United States Patent No. 2,627,798 in *Jeoffroy Mfg., Inc.*, v. *Graham*, 219 F.2d 511 (5th Cir., 1955).

5. Jeoffroy Mfg., Inc., was held in contempt in the case of *Jeoffroy Mfg., Inc.*, v. *Graham*, (5th Cir.) 256 F.2d 360, by reason of manufacture and sale of spring clamps in violation of the Court's decree and order in which United States Patent No. 2,627,798 was held valid and infringed by the Jeoffroy HT-5 spring clamp (Plt. Ex. C). Among the spring clamps held in contempt were the Jeoffroy HT-5-A, one of which clamps is identified as Plaintiffs' Exhibit D, and the Jeoffroy HT-6-AD, one of which clamps is identified as Plaintiffs' Exhibit E.

6. Rose Proctor, an employee of Graham Plow, Inc., if called as a witness, would testify that the first drawing of the Graham 798 structure, a copy of which drawing is identified as Plaintiffs' Exhibit F, was made by her at the direction of and pursuant to the instructions of William T. Graham, and that said drawing was completed on March 19, 1950, that further drawings, identified as Plaintiffs' Exhibits G and H were made by her at the direction of and pursuant to the instructions of William T. Graham and were completed respectively on May 16, 1951 and May 19, 1951.

7. All of the prior patents and prior devices cited and relied upon by Defendant herein, except the Rix Patent No. 287,965, the Roberts Patent No. 1,805,599 and the Glencoe clamp, were before the District Court and the Appellate Court in *Jeoffroy Mfg., Inc.*, v. *Graham*, 219 F.2d 511 (5th Cir., 1955), wherein Patent No. 2,627,798 was held to be valid and infringed, and all of the prior art herein cited and relied upon by Defendant was before the District and Appellate Courts in *Graham* v. *Cockshutt*, 256 F.2d 358 (5th Cir., 1958), wherein Patent No. 2,627,798 was held valid but not infringed by the Cockshutt spring clamp there in issue, one of which spring clamps is identified as Defendant's Exhibit No. 1.

8. The John Deere 650 spring clamp, one of which is identified as Plaintiffs' Exhibit I, and the John Deere 100 spring clamp, one of which is identified as Plaintiffs' Exhibit J, have been sold by Defendant, JOHN DEERE COMPANY OF KANSAS CITY, and both of said spring clamps are in issue in this suit. Plaintiffs charge that the John Deere 650 spring clamp infringes claim 1 of Patent No.

2,627,798 and that the John Deere 100 spring clamp infringes both claims 1 and 2 of Patent No. 2,627,798.

9. The Jeoffroy SC-580 spring clamp, one of which is identified as Defendant's Exhibit No. 2, was manufactured and sold in substantial quantities by Jeoffroy Mfg., Inc., as early as January, 1949.

10. Glencoe Manufacturing Co., Glencoe, Minnesota, first made and tested a spring clamp as early as August, 1949, at which time it was exhibited to the public and photographed. Commercial manufacture of such clamp was commenced as early as December, 1949, and said clamp was offered for sale and actual orders were taken as early as March 14, 1950. It was advertised for sale in a printed publication in the United States in April, 1950. Actual sale and delivery thereof was made as early as May 22, 1950, and other sales were made prior to August 27, 1950. The Glencoe device is exemplified by Defendant's Exhibit No. 3.

Dated May 1, 1962.

Fishburn and Gold
Attorneys for Plaintiffs
/s/ Claude A. Fishburn
By /s/ Orville O. Gold
Of Counsel

Gibson, Ochsner, Harlan, Kinney & Morris
Attorneys for Defendant
By /s/ S. Tom Morris
Of Counsel

---

STIPULATION
(Filed May 11, 1962)

It is stipulated by and between the parties to the above-entitled cause that Deere & Company, a Delaware corporation, voluntarily appears as a party Defendant in this action and subjects itself to the jurisdiction of this Court;

That Plaintiffs' pleading shall apply to Deere & Company the same as John Deere Company of Kansas City, and that

Deere & Company as a party Defendant in this suit adopts the answer and other pleadings of the Defendant, John Deere of Kansas City, and otherwise subjects itself to the pleadings in this case, the same as if it had been joined as a party at the beginning of this action.

Fishburn and Gold
/s/ Orville O. Gold
/s/ Claude A. Fishburn
Attorneys for Plaintiffs
/s/ Thos. E. Scofield
/s/ S. Tom Morris
Attorneys for Defendants

May 2, 1962

---

## AMENDED MEMORANDUM OPINION, FINDINGS OF FACT, AND CONCLUSIONS OF LAW

(Filed March 18, 1963)

On February 8, 1963, this Court entered its Memorandum Opinion, Findings of Fact, and Conclusions of Law in this cause. At that time the parties were granted ten days in which to suggest any proposed changes or modifications in the said opinion and findings. The suggested changes and modifications were duly filed by both parties, and duly considered by the Court, and certain changes and modifications were considered necessary by the Court. Therefore, the Memorandum Opinion, Findings of Fact, and Conclusions of Law entered herein on February 8, 1963, are hereby set aside and the following Amended Memorandum Opinion, Findings of Fact, and Conclusions of Law are entered in their place:

This is an action for infringement of United States Letters Patent Number 2,627,798, which was issued to plaintiff William T. Graham on February 10, 1953. The patent was issued for a "Clamp for Vibrating Shank Plows," and will hereinafter be referred to as the "798" patent. Plaintiffs seek a permanent injunction, an accounting, and damages. Defendants contend that the 798 patent was

void or invalid because of lack of novelty or invention, because of anticipation, because of a prior use more than one year prior to the date of the application for such patent, and further because the subject matter of the patent would have been obvious to a person of ordinary skill in the art due to the status of the prior art. Defendants also assert the claim of "file wrapper estoppel," that is, that because of certain proceedings in the patent office during the processing of the 798 patent, plaintiffs are estopped to assert infringement by defendants. Defendants also contend that, if the patent is valid, it has not been infringed and defendants have filed a counterclaim seeking a declaratory judgment to the effect that the 798 patent is void and invalid.

Defendants rely on the prior patents and devices as showing the state of the prior art as follows:

*United States Patent*

| Patent | Date of Issue | Patentee |
|---|---|---|
| 211,003 | Dec. 17, 1878 | Dunbar |
| 231,268 | Aug. 17, 1880 | Carter |
| 284,278 | Sept. 4, 1883 | Cobb |
| 287,965 | Nov. 6, 1883 | Rix |
| 417,775 | Dec. 24, 1889 | Drader, et al. |
| 503,288 | Aug. 15, 1893 | Moore |
| 1,141,804 | June 1, 1915 | Lamprell, et al. |
| 1,805,599 | May 19, 1931 | Roberts |
| 1,982,862 | Dec. 4, 1934 | Erdman |
| 2,029,249 | Jan. 28, 1936 | Noell, et al. |
| 2,493,811 | Jan. 10, 1950 | Graham (Plaintiff) |

*Foreign Patents*

*Australian*

| | | |
|---|---|---|
| 1,056 | Mar. 19, 1926 | Prior |
| 111,910 | Nov. 8, 1940 | Traeger |

*Danish*

| | | |
|---|---|---|
| 57,391 | Mar. 18, 1940 | Petersen |

*Prior Devices*

1. A spring clamp devised, manufactured and marketed by Jeoffroy Mfg., Inc., Amarillo, Texas, as early as January 1948, such clamp being known as the Jeoffroy SC-580 spring clamp.

2. A spring clamp devised, manufactured and sold by Glencoe Manufacturing Co., Glencoe, Minnesota, said clamp having been made and tested as early as August 1949, offered for sale as early as March 1950, and actually sold and delivered as early as May 1950.

United States Letters Patent Number 2,493,811 was issued to plaintiff Graham for a previous similar device, and this patent will be referred to frequently in this opinion, although it is not directly in issue here. It will be referred to simply as the "811" Patent.

The 798 Patent has been the subject of litigation on several previous occasions. In *Jeoffroy Mfg. Co., Inc.*, v. *Graham,* 219 F.2d 511, the 798 Patent was held valid and infringed by the United States Court of Appeals for the 5th Circuit, reversing the decision of the trial court that the patent was invalid. In *Jeoffroy Mfg. Co., Inc.*, v. *Graham,* 256 F.2d 360, the 5th Circuit again held the 798 Patent infringed, affirming the findings of the trial court. And in *Graham* v. *Cockshutt Farm Equipment, Inc.*, 256 F.2d 358, the 5th Circuit again found the 798 Patent valid, but not infringed, affirming the findings of the trial court.

It appears by stipulation that all of the prior patents and prior devices cited and relied upon by the defendants in the case at bar, except the Rix Patent Number 287,965, the Roberts Patent Number 1,805,599, and the Glencoe clamp device, were before the District Court and the Appellate Court in the first *Jeoffroy* case and all the prior art relied upon by defendants in the case at bar was before the District and Appellate Courts in the *Cockshutt* case.

The record shows that, of the prior patents and devices cited and relied upon by defendants in the case at bar, only the following patents were of record in the Patent Office proceedings on the 798 Patent:

*United States Patents*

| | | |
|---|---|---|
| 417,775 | Dec. 24, 1889 | Drader, et al. |
| 2,014,451 | Sept. 17, 1935 | Pfeifer |
| 2,493,811 | Jan. 10, 1950 | Graham |

*Danish Patent*

| | | |
|---|---|---|
| 57,391 | Mar. 18, 1940 | Petersen |

*Australian Patent*

| | | |
|---|---|---|
| 111,910 | Nov. 8, 1940 | Traeger |

None of the other patents relied on by defendants are of record in the Patent Office file with reference to the 798 Patent, nor are any prior devices on record in the Patent Office file. It should be noted that the United States Pfeifer patent, although of record in the Patent Office file, has not been cited by defendants in this case.

The Patent Office file wrapper in the 798 Patent discloses that Graham originally submitted his application with twelve claims. These claims were all rejected by the Patent Office, partially on the grounds that some of the claims failed to patentably distinguish from the 811 Patent, and partially on the grounds of lack of invention. Claims 13 and 14, which eventually issued as claims 1 and 2 of the 798 Patent, were then submitted by Graham to be substituted for the original twelve claims. These two claims, as finally issued, are as follows:

"1. In a plow having a frame and a ground working tool provided with a shank adapted to rock relatively to the frame when the plow is in operation in a forward direction, a mounting for pivotally attaching and supporting the shank of the ground working tool to a transverse member of the frame, the mounting including a fixed member adapted to be fixed to the transverse member of the frame and having a longitudinally extending underface terminating forwardly of the transverse member to which said mounting is adapted to be fixed, the fixed member having ears extending rearwardly from said underface at the sides thereof, a shank attaching member having an elongated plate portion provided

with an upper face corresponding with and normally in contact with said underface of the fixed member and provided with a longitudinally extending underface in engagement with a corresponding upper face of the shank whereby the plate portion of the shank attaching member is between the shank and the fixed member, means connecting the elongated plate portion with the shank for maintaining the upper face of the shank in constant continuous contact with the underface of said plate portion of the shank attaching member, a transverse pin pivotally connecting the shank attaching member to the fixed member at the rear ends of said normally contacting faces and whereon the shank attaching member pivots upon rocking movement of the shank, a coil spring having one end seated on the forward end of the fixed member, and means having connection with the forward end of the shank and with the other end of the coil spring whereby the spring yieldably maintains said normal contact of the upper face of the plate portion of the shank attaching member with the underface of the fixed member to maintain the normal plowing depth of the ground working tool.

"2. In a plow having a frame and a ground working tool provided with a shank adapted to rock relatively to the frame when the plow is in operation in a forward direction, a mounting for pivotally attaching and supporting the shank of the ground working tool to a transverse member of the frame, the mounting including a fixed member adapted to be fixed to the transverse member of the frame and having a longitudinally extending underface terminating forwardly of the transverse member to which said mounting is adapted to be fixed, the fixed member having ears extending rearwardly from said underface at the sides thereof, a shank attaching member having an elongated plate portion provided with an upper face corresponding with and normally in contact with said underface of the fixed member and provided with a longitudinally extending underface in engagement with a corresponding upper face of the shank whereby the plate portion of the shank attaching member is between the shank and the fixed member, said shank attaching member having a lug extending up-

wardly between said ears of the fixed member and disposed at the rear end of the plate portion and above the plane of the underface of the fixed member, said shank attaching member having depending means embracing the shank at the rear end of said plate portion, a bolt connecting the forward end of the plate portion with the forward end of the shank and cooperating with the shank embracing means in maintaining the upper face of the shank in constant continuous contact with the underface of said plate portion, a pivot pin extending transversely through said lug and carried by the ears with the axis thereof above the plane of the underface of the fixed member whereby the normally contacting face of the shank attaching member immediately moves out of contact with and away from the face of the fixed member when the shank attaching member pivots upon rocking movement of the shank, a coil spring having one end seated on the forward end of the fixed member, and means having connection with the forward end of the shank and with the other end of the coil spring whereby the spring yieldably maintains said normal contact of the upper face of the plate portion of the shank attaching member with the underface of the fixed member."

There are actually two devices of defendants involved in this action. One is the "Deere 650" model, which plaintiffs contend infringes upon Claim One of the 798 Patent, and the other is the "Deere 100" model, which plaintiffs claim infringes upon both Claims one and Two of the 798 Patent.

The above-entitled cause came on regularly for trial and the Court having duly considered the evidence and being fully advised in the premises now finds the following:

## FINDINGS OF FACT

### I.

The plaintiff, William T. Graham, resides at Amarillo, Texas, and is a citizen of the United States. The plaintiff, Graham Plow, Inc., is a corporation organized under the laws of the state of Texas, with a principal place of business at Amarillo, Texas. The defendant, John Deere Company of Kansas City, is a corporation organized under the

laws of the state of Missouri, with a place of business at Kansas City, Missouri. The defendant, Deere & Company, is a corporation organized under the laws of the state of Delaware, with a principal place of business in Moline, Illinois.

II.

On February 10, 1953, Letters Patent No. 2,627,798 was issued to William T. Graham on an application filed August 27, 1951, for an invention on "Clamp for Vibrating Shank Plows." William T. Graham is the owner of said patent, and Graham Plow, Inc., is a licensee under said Letters Patent.

III.

This is a suit under the Patent Laws of the United States for infringement of U. S. Letters Patent No. 2,627,798, and this Court has jurisdiction of the parties and the subject matter of this suit.

IV.

In the description and drawings of the Graham patent in suit, there is disclosed what is called a "spring clamp" to connect the upper forward end of a resilient shank to a beam with the lower end of said shank carrying a ground-working tool such as a chisel and the like for plowing or other ground-working operations. The clamp includes a body portion removably attached to the beam with a rearward portion having a pivot pin on which is pivotally mounted a movable part with a plate portion extending forwardly or longitudinally of the normal direction of travel of the plow. The upper forward portion of the shank extends through a stirrup or loop element at the rear of the movable part and longitudinally beneath the plate portion of the movable part and is connected to the plate at the forward end thereof at a substantial distance from the pivot pin, whereby the shank and movable part pivot together about the axis of the pivot pin. A coil spring is arranged at the forward end of the body and, through a nut, washer and spring rod, acts on the shank and plate member to resiliently urge the forward end of

the shank and plate upwardly toward the body of the clamp to a stop engagement therewith to normally hold the shank in normal position. In plowing operations, forces are exerted rearwardly and upwardly on the ground-working tool, and when sufficient to overcome the forces applied by the spring the shank and movable part will pivot on the pivot pin with the forward end of the shank and plate moving downwardly against the tension of the spring. Forces in plowing hold the shank against the rear of the plate of the movable part and when said forces are removed or lessened, or the ground-working tool removed from the ground, the shank at the rear of the movable part is supported by a stirrup or loop that embraces the shank adjacent the pivot of the movable part. In plowing operations, if the ground-working tool strikes a rock or other obstruction, substantial shock and forces are applied to the shank, pivoting the shank and movable member about the pivot pin, tending to compress the spring and permitting upward movement of the ground-working tool whereby it can pass over the rock or obstruction and, as it passes over such obstruction, the stirrup or loop on the movable part supports the shank against excessive rebound. While the stirrup supports the shank at the rear of the movable part, it does so in a manner that permits movement of the shank, thereby retaining the flexibility of the structure and reducing shock.

V.

Prior to the invention in the Graham patent in suit, Graham Plow, Inc.'s predecessor manufactured and sold chisel plows wherein the upper forward portion of the shank was rigidly fixed to the plow beam by a rigid clamp. Said plaintiff corporation's predecessors started selling such chisel plows in the rocky country, but the chisels in striking rocks caused such shocks to be imparted to the equipment that the parts of the plows were bent and broken so that the structures were not satisfactory. In endeavoring to overcome the problems of plowing in the rocky country, Graham devised a spring clamp structure, and on January 10, 1950, was issued Patent No. 2,493,811 entitled "Vibrating Plow and Mounting There-

for," which was prior to the Graham patent in suit. Plaintiff, Graham Plow, Inc., has continued to manufacture and sell plows with spring clamps which embody the principle of the structure of the 811 patent, but neither William T. Graham, the Graham companies, nor any licensee under them has ever manufactured or sold a clamp embodying the 798 structure.

VI.

Prior to defendants putting their John Deere 650 series spring clamp on the market, their only product having a support with any spring action for chisels in plowing was a type having a coil in the shank used on both their 600 and 900 series tools, such shanks having coils of approximately two turns intermediate the ends and rearwardly of the frame. Early in 1953, defendants sent a representative in the field to make a survey to determine if the 600 tool carrier was the right design to compete with Graham and Jeoffroy, the survey reports being defendants' Exhibits 30 dated March 30, 1953, and 31 dated April 17, 1953. Defendants' engineer, Mr. Hunter, who designed the John Deere 650 spring clamp had previously made trips into the field and had seen Graham's spring clamp plows of the 811 type and Jeoffroy's spring clamp plows. It was defendants' practice to obtain copies of patents on farm implements and maintain a library of such copies for the engineers in the factory and also in the defendants' Patent Department, so that when Mr. Hunter was given the assignment of designing a new tillage tool clamp in the spring of 1953, the Graham patent in suit and both of the survey reports (def. Exs. 30 and 31) were available to him. Mr. Hunter designed a clamp and two drawings thereof (defs. Exs. 33-A and 33-B) were sent to the Patent Department of Deere & Company, and said Patent Department, by letter of October 23, 1953 (def. Ex. 32) advised that the proposed spring clamp design infringed claim 1 of the Graham 798 Patent. In that structure, an upper face of the plate of the movable member engaged a lower face of the body or member fixed to the beam, but in a revised design shown in drawings (defs. Exs. 38 and 39), the forward end of the plate was cut off to ex-

pose the extreme forward end of the shank and a lug on the body was extended down to engage the upper face of the shank when said shank was in normal position. The revised design with minor changes became the defendants' commercial device, the John Deere 650 spring clamp (plt. Ex. I), but that structure had the same plowing action as the structure shown in the design (def. Ex. 33-B).

VII.

In 1958, Mr. Hunter was given the project of developing a lighter machine, which project ended in the placing of the John Deere 100 series spring clamp on the market. Mr. Hunter made a preliminary design, drawings of which (def. Exs. 45-A and 45-B) were sent to the Deere Patent Department, which, by letter dated May 7, 1958 (def. Ex. 32) advised that such design would be an infringment of claim 1 of the Graham 798 patent. The preliminary design had a forward end of the pivoted member engaging a forward portion of the body of the fixed member to form a stop when the springs held the pivoted member and shank in normal position. The preliminary design was revised by removal of material on the forward end of the pivoted member and adding some material to the plate portion under the beam which was exposed between body parts secured on the beam so that the plate portion would contact the beam to form the stop when the pivoted member and shank were in normal position, but this change did not change the function or positioning of the shank.

VIII.

The following patents were made of record during the prosecution of the application for the Graham Patent in suit:

| | |
|---|---|
| 417,775 | Drader et al. |
| 2,014,451 | Pfeifer |
| 2,493,811 | Graham |
| 57,391 | Petersen (Danish) |
| 111,910 | Traeger (Australian) |

These patents are relied upon by defendants as part of the prior art in this case.

IX.

Defendants have also cited by way of defense, in addition to the file wrapper patents, the following patents:

| | |
|---|---|
| 211,003 | Dunbar |
| 231,268 | Carter |
| 284,278 | Cobb |
| 287,965 | Rix |
| 503,288 | Moore |
| 1,141,804 | Lamprell et al. |
| 1,805,599 | Roberts |
| 1,982,862 | Erdman |
| 2,029,249 | Noell et al. |
| 1056/26 | Prior (Australian) |

X.

Defendants have also cited by way of defense the following prior devices:

Jeoffroy SC-580 spring clamp (def. Ex. 2) manufactured and marketed by Jeoffroy Mfg. Inc., Amarillo, Texas;

Glencoe spring clamp (def. Ex. 3) manufactured and sold by the Glencoe Manufacturing Co., Glencoe, Minnesota.

XI.

Defendants place principal reliance upon the prior art patents to Cobb 284,278 and Rix 287,965 and the prior device of Glencoe, and contend that the usual presumption of validity does not apply because the Patent Office failed to consider these patents and device, as well as the other additionally cited prior art. All of the prior art cited by defendants was before the Court in the Fifth Circuit in *Graham* v. *Cockshutt,* wherein the decision, 256 F.2d 358, held the Graham patent valid, but not infringed. The disclosures of the prior art not cited by the Patent Office, and particularly the Cobb and Rix patents and the Glencoe device, are similar to some of the patents relied upon by the Patent Office Examiner, as for example the Danish patent of Petersen. Hence, the statutory presumption of validity of the Graham patent in suit is not weakened or destroyed.

XII.

The prior art as a whole in one form or another contains all of the mechanical elements of the Graham 798 structure, and in a broad sense all of the elements are found in one single reference, the Glencoe clamp. However, the particular arrangement of the elements disclosed by 798 is not present in any single reference or as a whole.

XIII.

An improved functional result is obtained by the Graham 798 structure and the main improvement is due to the particular arrangement of the shank in relation to the pivoted member and spring member which reflects in downward flexing of the shank at the forward portion thereof alongside the plate portion of the pivoted member and does lessen wear and tear to some parts of the clamp.

XIV.

The Glencoe structure uses a rotating pivot which prevents rubbing contact of the shank with the fixed member of the clamp and means for attaching the shank to the pivoted member which permits flexibility of the shank posteriorly to the rear of the pivoted member equal in magnitude to that which would be expected in the Graham 798 patent structure. However, the flexing of the shank is different in direction and location relative to the pivoted member than that which occurs in the Graham 798 structure. The Graham 798 patent is an improvement patent and, while the individual mechanical elements may be found in the prior art, taken as a whole the Graham 798 structure is sufficiently different in the operative relationship of the shank and pivoted member with a slight but significant difference in the flexing of the forward portion of the shank that is not found in the prior art, so that the Graham 798 patent involves invention.

XV.

The differences between the Graham 798 patent and the prior art are such that the Graham 798 structure, as covered by claims 1 and 2 thereof, would not have been obvious

at the time Graham made his invention to a person having ordinary skill in the art of agricultural implements and other related arts. It would not have been obvious to a man having ordinary skill in the art to have taken certain components of the prior art and to have combined them in the manner disclosed and claimed in the Graham patent. Even with the full benefit of hindsight, it cannot be said that the Graham structure represents no more than skilled craftsmanship.

XVI.

All of the evidence taken together establishes that defendants, with knowledge of the Graham 798 patent, made designs that infringed the Graham patent and then made minor changes which were differences in degree and not in fact in their commercial structures to provide substantially the same structure and operating substantially in the same manner and providing substantially the same results to actually employ the essence of the Graham invention.

XVII.

It demanded invention of the quality required by the Patent Statutes, Title 35, U.S.C., to produce the structure of the Graham 798 patent. Defendants have failed to sustain the burden imposed by §282, Title 35, U.S.C.

XVIII.

No evidence was introduced to show that defendants' structures were derived from the prior art, from independent experiment, or from any source other than the patented structure itself. In view of this, it is a fair inference that the accused structures had their origin in the Graham 798 patented structure.

XIX.

Defendants have contended that the accused John Deere 650 spring clamp avoids claim 1 of the Graham 798 patent because said accused structure does not have a longitudinally extending underface of the fixed member engaged by the upper face of the plate of the pivoted member. The

Court finds, however, that the fixed member does have an underface, that due to shortening of the plate of the pivoted member, is engaged by an upper face of the shank to provide the same result.

XX.

Defendants have contended that the accused John Deere 100 spring clamp avoids claims 1 and 2 of the Graham 798 patent because an upper face of the plate of the pivoted member engages an underface of the beam instead of the fixed member. The Court finds, however, that in actual use, the engaging faces are equivalent and provide the same result.

XXI.

Defendants assert the "doctrine of File Wrapper Estoppel," i.e., that in the prosecution of his patent within the Patent Office, Graham canceled certain rejected claims, accepted narrower claims in their stead, and is now estopped from obtaining a breadth of construction as broad as that contained in the claims voluntarily canceled. Defendants urge that in this case the patent claims require the stop contact faces of the devices must be the upper face of the plate of the movable member and a lower face of the fixed member and that such faces must have substantial longitudinal length. While claims 1 and 2 of the patent specify the faces as longitudinally extending, they do not specify any extent of longitudinal length, and the location of the faces forwardly of the pivot pin is different from the location of the beak adjacent the pivot pin in the Danish patent of Petersen. The original claims 1 to 12 inclusive in the Graham application as filed were broad in regard to the relative position of the shank and plate of the movable member, and the patent claims are narrower in that the shank is specified as being below the plate of the movable member. The relative location of the parts of the Graham 798 device as specified in the patented claims, when the operative conditions and forces are considered, is not shown in any of the prior art relied on by defendants. Therefore, the Court finds that there is no file wrapper estoppel to a construction of the claims that would

preclude a finding of infringement by the accused Deere structures.

XXII.

The defendants' John Deere 650 spring clamp has all of the elements or the equivalents thereof of claim 1 of the patented structure and performs the same function in the same way as the corresponding element of the patented structure. Defendants' said spring clamp responds to the equivalents of the elements of claim 1 of the Graham patent, and this claim has been infringed by defendants' manufacture and sale of the accused John Deere 650 clamp.

XXIII.

The defendants' John Deere 100 spring clamp has all of the elements or the equivalents thereof of claims 1 and 2 of the patented structure and performs the same function in the same way as the corresponding element of the patented structure. Defendants' said spring clamp responds to the equivalents of the elements of claims 1 and 2 of the Graham patent, and these claims have been infringed by defendants' manufacture and sale of the accused John Deere 100 spring clamp.

XXIV.

All changes or variations in design made by the defendants in its structures 650 and 100 apparently serve no purpose or introduce any different operating principle other than effecting a consciously patterned variation in an attempt to avoid infringement of the plaintiffs' 798 device. This does not necessarily mean that the defendants' actions were in bad faith, as they have a right to construct spring clamp plows so long as their devices do not infringe upon others' patents. But it appears that defendants have definitely used the basic structure and principle of the plaintiffs' patent 798 within the reasonable scope of the coverage of plaintiffs' patent.

XXV.

Defendant's contention on "longitudinally extending underface" as being an essential and restrictive description

of plaintiffs' 798 Patent, is too literal and narrow. Each design of the defendants which literally avoids this description performs exactly the same function and purpose with identical results.

## CONCLUSIONS OF LAW

1.

The Court has jurisdiction over the subject matter of this action and the said parties.

2.

Claims 1 and 2 of the Graham patent No. 2,627,798 are valid.

3.

Claim 1 of the Graham patent No. 2,627,798 has been infringed by defendants' John Deere 650 spring clamp as exemplified by plaintiffs' Exhibit I.

4.

Claims 1 and 2 of the Graham patent No. 2,627,798 have been infringed by defendants' John Deere 100 spring clamp as exemplified by plaintiffs' Exhibit J.

5.

Defendants are jointly and severally liable for damages resulting from infringement of the Graham patent No. 2,627,798 and also for the costs in this action.

6.

Plaintiffs are entitled to a permanent injunction against the defendants in respect to claims 1 and 2 of said Graham patent No. 2,627,798 and to an accounting for compensatory damages, as well as any further recovery authorized by law and awarded in the discretion of the Court.

/s/ Floyd R. Gibson
Judge

Kansas City, Missouri,
March 11, 1963

## JUDGMENT
(Filed March 25, 1963)

The above-entitled action having come on for trial as to the issue of liability before the Court without a jury; the parties having each offered testimony and other evidence, filed briefs and presented oral argument of counsel; and the Court having considered the matter and filed its Memorandum Opinion including findings of fact and conclusions of law:

It is hereby Ordered, Adjudged and Decreed that:

1. The Court has jurisdiction of the parties to and the subject matter of the action.

2. Plaintiff, William T. Graham, is the lawful owner of the entire right, title and interest in U. S. Letters Patent No. 2,627,798, except for a license under said patent granted to plaintiff, Graham Plow, Inc.

3. Claims 1 and 2 of U. S. Letters Patent No. 2,627,798 are each valid.

4. Claims 1 and 2 of U. S. Letters Patent No. 2,627,798 have each been infringed by defendants, John Deere of Kansas City, and Deere and Company.

5. Defendants, John Deere Company of Kansas City, and Deere and Company, their successors, officers, agents, attorneys, associates, employees, and all persons acting in conjunction with said defendants, are hereby enjoined from further infringement of either claims 1 or 2 of said U. S. Letters Patent No. 2,627,798, and in particular, from further using, making, or selling any Model 650 series, Model 100 series, or equivalent models of spring clamp plows manufactured by defendants, during the remaining term of said patent.

6. Plaintiffs shall have judgment against defendants for damages determined in accordance with Title 35, United States Code, §284, the amount of said damages to be hereafter determined upon further proceedings, for which purpose the Court retains jurisdiction.

7. On the counterclaim of defendants for declaratory judgment, the Court finds the issues in favor of the plaintiffs and against the defendants.

8. Plaintiffs shall have judgment for their costs in this action, to be hereafter taxed in accordance with Rule 54(c), Federal Rules of Civil Procedure.

Enter:

/s/ Floyd R. Gibson
Judge

March 25, 1963

---

MOTION FOR NEW TRIAL
(Filed April 3, 1963)

Pursuant to Rule 59 of the Federal Rules of Civil Procedure Defendants move the Court to set aside the Findings of Fact and Conclusions of Law entered on March 11, 1963, and the Judgment entered on March 25, 1963, and to grant a new trial upon the following grounds:

I.

The Court has erred in holding that Patent No. 2,627,798 is valid for the following reasons:

A. The Court has failed to give proper consideration and effect to the rule that the presumption of validity is weakened when pertinent prior art was not considered by the Patent Office and the Court's Finding No. XI that the presumption of validity of the 798 patent is not weakened by the fact that pertinent prior art was not considered by the Patent Office is clearly wrong.

B. The Court has applied an incorrect test of invention as shown by the following:

1. The established rule of the Supreme Court and of the Eighth Circuit Court is that a combination of old elements does not amount to invention unless the combination produces some new, surprising or unexpected result and that mere improvement of function, efficiency or economy is not enough.

2. The Court has found that the 798 structure is a combination of old elements. The Court has not found any new, surprising or unexpected result, but on the contrary

has found only an improved functional result and a reduction of wear to some parts of the clamp. Those findings do not meet the test and are insufficient to support a finding of invention.

C. The Court's finding of improved functional result reflected mainly in a downward flexing of the 798 shank in the forward portion thereof alongside the plate portion of the pivoted member (Finding No. XIII) and a significant difference in the flexing of the forward end of the shank (Finding No. XIV) are clearly wrong in that: (1) the undisputed evidence is that there was substantially similar flexing in the forward portion of the shank in the Graham 811, Jeoffroy SC-580 and Glencoe prior use devices, the only differences being a slight difference in distribution of the flex and a difference in direction relative to the plate portion of the pivoted member, and (2) the undisputed evidence is that the small amount of flex in the forward portion of the 798 shank is insignificant and unimportant to the function and operation of the device.

D. Such flexing in the forward end of the shank, even if it were significant, was not mentioned or claimed in the patent or the File Wrapper history and therefore does not support a finding of invention.

E. The Court's finding that the Graham 798 arrangement reduces wear and tear to some parts of the clamp (Finding No. XIII) is clearly wrong in that it disregards the Glencoe clamp and the evidence with respect thereto. It is conceded that the 798 arrangement would reduce wear and tear to some parts of the clamp as compared to the Graham 811 clamp, but the undisputed evidence is that the 798 clamp affects no improvement in that respect as compared to the Glencoe clamp.

F. The Court's Finding No. XV that the Graham 798 structure would not have been obvious to a person having ordinary skill in the art is clearly wrong in that: (1) there is no evidence to support such finding; (2) the evidence is insufficient to support such finding; and (3) such finding is contrary to the weight and preponderance of the evidence.

## II.

The Court has erred in holding that the Deere 650 clamp infringes Claim 1 of the patent and in holding that the Deere 100 clamp infringes Claims 1 and 2 of the patent for the following reasons:

A. The Court has construed and applied the claims broadly rather than narrowly as required by the language of the claims, the context of the patent, the prior art and the File Wrapper history.

B. The Court's Findings XVI, XIX, XX, XXII, XXIII, XXIV and XXV to the effect that the Deere 650 clamp is the equivalent of Claim 1, that the Deere 100 clamp is the equivalent of Claims 1 and 2 and that both Deere clamps have used the basic structure, principle and essence of the Graham invention are clearly wrong in that: (1) there is no evidence to support such findings; (2) the evidence is wholly insufficient to support such findings; (3) such findings are clearly contrary to the weight and preponderance of the evidence, and (4) the Court has applied an incorrect test and range of equivalence.

C. The Court's Finding No. XXI that the doctrine of File Wrapper Estoppel does not limit the scope of the claims of the 798 patent so as to preclude their application to the Deere 650 and 100 clamps is clearly wrong in that: (1) there is no evidence to support such finding; (2) the evidence is insufficient to support such finding; (3) such finding is clearly against the weight and preponderance of the evidence, and (4) the Court has applied an incorrect rule of File Wrapper Estoppel.

D. If the 798 patent is valid and if, as the Court has found, a significant feature thereof is a flex in the forward portion of the shank downwardly from the plate portion of the pivoted member, then the Court's implied finding that the Deere 650 and 100 clamps so function is clearly wrong in that: (1) there is no evidence to support such finding; (2) the evidence is insufficient to support such finding; and (3) such finding is clearly contrary to the weight and preponderance of the evidence.

WHEREFORE, Defendants pray that this motion be sustained and that a new trial be granted.

Respectfully submitted,

Scofield, Kokjer, Scofield & Lowe
Gibson, Ochsner, Harlan, Kinney & Morris
Attorneys for Defendants

By: /s/ S. Tom Morris
Of Counsel

---

## ORDER DENYING DEFENDANTS' MOTION FOR NEW TRIAL

(Filed June 26, 1963)

This is an action for patent infringement. The case has been tried, and on March 18, 1963, the Court filed its final Amended Memorandum Opinion, Findings of Fact, and Conclusions of Law, holding the patent in question valid and infringed. Judgment against defendants was entered on March 25, 1963. On April 5, 1963, judgment was stayed, pending disposition of defendants' motion for a new trial, which was filed on April 3, 1963. On June 4, 1963, a hearing of oral arguments was had on defendants' motion for a new trial.

Defendants' motion raises several points, most of which were covered to a large extent in the final opinion rendered in this case, and the Court will not dwell on these points. One point, however, will be treated here. This is the defense of "file wrapper estoppel" raised by defendant.

The patent application was originally filed in twelve claims. Admittedly, these claims were so broad that no patent could have been granted thereon, as they would probably have covered all similar devices operating on the same principle which had theretofore been invented or which thereafter might have been.

The claims were then amended by plaintiff to two much narrower claims. Defendants now assert that, plaintiff having narrowed his claims to secure the issuance of his

patent, he cannot now have the claims construed to give broad enough coverage so that defendants' devices may be interpreted as infringing.

The principle restrictive terms added to the amended claims refer mainly to the form and location of the parts of the plow and the physical form and appearance of the plow was not changed. The essence of defendants' contention is that the restrictions as to form and location which were added to the amended claims should be read literally, or nearly so, and that the doctrine of equivalents should not be applied to hold defendants' devices as infringing.

The defendants' devices do not literally read upon the claims in the patent. This is admitted by all parties. However, it is the opinion of the Court that defendants' devices do perform substantially the same function, using substantially the same means, in substantially the same manner, as the device described in plaintiffs' patent. In the opinion of the Court, the fact that one of defendants' devices uses a lug contacting the shank of the plow as a stop instead of a full longitudinal contact between the pivoted member and the fixed member is not enough of a distinction, when the doctrine of equivalents is applied, to take defendants' device out of the realm of infringement. Also, the fact that, in a second device of defendants', the fixed I beam of the frame takes the place of the longitudinally extended underface of the fixed member in acting as a stop, is not enough to escape infringement, under the doctrine of equivalents.

It is the opinion of the Court that it is not an improper extension of the doctrine of equivalents, as applied to the defense of file wrapper estoppel, to state that defendants' devices are functionally equivalent to that described in plaintiffs' patent. The basic functional parts of plaintiffs' device are all present in those of defendants, and the relative position and form of these parts are substantially the same in each of the devices. Any differences result simply from a shifting of points of contact or pressure, or the functional substitution of a part of one element for that of another, when this substitution actually results in a functional assimilation by one element of the other.

Defendants' motion for a new trial is denied.

IT IS SO ORDERED.

/s/ Floyd R. Gibson
Judge

Kansas City, Missouri,
June 26, 1963

---

NOTICE OF APPEAL
(Filed July 17, 1963)

Notice is hereby given that JOHN DEERE COMPANY OF KANSAS CITY, a corporation, and DEERE & COMPANY, a corporation, Defendants, hereby appeal to the United States Court of Appeals for the Eighth Circuit from the Judgment entered in the above cause on March 25, 1963, and from the Order Denying Motion for New Trial entered in said cause on June 26, 1963.

Scofield, Kokjer, Scofield & Lowe
By /s/ Thos. E. Scofield
Of Counsel

Gibson, Ochsner, Harlan, Kinney & Morris
Attorneys for Defendants
By /s/ S. Tom Morris
Of Counsel

---

STIPULATION AS TO SUPERSEDEAS BOND AND STAY OF JUDGMENT PENDING APPEAL
(Filed July 17, 1963)

Defendants having filed notice of appeal in this cause and desiring to supersede the judgment herein pending final determination on appeal, it is agreed and stipulated between the parties that the amount of the supersedeas bond shall be TWO HUNDRED THOUSAND AND NO/100 ($200,000.00) DOLLARS, and that upon the filing of such bond by Defendants and the approval thereof by the Court,

the Judgment entered herein on March 25, 1963, shall be in all things stayed until the final determination of this cause on appeal.

It is further agreed and stipulated that this agreement as to the amount of the bond shall not in any manner determine or have any bearing upon the amount of damages, if any, to which Plaintiffs might ultimately be entitled

DATED this 17 day of July, 1963.

Fishburn and Gold
Attorneys for Plaintiffs

By /s/ Claude A. Fishburn
Of Counsel

Scofield, Kokjer, Scofield & Lowe
Attorneys for Defendants

By /s/ Thos. E. Scofield
Of Counsel

Gibson, Ochsner, Harlan, Kinney & Morris
Attorneys for Defendants

By /s/ S. Tom Morris
Of Counsel

---

SUPERSEDEAS BOND

KNOW ALL MEN BY THESE PRESENTS, that we, JOHN DEERE COMPANY OF KANSAS CITY, a corporation, and DEERE & COMPANY, a corporation, as Principals, and FEDERAL INSURANCE COMPANY, as Surety, are held and firmly bound unto WILLIAM T. GRAHAM and GRAHAM PLOW, INC., in the sum of TWO HUNDRED THOUSAND AND NO/100 ($200,000.00) DOLLARS to be paid to the said WILLIAM T. GRAHAM and GRAHAM PLOW, INC., their attorneys, successors, executors, administrators or assigns, to which payment to be well and truly made we bind ourselves, our heirs, executors, administrators, successors and assigns, jointly and severally by these presents.

Sealed with our seals and dated this 17th day of July, 1963.

WHEREAS, on March 25, 1963, a judgment was rendered in the above-entitled action in favor of the above named obligees, and on June 26, 1963, an order was entered in said action denying the motion for new trial of JOHN DEERE COMPANY OF KANSAS CITY and DEERE & COMPANY, and the said JOHN DEERE COMPANY OF KANSAS CITY and DEERE & COMPANY have duly filed a notice of appeal from said judgment and order to the Court of Appeals for the Eighth Circuit; and

WHEREAS, the said JOHN DEERE COMPANY OF KANSAS CITY and DEERE & COMPANY desire a stay of all proceedings in the above-entitled cause until the determination of the said appeal,

NOW, THEREFORE, the condition of this bond is such that if the said JOHN DEERE COMPANY OF KANSAS CITY and DEERE & COMPANY, as Appellants, shall prosecute their appeal with effect and shall satisfy the said judgment in full together with costs, interest and damage for said delay if said appeal is dismissed or if the judgment is affirmed, and shall satisfy in full such modification of the judgment and costs, interest and damages as may be adjudged and awarded by the Court of Appeals, then this obligation to be void, otherwise to remain in full force and effect.

John Deere Company of Kansas City

By: /s/ M. K. Hubbard
Vice President

Deere & Company

By: /s/ Lewis D. Wilson
Vice President
Principals

Federal Insurance Company

By /s/ Albert E. Hart, Jr.
Attorney-in Fact
Surety

The foregoing bond is hereby approved this 17th day of July, 1963, to stand as a supersedeas until the final determination of the appeal.

/s/ Floyd R. Gibson
United States District Judge

---

ORDER STAYING JUDGMENT PENDING APPEAL
(Filed July 17, 1963)

It being shown to the Court that Defendants have duly filed notice of appeal, that the parties have stipulated as to the amount of the supersedeas bond and a stay of judgment pending appeal, and that Defendants have filed supersedeas bond in accordance with said stipulation;

IT IS THEREFORE ORDERED that the judgment of this Court entered in this cause on March 25, 1963, be and the same is hereby in all things stayed pending final determination of this cause upon appeal.

DATED this 17th day of July, 1963.

/s/ Floyd R. Gibson
United States District Judge

Approved:

Fishburn and Gold
Attorneys for Plaintiffs

By /s/ Claude A. Fishburn
Of Counsel

Scofield, Kokjer, Scofield & Lowe
Attorneys for Defendants

By /s/ Thos. E. Scofield
Of Counsel

Gibson, Ochsner, Harlan, Kinney & Morris
Attorneys for Defendants

By /s/ S. Tom Morris
Of Counsel

---

## DEFENDANTS' STATEMENT OF POINTS ON APPEAL

(Filed July 31, 1963)

Pursuant to Rule 75(d) of the Federal Rules of Civil Procedure Defendants make the following statement of points upon which they intend to rely on appeal:

### I.

The District Court erred in holding United States Patent No. 2,627,798 valid for the following reasons:

A. The Court failed to give proper consideration and effect to the rule that the presumption of validity is weakened when pertinent prior art was not considered by the Patent Office, and the Court's finding that the presumption of validity in this case is not weakened by the fact that pertinent prior art was not considered by the Patent Office is clearly wrong.

B. The Court applied an incorrect and improper test of invention.

C. The Court's finding that Patent No. 2,627,798 exhibits invention and would not have been obvious to a person having ordinary skill in the art is clearly wrong.

### II.

The District Court erred in holding that the Deere 650 clamp infringes claim 1 of the patent and in holding that the Deere 100 clamp infringes claims 1 and 2 of the patent, for the following reasons:

A. The Court construed and applied the claims of the patent broadly rather than narrowly as required by the language of the claims, the context of the patent, the prior art and the File Wrapper history.

B. The Court applied an incorrect and improper test and range of equivalence.

C. The Court's finding that the Deere 650 clamp is the equivalent of and infringes claim 1 of the patent is clearly wrong.

D. The Court's finding that the Deere 100 clamp is the equivalent of and infringes claims 1 and 2 of the patent is clearly wrong.

E. The Court's finding that the doctrine of File Wrapper Estoppel does not limit the scope of the claims so as to preclude their application to the Deere 650 and 100 clamp is clearly wrong.

Respectfully submitted,

Scofield, Kokjer, Scofield & Lowe
1325 Rialto Building
Kansas City, Missouri

By /s/ Thos. M. Scofield
Of Counsel

Gibson, Ochsner, Harlan, Kinney & Morris
630 Amarillo Building
Amarillo, Texas

By /s/ S. Tom Morris
Of Counsel
Attorneys for Defendants

---

## DEFENDANTS' DESIGNATION OF RECORD ON APPEAL

(Filed July 31, 1963)

Pursuant to Rule 75 of the Federal Rules of Civil Procedure Defendants hereby designate the following portions of the record, proceedings, and evidence to be contained in the record on their appeal in this cause:

1. The Complaint.

2. Defendants' Second Amended Answer and First Amended Counterclaim.

3. Plaintiffs' Reply to Defendants' First Amended Counterclaim.

4. The following portion of Plaintiffs' Interrogatories dated December 4, 1959, to-wit: the introductory paragraph and Interrogatories 31, 32, and 33.

5. The following portion of Defendants' Objections to Certain of Plaintiffs' Interrogatories, to-wit: the objection to Interrogatories Nos. 31 to 33.

6. The following portions of the Court's Memorandum and Order on Defendants' Objections to Certain of Plaintiffs' Interrogatories, to-wit: The Court's ruling with respect to Defendants' Objections to Interrogatories 31, 32 and 33 which reads as follows:

> "Defendants' Objections to Interrogatories 31, 32 and 33 are sustained. These interrogatories relate to a flexing of the shank of the accused device, and appear irrelevant since such a flexing is not a claim of the patent in suit and Plaintiffs do not undertake to otherwise demonstrate the relevancy of such inquiry."

7. Stipulation between the parties dated May 1, 1962.

8. Stipulation between the parties for the voluntary appearance of Deere & Company as a party Defendant, dated May 2, 1962.

9. The Reporter's Complete Original Transcript of proceedings had at the trial, including all of Plaintiffs' Exhibits except B. 1-10, F., G., H., X., and Y., and all of Defendants' Exhibits except Exhibits 49 and 50.

10. The Court's Amended Memorandum Opinion, Findings of Fact and Conclusions of Law dated March 11, 1963.

11. The Court's Judgment dated March 25, 1963.

12. Defendants' Motion for New Trial.

13. The Court's Order Denying Defendants' Motion for New Trial, dated June 26, 1963.

14. Defendants' Notice of Appeal.

15. Stipulation as to Supersedeas Bond and Stay of Judgment pending appeal.

16. Supersedeas Bond.

17. Order Staying Judgment Pending Appeal.

18. Defendants' Statement of Points on Appeal.

19. Defendants' Designation of Record for their appeal.

20. Any Orders to transmit original exhibits to the Court of Appeals.

21. Any Orders extending time for filing record and docketing appeal.

22. Clerk's Certificate.

Respectfully submitted,
Scofield, Kokjer, Scofield & Lowe

By /s/ Thos. M. Scofield
Of Counsel

Gibson, Ochsner, Harlan, Kinney & Morris

By /s/ S. Tom Morris
Of Counsel
Attorneys for Defendants

---

## ORDER FOR TRANSMITTAL OF ORIGINAL EXHIBITS TO THE COURT OF APPEALS

(Filed August 26, 1963.)

Upon agreement of the parties, and it appearing to the Court that it would be beneficial for the Court of Appeals to inspect certain of the original exhibits in this cause,

IT IS ORDERED that the following original exhibits be transmitted to the United States Court of Appeals for the Eighth Circuit in connection with Defendants' appeal, to-wit:

Plaintiffs' Exhibits C, D, D-1, E, E-1, I, J, L, M, N, and X.

Defendants' Exhibits 1, 2, 3, 3-A, 6, 11, 12, 13, 14A, 14B, 14C, 15, 16, 17, 17-A, 18, 19, 20, 21-A, 21-B, 21-C, 21-D, 22, 23, 24, 25, 26, 26-A, 27, 27-A, 28, 29, 30, 31, 33-A, 33-B, 34-A, 34-B, 38, 39, 41, 42-A, 42-B, 42-C, 42-D, 42-E, 42-F, 42-G, 42-H, 42-I, 45-A, 45-B, 46, 49, 52-A, 52-B, 52-C, and 52-D.

DATED August 26th, 1963.

/s/ Floyd Gibson
United States District Judge

Approved:

Fishburn & Gold
Attorneys for Plaintiffs

By /s/ Claude A. Fishburn
Of Counsel

Scofield, Kokjer, Scofield & Lowe

By _____
Of Counsel

Gibson, Ochsner, Harlan, Kinney & Morris

By /s/ S. Tom Morris
Of Counsel
Attorneys for Defendants

---

## ORDER EXTENDING TIME FOR FILING RECORD AND DOCKETING APPEAL

(Filed August 16, 1963.)

Upon agreement of the parties it is ordered that the time for filing the record and docketing the appeal of this cause in the United States Court of Appeals for the Eighth Circuit be and it is hereby extended to September 26, 1963,

which date is within the time as authorized by Rule 73(g) of the Federal Rules of Civil Procedure.

DATED this 16th day of August, 1963.

/s/ John W. Oliver
United States District Judge

Approved:

Fishburn and Gold
Attorneys for Plaintiffs

By /s/ Claude A. Fishburn
Of Counsel

Scofield, Kokjer, Scofield & Lowe

By /s/ Carter H. Kokjer
Of Counsel

Gibson, Ochsner, Harlan, Kinney & Morris

By /s/ S. Tom Morris
Of Counsel
Attorneys for Defendants

---

PLAINTIFFS' DESIGNATION OF RECORD ON APPEAL
(Filed August 8, 1963)

Plaintiffs designate for inclusion in the record on appeal in the above-entitled cause Plaintiffs' Interrogatories numbered 2 and 38 and Defendants' Answers thereto.

* * *

Plaintiffs also designate (physical exhibits) Plaintiffs' Exhibit X and Defendants' Exhibit 49 (offered by Plaintiffs).

Plaintiffs' Designation of Record on Appeal.

Dated: August 7, 1963.

Fishburn and Gold
By /s/ Claude A. Fishburn
Attorneys for Plaintiffs

---

## DOCKET ENTRIES

### Filings—Proceedings

| | | |
|---|---|---|
| Sept. | 24, 1959 | Complaint filed. |
| Nov. | 13, " | Answer & Counter-claim filed. |
| Nov. | 30, " | Plaintiffs' reply to defendant's Counterclaim filed. |
| Dec. | 2, " | Defendant's Amended Answer and Counterclaim filed. |
| Dec. | 4, " | Plaintiffs' Interrogatories to defendant filed. |
| | | Plaintiffs' Reply to defendant's counterclaim in its amended answer filed. |
| Jan. | 11, 1960 | Defendant's Objections to certain of Plaintiffs' Interrogatories and brief in support thereof filed. |
| Jan. | 18, " | Defendant's answers to certain of plaintiffs' Interrogatories filed. |
| Mar. | 1, " | Memorandum and Order on defendant's objections to certain of plaintiffs' interrogatories filed. (overruled in part and sustained in part) |
| Mar. | 31, " | Defendant's answers to certain of Plaintiffs' Interrogatories filed. |
| Dec. | 21, 1961 | Defendant's Second Amended Answer and First Amended Counterclaim filed. |
| Dec. | 27, " | Plaintiffs' Reply to Defendant's First Amended Counterclaim filed. |
| Jan. | 4, 1962 | Pre-Trial Memorandum and Order filed. (Defendant granted leave to amend its answer—Parties to file stipulation of agreed facts.) |
| Jan. | 30, " | Modification of Pre-Trial Order and Memorandum of January 3, 1962, filed. |
| Apr. | 13, " | Motion of Plaintiffs to add Deere and Company as Party defendant with suggestions in support filed. |
| May | 1, " | Order sustaining motion to add party defendant filed. |

| | | |
|---|---|---|
| May | 2, " | Parties appear by counsel and announce ready for trial. Trial is to the Court. Stipulation filed. Opening statements are made by respective counsel. Plaintiffs present evidence; said evidence not completed at the hour of adjournment, further proceedings postponed until May 3, 1962. |
| May | 3, " | Trial resumed. Plaintiffs continue evidence. |
| May | 4, " | Trial resumed. Plaintiffs continue evidence and rest. Defendants introduce testimony. Further proceedings postponed until May 7, 1962. |
| May | 7, " | Trial resumed. Defendants continue evidence. |
| May | 8, " | Trial resumed. Defendants continue evidence. |
| May | 9, " | Trial resumed. Defendants continue evidence. |
| May | 10, " | Trial resumed. Defendants complete evidence and rest. Plaintiffs introduce evidence in rebuttal. |
| May | 11, " | Trial resumed. Plaintiffs complete evidence in rebuttal and rest. Case submitted and taken under advisement. Parties to file briefs and suggested findings of fact and conclusions of law simultaneously thirty days after receipt of transcript of record. Reply briefs to be filed 15 days thereafter. |
| Oct. | 29, " | Transcript of Proceedings filed. (3 volumes) |
| Feb. | 8, 1963 | Memorandum Opinion, Findings of Fact and Conclusions of Law filed. Letter from Judge Gibson granting counsel 10 days in which to submit any suggested amendments to Memorandum Opinion filed herein.) |
| Feb. | 15, " | Letter from defendants' counsel suggesting amendments filed. |

| | | |
|---|---|---|
| Feb. | 20, " | Letter from Plaintiffs' counsel suggesting amendments filed. |
| Mar. | 18, " | Amended Memorandum Opinion, Findings of Fact, and Conclusions of law filed. *Judge Floyd R. Gibson.* |
| Mar. | 25, " | JUDGMENT FILED. (Plaintiff William T. Graham lawful owner U. S. Letters Patent No. 2,627,798. Claims 1 and 2 of said patent are valid. Claims 1 and 2 have been infringed by defendants. Defendants enjoined from infringing of claims 1 and 2 of said patent. Plaintiffs shall have judgment for damages against defendants in accordance with Title 35, U.S.C., Sec. 284. Issues in favor of Plaintiffs and against defendants on defendants' Counterclaim. Costs are assessed against defendants.) |
| Apr. | 3, " | Motion for New Trial with suggestions in support filed. |
| Apr. | 5, " | Order staying Judgment pending Motion for New Trial filed. |
| June | 4, " | Respective parties appear by counsel for hearing on defendants' Motion for New Trial. Arguments are made and the Motion submitted and taken under advisement. |
| Jun. | 26, " | Order denying defendants' Motion for New Trial filed. |
| July | 17 " | Defendants' NOTICE OF APPEAL FILED. Copies mailed to Counsel for Plaintiffs. |
| | | Order staying Judgment pending Appeal filed. |
| | | Stipulation as to Supersedeas Bond and stay of Judgment pending appeal filed. Supersedeas Bond approved and filed. |
| Jul. | 31, " | Defendants' Designation of Record on Appeal filed. |
| | | Defendants' Statement of Points on Appeal filed. |

| | | |
|---|---|---|
| Aug. | 8, " | Plaintiffs' Designation of Record on Appeal filed. |
| Aug. | 9, " | Exhibits filed. |
| Aug. | 16, " | Order extending to September 26, 1963, to docket the appeal filed. |
| Aug. | 26, " | Order for transmittal of original Exhibits to the Court of Appeals filed. |

---

[1]* IN THE UNITED STATES DISTRICT COURT
FOR THE WESTERN DISTRICT OF MISSOURI
WESTERN DIVISION

WILLIAM T. GRAHAM and GRAHAM PLOW, INC.,
Plaintiffs,
vs.
JOHN DEERE COMPANY OF KANSAS CITY, a corporation, and DEERE & COMPANY, a corporation,
Defendants.
} Civil Action No. 12538-2

TRANSCRIPT OF PROCEEDINGS

On Wednesday, May 2, 1962, the above-entitled cause came on for hearing before the Honorable FLOYD R. GIBSON, one of the Judges of said court, at Kansas City, Missouri.

The Plaintiffs were represented by their counsel, Messrs. Claude A. Fishburn and Orville O. Gold.

The Defendants were represented by their counsel, Gibson, Ochsner, Harlan, Kinney & Morris, by Mr. S. Tom Morris, and Scofield, Kokjer, Scofield & Lowe, by Thomas E. Scofield.

The following proceedings were had and entered of record:

* * *

---

*Refers to page of the typewritten transcript of proceedings.

[42] Mr. Fishburn: Now at this time plaintiff has about a 20-minute film showing these plows in operation, the background, the history, the reason for developing this type of plowing.

* * *

[43] Mr. Morris: Might I inquire what the subject matter of the film is?

Mr. Fishburn: You have seen it, Mr. Morris, part of it. It is the subject of the saving of the soil and is part of that film down in Arkansas and a few other instances of the rigid clamp and the spring clamp both.

Mr. Morris: It might be helpful to the Court, might be interesting.

The Court: Very well.

* * *

[44] (Film shown.)

We are ready to start our case, Your Honor.

---

## PLAINTIFFS' CASE

CHARLES THEODORE PARKER, called as a witness on behalf of the plaintiffs, was duly sworn and testified as follows:

Direct Examination by Mr. Gold.

Q. Will you give your name and address. A. Charles Theodore Parker, 2434 12th Street, Moline, Illinois.

Q. By whom are you employed? A. Deere & Company.

Q. Is that the Deere & Company who have the office in [45] Moline, Illinois? A. Yes.

Q. That would be the parent company, we might say? A. Yes.

Q. That is now a corporation of Delaware, is it not? A. Yes.

Q. Your employer is the wholly—owns all of the stock of the John Deere Company of Kansas City? A. Yes.

Q. Is your employment full time employment? A. It is.

Q. What is your position? A. General patent attorney.

Q. What are your duties? A. Well, I am the manager of the patent department and have charge of matters pertaining to the patents, trademarks and copyrights.

Q. Are you familiar with the operations of Deere & Company? A. Generally.

Q. Are you familiar with the product that Deere & Company manufactures and sells? A. Yes.

Q. Are you an officer of the company? A. No.

Q. You say you are a patent attorney. You are an attorney [46] at law, are you not? A. Yes.

Q. Registered to practice before the Patent Office? A. Yes.

Q. Do you receive your salary from Deere & Company? A. Yes.

Q. Do any of the branches or subsidiaries of Deere & Company have a patent department? A. No.

Q. Your patent department serves all of the branches or subsidiaries as to any patent matters they might have? A. Yes.

Q. Where are plows manufactured by the Deere & Company? A. Which kind of plows?

Q. The chisel type plows. A. John Deere Des Moines Works, Des Moines, Iowa.

Q. That is a manufacturing plant of the parent company? A. Yes.

Q. At the time—well, say in the years 1953 and 1954, how was the Des Moines Works connected with Deere & Company? A. It was owned by a subsidiary, wholly owned by Deere & Company. The name of it was Deere Manufacturing Company.

Q. That was an Iowa corporation? A. Yes.

Q. And the plant itself was owned by the Iowa corporation [47] and the Iowa corporation was a wholly-owned subsidiary of Deere & Company? A. Right.

Q. Approximately how many employees do you have in your patent department? A. 11.

Q. Can you give us the categories of their work? A. Well, there are five attorneys, three draftsmen, and three girls.

Q. And when you say there are five attorneys, are those each lawyers? A. Yes, they are all admitted to the bar.

Q. And are they all admitted to practice before the United States Patent Office? A. Yes.

Q. Are the attorneys in your department on a full time employment? A. Yes. Pardon me, our youngest attorney has passed the bar examination, but he is not—I don't believe—I don't know just what date he will be admitted, but it is just a little technicality there.

Q. At the times that we are going to have reference to relative to some correspondence, any of the attorneys that would have signed the correspondence would have been lawyers? [48] A. That is right, they are attorneys.

Q. What are the duties of your attorneys in your office? A. Well, in the first place, they should study every new implement that we design or new improvement in our—the implements in our line to be sure that they do not infringe other people's patents. We consider that the most important duty. They should also investigate each of the new implements or new improvements in old implements to see if they contain patentable subject matter that we might obtain some patent protection on. Those are the two main duties of our attorneys.

Q. Do they visit your various manufacturing plants? A. Yes.

Q. And engineering departments? A. Yes.

Q. And is that one manner in which they keep advised of new designs and new equipment? A. Yes, they visit plants and they sometimes go out in the field to see implements perform, and we correspond with the engineers by mail quite a bit. They send us drawings, photographs.

Q. Any new designs that might be devised by a manufacturing plant would be sent to your department for consideration? A. Yes.

Q. I understand that your department also applies for the [49] patents that you might be able to obtain on your products? A. Yes.

Q. Do you also make patent searches to see whether or not a device was novel and patentable, as well as infringement searches? A. That is right.

Q. Where would those searches be made? A. In our office we have a library of all farm implement patents and patents relating to tractors and internal combustion engines of various kinds and industrial line of earth moving equipment.

Q. You take the official Patent Office Gazette? A. Yes.

Q. That is a publication by United States Patent Office, is it not? A. Yes.

Q. Is this all of the patents that issue each week, is that correct? A. Yes.

Q. Does one of your employees go through the Patent Office Gazette and pick out the patents that you might be interested in having in your library? A. Yes. We order two copies of each one, one for our library and one for the engineers in the factory that [50] is most closely associated with that type of implement.

Q. And the plant that would be building plows, particularly chisel plows, would have a duplicate of your portion of your library and patent copies of patents relating to chisel plows? A. Yes.

Q. Does the manufacturing plant maintain a library of copies of patents? A. Yes.

Q. So they are always available to the engineers? A. They keep the copies that we send them and in some order, in books or boxes.

Q. And they are always available to the engineers in the plant? A. Yes.

Q. Do you supervise the making of searches? A. Yes.

Q. How long have you been head of the patent department of Deere and Company? A. 15 years next month.

Q. And what were your duties prior to the time you became the manager? A. I was assistant manager.

Q. And how long have you been with Deere & Company in their patent department? [51] A. 26 years.

Q. Do you prosecute applications for patents yourself for the company? A. Yes.

Q. When you file an application for a patent in the Patent Office, what is the procedure in the Patent Office, do you know? A. Well, a patent application is given a number and assigned to a certain division of the Patent Office that handles that type of invention, and assigned to one of the examiners; there are several examiners in each division. The examiner makes his own search and lists the number of patents that he finds that are most pertinent. He then—

Q. Just a minute, Mr. Parker. Of course the application may lay there for some time before it reaches its turn for examination, is that correct? A. Yes. After it is given the serial number it probably is there anywhere from six months to more than a year at the present time. It used to be even longer.

Q. Then when the examiner reaches the application for action he would first read the application, would he not? A. He would read it, get an understanding of what the invention is, look at the drawings, and then he would [52] make his search.

Q. And where would he make this search? A. In the patent files of the Patent Office. He probably has a stack of patents of his own that apply to his particular sub-class of inventions.

Q. Each division has a large number of cases with what they call shoes of patents, do they not? A. Yes.

Q. Those patents which relate to the art they are handling? A. That is right.

Q. And that art would be classified and sub-classified so as to aid in finding it? A. Yes.

Q. Does the examiner search through many patents when he makes his search? A. Yes, I would say several hundred.

Q. Ordinarily even though he searched through several hundred how many might he cite in an action? A. Oh, anywhere from one to perhaps a dozen or so.

Q. But he would have considered all those he searched, wouldn't he, the several hundred? A. Yes.

Q. If he found two or three patents that were similar as far as being applied to the application he was searching, he would probably only cite one of those [53] similar patents, would he not? A. That might be true. I don't know whether I would say probably. He usually cites more than one, cites several. He would only cite one if it showed exactly what you were claiming.

Q. But he wouldn't cite a cumulative group of patents all for the same purpose of showing one element of the claim, or something like that, would he? A. He would cite enough of them to be representative. It would depend on how the element is used in combination with other elements as to how pertinent the patent is.

Q. Did you have some patent attorneys in your department in 1953 and '54 that worked particularly with the Des Moines plant? A. Yes.

Q. Could you give me their names? A. Roger C. Johnson and William A. Murray.

Mr. Morris: If you are searching for that file of correspondence, Mr. Gold, here is the original file in chronological order.

Mr. Gold: Thank you. That is fine.

Your Honor, we have different exhibits here. The defendant has identified a number of them and no need of having duplications. Since they have a number [54] on them I am going to use some of the defendants' exhibits.

The Court: I assume that is agreeable with defendant?

Mr. Morris: Entirely satisfactory. We had numbered them in anticipation of use in our case, and one number is sufficient.

Q. (By Mr. Gold) Mr. Parker, I have handed you a number of papers that have been identified, I believe, or have identification number of Defendants' Exhibit No. 32, is that correct? A. Yes.

Q. Do you recognize those papers? A. Yes.

Q. That is a group of papers that you produced at the time of taking your deposition in Moline, Illinois, about March 27th, is that correct? A. Yes.

Q. March 27, 1962. Can you turn to those papers and tell me what is the first item in the group. A. The first item is a letter to the Deere & Company patent department, addressed to my attention, from E. C. Bopf, B-o-p-f, the chief product engineer of our John Deere Des Moines Works. This letter explains that his department is in the process of redesigning [55] a tool carrier and proposing to offer as optional equipment a flat spring standard. It goes on to describe it.

* * *

[56] Q. (By Mr. Gold) Mr. Parker, that letter referred to "a flat spring standard 1 X 2 in cross section identical to that which Graham-Hoeme furnishes as regular equipment." When they use the word standard, is that the same as what we have been referring to as shanks? A. Yes, that is just the shank, the 1 X 2-inch curved shank that is supported on a frame at the upper end and carries the tool at the lower end.

Q. This is smaller than one of the others, but this curved part back here, that is what you refer to? A. That is the shank, yes.

Q. Either as standard or shank? The words are equivalent? A. Yes.

Q. I believe that that letter referred to a drawing, did [57] it not? A. Yes, XCA-318.

Mr. Gold: Your Honor, a similar situation exists relative to drawings. The defendant had the originals, we had copies. We are going to use theirs and use their identifications.

Q. (By Mr. Gold) I hand you two drawings that have been marked Defendants' Exhibits 33-A and 33-B. Do you recognize those drawings? A. Yes.

Q. Were those the drawings that were attached to the letter that you have been referring to, the first letter in the Defendants' Exhibit 32? A. Yes. These drawings showed their first attempt to design a spring clamp.

Q. Can you tell me generally the difference between the drawings, Defendants' Exhibit 33-A and 33-B? A. 33-A is the welded assembly of the fixed member of the clamp element. It is made up of several welded plates at angles, welded together.

33-B is an assembly drawing, showing other parts of the clamp and showing how the flat spring standard is secured to the clamp.

Q. In other words, Defendants' Exhibit 33-A would be a detail dimensional drawing of the one fixed piece, is [58] that it? A. Yes.

Q. Makes up a part of the assembly that is shown in Defendants' Exhibit 33-B? A. Yes.

Q. What happened after you received the letter and drawings from Mr. Bopf? A. Well, we made an infringement search and we were particularly warned by Mr. Bopf's statement that this was similar to the clamp that Graham-Hoeme furnishes. We always ask our engineers to let us know if they know of anything that is similar because that is what we pay particular attention to, to determine whether there is any infringement or not.

Now, after making the search we found that the 798 patent, now in litigation, was—while this was not a copy of it, it did have the elements closely enough to what was claimed that we decided that it was an infringement of the 798 patent and we told the engineers of that fact. Later a letter.

Q. Now, this device that was shown in those drawings, Defendants' Exhibit 33-A and 33-B, was the forerunner of the spring clamp later called the 650 series? A. Yes, 650. This clamp they built up one or two of them before we had a chance to tell them about the [59] infringement, the likelihood of infringement, and they tested it and that is as far as they went with this one.

Q. But that was the forerunner of this clamp here that I am now holding up? Can you see it, Mr. Parker? A. I believe that is right. That looks like the 650.

Mr. Gold: And this clamp has been identified, in accordance with the stipulation, Your Honor, as Plaintiffs' Exhibit I.

The Court: That drawing is Defendants' Exhibit 33—

Mr. Gold: 33-A and 33-B, sir. There are two drawings. The letters, group of letters, are Defendants' Exhibit 32.

Q. (By Mr. Gold) Mr. Parker, was there a letter written to the Des Moines Works giving the opinion of your patent department? A. Yes.

Q. And is that letter in Defendants' Exhibit 32? A. Yes. That is the next letter that is in the Exhibit 32.

* * *

[60] The Court: We will be in recess until 2 o'clock.
(Noon recess.)

[61] AFTERNOON SESSION, WEDNESDAY, MAY 2, 1962

---

CHARLES THEODORE PARKER, resumed the stand and testified further as follows:

Direct Examination (Continued) by Mr. Gold.

Q. Mr. Parker, I believe at the time we recessed for noon you were referring to a reply that was made by your office to Mr. Bopf. Is that correct? A. Yes.

Q. Will you identify the letter by date and also the material that is attached to it. A. October 23, 1953, from Roger C. Johnson, patent attorney, to E. C. Bopf. He attached to it a search report.

Q. Then there were four pages went with that letter, or that letter was two pages and two pages of the report? A. Yes.

Q. I believe on the letter there is a reference number, is there not? A. Reference to the Graham patent.

Q. No, I mean the reference number E-2518-J. To what does that number refer? A. That refers to a file that was opened at the time we first heard about this particular machine. When a [62] factory starts work on designing a machine or approving it, we start an "E" file; "E" probably stands for experimental.

Q. But that number didn't appear on the drawings, did it, sir? A. Oh, no, that is just the patent department reference number.

Q. And I believe you stated this morning that in that letter you advised Mr. Bopf that the structure shown in the drawing, Defendants' Exhibits 33-A and 33-B, would infringe the Graham 798 patent, is that correct? A. Yes.

Q. Were any pencil drawings returned to Mr. Bopf with that letter? A. Yes. He sent us two copies of each drawing and Mr. Johnson marked up drawings in a couple of places and used them to illustrate his opinion.

Q. I now hand you two drawings which have been marked for identification Defendants' Exhibits 34-A and 34-B. Would those be the drawings that were attached to Mr. Johnson's reply to Mr. Bopf? A. Yes.

Q. Will you tell us what would be different in these drawings than the drawings, Defendants' Exhibit 33-A and 33-B? [63] A. In 34-A there are some green underline marks and a few shading marks on this top here marked in green.

Q. When you say the shading marks marked in green, that would be the portions in the upper figure that would be to the right of that figure? A. Yes.

Q. And the parts marked in green on the other figures would be lower surfaces of those same portions? A. That is right.

Q. Now, I am holding Defendants' Exhibit 34-B up here and you have Defendants' Exhibit 33-B before you. Can you point out the differences in those drawings? A. Well, this in brown is illustrated—this brown crayon illustrated a pipe spacer that—the purpose of which—well, the purpose of all these marks was to show what appeared to be the—what the patent claims emphasized, and what distinguished the patent claims mainly from the prior art, and so Mr. Johnson was showing him what seemed to be the Graham invention there and told them that that is what they would have to avoid in order not to copy Graham's invention. The pipe spacer was just one suggestion. He wasn't trying to design something practical, but to illustrate how the design could be revised so as not to use the Graham invention.

Q. Actually what he was doing was trying to make some [64] arrangement whereby the plate member above the shank would not contact the fixed member to form a stop, is that correct? A. That is right. The patent claims emphasized the coming together of two surfaces on the hinged member on the one hand and the fixed member of the clamp on the other hand, and those two surfaces, the

description of those in the claim took up several lines, which indicated that that was one of the important parts of the claim.

Q. So Mr. Johnson was suggesting the variation in the stop, but it would still serve the same function, is that correct? A. Well, of course all spring clamps have to have a stop, and when the spring brings the parts together all clamps in the prior art and any new clamp that is designed has to stop it in a definite location so that the bottom point of the tool, the lower end of the shank, will be in the proper position relative to the ground. The pipe spacer was one way of setting a limit to the action of the pivoted clamp member in a different manner than is described in the claim.

Q. The two abutting faces in the Graham 798 patent structure were also intended to position the tool in the right angle according to the ground it was plowing? A. Yes.

[65] Q. Am I correct in saying that you want the correct angle to get what they call suction? A. That is right, suction or penetration of the tool into the ground.

Q. That suction would be so that as you are plowing the tool will tend to stay in the ground rather than be pushed back up, is that right? A. Yes. That is mainly the case of the sweep rather than the spike or the chisel. The sweep must go under the ground at an angle in order that it will penetrate.

Q. When you refer to a sweep you are referring to a tool like this (indicating)? A. That is right. The point of the sweep is slightly higher than the rear part of it or it would never go into the ground, it would just slide along the surface.

Q. Now, will you turn to the next letter in Defendants' Exhibit 32 and tell us what that is. A. It is just a letter of transmittal from R. C. Johnson to E. C. Bopf, dated November 4, 1953. It is transmitting some drawings of prior art patents, three foreign patents.

Q. That might be said to be an extension or further citation of patents in his search report? A. Yes. These are the three foreign patents that were [66] cited in the Graham patent application that matured into patent 798.

Q. Now will you turn to the next letter and tell us what that is. A. That is an order from our patent department to the United States Patent Office in Washington, asking or ordering a photostat copy of the complete file in the 798 Graham patent.

Q. And that was dated November 9, 1953? A. November 9, 1953.

Q. You were ordering what would be called a file wrapper? A. File wrapper, yes.

Q. Now turn to the next letter, please, and tell us what that is. A. It is a letter dated November 10, 1953, from Mr. Bopf to Mr. Johnson again, sending a print of another drawing, CL-134-N, and in this drawing he shows a new design that has been made with the idea of avoiding the use of Mr. Graham's invention. He asks the opinion of the patent department, of Mr. Johnson, as to whether that was an infringement of the Graham patent. The same letter also transmits another drawing, CL-135-N, which is another print of the same drawing, I believe, except that he has marked in in pencil an adjustable stop device by which the angle of penetration of a sweep [67] can be adjusted.

Q. Now I show you drawing that has been marked Defendants' Exhibit 38. Is that the first drawing that you had reference to that was attached to the letter of Mr. Bopf of November 10, 1953? A. Yes.

Q. I now show you a drawing which has been marked for identification Defendants' Exhibit 39. Is that the other drawing that you had reference to? A. Yes, that is XCL-35, showing in pencil this adjustable stop member.

Q. That adjustable stop is a bolt, is it not? A. Yes. He has used a bolt for that stop and his question there was whether perhaps that would constitute invention on the part of our engineers. He says that if Mr. Johnson sees fit to file a patent application on that variation or that variation of the structure, that Dwight Hunter is the inventor of that particular detail.

Q. Now, what is the next letter in Defendants' Exhibit 32? A. It is a letter from Roger Johnson to E. C. Bopf, dated November 13, 1953, telling him that these two prints were sent, that we just received, were in his opinion

not infringements of the Graham 798 patent and that we could—he felt that we could safely adopt [68] that design.

Q. He then said that the patent ability of those designs was rather doubtful, did he not? A. Yes. It is a very specific little detail there that he wasn't sure whether we could get a patent on it or not.

Q. Will you read the last paragraph of the letter of November 13, 1953, read it aloud, please. A. "However, it might, nevertheless, be advisable to file a patent application so that, if allowed, it could be used to convince Graham that our design is different from his."

Q. Do you subscribe to the idea that if you got a patent on that structure that that would indicate it would not infringe the earlier patent?

Mr. Morris: Your Honor, I believe that is a matter of law and calls for opinion as to a question of law, which is not proper examination of this witness.

The Court: Yes, I think it is asking for a legal conclusion. Sustained.

Q. (By Mr. Gold) Was there a memorandum attached to the letter of November 13, 1953? A. I don't see any evidence that there was. The letter doesn't mention any. The next [illegible]n the file is a [69] memorandum that is dated December 1, 1953.

Q. That is a 2-page memorandum? A. Yes, but it would not seem that that went with this letter of November 15th.

Q. And the date on that memorandum is on the second page under Mr. Johnson's name? A. Yes, December 1st.

Q. Generally what is the subject of the memorandum? A. The subject is the Graham patent 798, and it was evidently written soon after receiving the file history of the Graham patent, after Mr. Johnson studied that file history, which is rather a customary way to obtain an interpretation of what the inventor considered his invention, and at the time he applied for the patent.

Q. Now, what is the next letter in the Defendants' Exhibit 32? Would that be the letter of transmittal of the memorandum? A. That is the one that transmitted the memorandum I do believe. It doesn't say so, but I believe

that a copy of the memorandum was sent along with this letter in which Mr. Johnson inquires about some photographs that show a spring clamp that was very—that appeared to be the same as the original welded construction shown in the first drawing in this group of exhibits.

[70] Q. That would be like shown in the drawings Defendants' Exhibits 33-A and 33-B, is that correct? A. Yes, I think that is right. In this letter—he had just seen these photographs come through from our advertising department and he wanted to know whether they were following that design because it appeared to be the design that he had told our engineers was an infringement. These photographs were taken just to preserve the design in the file, but they had already abandoned the use of them.

Q. It wouldn't have been very practical to have made the device out of fabricated steel, would it? You would make it out of a casting anyway, would you not? A. Well, casting is the way that type clamp has always been made, so the weld design was for—was because that was easier to make a test model.

Q. What was the nature of the next letter in the group, Defendants' Exhibit 32? A. I might just correct my last—one of my last statements. This letter of December 1st does mention that it is transmitting a copy of the memorandum. Then the next letter is a letter from Mr. Bopf to Roger Johnson, dated December 8, '53, explaining that the spring clamps that are shown in these photographs are not the design we are putting into production. This [71] letter also is a letter of transmittal of the print, CL-136.

Q. I believe there is a pencil notation on the letter of December 8, 1953. Do you note those notations? A. Yes. Mr. Bopf is referring to a conclusion of Mr. Johnson's. This pencil notation is in my handwriting. I put it in there. It reads, "In the memo of 12-1," in other words, I was—

Q. You put it in there for your own identification? A. My own identification as to where I can find this conclusion, because the conclusion was not in Johnson's letter of December 1st. So when I couldn't find it there, I read the

memorandum and found it and made this note so I could refer to it easily again if I ever wanted to.

Q. I now show you a drawing marked for identification Defendants' Exhibit 41. Is that the drawing that accompanied Mr. Bopf's letter of December 8, 1953? A. Yes, that is the one.

Q. This drawing has some pencil marks and letters on it. That has been added subsequently, has it not? A. That was during Mr. Hunter's deposition last month.

Q. Were there any other drawings sent to you with that letter of December 8, 1953? A. No, I think not.

[72] Q. What is the next letter in Defendants' Exhibit 32? A. Letter from Mr. Johnson to Mr. Bopf, dated December 11th. It is an answer to Mr. Bopf's letter of December 8th.

Q. He also commented on the possibility of filing applications for patent on Mr. Hunter's structure? A. Yes. He refers to the fact that this XCL-136 is their proposed production design, and notes that there is no adjustable stop on this design, and asks Mr. Bopf if he thinks it would be worth applying for a patent.

Q. On the second page of that letter I believe there is a pencil notation. In whose handwriting is that? A. That is mine.

Q. Now will you turn to the next letter in Defendants' Exhibit 32 and tell us what that is. A. It is a letter dated December 16th from Mr. Bopf to Mr. Johnson.

Q. That letter also has a pencil notation on it, I believe. Is that your identification? A. That is right. In this letter Mr. Bopf is suggesting what might be considered a patentable improvement in this design over any of the prior art.

Q. Will you read the third sentence in the first paragraph of that letter. A. "We know no advantage in this design insofar as it [73] differs from that shown in the Graham patent 2,627,798 except that it avoids the claims of this patent." Then he goes on to explain what might be considered an advantage, though, which is somewhat contradiction of that statement.

Q. Now, will you turn to the next letter, please, and tell us what that is. A. A letter from Roger Johnson to E. C. Bopf, dated December 30th, in which Mr. Johnson decides that the advantage stated by Mr. Bopf, that this particular design of stop lug could be made more accurately than any of the previous designs, or then the prior art, that that advantage would make it worth while to file a patent application and see if we couldn't get a claim on it. So he tells Mr. Bopf he has decided to file a patent application and asked for some other prints, detailed parts, to help him make up the patent copies.

Q. Now, will you turn to the next letter and tell us what that is. A. A letter from Bopf to Johnson, dated January 4th.

Q. Is that a letter of transmittal of some detail drawings? A. And states that he presumes we will show both the production drawing with the fixed stop lug and also the other modification in which an adjustable stop plug is [74] used, show those in the same application and attempt to get some claims on both embodiments.

Q. Mr. Parker, I show you a drawing that has been marked Defendants' Exhibit 42-A. Is that one of the drawings that was sent to you in Mr. Popf's letter of January 4, 1954? A. Well, it could have been. I can't substantiate that. It is a detailed part of the clamp.

Q. Can you tell us what part of the clamp is shown on that drawing? A. That is the fixed half of the clamp on the tool bar.

Q. Can you give us the number here, Deere & Company number of the drawing? A. Drawing number is C-21-N.

Q. That is in what we might call the name box at the lower right-hand corner of the drawing? A. Yes.

The Court: What exhibit number is that?

Mr. Gold: Defendants' Exhibit 42-A, sir.

Q. (By Mr. Gold) Mr. Parker, I have a clamp here. It has a tag on it, marked Defendants' Exhibit 26-A. Can you point to the part that is shown in the drawing, Defendants' Exhibit 42-A? [75] A. That is this part here (indicating).

Q. That is the part that is below the square bar? A. Yes, below the square bar through which the other parts extend. It is a box-like casting.

Q. Now, this clamp has a cap member over the square bar, does it not? A. Yes.

Q. That is fastened to the lower part by bolts? A. Yes.

Q. And the cap, the bolts in the lower member that you referred to could all be called the fixed member? A. Yes, that is a fixed member as contrasted with this pivoted member that is attached to the shank.

Q. The square bar would be part of the frame, would it not? A. Yes.

Q. Now I show you the drawing that has been marked for identification Defendants' Exhibit 42-B. Can you tell us what that is? A. That is the pivot part of the clamp. That is the part to which the shank is connected.

Q. Can you point out on this clamp, Defendants' Exhibit 26-A, that pivoted part? A. Yes, right here. It is this part that is pivoted—here is the back of it here.

* * *

[76] The Court: Which is the pivoted part?

A. It is pivoted here to the fixed member and at the front end it is bolted to the front end of this tool shank. There is the front end of the pivoted member right there (indicating).

Q. (By Mr. Gold) Would that be a plate lying on the top of the shank? A. Yes.

* * *

Q. (By Mr. Gold) Now I show you drawing, Defendants' Exhibit 42-C. Can you tell what that is? A. Well, that is the casting that the coil spring rests upon.

Q. Might be said to be like a washer at the lower end of the coil spring? A. Yes.

Q. And I have another drawing, Defendants' Exhibit 42-D. Is that the washer at the upper end of the spring? A. Yes, it is called cap spring.

[77] Q. Defendants' Exhibit 42-E, is that the coil spring? A. That is the coil spring itself, yes.

Q. And Defendants' Exhibit 42-F, what is that? A. U-bolt over which the springs are mounted.

Q. You might call it a spring bolt? A. Yes. The drawing calls it a clip, but I would call it a U-bolt myself.

Q. Now I have a drawing, Defendants' Exhibit 42-G. Is that the shank? A. That is the shank or what our engineers refer to as the flat spring standard, curved shank the tool is mounted on.

Q. Like the one I held up earlier that had the curved member? A. Yes.

Q. On which the tool was fastened to the lower end of? A. Yes.

Q. Now I have Defendants' Exhibit 42-H. Will you tell me what that is. A. That is a retainer clip. I could describe it better if I saw the machine.

Q. Here is Defendants' Exhibit 42-I. Can you tell me what that is? A. It is just a pivot pin drawing.

Q. Mr. Parker, we have now dismantled the clamp, [78] Defendants' Exhibit 26-A, and I would like for you to step over to the table and help us identify each of the parts according to how they correspond with the numbers of the drawings that we have talked about. A. Defendants' Exhibit 42-A shows the lower casting in the fixed part of the clamp, and that is this part (indicating).

Q. That is this large casting under the square bar? A. Yes.

Q. And that casting is held to the square frame bar or tool bar by the top cap and two bolts, is that correct? A. That is right.

The Court: Is that a single piece casting there?

Mr. Gold: This lower part is, sir. The upper part is a separate casting, and the two bolts, and this is the frame member.

Q. (By Mr. Gold) Mr. Parker, awhile ago we had difficulty showing the fixed member or plate. Now, holding the fixed member inverted, does that member go inside of the channel? A. Yes, in there like that (indicating), pivoted by this pivot pin, so it is pivoted to the fixed part (demonstrating).

Q. Now I have Defendants' Exhibit 42-G, which you said [79] was the shank. A. This is the shank with most of it cut off. This is just the top part of the shank shown here where it bolts to the pivoted member of the clamp. All the bottom curved part has been cut off.

The Court: What is that called, the flat spring standard?

A. Yes.

Q. (By Mr. Gold) And we also refer to it as the shank. The part we have here is primarily the part in the clamp, is it not? A. That is right.

The Court: What is the part called that fits into the lower casting there that pivots?

A. Well, I call it the pivoted portion of the shank—pivoted portion of the clamp.

The Court: That is in drawing 42-B?

Mr. Morris: That is correct, Your Honor.

A. The drawing is called the hinge standard.

Q. (By Mr. Gold) And that is on Defendants' Exhibit 42-B? A. 42-B.

The Court: You called that first the pivoted part of the shank or the clamp.

A. Of the clamp. I made a mistake there.

[80] Mr. Morris: From time to time that part and a similar part of other devices may be called a hinge member, a fulcrum plate, a pivoted member or a shank attaching member. Those four names are used from time to time in various phases of this matter.

Q. (By Mr. Gold) I show you Defendants' Exhibit 42-H. Can you show us that part? A. Retainer clip, that is this (indicating).

Q. Now can you tell us where that clip is fastened? A. The retainer clip is mounted on the same bolt that holds the upper end of the tool shank to the pivoted member of the clamp. The retainer clip is just a small angle member that holds the U-bolt that is connected to—the two legs of which go up through the two coil springs to the connection at the top.

Q. U-bolt is shown on which drawing? A. Defendants' Exhibit 42-F.

Q. Now, would the U-bolt go under the shank at the end and under the clip as I am holding it now? A. Under the clip, yes. The clip turns down to prevent the U-bolt from sliding away from the front end of the shank.

Q. And that would be at the forward end of the shank or remote from the pivot hole, is that correct? A. Yes.

[81] Q. Now, you referred to the member I hold in my hand now—which drawing is that shown on? A. 42-C.

Q. And you call that what? A. That is Defendants' Exhibit 42-C. That is called the base for the spring.

Q. I now refer to drawing, Defendants' Exhibit 42-B, and what is shown on that?

The Court: Did you say that is the base for the spring?

A. Yes. The bottom end of the spring rests on this base and the surface of the base is shaped so that it fits the end of the spring which curves around here like this (demonstrating).

Q. Mr. Parker, maybe it might be helpful if we would put the base on the fixed member.

The Court: Was that referred to as a washer before?

A. That is the lower or base washer, Your Honor.

Q. (By Mr. Gold) Now, do I have the lower base washer resting on the fixed member with the spring on the washer in about its proper position? A. Yes.

Q. Now, I notice on the base washer there are two depending rounded portions on each side of the hole, and then [82] laterally to that there is a lug that extends down. Where would that lug be positioned when it is mounted on the clip? A. The position behind the spring, which is in the direction toward the pivot. It bears on the top of the fixed part of the clamp for the purpose of preventing the spring from tipping backwards in the operation.

Q. Now, the spring is shown on which drawing, please? A. Defendants' Exhibit 42-E.

Q. Now, in order for the Court to visualize, maybe we can put this in here. Now then, we had another drawing of a pin, I believe you said. That was this drawing? A. Defendants' Exhibit 42-I. That is the pivot pin, it is inserted in this hole through the lower—

Q. That pin goes through the hole in this link member or pivoted member as we referred to it also? A. Yes.

Q. That series of drawings that we have been referring to were the prints that were attached to Mr. Bopf's letter of January 4, 1954, is that correct? A. I presume that is correct, yes.

Q. Now, will you turn to the next letter in Defendants' Exhibit 32 and tell what that is. A. Letter dated January 28, 1954, from Mr. Johnson to Mr. Bopf, transmitting the patent application which was [83] drawn on our design which we have been discussing.

Q. Now, the next sheet in Defendants' Exhibit 32. A. The reason for transmitting it, the application, was to have it signed by the inventor.

The next sheet is a record of invention, we call it, which gives the various dates on which the invention was conceived and first drawn up in a sketch, first written up in a description, to whom it was first explained, and the description of it, date of the first field test and the first photographs and the first model, the first full sized device.

Now, this is a form that we send along with each patent application and ask the inventor to fill it out, so that in case we ever need to know these various dates in the future we will have them all on one piece of paper.

Q. You did file an application for a patent on Mr. Hunter's design? A. Yes.

Q. Any patent issued on that application? A. Yes. It was No. 2,777,378.

Q. Mr. Parker, I hand you now a soft copy of the Hunter patent which has been marked as Defendants' Exhibit 44. Is that the patent that matured from the application that you filed? [84] A. Yes.

Q. Now, will you turn to the next item in the Defendants' Exhibit 32 and tell what that is. A. It is a letter of transmittal from Mr. Bopf to Mr. Johnson dated January 29th, returning the application duly executed.

Q. Tell us what is the next letter in Defendants' Exhibit 32, Mr. Parker. A. Letter from Mr. Johnson to the Commissioner of Patents in Washington transmitting the application, patent application of Mr. Hunter.

Q. And the next item? A. The next item is a letter from Mr. Johnson to Mr. Kirby, the cashier of Deere & Company, asking for a check for $33 to send to the Commissioner of Patents with the application.

Q. And the next item? A. The next letter is a copy of Mr. Johnson's letter to the Commissioner of Patents. We send a copy of that letter to go along with the assignment of the invention and the application to Deere & Company, because the Patent Office requires a separate letter of transmittal with every paper that is filed in the Patent Office.

The next is a receipt—

* * *

[85] A. This is a receipt by the Patent Office of the assignment. Yes, it is of the assignment itself.

Q. (By Mr. Gold) And the next item? A. It is a letter dated February 12th from Mr. Johnson to Mr. Bopf, transmitting a copy of the Hunter patent application.

Q. The next item I believe was included in the group that we made copies of at the deposition, and in that deposition was identified as Parker Exhibit 2-J, is that correct? A. Yes.

Q. Tell us what that is. A. This is a memorandum that was made after one of the executives of the Jeoffroy Manufacturing Company had, in a conversation with Mr. Ralph Mason, one of our executives, indicated that his attorney could tell us why he thinks that our clamp construction infringes this Graham patent. This is rather a mystery because we have never been able to find out who that attorney was and the only one that it could be is Mr. Morris [86] here, but he didn't say anything, so I think it may have just been Mr. Jeoffroy's opinion rather than some attorney's opinion. But the purpose of the memorandum was—I asked Mr. Johnson to review all of his notes and opinions as to validity and see if he sees any reason to change his mind as to the question of infringement. He studied the matter over from start to finish and his conclusion was that our design of clamp did not infringe the Graham patent, therefore he thought it must be some other patent that was pos-

sibly referred to, and such as the Graham No. 811 patent, which was held valid and infringed in the Jeoffroy suit, the suit against Jeoffroy. So then he studied the 811 patent again to review his analysis, and he decides that that is not infringed either. So we just decided that there must be some mistake either as to the patent or the structure that was rumored to infringe this Graham patent.

Q. He didn't say in that memorandum that he had decided there must be some mistake there? A. No, I said that. Let's see, I don't know. Maybe he did. I was just giving that as my opinion, based on the recollection of the facts at the time. We were so confident of that opinion that we didn't even try to follow up to find out who it was that made the [87] statement in the first place, if there was any. You see, this came third-or fourth-hand, somebody told Jeoffroy in talking with Ralph Mason who told Mr. Bopf about it, and Mr. Bopf just mentioned it to me in a conversation, and—well, I was always very much interested in avoiding other people's inventions, we don't want to infringe them, and their patents, so if there is ever any doubt about it we give it our most careful attention.

Q. And here you were indicating in this memorandum you were relying entirely on the difference in the stop contacting faces to distinguish and see that there was no infringement, is that right? A. Well, not entirely. There is over a page of opinion here. It might be difficult to sum it up in just a few words, but the paper is in evidence here, so unless you ask me to I will just let it go at that.

Q. Regardless of the memorandum, relating to the Graham 811 at the top? A. Yes, the bottom two paragraphs.

Q. Turn to the next item in Exhibit No. 32 and tell us what that is. A. It is a letter dated July 12, 1954, from Roger Johnson to Ed Bopf. At that time we were wondering whether it would be worthwhile to file a Canadian patent [88] application corresponding to this United States Hunter patent application.

Q. And the next letter in Defendants' Exhibit 32? A. Letter from Bopf back to Johnson, dated July 14th.

Q. Also relating to the Hunter application? A. Yes, but he advises filing a Canadian application.

Q. And the next letter in the exhibit? A. That is a letter from Mr. Johnson to Mr. Dawson, the manager of our factory at Welland, Ontario, in which it was customary for us to notify our factory up in Canada as to whether or not we decided to file a patent application in Canada corresponding to each United States patent application. In some cases we did file it and we told them that we were going to, and in other cases we told them why we did not intend to file one and give him an opportunity to suggest a different course of action.

Q. Tell us what the next letter is. Is that just a consent to Mr. Dawson— A. Consent to Mr. Dawson to file the application in Canada.

Q. Dated July 21, 1954? A. Yes.

Q. And the next item? A. The next item is a memorandum from Mr. Johnson, dated [89] July 27, 1955, regarding a telephone call from a Mr. Ray Dowdall of Minneapolis-Moline Company, asking whether or not we had a Canadian patent on this clamp.

Q. And the next letter? A. November 21, 1956, from me to Mr. Kirby, our cashier, asking him for a check to the Commissioner of Patents to pay the final fees on four applications which had been allowed, one of them being the Hunter application on the spring cushioned clamp.

Then we have the receipt from the Patent Office giving us the number of the patent that was to issue, and the date on which it would issue. They sent us that after they received the final fee from us.

Q. The next letter? A. The next letter is dated February 18, 1957, from Mr. Bopf to Mr. Murray.

Q. That is relative to the marking— A. The patent marking.

Q. Of the Hunter patent? A. Yes.

Q. Now we have gone through the letters that related to the design and opinions relative to the Deere 650 spring clamp, is that correct? A. Yes.

Q. Mr. Parker, I show you Defendants' Exhibit 34-A. I [90] believe that is the drawing that you said Mr. Johnson placed some green markings on the surface, is that correct? A. Yes.

Q. I show you assembly drawing, Defendants' Exhibit 33-D. That was the assembly drawing of the original spring clamp that was submitted for opinion, was it not? A. Yes.

Q. There was a plate member over the shank and the plate member was pivoted? A. Yes.

Q. That plate member is designated with the numeral 25? A. Yes. That is the pivoted member that I have referred to before.

Q. And when this pivoted member was urged upwardly by the coil springs, that plate member contacted the face, the lower face of the fixed member and that lower face would be marked green on Defendants' Exhibit 34-A, is that right? A. Yes.

Q. And that served as a stop to position the lower end of the chisel or the tool, so it would have the proper suction? A. Yes, that is right.

Q. And the suggested change that was made actually [91] consisted of what, if you were going to apply it to this drawing, Defendants' Exhibit 34-A? A. Well, it was to move the stop to some other position. This is what we considered covered by the patent, Graham patent, the lower face of the fixed clamp member contacting the face of the pivoted member. So we just moved the stop so that it would not—not only wouldn't contact between those two faces, but it wouldn't even contact between those two members.

Q. You actually cut the end of the plate off a little bit and put a lug on the fixed member so the lug would engage the frame of the shank to form the stop, is that right? A. Yes, put the stop between the top of the tool shank itself and the fixed member.

Q. So that when it was urged upwardly by the spring the forward end of the shank would have the same position as it had when it was used with a structure such as was shown in Defendants' Exhibit 34-A, is that right? A. Well, yes, all spring clamps have stops. We considered this patent just to cover the particular arrangement that was shown in the patent.

Q. So your entire distinction in the opinions you were relying on later was the fact that you cut off the end of this plate, of this hinge member right here so as to [92] expose the upper face of the shank and put a lug on the fixed member to engage that shank? A. Well, that was one of the points of distinction, yes.

Q. Were there any other points of distinction? A. Yes, there was something—there was another limitation in the claim about the stirrup member back of the—

Q. There wasn't such a limitation in Claim 1 of the 798 patent, was there? A. No, perhaps that was in Claim 2.

Q. Claim 2 is not asserted by the plaintiff in this action, is it? A. No, not as against the 650.

Q That is right, as to this structure Claim 2 is not asserted as to this one? A. No.

Q. The lug you placed on the fixed member is the lug at the forward end that I have my finger on, is it not? A. Yes.

Q. And that extends down in front of the hinge member and contacts the end of the shank? A. Yes. It doesn't touch the pivoted member at all.

Q. In making that change you didn't alter the normal position of the shank at all, when it is moved upwardly by the springs and comes to its stopped position, is that right? [93] A. Well, I would say that it is an improvement.

Q. Does it change the position of the shank? A. It changes it in that there isn't the amount of variation that there would be if the two cast faces came together, or that there could be, that is, gauging right on the tool shank itself, which is a piece of smooth steel.

Q. The stop is a cast— A. The stop is a relatively small area which can be made much more accurately than the complete top face of a pivoted member, yes.

Q. Do you machine the stop to an accurate dimension? A. No, I don't believe it is ordinarily necessary. It can be cast accurately enough to—

Q. You don't have any difficulty casting it accurately at all, do you? A. Well, I don't know.

Q. Now, Mr. Parker, after a few years there was another design of clamp submitted to your office, was there not? A. Yes. That was submitted with this letter of April 29, 1958, from Mr. Bopf to Mr. W. A. Murray, of our department.

Q. And some additional drawings were submitted with that letter? [94] A. He sent us a drawing and asked if that avoided infringement of the Graham patent.

Q. If I am not mistaken, weren't there two drawings submitted with the letter, Mr. Parker, and would they be Defendants' Exhibit 45-A and 45-B? A. Yes.

Q. Will you tell us what is shown on those respective exhibits? A. 45-A is a—that is a drawing of the fixed member. Well, it is just half of the fixed member. It is the part on which the springs are mounted in this case, this clamp is for a larger frame beam. It is a hollow—square hollow beam rather than a solid frame, and the fixed part of the clamp is in several parts rather than just two parts as in the 650.

Now, Defendants' Exhibit 45-B is the pivoted member of the clamp.

Q. These are the drawings that were submitted to you for an opinion and this is similar to the structure that later was manufactured under the designation of Deere 100 series spring clamp? A. Yes.

Q. Mr. Parker, I have now placed on the table a clamp that has been identified as Defendants' Exhibit 27-A. That is the commercial product that resulted from the [95] original work and design that was submitted on your drawings, Defendants' Exhibits 45-A and 45-B, after the device was modified? A. Yes, after it was cleared—after we cleared it for production and decided that it would not infringe the patent.

Q. Now, as to the structure shown in Defendants' Exhibit 45-A, you say that shows the forward half of the fixed member. That is the portion on which the springs are sitting? A. Yes.

Q. Now, at the other end, other side of the square tube frame is a part clamped to that forward portion and they together with the bolts make up the fixed member? A. That is right.

Q. There was no change made in the rear portion of the fixed member, was there? A. No change from what?

Q. From what was originally designed, it is not shown on either one of those drawings? A. No, I don't recall that there was.

Q. You were concerned primarily with what was in the forward part of the clamp, weren't you? A. Yes.

Q. Now, when you received those drawings, what was done? [96] Did you give an opinion? A. Yes. We received the drawings with this letter from Mr. Bopf, but he had already modified the drawings in pencil, because he anticipated that we would be concerned with the infringement of the Graham patent the way it stood—the way it was originally drawn, because we had pointed out to him that we should not use the type of stop or even we should not use the type of stop claimed in the drawing, nor should we have a stop between the same two members that were used by Mr. Graham in his design. Therefore, while the stop shown in the drawing was quite different than Mr. Graham's design, it still contacted between the pivoted member of the clamp and the fixed member of the clamp, in a way that could be considered an infringement, and Mr. Bopf recognized that himself and so in his letter he pointed out that he himself had suggested these changes to place the stop between the hinge member of the clamp and the frame bar, rather than between the hinged and fixed members of the clamp.

Q. Did Mr. Murray of your office write an opinion in response to that letter? A. Yes, he wrote an opinion dated the 7th, in answer to Mr. Bopf.

[97] Q. Did he attach a memorandum to that letter? A. Yes, he did.

Q. The memorandum consists of two pages and also a third page listing some other patents, is that right? A. Yes.

Q. Now, referring to Defendants' Exhibit 45-B, the pencil marks that you say were made by Mr. Bopf was to remove a little material from the forward end of this hinge member and place a little material on the intermedi-

ate part, is that right? A. Yes. By so doing he changed the stop members—

Mr. Fishburn: Just a moment. I think the witness should answer the question.

Q. (By Mr. Gold) Now then, that is exactly what was done and in making the clamp that is shown on Defendants' Exhibit 46? A. Yes.

Q. The metal that was removed, according to Mr. Bopf's suggestion, was at the forward end of the hinge member so it would not contact the part of the fixed member under the springs, is that right? A. That is right.

Q. And the metal that was added was added immediately under the box frame so the hinge member would contact the box spring? [98] A. Yes.

Q. This fixed clamp that you refer to is rigidly fastened to the box frame by three bolts, is it not? A. Let's see, I think it is three. Yes.

Q. Two bolts underneath the box frame and one on top? A. Yes.

Q. So that the fixed member is just—when we call it a fixed member, we mean it is tight and remains stationary to the frame? A. Yes.

Q. So your change from what Mr. Murray said would be an infringement was to move the contact between the two faces that were fixed—I mean between a face of the hinge member and a face of this fixed member, to another face of the hinge member and to a part that was fixed to the fixed member? A. That is right, that is what was considered not an infringement.

Q. And your intention in making that change was still to keep the same position of the shank when it was up in its upper or normal position, urged upwardly so the top faces were in contact, was it not? A. Well, yes. All clamps, Mr. Graham's and everybody else's design, have stop members and our point was to not use Mr. Graham's design or anything that would [99] infringe his patent.

Q. And making that change of taking the metal off at the forward end of the hinge member and putting it down under the frame did not change the location of the shank at all when it was in its upper position, isn't that right?

That shank remained the same in both instances? A. Oh, yes.

Q. Mr. Parker, the Patent Office Gazette each week carries notices relative to any patent litigation that is pending or that has been determined in some way, it carries notices of all patent litigation, does it not? A. It is supposed to. I have found there are instances where I haven't seen any notice, but there has been a suit. But that is the way it is supposed to work.

Q. In most instances when a patent suit is filed there is a notice within a few months in the Patent Office Gazette, is that right, sir? A. Yes.

Q. And when there is a decision in any patent litigation, it is usually reported in what they call United States Patent Quarterlies, is it not? A. Yes.

Q. That is a reporter system similar to the Federal Reporter? A. That is right.

[100] Q. Your patent department has received copies of a Patent Quarterly? A. Yes, we subscribe to that.

Q. And the advance sheets? A. Yes.

Q. Do your attorneys read those advance sheets? A. Yes, we all try to read them. I don't say we have time to read all of them, but we would like to.

Q. If you note a decision relative to an agricultural implement, you would probably note it and everyone would read it, would they not? A. We would be more interested in that than we would in any other kind, of course.

Q. You knew about the Graham and Jeoffroy litigation? A. Yes.

Q. In fact, you knew about it back about the time that Mr. Hunter first started working on the design that we have been referring to that accumulated into the 650 suit, is that right? A. Yes, we knew about it almost from the time it started.

Q. And you particularly noted it when the Graham 798 patent was held out as infringed by the Court of Appeals of the Fifth Circuit? A. Yes.

Q. Mr. Parker, when Deere & Company start to be interested [101] in producing some equipment or changing

their equipment, do they have an investigation made in the field, some kind of a survey? A. Usually do.

Q. Are those surveys sent to you? A. No.

Q. You don't receive copies of them? A. No. They are making—well, some of them are not formal surveys. The demand for any particular implement or improvement usually comes in the form of either complaints or suggestions from our customers that they want certain things and they make those to their dealers and the dealers forward them to the branch house and the branch houses forward them on to the factories. Then we have a product research department that follows—several members of that department that follow the conventions, the meetings on various agricultural subjects and go to the experimental stations of the government, the universities, to keep apprised of any new ideas that are coming out and so sometimes a suggestion that we need a certain implement would come from the product research department, sometimes from the sales department.

Q. If it is new equipment of a competitor that is operating in the field, do you have people go out and observe it [102] to find out what it will do? A. Yes, both our engineers and our product research men are always interested in seeing any competitive equipment either on the dealer's floor or in the field.

Q. Do you know what type of chisel plow Deere & Company was selling in South Dakota and Montana prior to the 650 series? A. Yes, we had a number 600 series and a 900 series, which had other forms of springs between the tools and the frame.

Q. Is that spring a coil in the shank itself that we might call a pigtail? A. Yes.

Q. That is the only spring that you would have as far as any spring between the tool and the frame, prior to the 650 series? A. Yes.

Q. Is the term pigtail a proper, well known name describing the type of spring shanks that you were using in your 600 series or 900 series? A. It is one term you can use. I hadn't heard of that particular term until lately, but I presume that the engineers would have known about it.

Q. The shank comes back from the frame and then makes two turns, then comes down to the lower end of the tool [103] it is mounted on? A. Yes.

Q. And the forward end of that shank is fixed tight to the spring by some clamp, there is no spring in the clamp at all? A. Yes.

* * *

Q. (By Mr. Gold) Mr. Parker, when we took the depositions in Moline, we had some surveys produced. Did you receive copies of those surveys? A. Yes.

Q. Did you receive them back at the time they were made? A. No. No, those were surveys made by the product research department, and I hadn't seen them until just recently.

Q. Until about the time of the depositions? A. Yes.

Q. Mr. Hunter brought those with him? A. No, they were found in the product research files.

Q. In Moline? A. In Moline, yes.

Mr. Gold: If Your Honor please, these are the originals of the exhibits that were in the Hunter [104] deposition, Hunter Exhibits 1 and 2.

Q. Mr. Parker, I hand you a document which has been marked for identification as Defendants' Exhibit 30. I believe on that it shows "Hunter Exhibit 1," is that correct? A. Yes.

Q. Can you tell me what that is? A. It is entitled "Tool Carriers Survey" by E. H. Lee, March 1953, Product Research Department copy.

Q. Is that a survey made by the Deere & Company employees for the employees of their subsidiaries? A. Mr. Lee is a Deere & Company employee in the Product Research Department at Moline.

Q. And this document came from the files of the Deere & Company in Moline? A. Yes.

Q. Can you tell us when that survey was made? A. Well, the survey, the trip that was reported by this report was made by Mr. Lee March 9th to 19th, 1953, and he wrote up the report on March 30th of 1953.

Q. I believe the survey shows that he traveled with some other people from the Kansas City branch, is that correct? A. Yes.

Q. Those people—I believe it is Mr. Sheier, Mr. Waln, [105] and Mr. Wilson. Were they employees of Deere & Company or the John Deere Company of Kansas City? A. John Deere Company of Kansas City.

Q. A subsidiary of Deere & Company? A. Yes.

Q. Now, if you will look at the other survey, I believe it has been marked as Defendants' Exhibit 31. Will you tell us when that was made and by whom? A. That is another tool carrier survey made by the same man, Everett H. Lee, in the Product Research Department, was made April 6th to 16, 1953, and this report was written April 17th.

Q. That report also came from the files of Deere & Company in Moline? A. Yes.

Q. Were both of those surveys relative to what we would call chisel plows? A. Yes, that is one of the subjects covered. The tool carrier as a whole is covered.

Q. Going back to the Deere clamp, Exhibit 27-A, that is the Deere 100 series, I believe, is it not? A. Yes.

Q. I notice that at the rear of the hinge member there is a plate and some bolts with the plate underneath the shank, is that correct? [106] A. Yes.

Q. The bolts and the plate, with the portion of the hinge member over the shank, embraces the shank, does it not? A. Yes.

Q. You are familiar with the Jeoffroy clamp, are you not? A. Yes, to some extent, I will add.

Q. Mr. Parker, I show you now what has been marked as Plaintiff's Exhibit E. Do you know whether or not that is a Jeoffroy clamp? You may step over here. A. I think it is a Jeoffroy clamp.

Mr. Fishburn: It is so stipulated in the stipulation, Your Honor.

Mr. Morris: No question about it, Your Honor.

Mr. Gold: I want to be sure that this witness knows it is a Jeoffroy clamp, Your Honor, of his own knowledge.

Q. (By Mr. Gold) You have seen such clamps as this, Mr. Parker? A. Yes.

Q. Now, if you will look, is there a plate and bolts under the shank so that the plate and bolts and the portion of the hinge member immediately above embrace the shank at the rear of the frame? A. Yes.

Q. Do you know that this device was held in contempt in [107] the contempt action, Graham versus Jeoffroy? A. One was. I am not familiar enough with the details to be able to pick out which is which.

Q. I show you what has been identified as Plaintiffs' Exhibit D. Do you know that that is a hinge member and a portion of a shank from a Jeoffroy clamp? A. I presume it is. It is so marked.

Q. It has a loop portion around the shank at the rear of the hinge member with a set screw, does it not? A. Yes.

Q. Do you know that that was also a clamp that was held to be under the claims in the contempt action in Graham versus Jeoffroy? A. I know that there was one so held.

Q. I now show you what has been marked as Plaintiffs' Exhibit C. Do you know that that is also a Jeoffroy clamp? A. Yes, I think it is.

Q. It has a loop portion under the shank at the rear of the clamp, does it not? A. Yes.

Q. This tag shows it is HT-5 Jeoffroy clamp, does it not? A. Yes.

Q. Do you know that that was the clamp held to infringe the Graham 798 patent in the suit upon that patent? [108] A. I can't distinguish between them. I have read the opinions of the Court in each case, but the opinion does not show the details—there is no drawing in the opinion and I have a rather sketchy knowledge, not enough to testify to under oath.

* * *

[110] Plaintiffs Exhibits D-1 and E-1 marked.

[111] Cross-Examination by Mr. Morris.

Q. Mr. Parker, I may be the only one in the courtroom that missed this awhile ago, but I didn't hear any testimony as to the drawing, Defendants' Exhibit 46. Is

that drawing a blueprint of the final production model of the Deere 100 series spring clamp? A. Yes. At least that shows the model that we first went into production on.

Q. All right. Was that the device after the modifications had been made upon the structure as shown in Defendants' Exhibits 45-A and 45-B? A. Yes, the new drawing includes those changes.

Q. The new drawing, Defendants' Exhibit 46, includes the suggested changes as shown in pencil on Defendants' Exhibit 45, which was the original drawing? A. Yes.

Q. All right. I believe that is all the questions I will ask of this witness at this point.

I may recall him as a witness on defendants' case.

(Witness excused.)

---

[112] GEORGE DWIGHT HUNTER, called as a witness on behalf of the plaintiffs, was duly sworn and testified as follows:

Direct Examination by Mr. Gold.

Q. Mr. Hunter, will you state your name, please. A. George Dwight Hunter.

Q. How o'. are you? A. 45.

Q. What is your address? A. 1531 70th Street, Des Moines, Iowa.

Q. What is your occupation? A. Products engineer.

Q. By whom are you employed? A. John Deere Des Moines Works.

Q. That is a manfacturing plant of Deere & Company? A. Yes.

Q. What are your duties in connection with your position? A. I am supervisor of a group of men that are engaged in the design and development of tillage tools.

Q. When you refer to tillage tools what do you mean? A. Specifically, we are engaged in the design and development of tool carriers, tool bars, row crop cultivators.

Q. And chisel plows? A. The term chisel plow is I believe what we call a tool [113] carrier.

Q. How long have you had your position as supervisor of your group? A. Since November 1, 1961.

Q. And your position prior to that time? A. I was a project engineer.

Q. When you say a project engineer, will you tell us a little more specifically what you mean. A. As project engineer I was supervisor of a smaller group of men engaged in much the same kind of work but in a smaller scope.

Q. What is your educational background? A. I am a graduate engineer from Iowa State College, and I have a liberal arts degree from the University of Iowa.

Q. In what year did you get your engineering degree? A. 1950.

Q. And for whom did you go to work after you graduated? A. John Deere Des Moines Works.

Q. And that has been your only employment since you have been out of college? A. Yes, sir.

Q. What was your first position with the Deere Des Moines Works? A. I started as a student engineer.

[114] Q. And what were your duties? A. I was engaged in design and development of corn harvesting equipment.

Q. And what was your next work? A. I then went to the tillage section.

Q. And you have been in the tillage section ever since? A. Yes.

Q. Would you say now you are in charge of the tillage section? A. Yes.

Q. Approximately what year did you start in the tillage section? A. Fall of 1950.

Q. You made reference to the tool bars when I asked about chisel plows. Can you be more explicit as to the meaning of tool bars? A. We refer to the tool bar as an integral machine, one that is integral with the tractor, three point hitch or similar device.

Q. And in that tool bar, would that be a bar section something on the order of this square bar that is in this hinge member, 650 series? A. Yes.

Q. I believe Mr. Parker referred to a 600 series and 900 series. They were tool bars, were they not? [115] A. They were what we refer to as tool carriers.

Q. Now will you distinguish between a tool bar and a tool carrier? A. Tool carrier is a drawn type machine, has its own carrying engaging wheels.

Q. And do I understand that a tool bar would be something that would be connected directly to the tractor and possibly—or tractor lift that could be raised and lowered from the tractor to do the tillage work? A. Yes, that is correct.

Q. Would have no ground engaging wheels? A. Normally not. It would be engaged by the tractor wheels.

Q. And the tool carrier would be what you might call a pull type? A. That is right.

Q. The tool carrier would have square bars similar to the one we have mentioned a moment ago on this fixed member that would be secured together to form a kind of a frame? A. It could have a square bar or an equivalent member to perform what the square bar would do.

Q. Back prior to 1953 did you have any other shaped bars on your tool carriers? A. No, ours were square bars.

Q. All square? [116] A. Yes.

Q. Now, the 100 series has a tubular member and that would be a part of a tool carrier? A. Yes.

Q. It makes up a frame for mounting these clamps of the plows, does it not? A. Yes.

Q. In your work in 1952 did you go out in the field to observe equipment and its operation? A. Yes.

Q. Particularly tillage tools? A. Yes, as I was primarily concerned with the design of tillage tools that was my primary object.

Q. What would be the occasion of those trips that you would make? For what purpose would the trip generally be made? A. A trip of that kind would usually be made to call on our dealers and branch house people to determine the adequacy of our tools, how they were performing, if they were doing what was intended.

Q. And your dealers would tell you about the competitive items in the field? A. Yes, we would be also interested in competitors' tools.

Q. And if there was any new equipment in the area of a [117] competitor you would probably go see it, would you not? A. There is a possibility I would, yes.

Q. If it was close by so you could you would do that, wouldn't you? A. Well, if the occasion was such that we could we probably would.

Q. Did you see a Graham spring clamp plow in 1952 and 1953 in your trips? A. Yes, I have seen them.

Q. Had you also seen the Jeoffroy plows? A. Yes.

Q. In what areas would you travel? A. What period are we referring to?

Q. Still in 1952, 1953, that period. A. At that time I was primarily interested in tillage tools used in wheat producing areas. As a consequence my trips were into those areas.

Q. That would be all the way from Texas to in Canada in the wheat area? A. Wherever wheat was grown, yes.

Q. And that would include what we call the rocky territory? A. Yes, there would be rocky territory included.

Q. Actually, Colorado is also rocky territory, is it not, farm areas? A. The only portion of Colorado I have been in was the [118] extreme east portion adjoining Kansas and I don't recall rocks in that area.

Q. Do you know about Arkansas? A. I haven't traveled Arkansas.

Q. Montana, South Dakota, those areas would be called rocky territory? A. My experience in those states is that there are areas of both kinds, rock free and some with rocks.

Q. In the rock free the farmer has probably cleaned the rocks off of his farm through the years? A. I believe there are areas that didn't have rocks to be cleaned off, but there is evidence of rocks being cleaned off. You see rock piles in some areas.

Q. Quite frequently you see the rock piles? A. In some areas, yes.

Q. Some of those rocks are quite large, are they not? A. Varying sizes, yes.

Q. And some would be buried under the ground and would be uncovered as the farmer was tilling his soil or found when he was tilling his soil? A. I assume that there would still be some there, yes.

Q. Now, this 600 series and the 900 series, did they differ as to the tools or shanks that would be connected to the bars? A. As I recall, we used the same ground working tools on [119] both machines.

Q. Mr. Hunter, I have a photostat of an exhibit that was marked Exhibit A in connection with some interrogatories in this case, and I show you an illustration of the 900 series. Is that a proper illustration? A. Yes, that seems to be.

Q. Does that have a coil in the shank of the ground working tool? A. Yes.

Q. That coil is about two complete circles, is it not? A. Yes, approximately two turns.

Q. And the forward end is fastened by a rigid clamp to a square bar? A. That is correct.

Q. And that particular illustration is one of what you would call the pull or drawn series? A. Yes, that is our 900 series tool.

Q. And is that type of coil in the shank the device that you were using to support chisels in plowing prior to the development of the 650 series spring clamp? A. That is one of the kind of standards, yes.

Q. That was the only kind that had any spring action, wasn't it? A. Yes.

Q. And that is the same thing that you used on the 600 [120] series? A. Those were used on the 600 series, yes.

* * *

(Plaintiffs' Exhibit K was marked for identification.)

Q. (By Mr. Gold) Mr. Hunter, I now show you the photostat of the bulletin that we were just discussing, and which is now marked Plaintiffs' Exhibit K, is it not? A. Yes.

Q. That is the one that shows a coil in the shank on the 900 series? A. Yes.

Q. You also had tools that would be mounted on what you might call a flat spring shank that the forward end of the shank was fastened with a rigid clamp to the bar, is that right? A. For the 900?

[121] Q. Yes, sir. A. No, we didn't have flat springs on the 900.

Q. Did you have them on the 600 series? A. No.

Q. Then the only shank type that you would have would be that coil shank on the 600? A. In addition to the coil shank that you referred to we had stiff standards and standards for mounting 30-inch sweeps.

Q. Now, a stiff standard, would that go almost directly vertically down from the bar, the frame bar? A. There were two types, a front type and a rear type. The front type went, as you described, almost vertically down from the bar. The rear type extended rearwardly from the bar and then curved downward.

Q. Both were rigid and were not intended to have any spring action? A. That is right.

Q. Did you have any difficulty with your tillage tools in the rocky territories of the country? A. I am not sure as I understand what you mean by difficulty, sir.

Q. Did you have any breakage? A. There would be occasional breakage.

Q. Do you have any bending of frames or bars? [122] A. Not that I recall.

Q. Do you have any cases where those—what I call pigtail shanks were straightened out to some extent? A. If they were used in improper manner, there were occasions when they would bend, yes.

Q. Your sales that year of tillage tools that you had as far as the chisel type devices that you had in '52 and early '53 had fallen considerably, hadn't they? A. I haven't any knowledge of the sales volume.

Q. Do you know whether or not the dealers were giving you resistance to those types of devices? A. No, sir.

Q. Did you receive survey reports made by Mr. Lee before you started your development of the 650 series of

spring clamps? A. I recall Mr. Lee's reports, but as to timing, whether I saw those at the time I started or soon after I don't recall.

Q. But you were given those reports about the time you were assigned the job of designing what ended being the 650 series? A. I was given the opportunity to see them, to read them, yes.

Q. Within a month or two of the assignment of the job? A. Before or after? It was about the time I started as [123] I can recall, yes.

Q. If a farmer using one of your 600 or 900 series devices with chisels on them ran into rocks, would that be abusive use? A. Not if he had the coil springs, what you have referred to as the pigtail standards, they were intended to work in some rocky conditions.

Q. In fact, that is the only thing your company had to offer for use in rocky farms, is it not? A. At that time it was, yes.

Q. Approximately when were you given the assignment to develop a new tillage tool clamp, personally? A. As I recall it would have been the spring of 1953.

Q. I show you what has been marked for identification as Defendants' Exhibit 30. Can you tell us what that is and the date of it? A. This is titled "No. 600 Tool Carrier Survey, Kansas City Branch, March 9 to 19, 1953." There is a date in the upper right-hand corner, March 30, 1953, with the initials, "E. H. L." under the date.

Q. I show you the Defendants' Exhibit 31. Can you give the date of that report? A. This date is indicated as April 17, 1953.

Q. And you would have been assigned the new development of a tool mounting about—somewhere around those dates [124] of those reports? A. It would have been somewhere around that, I don't know how soon. Possibly within a month or two.

Q. And you were handed each of these reports, Defendants' Exhibits 30 and 31, near the time you started your assignment? A. I don't recall specifically the handing of them to me, but I apparently had them near that time.

Q. Did those reports make any suggestion as to the design of a new device? A. I don't believe there was any

specific suggestion. It was more a report of this man's conversation and findings as he traveled these different areas, called on our dealers.

Q. And it would include information that would be helpful to you in your consideration of the subject of a new design? A. Such a report would probably not have very much specific help for a design problem. That would be of a general nature that would be used more to decide policy probably.

Q. You would be familiar with the problems in the field from your own trips that you wouldn't need any outside suggestions as to what to build? A. Well, we are glad to get suggestions wherever they [125] come from. But of course we—our field trips are our biggest source, and suggestions by anyone are listened to.

Q. Knowledge of what is being used in the field also helps out, does it not? A. Yes, that is part of our business.

Q. Now then, after you were assigned the new project of a new mounting for the chisel, what did you do? A. You mean my specific actions or—you mean what was the next step in our development?

Q. Yes, sir. A. We proceeded to investigate and consider different ways of providing a standard with a cushion spring mounting.

Q. Prior to your development of the 650 series spring clamp did Deere have a Graham spring clamp or a Jeoffroy spring clamp? A. As I recall, we had a Graham clamp assembly, but not a Jeoffroy.

Q. You have had a Jeoffroy spring clamp since the development of the 650, haven't you? A. We had a Jeoffroy spring clamp, oh, probably as late as 1959.

Q. About the time you developed your 100 series? A. No, sir, it was after the 100.

[126] Q. Would you say it was about that time? A. No, sir, it was definitely after the 100 was developed.

Q. Have you checked that since you gave your deposition in Moline? A. I have.

Q. Can you tell us the date that you received the Jeoffroy clamp? A. It was during the winter of 1959-60.

Now, whether it was December of '59 or January of '60 I don't recall.

Q. That was the first Jeoffroy clamp you had had at the Des Moines plant? A. That is correct

Q. You had seen Jeoffroy clamps though in the field, I believe you stated earlier, prior to 1953? A. Yes.

Q. Mr. Hunter, I believe in Moline, you stated that you had not been able to find any preliminary pencil sketches or rough sketches of the device that you worked out in 1953? A. That is correct.

Q. The first drawings you were able to find were produced there at Moline, and are those the drawings I have put before you? A. Yes, these are the first.

Q. Those are Defendants' Exhibits 33-A and 33-B, are they [127] not? A. Yes.

Q. Those were the drawings that you sent to Mr. Parker for an opinion? A. Yes.

Q. Or I guess Mr. Bopf sent them? A. He forwarded them to Mr. Parker, yes.

Q. Who is Mr. Bopf? A. He is our chief product engineer.

Q. And was at that time? A. Yes.

Q. As an engineer assigned to a project, you would have access to any materials in the engineering department at Des Moines, would you not? A. Yes.

Q. Anything you might have in your library? A. Yes.

Q. You would be familiar with a file of patents that were there on tillage tools? A. Familiar? I am not sure I understand the meaning of the word familiar.

Q. You knew of the library of copies of patents? A. Yes.

Q. You had gone through them at times? A. Yes.
[128] Q. A copy of the Graham 798 patent was in that library, was it not? A. Yes.

Q. In 1953? A. Yes.

Q. In the spring of 1953, was it not? A. I can't answer that correctly. I am not sure when it would have been there.

Q. Mr. Hunter, can you refer to Defendants' Exhibit 33-B and tell us the parts of the clamp and how it would operate in plowing, and particularly when it would hit a rock or other obstruction, when the chisel would hit a rock? A. We have a fixed member fastened to the tool bar—

Q. I believe there are numbers on it, Mr. Hunter, circled in red with arrows. If you can refer to those numbers it might help show up in the record. A. The bottom half of the fixed member.

Q. Now, Mr. Hunter, we have placed the Defendants' Exhibit 33-B on the easel. Would you care to step down and point to the parts as you describe them. A. This clamp is comprised of a fixed member, the lower half of which is indicated by the number 1, and is this part of the assembly that we see here. The top half is indicated by number 17. These two halves [129] are held together across the frame member by two bolts, number 11 and 12. In the rearward upper portion of the lower half of the fixed member there is a pivot bearing, indicated by number 26, through which pivot pin number 27 is mounted. The pivot pin is held in position by the cotter pins on each end, indicated by number 28 and 29.

In the lower rear corner of the lower half of the fixed member is a member tying the two side plates together, as indicated by item No. 8. The flat spring standard indicated by number 30 is attached to it by—attached at its forward end to the hinge member number 25 by means of a carriage bolt, which is apparently item number 31, the nut on the bolt being item number 36. The hinge member is fastened to the top of the flat spring standard by the bolt, as I mentioned, and in this device the forward upper surface of the hinge member contacts the forward surface of a cut-out portion of each side member. The forward end of the side members are formed inwardly in this cut-out portion so as to reach over and form a stop for the top.

Q. I have now placed Defendants' Exhibit 33-A on the easel. Will that help you to identify those surfaces you were just referring to? [130] A. Yes, I believe it will. These surfaces are shown on the forward end of the side

members, just below the area indicated by number 45. At the forward lower end of the flat spring standard is a retaining clip number 35, which retains the U-bolt. The U-bolt engages the clip which in turn bears against the lower surface of the forward end of the spring standard. The upper end of the U-bolt passes upwardly through two compression springs and has a nut and washer at the top end of the U-bolt to engage the spring.

Q. The upper face of the hinge member 30 at the forward end would engage the lower face of the two members, two forward portions of the side plates that are designated 45 and 46 in the view on the lower righthand corner of Defendants' Exhibit 33-A, is that right? A. That is correct.

Q. That forms a stop surface to stop the upward swinging movement of the shank and the hinge member in response to the urging of the spring? A. Yes.

Q. That would serve as two locating faces to position the tool or the end of the tool with the proper suction in its plowing of the ground? A. That is right, it positions the standard in its proper [131] working position.

Q. Now, if you would strike—if the chisel would strike a rock in the ground, what would be the action that would take place? A. The increased resistance at the bottom end of the flat spring standard would cause the standard and hinge to rotate about the hinged end, the hinging action, which would cause the forward end of the hinge standard and hinge member to move downward and compress the spring, the cushion springs.

Q. That would allow the tool to raise up in the back and tend to clear the obstruction? A. Yes.

Q. Jump over the rock as it raised up? A. Yes.

Q. Now, in normal plowing operations there would be a force on this shank or standard, as you call it, that would tend to force it up against the hinge member at the rear portion of the hinge member, is that right? A. Yes, there is a force to the rear and upward.

Q. That would maintain the standard in contact with that plate of the hinge member? A. Yes.

Q. Now, if you were going to travel from one place to another with the plow, you would raise the frame up

[132] on its ground engaging wheels so that the tool would be out of the ground, would you not? A. That is normally done, yes, sir.

Q. And when you did that wouldn't the shank tend to rest on this pin, number 8, that extends across between the side plates of that fixed member? A. Normally not. The tension of this bolt attaching the standard to the hinge member is normally sufficient to hold the two together so that the spring standard would not be resting on this member tying the two side plates together.

Q. Your drawing shows almost the contact in Defendants' Exhibit 33-B, does it not? A. That shows that as being very close, that is correct, but it is not intended that it carry the standard. That was not its purpose. Its purpose was to tie the two side members together for mutual support in side loading, imposed by the standard into the fixed member, and also to resist the deflection of the spring standard after it had, as you spoke, jumped the rock and rebounded into its working position.

Q. It would serve to support the shank to some extent in a rebound after striking the rock? A. Yes, that could happen.

Q. Now, this member that we call a fixed member with its [133] cap and bolts are supposed to be held tight and immovable relative to that bar of the frame, the square bar, is that right? A. Yes.

Q. After these drawings were sent to the patent department of John Deere, what did you do as the next step in your development? A. The patent department advised us that there was a possibility of infringement with the Graham patents because of the means of positioning our standard in its working position.

Q. And they sent you letters and the drawings that have been marked as Defendants' Exhibits 34-A and 34-B? A. Yes.

Q. Then did you modify your design? A. At about the same time that we were advised of this omission that we had in our first arrangement we decided to go from a fabricated clamp assembly to a cast assembly, and at the time we went to the cast assembly we modified the stop or positioning device.

Q. Mr. Hunter, I am holding up Defendants' Exhibit 38. Is that your next drawing? A. Yes, sir, that is.

Q. Now, will you tell us what changes you made from the structure that is shown in Defendants' Exhibits 33-A [134] and 33-B. A. As you recall, in the 33-A and 33-B Exhibit we had the positioning of the standard accomplished by the upper surface of the hinge member contacting offset portions of the side plates or the fixed member. In this arrangement the hinge member is terminated rearwardly of the forward end of the flat spring standard and the cast lug is incorporated in the fixed member to contact the forward end of the spring standard directly and thus position the standard in its proper position.

Q. Now, the standard itself was not changed at any angle or relation to the horizontal between the structures shown in Defendants' Exhibit 38 and that one in Defendants' Exhibit 33-B, was it? A. Parts were adjusted in their size and proportion to hold this standard in its proper working position.

Q. So that the tool on the lower end of the standard or shank would be in the same position as you had in the structure that was used in the clamp of Defendants' Exhibit 33-B? A. Yes.

Q. The fixed member and the hinge member were both then designed to be made of castings, is that right? A. Yes, these were cast members here (indicating).

[135] Q. Where in your original model they were made of fabricated sheet steel or plate steel? A. That is right.

Q. It would be an economical manner of making it to cast it rather than to try to weld it up out of plates, wouldn't it? A. There were several advantages of casting over fabricating. Manufacturing difficulties were predicted in this type of an arrangement, and also in this arrangement where we cast we were able to include the stop lug, the dry sand core, which you find in the interior areas of this fixed member, and thus be assured of the proper position of the flat spring standard with respect to the hinge pin at all times.

Q. Whether you had a stop lug on it or not you could still make the inside of that casting out of a dry sand core,

could you not? A. Yes, that requires a very fine quality in the casting.

Q. The very nature of the clamp would require a dry sand core for that channel? A. Areas in there would, yes, certain areas.

Q. Now, we have another drawing, Defendants' Exhibit 39, that I believe that you told us in Moline had a screw or bolt for a stop, is that correct? A. Yes, that has an adjustable device for positioning the [136] standard.

Q. That took the place of a rod that you had in Defendants's Exhibit 38? A. That is correct.

Q. Actually you didn't make any with a bolt for a stop, did you? A. They have not been on the market.

Q. Now, Mr. Hunter, we have placed another drawing, Defendants' Exhibit 41, on the easel. Were there some other modifications made in that one from what you had in Defendants' Exhibit 38? A. Yes, there are some part detail changes. On the rear upper corner of the fixed member we revised that to include a reinforcing rib which completely goes around the rear portion of the fixed member. As you recall in this first device, this rib only went as high as the hinge pin member. Also we revised the means of holding the bolt heads from two lugs as shown on Exhibit 38 to two lugs on each side of the side members to engage the head of the clamp bolts.

Q. Now, the rib you refer to is on this fixed member casting, as I have it in my hand, is it not, at the back? A. Yes, this rib up and over the top portion there. Originally we had it just up to this level (indicating).

[137] Q. That was just a reinforcing rib for strength? A. That is correct.

Q. Now, you referred to some lugs underneath. They are on each side of the bolts in that channel, are they not? A. Yes.

Q. They are merely so that you can put the bolt in place and it won't turn while you screw the nuts down? A. That is correct.

Q. Will you point out the bolt there. A. (Indicating). There is no way of putting a wrench on. It is a hidden head.

Q. Now, those lugs that you have mentioned, Mr. Hunter, were put on merely for convenience of assembly so that you could tighten the nuts on a bolt that had an inaccessible head, is that correct? A. Yes.

Q. Those lugs had no function as far as the operation of the clamp, did they? A. No.

Q. And outside of reinforcing or strength, the rib on the back had no function? A. That is right.

Q. In other words, those changes did not change the operation of the device from what was shown in the [138] other exhibit, Defendants' Exhibit 38? A. That is right.

Q. Now is the commercial device substantially as shown in the drawing, Defendants' Exhibit 41, commercial device being the Deere spring clamp of the 650 series? A. With the exception of minor revision to parts, to primary parts, it is essentially the same.

Q. Now, will you tell us what happens in plowing operations with a clamp of the structure shown in Defendants' Exhibit 41. A. In normal soil conditions of course the cushion spring standards are tightened sufficiently to exert enough upward force to the forward end of the spring standard to hold it against its positioning lugs.

Q. That is the same as was done when the standard in our device as shown in Defendants' Exhibit 33-B would engage the lower face of the side plates of the fixed member? A. Yes, the spring force would hold this against the stop.

Mr. Morris: I believe, Mr. Gold, you said the standard engaged the lower face of the side member and I don't believe you meant that, did you?

Mr. Gold: No. The upper face of the hinge member engages the lower face of the side plates of [139] the fixed member? A. That is correct.

Q. In other words, they were to position the plow in its normal operation for the right suction? A. Yes, that is right. When an immovable object, a rock or a root would be struck with the lower end of the standard, increasing the resistance at the lower end of the standard, it would cause a hinging action of the standard which in turn would tip the forward end of the standard and hinge downward.

I believe this secondary "U" on here shows how that would tip to a lower position on the forward end, thus compressing the cushion springs, and as soon as the obstacle was cleared the energy stored in the cushion springs would return the standard and hinge members to their proper operating position.

Q. You might say the normal position where the stop faces are engaged? A. Yes.

Q. Mr. Hunter, in discussing the structure when you made a casting rather than welded plates, I don't believe we mentioned one part. In the welded structure we had a pin 8 between the side plates that served as a stop on the rebound of the shank after it struck a rock. The fixed member has a portion of the casting, [140] does it not, to do the same thing? A. Yes, we incorporated the same feature in the lower rear corner of the cast fixed member, which is shown on the corner here and as was shown on the drawing. That member would, like you mentioned, restrict the standard on rebound and also tie the two side members together for mutual support.

Q. That is shown actually in a dotted line in both the drawings, Defendants' Exhibits 38 and 41, is it not? A. Yes, it is in both drawings.

Q. Is that the part that is shown in Defendants' Exhibit 38-B in a loop-like part, that is crosshatched, it looks like with pencil, in the lower right-hand figure? A. The crosshatching is misleading. I don't know when or why that was added. This is a view taken right through the "V" that engages the tool bar. See, this vertical line. And the only part that should be crosshatched would be the portions that would run straight down the sides. This member in here would not show on that view. There would only be an outline of this part back there. Have I made myself clear?

Q. Yes. That would be true in your original drawing, but your crosshatching apparently has been added later, has it not? A. Yes, that is penciled on. That wasn't on the original [141] drawing.

Q. Did you pencil those crosshatches— A. No, sir, I don't know when those were put on there or by whom.

The Court: Mr. Gold, I think we may as well recess for the evening. I would like to ask the witness a few questions at this particular stage of the trial.

As I understand the operation of the chisel itself, when it hits a more solid object than the dirt, of course it would tend then to impede the progress of the chisel and that would exert the hinge then on its—would stop the forward progress of the chisel, then the hinge would throw the pressure down on the foward portion of the shank?

A. Yes, sir.

The Court: Which then would be pressed down against the coil springs compressing the springs?

A. Yes, sir.

The Court: And then that would tend to bring it on further up and over the object?

A. Yes, sir.

The Court: And when the object is cleared the coil spring would bring back the shank to its normal position?

[142] A. Yes, sir, that is correct.

* * *

---

[143] THURSDAY MORNING SESSION, MAY 3, 1962

GEORGE DWIGHT HUNTER, resumed the stand and testified further as follows:

Direct Examination (Continued) by Mr. Gold.

Q. Mr. Hunter, before we recessed in the evening yesterday, the Court asked about the movement of the shank in plowing operations. I have removed the springs from a 650 clamp, and if you will step down here maybe we can demonstrate to the Court exactly what the movement is. The reporter asked us to talk a little louder when we are over here so she can hear us. A. Very well.

Q. Mr. Hunter, I now show you a clamp with a shank that has been identified as Plaintiffs' Exhibit I. That clamp is the Deere 650 series, is it not, without the springs? A. Yes, it is.

Q. I have placed a chisel on the lower end of this shank. That chisel is a Graham chisel. It is not a Deere chisel, is it? A. That isn't John Deere, no.

Q. It would be very similar to a John Deere chisel? A. Yes.

[144] Q. Now, Mr. Hunter, will you demonstrate to the Court the movement that would occur in the plowing operation with the shank and the hinge member. A. In normal operating conditions where the soil is without immovable objects, the standard would be held in this position as shown here by the pressure of the springs transmitted through this U-bolt pulling it against the stop, which is what we call the normal operating position. When the standard, the chisel, would strike an immovable object such as a rock or a root, the additional pressure on the point of the chisel would cause the standard to assume a hinging action, the chisel would move to the rear and upward, in this manner, thus compressing the compression springs, which would be on the upper portion of the U-bolt. After the rock or root was passed over the stored energy in the compression springs would return the standard to its normal operating position, back against the stop and fixed member.

Q. Now, the hinge member and the shank move in unison in that hinging movement? A. The hinge member and the shank would move together, yes.

Q. And in the normal position they are held by the springs against the stop? [145] A. Yes.

* * *

Q. (By Mr. Gold) That would be the same hinging movement that you had in your first model that was shown in your drawings, Defendants' Exhibit 33-B, is that correct? A. Yes.

Q. Would there be any difference in the function and operation of the clamp that we have just been referring to, Plaintiffs' Exhibit I, and the clamp that was shown in your drawing, Defendants' Exhibit 33-B? A. I am not sure I am clear on your question. You are inquiring about the movement of the standard itself?

Q. Yes, sir, the way it functions as it plows. A. It would be the same action, plowing action.

Q. And that is the same movement that occurs in the hinge member and the shank in the structure shown in the Graham 798 patent, isn't it? A. Yes, that would be the same action.

Q. Now, we placed a chisel on the lower end of the shank, Plaintiffs' Exhibit I, to show a tool that would be mounted in actual plowing operations, a tool such as the sweep or spike, whatever you might want to use in the ground working tool, would be placed in the same [146] location as an alternative ground working tool, is that right? A. Yes.

Q. There are two bolts to hold that particular tool on the shank, is that right? A. Yes, two plow bolts are used.

Q. Any particular structure of a plow bolt? A. The plow bolt has a round flat head that fits into a recess in the chisel or sweep to eliminate the bolt head sticking above the surface of the ground working object.

Q. It would be kind of like a flatheaded wood screw, is that right? A. Yes, of that nature.

Q. I believe that in commenting about some changes that were made possibly we overlooked one. In the structure as you have shown it in Defendants' Exhibit 41, you added some ribs on the upper part of the hinge member, did you not, over what you had in your original design? A. The original design, the hinge member was made from a flat piece of bar stock, and when we made the change from the fabricated structure to the cast structure, reinforcing ribs were included in the top surface of the hinge member as a usual means of providing strength for [147] a cast part.

Q. That is these ribs that I am pointing to here in the hinge member of the 650 series? A. Yes.

Q. Now, I believe also in your structure, and possibly it does not show in your drawing, Defendants' Exhibit 41, but there are spaced ribs on the bottom of this hinge member, are there not, in the actual device? A. Yes, that is correct. That again is a usual practice. In a cast member it is much easier to cast a straight surface of that nature than if it was smooth without the ribs.

Q. But the two bottom ribs on the hinge member engage the upper face of the shank? A. That is correct.

Q. The purpose of the two spaced ribs on the bottom face of the hinge member is actually to avoid any little extensions that would cause a rocking action rather than a good, flat contact, is that right? A. It is to facilitate casting of two straight surfaces.

Q. You want a straight surface so it will have good contact with the upper face of the shank? A. Yes, sir.

Q. Were there any other changes that we might have overlooked in your development of the 650 series from the [148] time you made it into a casting till you made a commercial device? A. We changed the means of supporting the cushion spring, the base of the cushion spring when we went to the casting. In the fabricated version, the base of the spring contacted the top surface of a plate, the forward end of the fixed member, and in the cast version we provided a spring base, separate spring base that had a pivoting device which permitted proper alignment of the line of pull with the compression spring.

Q. You also made a base on the washers or spring seats so that it would engage the spring and the spring wouldn't have to have a round end, is that right? A. That is correct.

Q. Is this a more economical method of making it, to have a seat? A. Yes, there is a price differential. You save the grinding cost on the spring manufacture.

Q. That doesn't make any difference in operation, does it? A. The performance of the springs would be essentially the same.

Q. Approximately when was the first fabricated model of your clamp tested? A. September of 1953.

[149] Q. Do you know approximately when the first one was sold, commercial device? A. There were none of the fabricated—

Q. I mean the first commercial device, the casting. A. Oh, excuse me. Our first sales would have been in the spring of 1954.

Q. Have you had breakage of the parts with your 650 series in actual field operations? A. In general they have been quite serviceable. There has been some minor—

Q. You haven't had any real excessive breakage of shanks with the 640 series? A. No.

Q. Then you apparently have solved the problems of the rocky territory plowing, as far as your company is concerned? A. Apparently so.

Q. You also developed the 100 series clamp, did you not? A. Yes.

Q. Approximately when were you assigned the project of developing the 100 series? A. I believe we started work on that in 1958.

Q. And what was your position relative to that project? A. I was project supervisor at the time.

Q. Were you given any reasons for developing a new tool [150] carrier at the time you were assigned the project on that—on the 100 series? A. We felt that there was a need in our marketing situation for a lighter, more economical tool carrier than the 650, which was the basic reason for undertaking the project that finally ended with the placing of the 100 tool carrier on the market.

Q. Did you also want to make a complete drawn plow that would be sold in a similar condition to the farmer? A. I am not sure I understand you. It was going to be a drawn machine. Is that the question?

Q. Yes, with the clamps mounted on the frame so the farmer could have it as a complete plow? A. Well, of course it is sold from the factory unassembled. Maybe I am not understanding your question.

Q. Do the dealers assemble the plows for the farmers? A. Yes, that is right.

Q. What was your first step in starting the design of the new tool carrier? A. After being given the project of developing a lighter, more economical machine, I proceeded to investigate possible ways of attaining that objective. My first efforts were in the direction of using a solid square bar of a 2-inch square dimension rather than the 2-1/4 and using lighter frame members.

[151] Q. Did you make any investigation in the field as to what else was on the market? A. We were aware of the machines in the field, yes.

Q. Did you make any further investigation at that time? A. Not as a part of this project as such.

Q. Under your other trips you were fully familiar with the competitors' equipment in the field? A. Yes.

Q. Were any preliminary drawings made of the new device, in the preliminary layouts? A. Are you referring to the machine itself or the—

Q. The clamp. A. The clamp itself? Yes, we made drawings of our first versions.

Q. Mr. Hunter, I show you sets of drawings that have been marked for identification Defendants' Exhibits 45-A and 45-B. Were those your preliminary drawings which you made relative to the 100 series? A. Yes, they were.

Q. You don't have any other drawings that were made prior to these? A. No. These were our first.

Q. And these were the drawings that were sent to Mr. Parker or to the patent department of Deere & Company? A. They were.

[152] Q. Did you have anything to do with placing the pencil notations or marks for possible revisions on Defendants' Exhibit 45-B? A. Well, I was in a conference when they were put on, but I didn't put them on.

Q. I show you exhibit that has been identified as Defendants' Exhibit 46. Can you tell us what that is? A. This is a drawing of our complete assembly of the flat cushion spring standard for the 100 tool carrier.

Q. And that would be substantially as it is now manufactured and sold? A. Yes.

* * *

Q. (By Mr. Gold) Mr. Hunter, the clamp I am now holding up, identified as Plaintiffs' Exhibit J, that is the commercial 100 series Deere clamp of the same structure as shown in the drawing, Defendants' Exhibit 46? A. Shall I come down there to identify this?

Q. Yes, if you will. A. Yes, sir, it is.

Q. Now, Mr. Hunter, will you please step to the easel and tell us how the 100 series clamp operates in plowing and the movement that occurs when the chisel strikes a rock or immovable object. [153] A. In normal operating

conditions, where the soil is free of obstructions, the standard would be held in this position (indicating), by the compression springs, this position being determined by the upper base of the hinge member striking the lower face of the tool bar, which in this case is a square tube. When the chisel or sweep on the lower end would meet the immovable object, meet resistance at that point, it would cause the standard and hinge member to take a hinging action, which would cause the forward end of the standard to move downward, and the lower end with the chisel or sweep on it to move upward and to the rear, thus relieving its contact with the obstruction. After passing over the obstruction the stored energy in the compression springs through the bolts to the connection to the forward end of the hinge member would cause the standard and hinge member to hinge upward on the forward end, and once again assume its proper working position against the stop.

Q. That would be the same movement primarily as we demonstrated with your 650 series earlier this morning? A. Yes.

Q. I believe you said that with the commercial device as shown in Defendants' Exhibit 46, that the hinge member strikes or has a face that engages the box carrier, the [154] tube, is that right? A. Yes.

Q. Are those faces designated by the numerals on the Defendants' Exhibit 46? A. Yes. The lug on the top face of the hinge member is indicated by the number 16, and the area of the tool bar that it strikes is indicated by the number 17.

Q. Those memos were placed on that drawing by you? A. As I recall, we numbered these at the time of the depositions in Moline.

Q. Now, with the structure shown in Defendants' Exhibit 45-B, before the alterations, where would the stop be for holding the shank in its normal operating position? A. The stop would have been the forward upper surface of the hinge member, which would contact the lower forward surface of the front fixed member.

Q. That would be the lower surface of the part that is marked with a pencil numeral 2 in Defendants' Exhibit 45-A? A. Yes.

Q. That is also a number that you put on this drawing at the depositions in Moline? A. I am not sure that I put those numbers on, no, sir.

Q. But that number, the 2 in the circle, does designate the face that would form the stop? [155] A. Yes, sir.

Q. And the change made from the structure shown in the drawings, Defendants' Exhibit 45-A and 45-B, was to take off a little material on the forward upper end of the hinge member and add a little material in the portion underneath the tubular member, is that right? A. That was the revision, yes.

Q. So as to move the stop from the forward portion of the fixed member and hinge member to the hinge member added to this frame? A. Yes.

Q. Did that change the function or positioning of the shank in any manner? A. No. Those revisions were so made and the parts proportioned as to maintain the standard in its proper working position.

Q. In both the original design as you had it on the Defendants' Exhibits 45-A and 45-B, and also in the structures shown in Defendants' Exhibit 46? A. Yes.

Q. The shank had the same position? A. Yes.

Q. When you are plowing in hard soil—maybe we can say virgin soil—would there be a tendency for the shank and hinge member to swing and compress the springs? [156] A. Yes. Extremely hard ground will cause that hinging action. In other words, it is dependent upon the amount of resistance that the chisel encounters.

Q. Now, this fixed member is made in two halves that are clamped tight to the tubular frame, is that right? A. Yes.

Q. So that they are rigidly held together? A. Yes.

Q. They are supposed to operate rigidly held together so that they are real right and can't move, one relative to the other? A. Yes.

Q. They both cooperate to mount the hinge member and the shank so the hinge member and shank can pivot, is that right? A. Yes.

Q. You may resume the stand now.

I believe you advised us that you didn't have any other working drawings of the 100 series, is that right? A. Of the clamp arrangement?

Q. Yes, sir. A. Yes, that is correct.

Q. As I understand it, this tube is a part of a more or less rigid frame that is carried on wheels and the [157] clamps are spaced along the frame members, these frame members extending transversely of the path of travel of the plow? A. Yes.

Q. And when you are ready to plow you in effect raise the wheels relative to the frame so the frame will go down and the chisels enter the ground? A. That is correct.

Q. More or less like we saw in that picture yesterday morning? A. Yes.

Q. In your 100 series, can you tell us where the spring bolts connect to the hinge member? A. Would you like to have me point it out?

Q. Can you show us on Defendants' Exhibit 27-A? A. This bolt passing through the compression spring passes through a hole in the fixed member to a hole in the upper forward end of the hinge member and the head of the bolt is under this lip of the forward end of the hinge.

Q. You have two separate bolts in this 100 series instead of the U-bolt that you had in the 650 series? A. Yes.

Q. The bolts cooperate with the spring to transmit the force of the springs to the hinge member substantially [158] in the same manner or for the same purpose as in the 650 series with the U-bolt? A. Yes.

Q. In the 100 series, the lower end of the springs rest on the upper part of the forward end of the fixed member? You don't have any separate washers or collars on the 100 series, do you? A. That is correct.

Q. You have an angular arrangement immediately above the head or head and washer of the spring bolt so that that does provide a rocking action for the spring bolt as the hinge member moves? A. Yes. That particular shape is provided to keep the loading of the bolt under the center of the head rather than loading the edge of the bolt head as the hinging action takes place.

Q. And that would tend to prevent tipping of the springs during the hinging action? A. Yes. That would tend to reduce the tendency for sideloading in the bolt.

Q. And side loading in the bolt would cause the springs to tilt? A. It could contribute.

Q. Do you find there is much wear in the parts of the structure 100 series such as is shown in Defendants' [159] Exhibit 46? A. No. This arrangement has been quite serviceable.

Q. Never excessive wear in any parts of it? A. No.

Q. Does this bolt, the two bolts and the plate underneath the shank at the rear of the hinge member embrace the shank? A. Yes. There is one bolt on each side of the shank.

Q. And a plate underneath the shank so that there is an embracing relationship? A. Yes.

Q. Do those plates get loose? A. We have had no field reports of their loosening.

Q. That plate and bolt arrangement is very similar to the plate and bolt arrangement at the rear of the Jeoffroy hinge member, as in Plaintiffs' Exhibit E-1, is that right? A. It appears to be.

The Court: Mr. Gold, I don't understand in the series 100 member how the shank or pivoting member engages the bolt.

Mr. Gold: The shank or pivoting member engages the bolt?

The Court: Yes.

Q. (By Mr. Gold) Mr. Hunter, can you explain how the [160] bolt is engaged with the pivot member?

The Court: This is your shank here (indicating)?

A. Yes. This is still part of the hinge member up to this part (indicating).

The Court: Oh, this is part of the hinge member here, part of the pivoting?

A. Yes.

The Court: I see. So when pressure is applied here (indicating) that brings pressure down on this pivoting member, which pulls down the coil?

A. That is correct.

Q. (By Mr. Gold) The portion that we were just showing the Court, Mr. Hunter, would be the forward part of the hinge member that has been designated with a letter "A" on Defendants' Exhibit 46, is that right? A. Yes.

Q. And the head of the spring bolt is under that portion and the spring bolt is designated with a numeral 15? A. Yes.

Q. The number 15 being on the upper end of the spring bolt? A. Yes.

Q. Can you tell us the reason you place the standard or shank below the hinge member rather than above? A. The resultant forces, resultant loading of the standard [161] into the clamp arrangement is upward and to the rear. By having the standard below the hinge member we are handling compressive forces rather than tensile forces in the members of the clamp.

Q. And that gives you a much better or more favorable stress arrangement for your standard than you would have if you place the standard above the plate member of the hinge member? A. We feel that it does.

Q. Now, the upper face of this shank engages the lower face of the hinge member, does it not? A. Yes.

Q. Substantially the same as it does in your 650 series? A. Yes.

Q. Tell us how the force is transmitted from the shank or standard through the fixed member to the beam. If you care to you may step down here and point it out on the drawing, Defendants' Exhibit 46. A. The resultant force from the standard being imposed upon the clamp arrangement is upward and to the rear. Inasmuch as the standard is attached by a bolt at the forward end to the hinge member, this rearward force then is transmitted to the hinge member through the bolt, and is in turn resisted by the pivot pin which engages the fixed member. The upward force is transmitted [162] in this area (indicating) into the lower face of the hinge member and in turn into the pivot pin into the fixed member and into the spring member.

Q. Now, the bolt that you referred to between the shank and the hinge member is the bolt that is down at the lower end of the forward end of the shank, is that right? A. Yes, sir, this bolt (indicating).

Q. As the compressive force of the spring is increased, or maybe I should say as the forces are such that it tends to compress the springs more and more, there is a tendency for the shank to bend at the rear of the hinge member, is there not? A. Yes, sir. Any load imposed upon the bottom end of this standard will cause deflection in this beam.

Mr. Morris: Excuse me just a minute. In the beam?

The Court: You mean the shank?

A. The shank. This is a beam member in reality, but it is in the shank in this case, yes, sir.

Mr. Morris: Since we are referring to the plow beam as a beam, let's try to keep the terminology separate.

A. Yes, it would be confusing.

Q. (By Mr. Gold) And your greatest tendency of bending [163] would be at the rear of the hinge member? A. Yes. This is your highest load area.

Q. And it is to keep that load more favorable that you place the shank below the plate of the hinge member, as you mentioned awhile ago? A. Yes.

Q. Has the 100 series plow been successful? A. Yes, it has.

Q. To some extent the 100 series has taken the place of 650 series in sales? A. There has been a trend in that direction.

Q. Will the 100 series do anything the 650 series won't do? A. No.

Q. Mr. Hunter, I believe you say that you had seen a Jeoffroy clamp in the field back before 1953 or around 1953, I believe you said. Would that have been a clamp such as this one I have in my hand, which is Plaintiffs' Exhibit C? A. I wouldn't recall the details of the Jeoffroy clamps I saw that long ago.

Q. You do recognize this to be a Jeoffroy clamp? A. Apparently it is. It is marked that way.

Q. In the 100 series, as shown in Defendants' Exhibit 46, with the fixed member rigidly clamped to the tubular [164] frame, the tubular frame becomes a fixed member with the fixed part of the clamp, doesn't it?

Mr. Morris: Objection to that, Mr. Gold. I think it is quite obvious that those are two separate parts, are they not? And what type of a fixed member are you talking about, when you say it becomes a part of the fixed member?

Mr. Gold: I believe this man can tell us whether or not it is a fixed member of the clamp, if they don't operate together.

Mr. Morris: Is your question that the clamp becomes a part of the beam or that the beam becomes a part of the clamp? Is that the question?

Mr. Gold: Yes, sir, the clamp becomes a part of the beam.

Q. (By Mr. Gold) Is that right, Mr. Hunter? A. I am not sure I understand the question. It can still be taken off. It isn't an immovable part.

Q. But in operation in effect they become one? A. It is rigidly attached to the square tube.

Q. You lubricate the pivot pin, do you not, in the 100 series? A. Yes, there is a grease fitting on the hinge member.

Q. Is that pivot worn considerably in use in the field? A. No. We have had very good service performance.

[165] Q. You haven't seen any that were loose? A. Not excessively.

Q. How much looseness would it have to have to be excessively loose? A. That would be a matter of opinion, I imagine. One man would call one loose, someone else could call it tight. It would be hard to define.

Q. What would you, as an engineer for Deere & Company, call this particular piece of equipment?

Mr. Morris: Your Honor, I object to that as not being material or relevant to any issue in this lawsuit. I don't believe there is anything in this patent about looseness or excessive looseness or rigidity or anything of that sort.

Mr. Gold: Your Honor, the man said—

Mr. Morris: Furthermore, it calls for a conclusion and opinion of this witness upon a matter which cannot be defined.

The Court: I don't see where it is relevant.

Mr. Gold: I will withdraw the question.

Q. (By Mr. Gold) I believe you stated that the shank and hinge member swing as one around the pivot point, pivot pin? A. Yes.

Mr. Gold: You may examine.

[166] Cross-Examination by Mr. Morris.

Q. Mr. Hunter, you were asked a question here by Mr. Gold as to whether or not the pivotal action of the shank in the 100 series Deere device is substantially the same as the pivotal action of the shank in the Deere 650 device. You remember that question, do you not? A. Yes.

Q. And I believe it is your testimony that it was? A. Yes.

Q. You were further asked as to whether or not the pivotal action of each of those shanks in the two Deere structures was essentially the same pivotal action as that in the Graham 798 patent that is here in issue and I believe you answered that yes. Is that correct? A. Yes.

Q. Mr. Hunter, if we take in the plow art here the various types of spring clamp mountings which are designed for mounting a shank to a plow frame member, so that the shank will have pivotal action, that is, so that it can pivot and return to a normal operating condition, would the same thing be true? That is, that the pivotal action of the shank in all of those structures which have been here referred to such as the original [167] Graham 811, the Jeoffroy and the Deere, be substantially the same? The pivotal action, that is all I am talking about at the moment. A. Yes, the pivotal action would be the same.

Q. In all of them, whether it be on the original Graham 811 or the Graham 798 patent structure or the Deere structure, is it true that the shank has a normal home based position, which would be called normal operating position, and that there is an arrangement which permits that shank to pivot when it encounters an obstruction

such as a rock, clear the obstruction and then return to its normal position? A. Yes, that is correct.

Q. And in that broad sense of a pivotal action, all of them are essentially the same, are they not? A. That is correct.

Q. Now, I want to make it crystal clear, of course, that I am not talking about in that analysis the specific detail of structure. We are talking about the broad pivotal function of the devices. A. Yes.

Q. All right. Now, just two or three other items, Mr. Hunter, and I will reserve most of this examination for our direct case.

In 1953, when you were assigned the design [168] task of designing the Deere 650 or that is the implement which ultimately was the Deere 650 implement, was that job confined to the design of a spring clamp, or was it a design of a complete plow, including frame members, wheels, levers, lifts, and so on? A. It was a complete project for a new tool carrier.

Q. All right, sir, and did that involve the designing of clamps for the fixed type attachment to the beam as well as the pivotal or spring type attachment? A. Yes. We developed that at the same time.

Q. And it just so happens that we have here involved in this case the problem which relates to the design of the spring clamp type of attachment that went into that structure? A. Yes.

Q. And is the same thing true when you came to the design of the 100 tool carrier in 1958, was it a complete job of a complete tool with all of its parts or was it merely a spring clamp design job? A. It was a complete tool of the complete parts and the spring standard arrangement.

Q. Just one other question at this point. Let's consider for a moment the geometry of the spring steel shank or standard and the forces that are involved or the forces that that shank is subject to in operation. We [169] have talked here awhile ago, on Mr. Gold's examination, about the rearward forces in the shank and the upward forces in the shank and the loadings, how those are transmitted into the clamp structure and in turn to the beam of the plow, have we not? A. Yes.

Q. Now then, insofar as the forces on the shank itself are concerned, does it make any difference whether the shank is pivoted above or below? Now think with me, please. The forces on the shank itself, as distinguished from the forces on the other parts of the structure. A. No, sir, it should make no difference to the standard. The standard, the chisel point at the lower end I am sure would have no knowledge of whether the pivot point was above or below the standard.

Q. And when we talk about a design which more effectively transmits the forces into the structure, we are primarily talking about the problems of stresses and strains and the transmissions of forces through these other parts into the frame of the plow, which is going to carry those forces, isn't that true? A. That is correct.

Mr. Morris: All right, sir. I will reserve the rest of the examination of this witness for our case.

[170] Re-Direct Examination by Mr. Gold.

Q. Mr. Hunter, Mr. Morris was holding this clamp, Defendants' Exhibit 6, which is marked the Graham 811 clamp, before you when he was asking you if you didn't mean that the pivotal action of all these clamps would be the same. Is it not one—

Mr. Morris: I believe I did not ask him if the pivotal actions were the same. I believe I asked him if they were not substantially or essentially the same.

Q. Is that the one you had before you? A. It appears to be.

Q. Do you know how the pivotal action is on this particular clamp? A. Yes.

Q. Will you tell us how it is? A. Well, when the resisting force is increased at the lower end of the standard on this device, the standard assumes a hinging action which would tip the forward end down and compress the spring.

Q. And where would the fulcrum point of the shank be during that movement? A. The fulcrum point on this device is the lower rear lip of the fixed member.

[171] Q. That is the lip up here (indicating)? A. Yes.

Q. Not this pin, is it? A. No, the standard itself would pivot about the lip I described.

Q. The hinge member would pivot about the pin, the hinge pin, wouldn't it? A. Yes.

Q. And the shank would pivot about the lower edge of this fixed member? A. Yes.

Q. Is that the type of pivotal action that you have in the structure shown in Defendants' Exhibit 46? A. In general that is. It permits the lower end of the standard to move rearward and upwardly.

Q. The shank pivots in this case of your structure, 100 series, about the pivot pin, doesn't it? A. Yes.

Q. And so does the hinge member pivot about the pivot pin? A. Yes.

Q. That isn't what you said about this structure, Defendants' Exhibit 6, is it? A. The standard pivots in the same manner.

Q. Pivots in the same manner even though at different points? [172] A. The lower end of the standard moves to the rear and upward in both cases.

Q. Oh, that is what you meant in your answer to Mr. Morris, that the standard moves upward at the rear end in all of these cases? A. That was the general idea of the standard motion, yes.

Q. And you weren't saying that the pivotal action that is present in the 811 structure as shown in Defendants' Exhibit 6 is the same as in your 100 series or 650 series? A. We were talking about the general motion of the standard itself.

Q. And you were saying the same thing when you say it made no difference whether the pivot was above or below the shank?

* * *

[173] A. I am not sure I am clear on your question. I assume you are referring to the action of the standard?

Q. (By Mr. Gold) That is what we were talking about a minute ago, wasn't it? A. Yes.

Q. And so when you refer to the same thing, it would be assumed that I was referring to that action, wouldn't it? A. Yes.

Q. Now, were you referring to that same action when you said it made no difference whether the pivot was above or below the shank? A. Yes.

Mr. Gold: That is all.

Mr. Morris: No further questions.

(Witness excused.)

---

F. C. FENTON, called as a witness on behalf of the plaintiffs, was duly sworn and testified as follows:

Direct Examination by Mr. Gold.

Q. Mr. Fenton, please state your name and residence. A. F. C. Fenton, Manhattan, Kansas.

Q. What is your age? A. Age 70.

[174] Q. In what business are you engaged? A. I am a retired professor of agricultural engineering.

Q. Where was your last employment, Professor? A. At Kansas State University.

Q. What was your last position with the college? A. I was professor and head of the Department of Agricultural Engineering.

Q. What did you do before you went to Kansas State as a professor? A. Well, I worked at the Iowa State University for two years, then I worked for the University of Missouri for a year, and after World War I I returned to Iowa State for 11 years as a teacher and research worker in the Department of Agricultural Engineering.

Q. The Iowa State College is the one at Ames, Iowa? A. Yes.

Q. What degrees do you hold? A. Master's, and Master's degree from Iowa State.

Q. Do you belong to any engineering societies or organizations? A. Yes, sir.

Q. Would you tell us some of those. A. ASAE, that is the American Society of Agricultural Engineers. The American Society for Engineering Education, Registered Professional Engineer in Kansas, [175] and a National Professional Registration for Engineers.

Q. Did your duties at Kansas State College require you to be familiar with agricultural machines or equipment? A. Yes, sir.

Q. Are you familiar with what we call chisel plows? A. Yes, sir.

Q. Does Kansas State College own or operate any such plows? A. Yes. We have had such plows on our branch stations in western Kansas for 20 years, more or less.

Q. And your work would take you to those branch stations? A. Yes.

Q. I have heard of farm implements called cultivators. Is there a difference in cultivators and chisel plows? A. The principles of operation are similar, but the cultivators are shallow operating tools and are mainly intended to kill weeds and to find the surface of the soil.

Q. I have also heard of harrows. Is that similar to cultivators or chisel plows? A. They are an even lighter duty machine than a cultivator. The harrow is to break up lumps, clods, smooth the surface, cover seed, fine seed, and similar operations.

Q. Harrow would be to smooth it up on top for a seed bed? A. Yes. It also kills very young growing weeds and is [176] useful in that respect.

Q. Have you read the Graham patent No. 2,627,798, the patent in suit? A. Yes, sir.

Q. Do you know what the patent shows and describes? A. Yes, sir.

Q. Have you before this time had occasion to read copies of patents? A. Yes, on numerous occasions.

Q. Have you appeared and testified as an expert in patent suits involving agricultural equipment? A. Yes.

Q. Could you name some of those suits? A. I appeared on a case between Gleaner and J. I. Case relative to combines. Also appeared on a case between Minneapolis-Moline and Massey-Harris on combines. There was another one I recall from the Superior Separator Company of Minneapolis and the Ottawa Implement Company of Ottawa, Kansas. Then of course I have appeared on two previous cases related to these spring clamps.

Q. You were the expert witness for the plaintiff in the Graham versus Jeoffroy case that involved the 811 patents? A. Yes, sir.

Q. Also in the suit, the next suit that involved both the [177] 811 and 798 patents? A. Yes.

Q. You were also the expert in the contempt case between Graham and Jeoffroy, were you not? A. Yes, sir.

Q. Have you seen clamps such as involved in the present suit in operation? A. Yes, I have.

Q. Have you examined spring clamps manufactured and sold by the defendant, the Deere Company? A. Yes, sir.

Q. Have you read and do you understand the claims of the Graham patent in suit? A. I believe so. I have read them and I believe I understand them.

Q. Do you have a copy of the Graham patent in suit? A. Yes, sir.

Q. That is Plaintiffs' Exhibit A. What does the patent in suit say relative to the invention or structure, what it relates to? A. That would perhaps be the opening statement of the—

Q. Yes, read the first paragraph of the patent. A. "This invention relates to a plow of a type including ground conditioning tools that are carried on shanks having support on a mobile frame and which work under [178] the surface to heave and break the soil and form alternate ridges and furrows having exposed surfaces composed of sod, straw and clods normally occurring on a field.

"When the field contains rocks and other obstructions, it is desirable to mount the shanks of the ground working tools for rocking movement on the frame of the plow so that the ground working tools will pass freely over the obstructions and return to normal plowing position without injury to the plow."

Q. Now, you read both the first and second paragraph, I believe, didn't you, Mr. Fenton? A. Yes, sir.

Q. Does that suggest that it is to work like a cultivator or is there some kind of different work?

* * *

[179] A. All tillage tools cultivate the soil, but this plow is intended for deep tillage, to move more soil—

Mr. Morris: Object, Your Honor, the answer is not responsive. The question is whether or not this language that he has just read from this patent suggests anything about cultivation as distinguished from plowing, not what this witness's opinion about these plows may be, about these machines.

A. I didn't so understand your question. I understood you were asking my opinion on how this particular device works.

[180] The Court: No, I don't think that was the question, Mr. Fenton.

Q. (By Mr. Gold) The question was relating to the language as to what it would suggest as to the type of plowing or operations, and would that be like a cultivator? A. It is more work on the soil and disturbs the soil more than a cultivator. That is the main difference.

Q. I believe what you read referred to ridges and furrows. Can you tell us why it might be desirable to plow the ground and break it up to form those ridges and furrows?

Mr. Morris: Your Honor, I think we have gone far enough with this business about the type of plowing. The issue in this lawsuit is whether or not this clamp patent is infringed, whether or not these Deere devices infringe this clamp patent, and there is nothing in this patent that says anything about the type of plowing that is done, there is no issue in this lawsuit about the type of plowing that is done. The question is a structure and performance of clamps.

I object to the question as immaterial to any issue in the case.

Mr. Gold: If your Honor please, the function of these clamps is to support tillage tools that are to [181] do chisel plowing, and that is the very important type of plowing that we are concerned with here. It is these clamps that make it possible to do that chisel plowing in the rocky territories.

The Court: Is your question to him for the purpose of showing the status of the prior art in this field? And if you are making an attack upon that itself, that will be one issue in the case.

Mr. Gold: Of course what I had in mind was his opinion of what the patent related to and if it relates to that type of equipment and the function of the equipment that is claimed here, and I was developing the actual purpose of the equipment that is involved in this suit, the clamps that hold those ground working tools.

Mr. Morris: I will withdraw the objection, Your Honor. It is immaterial, but I don't want to interrupt this case.

The Court: Very well.

Q. (By Mr. Gold) Can you tell us why it might be desirable to plow the ground in formed ridges and furrows? A. The operation of these plows has been imminently successful in the fact that –

Mr. Morris: Object to that as not responsive.

A. I think it will be if you will allow me to finish.

[182] The Court: Well, he is testifying as an expert. You may continue.

A. Because the formation of ridges and furrows permits the entrance of rainfall at a higher rate and in the semi-arid regions of the west has been beneficial, storing moisture, and preventing blowing, and generally beneficial as a tillage practice as contrasted to the moldboard plow and other tillage tools which were in vogue years before that.

Q. (By Mr. Gold) Now, we have talked about the rocky territories. If a farmer was plowing a rocky farm would he leave the rocks on the farm or would he remove them? A. Well, he might do both. Some remove them, some work over them, and they are short of time, so they don't get the rocks all removed at once.

Q. If the farmer removed the rocks from his farm, the rocks that he turned up, would he later be apt to find other rocks? A. That has been the experience of farmers throughout the rocky regions, that more rocks become available or in contact with tillage tools on the surface as the years go by.

Q. You mean that after you have cleared all the rocks away, and you can till the soil without striking [183] rocks, later on you may strike some? A. That is right.

Q. What would be the cause of that? A. That is a controversial question. Personally I think erosion is the main cause, but also there is the theory that the frost action, the heaving of the soil, moves the rocks upward in the soil.

Q. Does the patent specification give the purpose of the invention in this device? A. Yes.

Q. The Graham invention device? A. Yes.

Q. Would you read those for us, please. A. "It is therefore the principal object of the present invention to provide a simple and reliable mounting for attaching the shanks of the ground working tools to the mobile frame whereby the shanks may rock when necessary and vibrate under action when the plow is working in rocky and/or heavy soils. It is also an object of the invention to provide a mounting which includes a fixed part and a movable part pivotally connected with the fixed part and having a shank attaching portion to which the shank is rigidly secured and resiliently retained on the fixed part."

Q. That was the third paragraph of Column 1 of the patent [184] specification? A. Yes, sir.

Q. Now, will you turn to Column 2 on page 1, and starting at the middle of line 17 would you read the next sentence, please. A. "The shank 2 is formed of metal bar stock of a substantially rectangular cross section and is of a width and thickness to provide the necessary strength and a certain amount of resiliency."

Q. Now, when you say the shank 2, where would you find that numeral? Does that have any reference to any part of the patent? A. Yes, sir, you would refer to the drawings and the shank would be numbered there.

Q. Does that appear in different figures of the drawings? A. Very likely.

Q. These shanks that I have been lifting around here are pretty heavy. Would they still have the resiliency mentioned in that portion of the specification? A. Well,

the resiliency is inherent in their structure. Under stress they will have resilience.

Q. In the Graham 798 structure, what secures the shank to the hinge member? A. There is a bolt at the forward end which bolts the shank to the hinge member. There is also restraining [185] means at the rear of the hinge member, which is in the form of a stirrup, which also results in a restraining action.

Q. In the particular structure shown in Fig. 2 of the drawings of the Graham patent in suit, the spring bolt goes through the shank, does it not? A. Yes, sir.

Q. Also through the plate? A. Through the plate.

Q. The plate of the hinge member? A. Yes, sir.

Q. Could the spring bolt keep the shank from being pulled out of the clamp? A. Yes, it could.

Q. And why is it necessary to use another bolt? A. It may not be necessary, but it was deemed desirable in this patent. It gives a more rigid connection. The spring bolt must have some clearance to function properly and therefore it cannot give a rigid connection.

Q. Now, if you will turn to Column 4, that is on page 2 of the patent specification, and starting with the sentence beginning in the middle of line 34, will you read that sentence, please. A. "The fastening device 56 is then inserted through the registering openings 54 and 55 to secure the shank to the [186] movable part of the mounting."

Q. Now, that bolt 56, which one is that, 56, that you are referring to? A. It is shown best in Fig. 2 of the patent drawings.

Q. Now, where would that be, which bolt are you referring to? A. I am referring to the bolt on the right-hand lower part of the drawing which is labeled number 55.

Q. You mentioned a restraining member at the rear of the hinge member, I believe. What is the purpose of that member? A. That member supports the shank when it is out of the ground and not working, and probably under shock the recoil action after the shank has passed over an obstruction it will help to restrain the shank.

Q. Would that be something like the rebound that Mr. Hunter was commenting about? A. Well, I think so. Rebound is commonly understood.

Q. Was there any particular part of the shank in the Graham patent that permitted it to flex? A. What?

Q. Is there any particular part of the shank in the Graham 798 structure that is permitted to flex? A. There is nothing to prevent it all from flexing. It can all flex.

[187] Q. When you say all you mean throughout its length? A. Yes, up to the bolt which attaches it to the fixed member.

The Court: You mean throughout the length of the shaft?

Mr. Gold: Of the shank, yes, sir.

The Court: The shank, yes.

Q. (By Mr. Gold) Has the particular arrangement of the hinge member and the shank anything to do with the flexing throughout the shank's length? A. It undoubtedly does have, yes, sir.

Q. Does it make any difference in regard to the direction in which the forces are applied to the shank relative to the plate portion of the hinge member? A. Yes, sir.

Q. Do you think that arrangement is a feature of the Graham invention? A. I think it very definitely is a feature of the Graham device.

(Plaintiffs' Exhibit L was marked for identification.)

Q. (By Mr. Gold) Mr. Fenton, I show you a chart which has been marked for identification as Plaintiffs' Exhibit L. Do you have a copy of that chart? A. Yes, sir.

Q. Will you get it out, please.

[188] Mr. Fenton, I believe you now have a chart that has been identified as Plaintiffs' Exhibit L. Did you have anything to do with the preparation of that chart? A. Mostly in a consulting capacity. I was present and discussed it, helped select colors. I did not draw the chart.

Q. When you say you consulted, you mean consulted with plaintiffs' attorneys? A. Yes.

Q. I note there are a number of different colors used on portions of the chart. What do those different colors purport to indicate? A. They are indicative of the different features, different mechanical features of the clamp, so that they can be easily recognized and separated from each other.

* * *

Q. (By Mr. Gold) Tell us what is shown on the Exhibit, Plaintiffs' Exhibit L. A. On the left-hand side there is shown the exact reproductions of the drawings of the Graham patent 798, along with the numbers designating the different [189] parts as they are described in the specifications. These are colored in different ways so that the separate parts are easily discernible.

On the right-hand side of the sheet are pictorial representations of the Deere 650 clamp, also colored to show parts which are similar to those in the Graham patent.

On the center, and printed, center of the sheet and printed is a copy of Claim 1.

Q. Of the Graham 798 patent? A. Of the Graham 798 patent.

Mr. Gold: If Your Honor please, there are four sheets of drawings in the Graham patent, and these figures at the left are reproductions of the first sheet and the fourth sheet. The lower part of the first sheet of drawings has been cut off and the top of the fourth sheet has been cut off so that they would get on this space. Otherwise they are reproductions of those two sheets of drawings.

Q. (By Mr. Gold) Now, in this structure as shown in the Graham 798 patent is there a tool or something carried on the lower end of the shank? A. Yes, sir, there is a chisel indicated.

Q. That would be the chisel at the lower end of the shank, the chisel marked 3 in the drawing? [190] A. Yes, sir.

Q. And is there an illustration of some kind of a frame or tool carrying structure in the Graham 798 patent? A. Yes, sir. The H-beam, which is indicated in all of these—at least three of the illustrations—is the frame.

Q. What color is the frame in the drawings on the chart, Plaintiffs' Exhibit L? A. The frame is colored in blue.

Q. Will you read Claim 1, element by element, and point out where the structure of the Graham disclosure reads on that claim? A. "In a plow having a frame and a ground working tool provided with a shank adapted to rock relatively to the frame when the plow is in operation in a forward direction, a mounting"—

Q. Just a minute. In the part you read I believe there were some colored boxes. Will you tell us what those colors mean? A. The first one on the word "frame" is colored blue, and we have already pointed that out. The shank is colored green. The lower part of the drawing, there is a portion of the shank also colored green.

Q. All right, sir. Now will you continue to read the [191] claim, please? A. "a mounting for pivotally attaching and supporting the shank of the ground working tool to a transverse member of the frame, the mounting including 1. a fixed member adapted to be fixed to the transverse member of the frame."

This is shown in yellow in the Graham drawing. It includes plates which fit on the bottom of the H-frame. It also includes the plate at the top with a hooked member, which is bolted to the lower member of the fixed member, the lower part of the fixed member, and also includes a set screw on the left-hand side labeled number 16, which further attaches the fixed member to the frame.

Sub-heading a. "a longitudinally extending underface terminating forwardly of the transverse member to which said mounting is adapted to be fixed."

Q. Will you point that out, please, on the Graham structure, Mr. Fenton? A. Underface is shown best in Fig. 2 and of course is just above the red hinged member and in contact with the hinged member. It is a straight flat face.

"the fixed member having

"b. ears extending rearwardly from said underface at the sides thereof." These are colored in orange—[192] no, the ears are part of the fixed member and therefore

colored in yellow. They are best shown, I think in Fig. 7 under the number 26 and 27. There are two ears. That would be patent terminology. An ear is an extension from the main body, used in this patent.

Q. Now, will you read the next element of the claim and point out where it is found in the Graham structure? A. Element No. 2 is "a shank attaching member having—

"a. An elongated plate portion," which is shown in red, two views, a view in the unit there in Fig. 2 and also a separate showing of that element portion in the lower part of the illustration. "plate portion provided with

"(1) an upper face corresponding with and normally in contact with said underface of the fixed member."

This contact between these two faces is shown by number 11 in Fig. 2, which refers to the line between these two members, the red member and the yellow member.

The Court: Just a minute. I don't find that. You say number 11?

A. Yes, number 11 in Fig. 2.

The Court: I see.

Q. (By Mr. Gold) Mr. Fenton, step to the easel and point out the parts as you read them. Maybe the Court could [193] follow it better.

The Court: That is the point of contact—

A. Point of contact between the upper face of the shank and the underface of the fixed member.

The Court: That would be with the shank or with the fixed member.

Q. (By Mr. Gold) Will you read that element of the claim again and point out where you find it, Mr. Fenton? A. (1) under a. "an upper face." This is the elongated plate portion which is provided with "an upper face corresponding with and normally in contact with said underface of the fixed member."

That is this point between the red and the yellow. I had passed over it before.

Q. All right. Now read the next part of that. A. "and provided with

"(2) a longitudinally extending underface in engagement with a corresponding upper face of the shank

whereby the plate portion of the shank attaching member is between the shank and the fixed member." The plate portion is shown in red, the shank in green, the two are in contact along this line (indicating), and the plate portion is between the shank and the fixed member.

Q. You were pointing to Fig. 2 of the drawing shown on the [194] chart in Plaintiffs' Exhibit L, is that right? A. That is right.

Q. Now, will you read the next one? A. Element 3, "means connecting the elongated plate portion with the shank for maintaining the upper face of the shank in constant continuous contact with the underface of said plate portion of the shank attaching member." This element is shown in gray and is the bolt which attaches the shank to the plate member at the forward end.

"4. a transverse pin pivotally connecting the shank attaching member to the fixed member at the rear ends of said normally contacting faces and whereon the shank attaching member pivots upon rocking movement of the shank." This is shown in brown and is best shown in this particular location where the pin extends through the openings in the ears. It is also shown in cross section in Fig. 2 at this point (indicating).

"5. a coil spring having one end seated on the forward end of the fixed member." The coil spring is shown in orange and is seated here on the forward end of the fixed member.

"6. means having connection with the forward end of the shank and with the other end of the coil spring whereby the spring yieldably maintains said [195] normal contact of the upper face of the plate portion of the shank attaching member with the underface of the fixed member to maintain the normal plowing depth of the ground working tool." This is the bolt which in the Graham patent has a "T" connection across the bottom which bears on the bottom of the shank through the washers or plates at the top and the nuts for compressing, tightening or loosening the spring.

Q. Does that claim have any requirements for the length of the upper face—of the longitudinally extending underface of the fixed member? A. No, it doesn't men-

tion any length. It says that it terminates forwardly of the transverse member. That is the only designation.

Q. Now, I believe that it mentioned an upper face of the plate portion in contact with the underface of the fixed member. Can you tell me the purpose of the contact with those two faces in the Graham 798 structure? A. The main purpose of that contact is to provide a stop engagement for the spring. That is, the spring is tightened, providing compression to urge the shank upward and hold the ground working tool in position. This contact provides the stop engagement.

Q. Is there any part of that claim that further indicates [196] the purpose of those faces? A. No, sir, I do not find such.

Q. What would be the reason for having some stop for any normal position of the tool? A. Well, the tool must be controlled to a certain depth in the ground to work properly. When you have a plurality of tools you like to have them all reasonably close in their adjustment in the ground.

Q. Would that have anything to do with what we have referred to as suction? A. Suction is a part of some tools, particularly the sweep. The chisel has little—not a lot of suction, some of course. All tillage tools except the harrows have some suction to help hold them in the ground.

Q. You say that suction is to help hold them in the ground? A. Yes, to help them enter the ground and help hold them in the ground.

Q. Now, I believe you said that the illustrations on the right of the chart, Plaintiffs' Exhibit L, was of the Deere structure, is that right? A. Yes, Deere 650 spring clamp.

Q. Would that be a structure such as we have in this one, identified as Plaintiffs' Exhibit I? However, this one has the springs removed. If the springs were put back on it would that be the structure like is shown [197] on the drawing? A. Yes, sir, that is the structure.

Q. Now, Mr. Fenton, will you please read Claim 1 of the Graham 798 patent, element by element, and compare it with the Deere 650 spring clamp structure, as shown on

Plaintiffs' Exhibit L? A. Starting with No. 1, "a fixed member adapted to be fixed to the transverse member of the frame." This member in the Deere includes this box-like structure in the lower part, together with the bracket which is bolted to the lower part by two heavy bolts. The fixed member having "a. a longitudinally extending underface terminating forwardly of the transverse member to which said mounting is adapted to be fixed." This fixed member has only a very small horizontally extending underface, which is the face of this nub or projection extending down to form the contact.

Q. Mr. Fenton, I didn't hear you read the introductory part of the patent. A. I thought it was perhaps unnecessary to read that.

Q. I think you ought to start with the beginning of Claim 1. A. "In a plow having a frame and a ground working tool provided with a shank adapted to rock relatively to the [198] frame when the plow is in operation."

Q. Will you point out the frame and show the parts in the colors as you read the different ones? A. The frame is shown in blue. This is really the tool bar type of a Deere clamp or unit, and in a way dictates or at least affects the shape of the fixed member because the clamps must be different than they are in the case of this one (indicating). The shank is shown in green or a part of the shank, and the same here (indicating), which extends under the device at that point.

Now I am down to "b."

Q. No, go ahead and read this (indicating). A. "a mounting for pivotally attaching and supporting the shank of the ground working tool to a transverse member of the frame."

Q. Now go on with Element 1. Start at the beginning of Element 1. A. "1. a fixed member adapted to be fixed to the transverse member of the frame," shown in yellow. It includes the lower part, the upper part, the V-shaped notch, the two bolted together with two heavy bolts.

The fixed member having:

"a. a longitudinally extending underface terminating forwardly of the transverse member to which said mounting [199] is adapted to be fixed." The only part that could be described as a longitudinally extending underface is the bottom of this small nib or extension, extending down from the forward end of the fixed member.

Q. I have a part of the exhibit we dismantled yesterday of a 650 Deere spring clamp. Will you point out the face that you are talking about? A. That is this face shown at that point (indicating).

The Court: That lug there?

A. That is the lug, which extends downward, contacts the top of the shank.

Q. (By Mr. Gold) All right. You may proceed. A. "b. ears extending rearwardly from said underface at the sides thereof." These are extensions from the main body of the fixed member, one on either side, which are drilled to receive the pin.

Q. What are the purposes of the ears in the Graham structure? A. The ears are large supports for the pivot pin.

Q. Now, can you point out on this fixed member of the Deere clamp, 650 series Deere clamp, as to the part you referred to on the drawing a minute ago? A. These are the ears (indicating), and there is one on the other side. Enlargements in the casting provide the mounting for the pin.

[200] Element 2. "a shank attaching member having

"a. an elongated plate portion provided with"—the elongated portion is shown in red, as it is in the Graham patent. Here it is shown integral, here it is separated (indicating) in order to show the structure a little more thoroughly.

"plate portion provided with

"(1) an upper face corresponding with and normally in contact with said underface of the fixed member." This element is not present in this clamp because the upper face of the shank attaching member does not contact the underface of the fixed member directly.

The Court: You mean there is space between the two?

A. There is space between the two provided. You can see it in this cross section (indicating), and you can see it better by examining the parts, I think, that part.

"a. a shank attaching member having

"(2) a longitudinally extending underface in engagement with a corresponding upper face of the shank whereby the plate portion of the shank attaching member is between the shank and the fixed member." This shank attaching member has a longitudinally extending underface which is flat, has flat edges. It [201] has a depression here (indicating) but has flat edges approximately a quarter of an inch wide. This member is in contact with the upper face of the shank, and they are so arranged that the shank attaching member is between the shank and the fixed member, as called for by this element. That arrangement is identical with this, with the Deere—

Q. Referring to the illustrations of the Graham structure on Plaintiffs' Exhibit L? A. Yes, sir.

"3. means connecting the elongated plate portion with the shank for maintaining the upper face of the shank in constant continuous contact with the underface of said plate portion of the shank attaching member." That is shown in gray and is the bolt which rigidly fastens the hinge member, shank attaching member to the shank. It also holds this little clip. The additional purpose of that bolt is to hold this little clip in position for locking the portion of the spring bolts.

Q. Now, that bolt you are referring to, that is shown on this portion of the actual 650 series clamp? A. Yes, this is it, and this is the clip right here (indicating).

"4. a transverse pin pivotally connecting [202] the shank attaching member to the fixed member at the rear ends of said normally contacting faces and whereon the shank attaching member pivots upon rocking movement of the shank." That is shown in orange color. It is again at this point, passes through the shank attaching member and to the areas of the fixed member, and is the pivot point on which this shank and shank attaching member pivot.

Q. What color did you say that was shown with? A. Well, it is—if I am not colorblind, it is sort of an orange color, or brown.

The Court: Brown?

A. I guess it is brown. There is little difference.

Mr. Gold: It is kind of hard to distinguish them.

The Court: I see what it is.

Q. (By Mr. Gold) Read the next number. A. "5. a coil spring having one end seated on the forward end of the fixed member," two coil springs, both seated on the forward end of the fixed member, "and

"6. means having connection with the forward end of the shank and with the other end of the coil spring whereby the spring yieldably maintains said normal contact of the upper face of the plate portion of the shank attaching member with the underface of the fixed [203] member to maintain the normal plowing depth of the ground working tool." A slight difference in this element in that the spring yieldably maintains the front portion of the shank with the fixed member rather than, as this states, the upper face of the plate portion with the fixed member.

Q. What is the purpose of the contact of the shank with that lug on the fixed member in the Deere structure? A. The purpose is to provide a stop engagement for the spring, as was pointed out by Mr. Parker yesterday several times. This is the point of contact which controls the angle of the shank and the depth or the penetration of the tillage tool.

Q. I don't believe you actually pointed out the structure that—on the Deere 650 series and the color of those in that last element of the claim. Will you do that, please? A. They are purple. These elements—

Q. Will you tell us what they are? A. This is a U-bolt, a double bolt with a bight or a continuous structure at this point. The springs fit up over these bolts and the washers or plates and nuts attach to the upper part, the lower portion or the bight portion of the bolt held in place by this clip.

Q. The clip also being colored purple? [204] A. It is also colored purple.

Q. Now then, can you tell us the function of the structure of the Deere 650 spring clamp? A. The function of the structure?

Q. Its function and operation. A. It provides a mounting for ground working tool on a frame, which is so mounted that it will pivot around a pivot point and provide a ground working tool to till the soil, and will also provide for movement when it strikes hard rocks or other obstructions or even in harder soil.

Q. Is there any relationship between the movement of the shank attaching member and the shank? A. They operate together. They are bolted together at this point, and in the specifications of the Graham patent it is specifically stated that they operate as a unit closely.

Q. I believe in the claim it says shank attaching member. Is that what we have also been referring to as a hinge member? A. Yes, sir, it is a hinge member in these devices.

Q. And we have also referred to it as a plate member? A. Yes, a plate member.

Q. If the plate member portion of the shank attaching member as shown in red were extended forwardly to the [205] end of the green shank and the lug on the fixed member cut off so it would engage the top of the plate of the hinge member, would there be any difference in the function of the device? A. No, I don't think so.

Q. Would there be any difference in the plowing operation? A. None whatever.

* * *

[206] Q. (By Mr. Gold) Mr. Fenton, can you tell me if there is any difference in operation as far as plowing and the jumping of rocks in the Graham 798 structure and the Deere 650 spring clamp? A. No, sir.

Q. Difference, if any? A. I think there is no essential difference in the way they operate.

Q. I believe you said that they would perform substantially the same, the same result? A. Yes, sir, with similar adjustment of springs and tools, tillage tools, they would perform the same operation.

Q. Does it make any difference in the function or operation of the Deere 650 clamp if the whole fixed member is extended rearwardly to a point beyond the pin mounting holes from what would be if there were just some ears extending outwardly from the structure? A. I don't understand your question.

Mr. Gold: Will you read the question?

(Question read.)

A. This extension on the plate member—

Q. (By Mr. Gold) I am referring to the fixed member, Mr. Fenton. I believe that the Graham structure has [207] some rearwardly extending ears on the fixed member? A. Yes.

Q. Does it make any difference whether those ears extend rearwardly from some other part of the fixed member or whether the whole fixed member would be extended to form a box-like portion? A. It would make a difference in the length of the pivoting member possibly. I really would have to see your drawings to answer that question.

Q. What was the function of the upper face of the plate portion of the hinge member in the structures defined in Claim 1? A. The function of the upper plate portion of the hinge member?

Q. Of the upper face of the plate portion of the hinge member in the Graham structure. A. This furnishes the stop engagement between the hinge member and the fixed member.

Q. Would it make any difference whether the stop arrangement is provided by the faces of the fixed member and the shank from that that would occur if the faces of the fixed member and the plate of the hinge member form the stop arrangement? A. There again it is a question of the design of those hypothetical units that you are talking about. If they [208] are properly designed there would be no difference in the functioning.

The Court: I would like to ask a question in this connection.

In the Graham patent, does the upper part of the hinge member serve the same purpose that the lug does on the

fixed member of the Deere 650 series, so far as providing a stopping action for the shank?

Mr. Gold: That is our position, Your Honor. In the Graham structure the underface of the fixed member is engaged by the upper face of this hinge member and that forms a stop for the hinge member.

Now, the shank and the hinge member move together so that the stop could be the fixed member engaging the shank or could be the fixed member engaging the hinge member. In the Deere structure they have put a lug on the fixed member and arranged the plate of the hinge member a little shorter, so that this lug will engage the shank in place of this hinge member (indicating). Our position is that the hinge member and shank move together and therefore the stop, whether it be on one or the other, would be the equivalent. They operate the same, perform the same function.

Mr. Morris: Now it is being understood that [209]that is your argument?

Mr. Gold: Yes, I believe I stated that was our position.

The Court: You are not agreeing to that, Mr. Morris?

Mr. Morris: Hardly, Your Honor.

* * *

(Noon recess.)

---

[210] AFTERNOON SESSION, THURSDAY, MAY 3, 1962

F. C. FENTON resumed the stand and testified further as follows:

Direct Examination (Continued) by Mr. Gold.

Q. Mr. Fenton, before the noon recess the Court asked a question about stops. I believe when you were reading the claim that you said that you found one element that was not present in the defendants' structure, the 650 clamp, is that right? A. Yes; not literally present.

Q. Do you find anything in the defendants' structure that would perform the function of the element of the claim? A. Yes. The main function of this element which is missing performed a stop service, that is, the spring stop. That is provided here by this additional nub which reaches down from this member and contacts the shank of the plow (indicating).

Q. Are you familiar with the Jeoffroy spring clamp called the HT-5 that has been marked as Plaintiffs' Exhibit C? A. Yes, sir.

Q. Are you also familiar with the Jeoffroy clamp HT-5-A, which has been marked as Plaintiffs' Exhibit D? A. It appears to be the same. If I am familiar with one [211] I am familiar with the other.

Q. Are you familiar with the Jeoffroy structure, which has been marked as Plaintiffs' Exhibit E, and that is the HT-6-AD Jeoffroy number? A. Yes, sir.

Q. Those were the clamps that were involved in the litigation between Graham and Jeoffroy in the past relative to the Graham 798 patent, were they not? A. Yes.

Q. Can you comment as to whether there is any similarity in operation or difference in operation between the defendants' 650 clamp and the Jeoffroy clamps that we have just mentioned?

Mr. Morris: Your Honor, I don't believe there is any issue involved in this lawsuit as between the Jeoffroy clamps and the Deere clamp. The question is whether or not the Deere clamps are in accordance with the teachings of this patent, infringe the claims of this patent.

Mr. Gold: It is true, Your Honor, these clamps here were held to be an infringement in the prior litigation and therefore I think it is of importance to show that the defendants' clamps operate in a similar manner. While the prior decisions are not binding on this Court, I think that this Court [212] should be informed relative to the operation, so you could properly consider the prior decisions in your consideration of this case.

The Court: Of course there is no issue in this case as between the Deere clamp and the Jeoffroy clamp. But in view of the fact of the other litigation concerning the Jeoffroy clamp with the plaintiffs' Graham clamp, I think

it might have some relevancy in this area. Of course it is not binding on the Court and the Court will not accept it as binding.

Q. (By Mr. Gold) Now, can you tell whether there is any similarity in the operation of the defendants' 650 clamp and the Jeoffroy clamps? A. So far as I can tell, and I have watched them operate many times, the Jeoffroy clamp many times, there is no difference in operation. They operate in a very similar manner.

* * *

Mr. Morris: Excuse me. Let me understand that answer, please. Is the testimony, Mr. Fenton, that you see no difference between the Jeoffroy clamp [213] which has just been identified and the Deere 650? A. In operation.

Mr. Morris: In operation?

A. Yes, sir.

Mr. Morris: All right.

Mr. Gold: I have a chart which has been marked for identification as Plaintiffs' Exhibit M.

(Plaintiffs' Exhibit M was marked for identification.)

Q. By Mr. Gold) Mr. Fenton, we have placed on the easel a chart that is marked for identification as Plaintiffs' Exhibit M. Will you tell us what is on that chart? A. In a similar manner, on the left-hand side are the drawings of the Graham patent 798, the center is Claim 1 of the Graham patent, and on the right-hand side is a pictorial drawing of the Deere 100 clamp.

Q. As far as the illustration of the Graham patent drawings and the claim, they are identical to what was on Plaintiffs' Exhibit L? A. Yes, they are identical.

The Court: You say yes, they are identical?

A. Yes, sir

Q. (By Mr. Gold) Then the difference between this chart, Plaintiffs' Exhibit M and the chart, Plaintiffs' Exhibit L, is the illustration of the accused Deere clamp? [214] A. Yes, sir.

Mr. Fenton, I have a clamp that has been identified as Plaintiffs' Exhibit J. Will you look at that and tell

us whether or not that is the structure that is illustrated on the right side of the Plaintiffs' Exhibit M? A. Yes, sir, it is.

Q. Now, if you will take the pointer, Mr. Fenton, and will you read the elements of Claim 1, or read the claim, element by element, and compare it with the Deere 100 spring clamp, pointing out where you find or don't find any of the elements in that structure? A. "In a plow having a frame and a ground working tool provided with a shank adapted to rock relatively to the frame when the plow is in operation in a forward direction."

The frame is shown in blue and is a box frame, generally known as a square box frame. The shank is shown in green, and is partially cut off here.

"a mounting for pivotally attaching and supporting the shank of the ground working tool to a transverse member of the frame." The mounting to the fixed member in this case consists of three bolts, three heavy bolts, one above the square beam and two below, and of course it is mounted for pivotally [215] attaching as will be shown by the subsequent elements. "the mounting including

"1. a fixed member adapted to be fixed to the transverse member of the frame," shown in yellow, including the bolts and these two separate castings which clamp to the sides of the box.

This fixed member having:

"a. a longitudinally extending underface terminating forwardly of the transverse member to which said mounting is adapted to be fixed."

Now, on first look at that you would say that element was not present. But upon examination you find that this clamp, without the frame, has no stop engagement whatsoever and therefore it is inoperative without the use of the square member.

Now, when this clamp is fixedly mounted on the square member and is included as part of the fixed member, it has, as specified under "a", "a longitudinally extending underface terminating forwardly of the transverse member to which this said mounting is adapted to be fixed." So with that assumption, I would like to make this very clear, with that assumption, that this square member is

essential to make this an operative unit, because it provides the stop engagement for the spring, we are justified in claiming that this [216] longitudinal extending member under the frame constitutes the element here called for.

"b. ears extending rearwardly from said underface at the sides thereof." They are shown in this drawing at the rear of this right-hand element of the fixed member, an enlargement of that casting to provide the pivot pin.

Q. Will you show us those ears on this structure? A. They are right here (indicating), the other on the other side.

Q. Now, you were speaking of the underface that you were using. Can you also point out the underface on this actual device, that you are referring to? A. This face here, beneath these two lower bolts—between the lower bolts.

The Court: That is the under part of the frame?

A. That is the under part of the frame, yes, sir. But it also provides the stop.

"2. a shank attaching member having

"a. an elongated plate portion provided with

"(1) an upper face corresponding with and normally in contact with said underface of the fixed member." The shank attaching member has an upper face here in the center portion, which is normally in contact [217] with the underface of the square beam which, as we said under the previous element, is assumed to be the fixed member. This is shown in red in this illustration.

"(2) a longitudinally extending underface in engagement with a corresponding upper face of the shank whereby the plate portion of the shank attaching member is between the shank and the fixed member." This hinged member has a longitudinally extending underface which is in contact with the shank, and the hinged member is between the shank and the fixed member.

The Court: Just a moment. In that connection let me ask a question. This hinge or pivot part of the device in the Deere 100 spring clamp, does that fit inside the fixed member or on the outside of the fixed member?

The picture would indicate it would be on the outside of the fixed member.

A. The hinged member fits between these ears of the yellow or fixed member.

The Court: That is what this drawing would indicate. But this picture up here at the top of the—

Mr. Gold: If Your Honor please, that is a longitudinal section, taken through the clamp. It would be just like you would split the clamp right through the middle.

The Court: I see. Very well. That answers [218] my question.

Mr. Gold: And you will note also, sir, that the spring bolt does not show going through a hole in the fixed member in that view because that is taken between the springs. It does go through the bolt into the shank because that is in the center, as you will notice here. So it is just like a plane that cuts right through the center of this clamp.

The Court: That bolt, I guess you would call it the forward bolt that is attached to the shank, that goes through the fixed member and is—that goes through the—

Mr. Gold: The hinge member.

The Court: —the hinge member. Very well.

Mr. Gold: And that is this bolt here (indicating) that goes through the red and the green portions in the cross sectional view.

The Court: The one that is colored in red?

Mr. Gold: Yes, sir. Now, if I may, sir, this is the fixed member on each side where the bolts go through. This flange is on the hinge member. This hinge member extends from between these ears forwardly and then has an upwardly extending portion at the front to which the spring bolts are attached.

Q. (By Mr. Gold) Now, Mr. Fenton, will you proceed with [219] the claim. A. I think I was talking about No. 2 under Element No. 2.

Q. Yes. I believe you had read the sub (1). Now, you are ready to read (2). A. It reads, "a longitudinally extending underface in engagement with a corresponding upper face of the shank whereby the plate portion

of the shank attaching member is between the shank and the fixed member." I believe I had finished that. The underface of the hinge member has a straight face on which the shank fits, and in such position that the hinge member is between the shank and the fixed member.

"3. means connecting the elongated plate portion with the shank for maintaining the upper face of the shank in constant continuous contact with the underface of said plate portion of the shank attaching member." That is the bolt.

Q. Will you speak a little louder? Part of the time you are turning towards the chart on the easel and away from the Court, makes it difficult to hear. A. Element 3 is the bolt shown in gray which connects the red pivoted member with the shank.

"4. a transverse pin pivotally connecting the shank attaching member to the fixed member at the [220] ends of said normally contacting faces and whereon the shank attaching member pivots upon rocking movement of the shank." That is shown here in brown at that point (indicating), also shown here disengaged in the two holes. This is the pivot point of the hinged member.

"5. a coil spring having one end seated on the forward end of the fixed member." This has two coil springs, which fit there on the yellow portion of the fixed member.

Q. Now, when you say the yellow portion, can you give us any better description of what portion you are pointing to? A. Well, it is an extension, a flat extension from the fixed member on the left hand here, portion of the fixed member, which also has these fittings to receive the end of the spring.

"6. means having connection with the forward end of the shank and with the other end of the coil spring whereby the spring yieldably maintains said normal contact of the upper face of the plate portion of the shank attaching member with the underface of the fixed member to maintain the normal plowing depth of the ground working tool." That refers to the bolts, two separate bolts rather than a U-bolt, nuts and the [221] washers here in

the bottom and nuts on the plate and clips there at the top, so that the spring can be compressed.

Q. And what is the function of those springs and bolts? A. The function of the springs is to draw this end of the shank upward to the stop, to enable you to compress the spring to the desired point so that the ground working tool will operate in the way that you want it to operate.

Q. In your opinion, is each and every element or the functional equivalent of Claim 1 of the Graham 798 patent found in the defendants' 100 spring clamp structure as shown in Plaintiffs' Exhibit M? A. Yes, sir, I do, with the assumptions which I mentioned there in connection with "a" under 1.

(Plaintiffs' Exhibit N was marked for identification.)

Q. (By Mr. Gold) Mr. Fenton, we have had a chart identified as Plaintiffs' Exhibit N, and we have one on the easel. Will you tell us what is on that chart? A. The drawings on either side are the same as on the Claim 1, but here we have the language and statement or Claim 2 of the 798 patent.

Q. Otherwise the chart is identical with Plaintiffs' Exhibit M, except for the claim, is that correct? A. That is right.

[222] Q. Now will you read Claim 2 of the Graham 798 patent and compare it element by element with the Deere 100 spring clamp? A. These first two are all the same. Do you want them re-read?

Q. I think it would be best to read them again, Mr. Fenton. A. "In a plow having a frame and a ground working tool provided with a shank adapted to rock relatively to the frame when the plow is in operation in a forward direction." This frame shown in blue, shank shown in green, described by this first statement.

"a mounting for pivotally attaching and supporting the shank of the ground working tool to a transverse member of the frame, the mounting including

"1. a fixed member adapted to be fixed to the transverse member of the frame," showing yellow and very firmly fixed by the mechanism provided, the bolts and the shoulders here for clamping that fixed member to

the box member of the frame. This fixed member having

"a. a longitudinally extending underface terminating forwardly of the transverse member to which said mounting is adapted to be fixed."

Q. Was that the same wording as was in Claim 1, in that [223] part of it? A. Exactly, yes, sir, and I don't know that I can say it exactly as I said it before.

Q. Would you say your comments that you used before would apply to that element of this claim? A. Would apply, yes, sir.

Q. O.K. A. "b. the fixed member having ears extending rearwardly from said underface at the sides thereof."

Q. That is also the same as in Claim 1? A. Also the same, as shown here (indicating).

"2. a shank attaching member having

"a. an elongated plate portion provided with

"(1) an upper face corresponding with and normally in contact with said underface of the fixed member." That face is shown here in this diagram. The front portion of that is the face as shown here to contact the underface of the fixed member and to provide the stop.

Q. And when you said "shown here" you were pointing to the cross sectional view of the Deere's 100 spring clamp? A. Yes, sir.

"b." under the second element, "said [224] shank attaching member having a lug extending upwardly between said ears of the fixed member and disposed at the rear end of the plate portion and above the plane of the underface of the fixed member." We didn't read that in the other case, wasn't on the other claim. But here is the lug in the Graham pivoted member, which extends upward from the plate or the surface of the attaching member. In the Deere 100 clamp this lug extends up here. It is between the parts of the fixed member.

Q. Now, could you say which parts of the fixed member you are pointing to? A. The right-hand section of the clamp of the fixed member, and this opening between the two parts. This lug locates the pivot point at a point

above the plane or contact between the shank and the pivoted member, as shown in this illustration, No. 53, in the Graham patent.

"c" under element 2, "said shank attaching member having depending means embracing the shank at the rear end of said plate portion." This refers to these two bolts and the plate which clamp the shank to the pivoted member, and in the Graham patent it refers to this stirrup through which the shank extends and which provides a support for that shank.

[225] Q. I believe you referred to a stirrup. Could that also be called a loop-like portion? A. Yes, sir, I think that would describe it perhaps better.

Q. And when you were referring to the plate and the bolts, to which structure were you pointing? A. To the Deere structure. The Deere structure does not have the stirrup or a loop-like member. It has a plate and two bolts extending up into the hinged member to which nuts are attached, to clamp this tightly to that member.

Q. Now, will you show us the plate on the cross sectional view of the Deere 100 spring clamp? A. Here (indicating).

Q. The part that you are pointing to is marked red under the green shank? A. Yes, under the green.

Q. Now go to the next element. A. Element 3, "a bolt connecting the forward end of the plate portion with the forward end of the shank and cooperating with the shank embracing means in maintaining the upper face of the shank in constant continuous contact with the underface of said plate portion." That is the bolt in gray at this point, which bolts the forward end of the shank to the fixed [226] member, that is, it cooperates with this embracing means, keeping these two parts in contact.

"4. a pivot pin extending transversely through said lug and carried by the ears with the axis thereof above the plane of the underface of the fixed member whereby the normally contacting face of the shank attaching member immediately moves out of contact with and away from the face of the fixed member when the shank attaching member pivots upon rocking movement of the shank." The pivot pin is shown in brown. Here it is,

and it is shown at that point (indicating). It connects these two parts, that is, the hinged member and the fixed member together forms the pivot. I take it that this "immediately moves out of contact" means that there is no side motion or lateral motion, it just moves right away when the action occurs.

"5. a coil spring having one end seated on the forward end of the fixed member." This is the same as in Claim 1. The coil springs are seated on the forward end of the fixed member shown here in orange. Here are the springs, here they are mounted (indicating). The mounting is provided by these special washers or clips at both the bottom and the top.

[227] "6. means having connection with the forward end of the shank and with the other end of the coil spring whereby the spring yieldably maintains said normal contact of the upper face of the plate portion of the shank attaching member with the underface of the fixed member." Refers to the bolts, of which there are two in number, which pass through the fixed member—I mean pass through these holes in the hinged member and are bolted to—passed through the springs and through the top at that point.

I should point out here perhaps the difference between this and this (indicating).

Q. I want to ask one more question first. You mentioned some washers on which the springs were seated. Are those separate washers that you had reference to or is that part of the fixed member? A. This is machined now, the fixed member—on the top of the fixed member, or cast I should say, so that the spring will fit on that portion.

Q. Now, having read the elements of Claim 2 and compared them with the defendants' 100 spring clamp structure, in your opinion can each and every element of Claim 2 or its functional equivalent of the Graham 798 patent be found in the defendants' 100 spring clamp structure? A. Yes, sir. Certainly the functional equivalent is found.

[228] Q. Mr. Fenton, I will expose the chart, Plaintiffs' Exhibit L, on the easel. You testified regarding

Claim 1 and the 650 structure earlier. In your opinion can each and every element or its functional equivalent of Claim 1 of the Graham 798 patent be found in the defendants' 650 spring clamp structure? A. Why, I testified before lunch that that element cannot be read literally on this other element, on the Graham, can't be read on the Deere, because it is slightly different. They have provided a slightly different stop arrangement, but you cannot claim that they are the same literally. I claim they function similarly and perform similar service, but they are not quite the same. If you are reading the letter of the patent, strictly speaking, they don't quite fit.

Q. What would you say relative to the functional equivalency of the elements of Claim 1 relative to the 650 spring clamp? A. There is no difference in function. Actually, as far as the clamp is concerned it makes no difference whether it provides a stop on the shank which is bolted rigidly to the hinged member, and it is so stated in the patent, that it is bolted firmly to the hinged member. Whether you put your stop on the hinge member or the shank makes no difference in functioning. [229] Mr. Gold: You may ask the witness.

Cross-Examination by Mr. Morris.

Q. Mr. Fenton, you have just completed testifying here as to interpretation of the claims of the patent in suit, the elements of those claims and the reading of those claims upon the two Deere structures. I wonder if I might ask you what you have done in the way of preparing yourself to determine a proper interpretation of those claims. Just tell me in your own words what you have done in the way of preparing yourself to analyze and determine the meaning of those claims and apply them to various structures. A. During the 20 some-odd years that I have been serving as witness on these cases, of course I have had to study claims a lot, and interpret claims. I suppose that was my main education. But I also have watched this device work and witnessed the way it works and where the stop is.

Q. Of course, Mr. Fenton, you have never witnessed the 798 structure operate, because it has never been made

by Mr. Graham or the plow companies, and that is stipulated here in this case. So you have never seen one of those, have you? A. Why, we have a Chinese copy of the patent that has been [230] made by Jeoffroy and it operates the same.

Q. You have seen someone else's, the Jeoffroy structure? A. Yes, sir.

Q. Which has been held by a court to infringe. But that is all that you have seen in the way of operation, which you can say is in accordance with the teachings of these claims, isn't that true? A. Yes. But it is just like it.

Q. All right, let's assume that to be true. The courts have so held. What else then have you done to prepare yourself to interpret these claims? A. Well, lifetime work in machines.

Q. You have told us that already, your years of experience. A. I am telling it again right now, because you have asked me.

Q. All right, sir. Well, I ask you what else. You have told us that. Now what else have you done? A. It is necessary for me to know the functioning of machines, the way they operate, in everyday work, you see.

Q. Yes, the functioning of other machines in everyday work? A. That is right.

Q. Do they tell you something about the interpretation of these words in these claims? A. Why, I certainly think so. It gives you an understanding [231] of machines and the way they operate.

Q. Have you studied the prior art? A. Yes, sir.

Q. Have you studied the prior art as it bears upon a proper interpretation of these claims? A. Yes.

Q. Have you studied the file history in this case? A. Yes.

Q. The history of its progress through the Patent Office? A. Yes, sir, as reported.

Q. Of course you don't know what occurred in the conference between the lawyers and the examiner? A. That is right.

Q. But as far as the file reflects, you have read that you say? A. Yes, sir.

Q. All right. So you are drawing upon your 20 years of experience in testifying and your experience in a lifetime of engineering, and your study of the prior art, and your study of the file history, and the language of these claims. Is that correct? A. That is right.

Q. All right. Now, Mr. Fenton, I would like to get a few matters out of the way here that have been perhaps placed in the forefront that might be confusing as to [232] their significance in this case.

First of all, the matter of chisel type plowing, as it is called, that is something that has existed long prior to the spring clamp that is in issue in this case, hasn't it? A. Somewhat previous, yes.

Q. Well, I believe you stated this morning that in your own personal experience you folks out there at the college had had a chisel type plow for 20 years approximately, and of course there in Kansas, the western part of Kansas, your plow didn't have any spring clamps on it, did it? A. No, not the first number.

Q. The first ones that you had long before these spring clamps had fixed type or rigid type clamps whereby the shank was attached fixedly or rigidly to the transverse frame member of the plow, did it not? A. That is right.

Q. Now typically back in the older days, the shank size was in dimension three quarters of an inch in thickness by two inches in width, was it not? A. Well, it varied in size.

Q. In the older days is that not true?

Mr. Gold: If Your Honor please, I think he should make himself clear as to what date he is [233] talking about, what period of time, be specific.

Mr. Morris: I have identified the time as before the origin of this spring clamp in issue here.

Q. (By Mr. Morris) Back before that time, that means before—I think a date in 1950, was the origin of this clamp. Was the common shank that was used in your experience the three quarters inch thickness by two-inch width? A. There were a number of different types

of shanks used. I wouldn't testify that they were all like that.

Q. Well, I didn't ask you if they were all. I asked you if that wasn't the typical plow. A. They are heavier now than they were in the earlier days. I will agree with you on that.

Q. So in your first experience with them you started with the lighter or smaller size shank, did you not, and over the years those have progressed in size until nowadays the common size shank that is in use is the one-inch thickness, is that not true? A. Yes, one by two.

Q. One by two. All right. Now, the shanks, the original type, the three quarters inch thickness by two-inch width, had in themselves a certain amount of resiliency or spring, did they not? A. Yes.

[234] Q. So that the shank in its operation in the ground, in its cultivating or plowing operation, would have a certain amount of flex or resiliency to flex and return to position, flex and return to position. Isn't that true? A. Certainly.

Q. All right. And the same thing is true with the heavier sized shanks that are now in use, to some extent? A. Yes, sir.

Q. Though perhaps less total resilience than the smaller dimension shanks. Is that correct? A. Yes.

Q. Now then, also the radius of the shanks has changed over the years, in the initial stages 20 years ago the typical radius was a short approximately 16-inch radius, wasn't it? A. There may have been some like those.

Q. Well, you recall those from your testimony in the first Jeoffrey case, don't you, 11 years ago? A. I don't think they were quite that small.

Q. They were smaller in any event? A. They were smaller.

Q. And as the years have gone by the radius of the shanks has lengthened up to 22 inches and even up to 32 [235] inches radius, is that not true? A. Yes.

Q. All right. So insofar as that matter of the plow tool is concerned, the shanks, the shank sizes and the resilient performance of those shanks, that exists regard-

less of spring clamp mountings, does it not? A. Yes, sir.

Q. All right. And today in your own country, that is, typically, the great southern plains area of the country where there are no rocks, the typical mounting of these resilient shanks to the transverse spring members of the plows is by means of a rigid type clamp, is it not? A. I can't tell you about that because I have been told, I haven't made a survey, but I have been told that—

Q. Just a moment, I don't what you have been told. I am inquiring about your own knowledge. If you don't know just say so. A. The sale of spring clamps—

Q. If you don't know that just say so, Mr. Fenton. A. I know it but not in a complete way, the whole country—

Q. Do you only know it by virtue of what you have been told? A. No, not only.

Q. You have been out then and made some surveys? [236] A. I have seen some, yes.

Q. Sir? A. I have seen some and I know that farmers have told me that—

Q. I don't want what farmers have told you, Mr. Fenton. I am asking you for your knowledge about— A. The owner of a spring plow telling me, that is evidence.

The Court: No.

A. It is not evidence? O. K.

Q. (By Mr. Morris) Mr. Fenton, I am asking you about your own personal knowledge as to the use of these plows and the clamping means used. Now, you can tell me what you know about it personally, what you have seen. Let's come back to my main question now. From your own observation in this great southern portion of the Great Plains, the predominant fastening means for attaching the shank to the transverse beam of the plow has been the fixed or rigid type fastening rather than the spring clamp fastening, has it not? A. Yes.

Q. All right, sir. You saw the film yesterday here that was shown before we commenced the actual testimony in this case, and you saw that at least half of the scenes there were of the Graham plows with the rigid type clamps, did you not? [237] A. Yes.

Q. All right. Now then, the rigid type clamps and the type of plowing done by these plows and the performance of the resilient spring shank itself is not an issue in this case, is it? A. No, I think it is not.

Q. It is not. We are talking about a structure of a clamping mechanism for clamping the shank to the frame of the tool, are we not? A. Spring clamp.

Q. All right let's say spring clamp. That is what we are here to deal with, isn't it? A. Certainly.

Q. And all of this history then about who may have been first or a pioneer or otherwise, doesn't have anything to do with the issues upon which you are here to testify, does it? A Probably not.

Q. O.K. Thank you, sir. Now then, I would like to get us oriented completely with some terminology at the outset, so that you and I will be sure we are talking about the same things. We have had some difficulties in past times of understanding each other perhaps, and I would like to avoid any misunderstandings insofar as possible. [238] Let's consider the plows from a general description standpoint. All of them that we have been talking about may be described as having a mobile frame, may they not? A. All that we have been talking about, yes, sir, except your tool bar.

Q. The tool bar— A. Is mobile.

Q. —the one which was integrally mounted to the tractor, it was mobile only in the sense of being attached to the tractor which in turn was mobile? A. Yes.

Q. But typically the type plow we are talking about has a mobile frame, does it not? A. Yes.

Q. And typically it has a transverse frame member? A. Usually.

Q. Or more than one, several transverse frame members? A. Yes.

Q. Now, the tools, the ground working tools that are mounted on those plows normally are mul'iple, are they not? A. Yes, sir.

Q. It is very rarely that you just have one ground working tool mounted on this type plow, and these plows

[239] use, as has been shown here already, a variety of types of ground working tools, do they not? A. Yes, sir.

Q. So it is not accurate to describe these implements as just chisel plows, is it? A. No.

Q. That is just a name which somebody has happened to select and has popularized, but that is not by any means confining or controlling, is it? A. Well, the majority were chisels in the earlier days.

Q. In the earlier days, at the outset when Mr. Hoeme and Mr. Jeoffroy down there first started, that group of people, they had chisel points on these plows, but as they have come to be used, they use chisel points, they use spikes, they use sweeps of varying widths, anywhere from 12 inches to 32 inches, they use devices some places called a duck foot, or some places called a shovel, to do a variety of types of ground tillage, don't they? A. Yes, sir.

Q. And when they are operating with the spikes or chisel points, generally speaking, they plow or cultivate, whatever you want to call it, and I am not particularly concerned about that—in any event, they penetrate the ground somewhat deeper than they do [240] with the sweeps or shovels or duck feet attachments, don't they? A. That is quite right.

Q. With the chisels and spike points in your own territory I dare say the plowing depth or chiseling depth average would be somewhere around seven or eight inches, would it not? A. Yes, sir.

Q. And in the northern countries, at least in the areas where the rocks are not so severe that they can't go that deep, it would be typically about the same with their chisel or spike operation, would it not? A. It might be.

Q. In many areas because of the type of ground, excessive rocks and so on, they may not be able to go quite that deep even with the chisels, is that true? A. That is right.

Q. Now then, upon occasion of course I recognize that these devices have been used for a deeper soil penetrating type of action, in which they may be even put down as much as 12 or 14 inches if the tractor power is sufficient to hold it and if the ground conditions are such that the

point can penetrate. That is true, isn't it? A. Yes, I think it is true, yes, sir.

[241] Q. That is a rather unusual operation for the plows, though, isn't it? A. Relatively, in quantity, yes.

Q. Now then, when we shift to the sweep type ground working attachments, such as I have here in my hand—and in order to make this record complete, I would like to identify this as an exhibit. Identify that as Defendants' Exhibit 49.

(Defendants' Exhibit 49 was marked for identification.)

Q. (By Mr. Morris) The sweep which has now been identified as Defendants' Exhibit 49, Mr. Fenton, is approximately what size would you say? A. 12 inches.

Q. You would call that a 12-inch sweep? A. 12 inches wide, yes.

Q. That is a type of ground working attachment which is commonly used on the plows here involved, is it not? A. Yes, sir.

Q. And with that type of attachment the normal plowing depth or normal ground working depth would be in the vicinity of three or four inches, would it not? A. Yes, even a little shallower.

Q. Even sometimes a little shallower, the primary purpose of that type of operation being to cut the weeds, loosen the soil, create the top mulch and cultivate the [242] surface of the ground, is that not true? A. Leave the trash on the surface mostly.

Q. Does the weeding and leaves whatever trash there is sitting essentially upright, does it not? A. Yes, sir.

Q. All right. Of course you are familiar with the fact that the sweep dimensions go on up to varying sizes and I believe on this particular—these particular types of tools up to around 32 inches, do they not? A. Well, eight feet, some of them.

Q. Well, yes, eight feet, but the 8-foot sweeps call for some special attachments? A. Yes. They are not mounted on these plows.

Q. Not mounted on these plows and they don't use these spring clamps that are in issue in this case, do they? A. That is right.

Mr. Gold: If Your Honor please, I believe it would be best that the source of this sweep be identified. It is a Graham manufactured sweep.

Mr. Morris: That is perfectly satisfactory.

Q. (By Mr. Morris) With all of the sweep type attachments, would it be proper to call the ground working that is done a cultivation, a cultivating operation? A. Oh, yes, I think it is in part at least. It may be also called a fallow operation which is not strictly [243] cultivating because there is no crop there, but it cultivates the soil.

Q. From your experience, Mr. Fenton, let's take a given farmer, do you know whether he would more likely use his Graham-Hoeme plow or his Jeoffroy or his Deere plow more often for the cultivating type work with the sweeps or more often for the chiseling type work with the chisel points? A. Depending on how much he summer fallows. He will use these sweeps more for summer fallowing than he will chisel type. But in the preparation for crop, early spring soil preparation, he probably will use the chisel point. So it depends on his farm management and his organization.

Q. Does it depend on his locale? A. Yes.

Q. Depend on his moisture conditions, weed conditions, and whatnot, will it not? A. Yes.

Q. Would you think it would be fair to say that these tools are used as frequently for the cultivating type of operation with the sweeps as they are for the plowing operation with the chisels? A. I don't have any data on that, actually. Over the country as a whole.

[244] Q. In your own experience, your own observation, what would you think about that? A. Summer fallow with the sweeps is a newer thing, and it isn't as widely accepted yet, but it is growing, and just how far it has grown I can't say. But I would be inclined to say, if I am asked for an opinion, that the chisels are used on more acres at the present time than the sweeps.

Q. Now, you have of course seen both the fixed type or rigid type clamp in use on these plows, and you have seen the spring clamp type of clamp on the plows, have you not? A. Yes, sir.

Q. You have testified, as you have already said, in three other proceedings involving spring clamps, have you not? A. Yes.

Q. And the first one in which you testified involved also the rigid type clamp attachments, did it not? A. That is right.

Q. Is the spring clamp type of attachment any more important or does it perform any different function when the plow is using a chisel point as compared to when it is using the sweep? A. Yes, I would say so.

[245] Q. The spring clamp performs a different function? A. Somewhat different.

Q. What is that difference? A. The sweep will not operate under extreme pumping movement. It gets out of line and it is a scratcher rather than a cultivator, and for that reason it musn't be operated under conditions where it pumps or turns as much, you see. So that is the difference, I would say.

Q. Does that make a difference in the performance of the clamp? A. No, not the clamp.

Q. My question is, if the plow is using a chisel on one hand as compared to a sweep on the other hand, does that make any difference in the spring clamp attachment or its performance? A. Well, the point I am trying to make is that in order for the sweep to operate you musn't have the same pumping action as much as you may have with the chisel. So you either set the springs down tighter or—of course it don't operate as deep and that won't make it vibrate so much. So there is that difference there.

Q. Well, would it be your view that if the sweep is on the end of the shank, and that is what we are doing, [246] is a cultivating operation, that we don't need the spring clamp? A. Not as much.

Q. You think you could get by pretty well without it? A. In fact, you don't want it to move because it gets out of line and it acts as a rooter and not a slicer, see?

Q. Have you been up to the north country, Mr. Fenton, where the rocks exist in the fields, and observed the plows in operation with the sweeps on them. A. No, I

haven't, not in this territory. But I have been in a lot of rocky countries.

Q. Well, yes, I suppose we have all been in some rocky countries, but the question is have you seen these plows operated with the sweeps on them in rocks? A. No, I haven't.

Q. Well now then, your testimony about what happens to it in the rocks with the sweep on is purely theory, isn't it? A. Aside from a few demonstrations.

Q. Well, the few demonstrations that you have observed, conducted in connection with the last trials, were rather unrealistic, in which you saw the plows plow into a concrete block or mound of concrete for test purposes? That is the situation, isn't it? (247] A. Yes.

Q. And as a matter of fact, those tests were conducted with chisel points on the plows rather than sweeps, weren't they? A. Yes.

Q. So the real fact of the matter is that you haven't seen any of these plows work in the rocks with the sweeps on them? A. That is right.

Q. All right. So you don't really know then whether it is necessary for the shank to pivot and for there to be an effective spring clamp mechanism in the rock country when the sweep is used? A. I know that a sweep doesn't function when it pivots very far. That is the only point I am making, whether it is in rocks or in clear soil, it doesn't function properly.

Q. The real point you want to make then, Mr. Fenton, is that when a sweep is on there, there is not as much need for it to pivot through a greater range and return, is that right? A. I don't want it to pivot through a greater range except to release the rock, of course, to avoid breakage.

Q. Isn't that what this device is for, a release mechanism [248] to release it when it encounters these immovable obstructions, rocks and so on? A. That is only one of the objects.

Q. What is the other? A. The other is to make what we call a pumping action, a vibratory action, which is considered to be beneficial in plowing.

Q. Do you find that in the patent, in this patent? A. The action is there in the patent, yes.

Q. Do you find that stated as an object in the patent? A. Yes, I believe it is stated in one of the Graham patents.

Q. Yes, in one of the Graham patents, in the original 811 patent, which is not in issue here, of course there was terrific language about pumping action. But do you find that as a defined function or object or purpose of the clamp in this case? A. I will have to reread it to answer you. (Examining document).

I doubt if it does give you in the original preliminary statement, though it does say that it provides for a—"whereby the shanks may rock when necessary."

Q. Yes, when necessary. And I wonder what we mean by normal operating position, as it is defined in this [249] patent. A. Well, the design of the chisels is such that they work best when they are in a certain position, have a little suction and that would be considered normal operation. Now, a chisel would work in—

Q. Now, just a minute. Listen, please, to my question. Now I am not talking about normal operations in general, I am talking about normal operating position. We have in these claims th of the language normal operating position, we have it in the specifications of this patent? A. Yes.

Q. Now, what do you understand is the meaning of normal operating position? A. When the chisel is in the position with regard to the vertical and horizontal direction so it will cut the soil, stay in the ground, dig it up.

Q. And in this patent we might say that means home base when the shank and hinge member back up here are in contact so that the top of the hinge member or shank attaching member is in contact with the underface of the fixed member? Would that be accurate? A. Well, that is part of it.

Q. That is what the patent talks about when it says normal operating position, doesn't it? [250] A. No.

Q. It isn't? A. Well, as far as the clamp is concerned, yes.

Q. All right. A. But not the tool. You are asking about the tool, the shovel.

Q. No—well, maybe I did. If I did, I didn't mean that. Let's talk about normal operating position of the clamp and the attachment of the shank to the clamp. What do you understand to be the meaning of normal operating position as it is set out here in the claim? A. When the spring holds the shank up against the stop which is provided.

Q. All right. Would it be fair to say that that indicates what would be called the normal operating position of the tool? A. Of the clamp.

Q. Well, if the clamp is in that position, is the forward end of the shank likewise in that position? A. That depends on the hitch and on the tractor and the levers.

Q. The forward end of the shank is controlled by those things? A. The tool. You get me mixed up. You mentioned the tool.

Q. I don't believe I have used the word tool, have I, Mr. [251] Fenton? A. Shovel.

Q. I said shank. All right, let's back up. I see that we are getting where— A. We don't have any argument. We agree.

Q. Well, I wouldn't want you to go that far and say that we agree all the way through on this matter, but I do want to find out some particular things. What precipitated this discussion now was your use of the term, pumping action, and we have concluded now, that this patent doesn't state anything about an object or purpose being a pumping action. It talks about permitting this shank to operate or rock when necessary, doesn't it? A. That is right.

Q. All right. So really and truly when we are talking about a spring clamp here we are talking about a clamp which will hold the shank in its normal operating position and permit it to pivot or rock when necessary. Isn't that true? A. I think that is true.

Q. All right. Now then, with those generalities out of the way, I would like to consider with you some of what came before this 798 patent in the way of spring clamps

You of course are thoroughly familiar with the [252] Graham type of spring clamp which was covered by the Graham 811 patent, one of which I hold in my hand and has been identified as Defendants' Exhibit 6 in this case. A. Yes, sir.

Q. You have studied those for testimony in the first Jeoffroy case, you have watched them in operation, and I am sure that you feel that you thoroughly know the operation of this clamp, don't you, Mr. Fenton? A. Except that I have forgotten much of it.

Q. Well now, this constitutes a part of the prior art which was cited by the patent examiner in the history of this patent, 798 patent, it constitutes a part of the prior art which has been cited by the defendant Deere in this case. Do you mean to tell me that you have not studied the construction of the 811 clamp and the devices as shown by the 811 patent in preparation for testimony in this case? A. No.

Q. You have not? A. No. You asked me if I had not and I said—my answer is no, that I have studied.

Q. Oh. All right. Then you have refreshed your memory and you have studied the clamp? A. Yes, sir.

[253] Q. And the patent, again in preparation for your testimony here? A. Yes.

Mr. Morris: All right. I would like, if we may, to put on the easel some colored enlargements of the drawings from the 811 patent, which we have here identified as Defendants' Exhibits 14-A, 14-B and 14-C, for consideration along with the Graham 811 clamp, Defendants' Exhibit 6.

For purposes of the record, so that everyone will know what we are talking about, Defendants' Exhibit 14-A is sheet 1 of the three sheets of drawings from the 811 patent; Defendants' Exhibit 14-B is sheet 2 of the three sheets of the 811 patent; Defendants' Exhibit 14-C is sheet 3 of the three sheets.

I am going to dismantle the 811 clamp, Defendants' Exhibit 6, for ease in discussion.

Q. (By Mr. Morris) Now if we may, Mr. Fenton, let's consider this 811 clamp from the standpoint of its basic

mechanical elements, the mechanical elements which make up the structure.

First of all, of course, I think it would be understood that the clamp fits upon the transverse frame member of a plow. Is that true? A. That is true.

[254] Q. And in this particular instance the clamp was designed to fit upon the lower flange of a type of beam which is commonly called an I-beam or an H-beam? A. Yes, sir.

Q. The beam having an upstanding web portion and another top portion. The portion of the clamp which I am holding in my hand that attaches to the beam of the plow would be commonly called a fixed clamp member, would it not? A. Yes, sir.

Q. That is the part of the clamp which is fixedly attached to the beam of the plow to position the shank of the ground working tool in its transverse position on the plow, is that true? A. Right.

Q. Now then, a second operative element of the Graham 811 clamp is what is called in that patent a fulcrum plate or might be called a hinge member or shank attaching member? Would that be accurate? A. We have called them all three of those things.

Q. To be strictly in accordance with the language of that patent, it is called a fulcrum plate? A. Fulcrum plate, yes, sir.

Q. But each of the other terms you would agree would be equally applicable, would you not? [255] A. Yes, sir.

Q. A third element, which I have not removed from the device, would be a pivot pin, which in this instance in 811 is located at the rear of the clamp portion, is it not, or the fixed portion of the clamp? A. Yes.

Q. A fourth element would be the coil spring, or if we want to not be specific about a coil spring we could just call it a spring means, that would be accurate, would it not? A. Yes, sir.

Q. Finally then we have the rod element which transmits the pressure of the spring, at the bottom end, into the movable member and shank, on the top end by means

of a washer and bolt, and in turn the seat of the spring on the fixed member into the fixed member, would that be accurate? A. Yes.

Q. All right. Now, as another element, of course it is not, strictly speaking, an element of the clamp itself, the element is the shank, of course, which goes into the clamp, it is the plow element which is clamped to the frame by means of this clamp, is it not? A. Yes, it is the thing you are trying to work.

Q. Would it be fair to say, Mr. Fenton, that broadly [256] speaking, those are the mechanical elements present in the 811 structure? A. Attaching means of the fixed member to the frame, you didn't mention that.

Q. Oh, I didn't mention the set screw which fastens the fixed member to the frame of the plow. I suppose that would properly be a part of the fixed member, would it not? A. Yes.

Q. Now then, referring to the drawings which are on the easel, the colored drawings on the easel, and let's look in particular at Defendants' Exhibit 14-B, using consistent color scheme throughout, the transverse frame member has been colored purple, has it not? A. Yes, sir.

Q. Step down if you can't see it from there. It is purple? A. Yes.

Q. The fixed clamping member has been colored in yellow? A. Right.

Q. And the pivoted clamp member or fulcrum plate has been colored in green? A. Yes.

Q. The shank itself has been colored pink? A. Yes.

[257] Q. The spring means is colored orange? A. Orange, yes, sir.

Q. Then the rod means, which transmits the spring pressure, has been colored brown? A. Right.

Q. You may return to the witness stand.

One point I would like to bring out here, Mr. Fenton, on the particular exhibit which I hold in my hand, the body portion of the clamp Defendants' Exhibit 6, we have some upstanding brace members at the rear, which are not shown in the drawings in the Graham 811 patent. That is true, is it not? A. Yes.

Q. Of course that wouldn't change anything we have said about the definition of these parts, would it? A. Well, it depends upon how you develop them. That is a brace clamp there.

Q. On the rear, these upstanding portions are brace elements, are they not? A. Yes.

Q. They still constitute a part of the fixed clamp member, do they not? A. Yes, sir.

Q. Now then, I wonder if we might look at the elements of that clamp more specifically in terms of the more [258] specific defining of each of the elements. Let's take again our fixed member. Could that be accurately described as having a forwardly extending portion to provide a spring seat? A. Yes, there is provided there a spring seat.

Q. Well now, I want you to follow my language. Would it be accurate to describe this body portion of the clamp of 811 as having a forwardly extending portion which provides a spring seat? A. Yes.

Q. That is shown in the 811 drawings, of course, the forward portion of the yellow member, is it not? A. Right.

Q. Would it further be accurate to describe this member as having a longitudinally extending underface? A. It would seem accurate to me to have it.

Q. You would be satisfied with that? A. Yes, sir.

Q. Then at the rear it has ears? A. Yes.

Q. Ears which are designed to accommodate a pivot pin? A. Yes.

Q. Now, in this particular instance those ears might be described as somewhat downwardly extending anyway, might they not? [259] A. Yes, sir, from the horizontal surface.

Q. Downwardly extending from the longitudinally extending underface? A. Yes.

Q. Now then, turning to the shank attaching element, could it be accurately described as having an elongated plate portion? A. Yes, the upper face is an elongated plate portion. Well, the whole thing is an elongated plate portion.

Q. And having an upper face which would normally correspond with the underface of a shank member? A. It could and does.

Q. Well, as it is situated and oriented in this particular device, is that true? A. That is right. That is true.

Q. The shank attaching member also having at its forward end a depending recessed lug to accommodate the head of a T bolt? Would that be an inaccurate description? A. No, sir, that is accurate.

Q. And at its rear end another depending lug with a recess or groove for accommodating a pivot pin? A. Right.

Q. The pivot pin element, of course, is strictly that, it is a pivot pin, but how would you describe the function or purpose of that pivot pin? [260] A. It is to provide the pivot around which the shank attaching member pivots and to transmit the pressure from the shank through the shank attaching member to the fixed member.

Q. It is a pivot pin then designed for mounting or connecting the shank attaching member to the fixed portion of the clamp? A. That is right.

Q. Now, the spring in this instance, the spring used in 811 is a coil spring, and in its orientation in the structure would it be accurate to describe it as seated upon a forward extension of the fixed member? A. Yes.

Q. And having connection on that end with the fixed member? A. Certainly it bears on it.

Q. And seated or bears on it? A. Seated on it, yes.

Q. And having connection at the opposite end with a washer or nut on the spring rod? A. Yes.

Q. Then the spring rod itself, to define it more specifically, this particular spring rod has a T-shaped head on the bottom, does it not? A. Yes.

Q. And that T-shaped head is positioned in the recessed [261] groove at the forward end of the plate? A. Correct.

Q. And on its opposite end—well, let's take it through its intermediate steps. That same rod passes through a registering opening of the hinge member, the shank, the hingerod then passing through registering opening, in the hinge member, the shank, and the fixed member? A. Yes, sir.

Q. And having connection at its upper end by means of a washer and nut with the spring, whereby the spring pressure is transmitted to the hinge member, shank and fixed member, is that correct? A. That is correct.

Q. Now then, Mr. Fenton, you have observed the performance of that type structure and you have observed that it had some deficiencies insofar as wear and that kind of thing was concerned. Do you think it would be fair, Mr. Fenton, to say that the 811 clamp was really the launching point from which Mr. Graham's 798 clamp that is here in issue was designed? A. Well, I don't know any reason why I should say that, because I don't know.

Q. Well, you sat through the other cases, did you not, and you heard Mr. Graham testify as to these deficiencies in 811 which he was trying to cure in designing 798? [262] A. No, I didn't hear that.

Q. You didn't hear that? A. No. I heard the discussion of the deficiencies in this clamp, but at that time they weren't designing the 798.

Q. Sir? A. As far as I know they were not working on the 798, at the time of the first case.

Q. I didn't ask you about the first case. You testified about both patents in the second case, didn't you, the second Jeoffroy case? A. I didn't testify on the Cockshutt case.

Q. No, I know you didn't. A. Yes, but of the other Jeoffroy cases.

Q. You talked about both patents in the second Jeoffroy case, didn't you? You testified on both of them? A. Oh, yes, that is right.

Q. All right. Then it is just your testimony that you don't remember what Mr. Graham said as to what he was trying to do in making 798? A. No.

Q. Is that it? A. I don't remember his testimony about that.

Q. All right, I will cover that in another way.

* * *

[263] (Recess.)

Q. (By Mr. Morris) Mr. Fenton, we have just been discussing the structure of the Graham 811 clamp. I

would now like to talk a little bit about its operation. As already pointed out, it was designed to attach the shank of the ground working tool to the transverse spring member of the plow. Now then, as the plow goes forward through the field, this shank in its position on the beam would be—if the direction of travel was the way I am pointing—would be facing this direction, would it not, as I am holding it here? A. Yes.

Q. Now then of course it would be understood that the spring steel shank curves rearwardly and downwardly to the point of the plow tool, whatever it may be? A. Yes.

Q. All right. As it goes through the ground or through the field in that direction, as the plow point encounters a rock of sufficient size to constitute an obstruction, what happens in this structure, this 811 structure? A. The point of the tool, ground working tool, is of course backward and upward, which depresses the spring, causes the front end here, which we are looking at, [264] to move downward until the sufficient movement releases the ground working tool from its obstruction.

Q. And then the spring— A. Allows the spring to return it to its normal working condition.

Q. I have disassembled here, for purpose of demonstration, as to the ground forces which you have mentioned, I have now turned this at right angles, it would be upward and rearward, and that would be a competent force, wouldn't it? A. Certainly.

Q. To pivot the rear portion upwardly and the forward portion of the shank downwardly? A. Right.

Q. Against the spring pressure? A. Right.

Q. When released from the obstruction the spring pressure pulls the end back up and the shank returns to its operating condition? A. Right.

Q. That is what is called the rocking or pivotal action of the clamp, is it not? A. Right.

Q. And in that sense from the standpoint of the pivotal action of the shank, as the plow goes down through the [265] field, could you tell any difference in the world between Graham 811 and Graham 798 or Jeoffroy HT-5, or any of the others? A. Yes, there is some difference. You said any difference.

Q. From the pivotal action of the shank, from that standpoint? A. Actually the pivotal action is the same, but there is a difference as you follow them down the field, likely to be a difference.

Q. The purpose, the over-all purpose of all of these spring clamp structures is to do precisely that same thing, that is, to permit the plow tool to ride up and over an obstruction, permit the shank to pivot, and permit it to return to operating position after the obstruction is passed, is that not true? A. That is the major premise.

Q. All right. Now, again talking about the specific performance—well, before I come to that, what about the action of the ground working tool in the soil? Would you be able to tell any noticeable difference between the performance of the ground work of the tool in the ground in comparing Graham 811 with Graham 798 or Jeoffroy SC-580, Defendants' Exhibit 2, which was the type that was involved in the first Jeoffroy case? [266] A. No material difference, no.

Q. Would you be able to tell any material difference in the performance of the ground tool when we come to the later model Jeoffroy as compared to Graham 811? A. No difference, no.

Q. Or Cockshutt, which was involved in the Cockshutt case, now in evidence here as Defendants' Exhibit No. 1?

Mr. Fishburn: If Your Honor please, this has not been admitted into evidence as yet. We stipulated that this device was in the Cockshutt case, but we haven't consented that it be admitted in evidence. It has been identified in the stipulation, but it is not in evidence as yet.

Mr. Morris: Well, I will offer it in evidence right now, then, Your Honor. The clamp which I hold in my hand has been identified as Defendants' Exhibit No. 1 and as a Cockshutt clamp of the type which was held not to infringe the 798 patent in the Graham versus Cockshutt case.

I offer it in evidence.

Mr. Fishburn: We object to the offer of the exhibit in evidence for anything further than what counsel has stated. If he intends to compare the accused devices with this device we do object for that purpose. The question

here is the comparison of the [267] claims of the patent in suit with the accused devices and not the comparison of the accused devices with some other accused device, as far as infringement is concerned.

Mr. Morris: I offer it at the moment for the limited purpose upon which I just inquired of this witness, as to whether or not the performance of the ground working tool in this type of structure would be noticeably different from the Graham 811 or any of the other spring types, for that purpose only at this time. But I want to further say that it will be offered later in the case for comparative purpose in the same manner in which they sought to compare, in direct examination of Mr. Fenton, the Jeoffroy structures which were held to infringe this patent. They are not binding upon the Court, as the Court has said, but if the Jeoffroy infringing device is to be considered as having a bearing, then certainly the Cockshutt non-infringing device would have an equally pertinent bearing upon the opposite side.

The Court: That would certainly be the opinion of the Court at this time unless some other reason could be advanced, since the Jeoffroy devices have been admitted in evidence, at least they have been used in evidence, I don't know whether they have been admitted into evidence or not, but they have been [268] used, I think it would be proper also to use this other device in the same manner.

Q. (By Mr. Morris) Then coming to my question of you, Mr. Fenton, you have of course observed the Cockshutt clamp—

Mr. Gold: If Your Honor please, this witness did not testify in the Cockshutt case and there has been no showing that I know of that he has observed the Cockshutt device in operation.

Mr. Morris: I will qualify the witness then, Mr. Gold.

Q. (By Mr. Morris) Mr. Fenton, is it your testimony that you have not observed the Cockshutt spring type clamp in operation? A. That is right.

Q. You have not? A. Have not.

Q. All right, sir. Have you studied the structure of the Cockshutt clamp? A. Yes, I have.

Q. You are willing to testify, of course, as to how the 798 structure would operate, even though you haven't seen it, it is just a paper patent. Would you likewise be willing to testify as to how the Cockshutt clamp would operate, from your study of the structures [269] of the clamp? A. For what it is worth, I would say that I would expect it to operate in the same way.

Q. You would expect it to operate in the same fashion, substantially the same fashion? A. Generally speaking.

Q. Would it be fair to say, Mr. Fenton, that all of these spring clamp structures which we have just been talking about achieve substantially the same over-all result insofar as the ground working operation of the tool is concerned? A. I think that is right.

Q. They are basically designed to attach the ground working shank member to the frame of the plow in a resilient fashion, so that it will be maintained in its normal operating position but will be free to pivot under extreme forces and return to its normal position by means of the spring pressure upon the forward end? A. Right.

Q. Now, coming back to Graham 811, we had a somewhat unusual structure in 811 in that the shank member was positioned between an underface of the fixed member and an upper face of the hinge member, and not directly fastened to the hinge member. Is that true? [270] A. That is right. It was not directly fastened to it. I don't know that I agree that it is unusual. That was the structure.

Q. Well, do you know of any others which involve that particular feature? A. No. That was the first one, and it had this structure.

Q. Has this peculiar structure. Now, the means for attaching the shank in this type clamp, the 811 type clamp, was the spring rod. That spring rod performed a dual function of holding the shank against rearward pulls, which of course are the predominant pulls on the shank, and also it performed the function of transmitting the spring pressure from the fixed member to the hinge member to hold the shank in its normal operating position and permit it to operate? Is that true? A. Right.

Q. All right. Now, with that particular type of structure, with the spring rod performing the dual purpose I have just mentioned to you, it resulted in some operating deficiencies or drawbacks, did it not? A. Rather loose.

Q. Is that all? Just the fact that it was rather loose? A. It was subject to wear, I understand.

Q. Well now, you not only understand that, you saw the worn-out clamps which were brought into the courthouse, [271] did you not, Mr. Fenton? A. A few of them, yes.

Q. And you know that as the rod scrubbed up and down in the opening and closing action of this 811 clamp, with the pulling load of the shank back against that rod, that you had a constant scrubbing action of the rod against the rear surface of the opening in the fixed member, did you not? A. Yes, sir.

Q. And the result was that the fixed member would wear clear back at this point right on back to sometimes as far back as the leading edge of the frame member itself, wouldn't it? A. I didn't see that.

Q. You didn't see it go that far? A. Not that far.

Q. Would there also be a severe wear on the spring rod itself where it scrubbed? A. Yes, sir.

Q. As a matter of fact, I would imagine that you have seen them wear in two in the field and shoot out of those things like a rifle bullet almost, haven't you? A. No, sir.

Q. You never did see that? A. No.

[272] Q. Now then, in addition to the wear on this spring rod in that type of structure, did you have some bending of the rod which resulted from these severe pull-back forces of the shank on the rod? A. I am not sure that they did have bending, but I would expect you would have some.

Q. And if the spring rod bent and became distorted so that it did not move freely through the three registering openings, it would tend to bind and not freely open and close the device under the spring pressure, would it not? A. It would bend enough, certainly.

Q. Now then, in addition to that, because of the peculiar structure of this device we had two different pivot points,

the hinge member or the fulcrum plate at its rear end pivoted about the pivot pin, did it not? A. Yes, sir.

Q. The pin was its pivotal axis? A. Right.

Q. The shank on the other hand did not have a pivotal axis about the pin, but pivoted about a point or surface—point would be inaccurate, a surface on the rear heel portion of the fixed member, did it not? A. Right.

Q. So we had the hinge plate having one point of pivot and [273] the shank having another point of pivot? A. Yes, sir.

Q. Now then, that resulted, in order for the device to operate effectively it resulted in a continuous sliding or shifting longitudinal motion of the shank relative to the hinge member, and in turn relative to the fixed member? A. Right.

Q. That then resulted in a severe wear area at the pivotal area on the base of the clamp, did it not? A. Some wear there, yes, sir.

Q. Some wear there. Now then, since we have looked at those operating deficiencies or wear factors in that type of structure, does that refresh your memory any about what Mr. Graham said the purpose was in designing 798? A. No.

Q. It does not? A. I didn't hear it. I really don't think I have heard it.

Q. All right, that is fine. Now then, taking 811, as we have discussed it here, do you feel that we have accurately described the structure and accurately described the operation and the function? A. In the main, yes, but you wouldn't—

Q. Is there some point at which you would like to differ? [274] A. There is one point that I tried to mention before and you wouldn't permit it.

Q. Excuse me, I didn't mean to keep you from it, Mr. Fenton. A. When you follow this device working in the field there is a tendency for the shank to swing laterally somewhat, which is of course another item that may not be important. but it was nevertheless present in this device, especially on the turning, when it turned a corner.

Q. This particular 811 structure, as you mentioned a moment ago, it is a rather loosely connected device, with quite a lot of play in it? A. Yes.

Q. So that down here at the bottom end of the shank, as you turned the corner, you would have a twisting action of the shank and a sliding action which might cause it to do a lot of lateral fishtailing sort of activity as it goes through the ground, is that true? A. Slightly, yes, sir.

Q. Somewhat more than the others perhaps? A. I believe so.

Q. Now, is there any other thing that you would like to bring out that was not described accurately about the operation? [275] A. No, sir. I think it is quite accurate, the description.

Q. I believe there is one action that we probably haven't described. We have described the rearward pull on the shank and the upward force on the shank which tend to turn it around the pivotal bearing surface, described the lateral movement and the twisting movement. In this particular 811 structure you would also have some recoil or rebound action of the shank that would clear the obstruction and the potential or built-up force in the spring shank turn loose and go forward, would you not? A. Yes.

Q. Now I would like to turn to consideration of the 798 structure. Well, before turning to that 798 structure, Mr. Fenton, in the Graham 811 structure what element or elements performed the stop function for the shank to position it in its normal operating position? A. The spring, of course, which urged it upward and the contact between the shank and the opening in the fixed member, the horizontal way or part in the fixed member.

Q. Excuse me, I am not quite following you. Would you state it again, please, sir. A. The spring and the spring bolt of course which urges the shank upward.

Q. Now let's stop just a moment there. Of course the [276] spring and the spring bolt do not perform the stop function, they perform the force which brings it back to stop position, do they not? A. Yes, sir.

Q. They don't actually do the stopping, do they? A. No, no, but they urge it up to the stop.

Q. Fine. That is the force that urges it up to the stop and that is true in all of the structures, isn't it, all that we have discussed? A. All of them.

Q. And all that we will discuss in the spring clamp class? A. Yes, sir.

Q. All right. So then what is it that performs the stop function in 811? A. Contact between the top of the shank and the fixed member.

Q. As shown in the drawings, and we will refer particularly to Defendants' Exhibit 14-B, it is the contact of the longitudinally extending upper face of the shank with the longitudinally extending underface of the fixed member? A. Right.

Q. And as has already been shown here and is evident from the drawings, those matching longitudinally extending faces are what, 6, 7 inches in length? [277] A. 7 inches, relatively.

Q. Roughly. We have identified the four sheets of drawings from the Graham 798 patent, that is, colored enlargements of those drawings, as Defendants' Exhibits 21-A, 21-B, 21-C and 21-D. I have placed—well, there is just not enough room to put them all on the easel. I will just place A, B and C on the easel for the moment. We will consider D as we come to it. Those of course are merely enlargements from the actual drawings of the patent, and you would recognize them as such, would you not? A. Yes, sir, I believe so. I would have to study them a little to see if they are accurate, but I believe they are.

Q. Now I would like to talk with you about structure, and I don't want for the moment to talk about the claims of this patent or even the specifications of this patent. I want to talk about the structure as shown in the drawings of the patent and as shown on these enlargements here. Would you tell me just in your own language what you would consider to be the mechanical elements of the 798 structure as disclosed in the patent drawings? A. The fixed part, which clamps or which attaches the clamp to the frame, that is one part.

[278] Q. That is colored in yellow? A. Yes.

Q. In the drawings. All right. A. Next, the shank attaching member is colored in green, which is just below

the fixed member. The spring and the spring bolts which make the spring effective in urging the—perhaps there are two parts, the spring is one part, the spring bolts and the washers and nuts are another part. That is 4.

Q. The combination of the spring and the rod of course is necessary to perform the function? A. Right.

Q. But insofar as structural elements are concerned, do you think it would be proper to define the spring as an element and the spring rod as a separate element? A. Yes.

Q. All right. A. Then there is the bolt at the front end which attaches the shank-attaching member to the shank or standard as we have called it. That is labeled in a bright blue or emerald.

Q. Well, the fastening bolt you are talking about? A. Yes.

Q. That is a lighter green? A. A lighter green. That is another element. Then of [279] course we mentioned the shank and the shank is an element, although not of the clamp but of the operation of the clamp. We should mention then the stirrup at the back, which is an additional shank-embracing member. That I think is the list.

Q. Would you want to classify the pivot pin as an element? A. Oh, yes, the pivot pin should be classified as an element.

Q. That is colored in blue on the drawing? A. Yes.

Q. Which of those elements, Mr. Fenton, were not present in the Graham 811 structure? A. The fixed member is more rigid, but the element was there in the other structure.

Q. Now let's stop right there and eliminate one little point from contention in this case. The fixed member colored in yellow in the 798 structure has an upstanding bolt at the forward end which bolts to a fastening plate or clip that goes over the top of the H-beam to add rigidity and strength to the fixed member? That is true, isn't it? A. Yes.

Q. And if you have studied the file wrapper and the original claims which were drawn in the original application, I am sure you know that some claims were originally [280] drawn to that element which goes up over the top

of the beam. That is true, isn't it? A. It may have been, yes.

Q. Do you not recall that? A. I don't recall that argument in the file wrapper.

Q. You don't recall that particular element having been fully shown by the Peifer patent cited by the patent examiner? A. No.

Q. In any event it is not involved in the claims of this patent, is it? A. No, I think not.

Q. It does constitute a part of the structure of the fixed member but not involved in the claims? A. That is correct.

Q. So that that element as such is no point of concern in this case, is it? A. No, it is not.

Q. So then we had the fixed member, 798 we have a fixed member and in 811 we had a fixed member. Go ahead, please. A. The bolt which attaches the shank to the end member is an element that doesn't appear in the 811 patent.

Q. The little fastening bolt colored in light green, shown at the forward end, is a new element you say that [281] wasn't present in the 811 structure? A. That is right.

Q. All right. A. Also the stirrup at the rear just below the pivot is a new element in the structure.

Q. All right. And that is the sum total of it, isn't it, Mr. Fenton? We have two new elements or sub-elements, parts of elements, in 798 that were not present in 811, and that is a fastening bolt at the front end to fasten the shank and the hinge member together? A. Yes.

Q. And a depending stirrup from the hinge member at the rear to embrace or support the shank at that point? That is true, isn't it? A. There is an additional slight difference. I don't know whether it would be called an element, but at the rear of the shank attaching member the pivot is actually enclosed whereas in the 811 patent it is just a U-shaped structure that fits over the pin, you see.

Q. Could you point that out to me? I am not with you on that. A. On this shank attaching member, it just fits over the pin. In this part it is actually engaged here.

Q. All right, I understand. The pivotal element of the shank attaching member in 811 was merely a cradle or [282] rocker? A. Yes.

Q. A recessed groove in the plate member? A. That is right.

Q. Whereas in 798 it is a true bearing element, is that what you are saying? A. Yes, completely surrounds the pin.

Q. It is the full bearing with the pin through the bearing? A. Yes.

Q. All right. Now then, is that the sum total of the difference in elements of 798 over 811? A. I think so, yes, sir.

Q. Let's look at it then from another standpoint. This may be saying the same thing, but I want to be certain that we are together on it, and for that purpose I will remove the drawing, Defendants' Exhibit 21-B, so that we may have comparative drawings of 798, which is Defendants' Exhibit 21-A, and of 811, which is Defendants' Exhibit 14-B.

In 811 we have a fixed shank attaching member. In 798 we have—I beg your pardon, I am pointing to the wrong one. In 811 we have a fixed shank attaching member shown in yellow on Exhibit 14-B. In 798 we have a fixed clamp member shown in yellow on Exhibit 21-A. That is true, is it not? [283] A. I don't follow you on that 811 patent. You said you had a fixed shank attaching member?

Q. Let's back up. We have a fixed clamp member. I did say shank attaching member, didn't I? A. I thought you did.

Q. All right. I was wrong about that. We have a fixed clamp member? A. Yes, certainly.

Q. In 798 we have a fixed clamp member? A. Right.

Q. Both shown in yellow? A. Yes.

Q. Both for the purpose of attaching the clamp to the transverse spring member of the plow? A. Right.

Q. In 811 we have a pivoted shank attaching member, shown in green? A. That is right.

Q. In 798 we have a pivoted shank attaching member shown in green? A. Right.

Q. In 811 we have a pivot pin passing through pin supporting areas on the fixed member, the pin being shown in blue? A. Right.

[284] Q. In 798 we have a pivot pin passing through pin supporting areas on the fixed member, the pin being shown in blue? A. Right.

Q. In 811 we have a coil spring seated upon a forward extension of the fixed member? A. Right.

Q. In 798 we have a coil spring seated upon a forward extension of the fixed member? A. Correct.

Q. In 811 we have a spring rod passing through the spring member, bearing on one end upon the hinge member or shank attaching member and bearing on the other end upon a washer and nut on top of the spring? A. Right.

Q. We have the same structure in 798, do we not? A. Except that the lower end bears on the shank.

Q. One difference there? A. Yes, sir.

Q. In 811 the spring rod bears upon the shank attaching member directly whereas in 798 it bears directly upon the shank? A. Correct.

Q. All right.

Q. Then for every element that there is in 811 there is [285] a similar element in 798, is that true? A. Right.

Q. Do you make any distinction, Mr. Fenton, for the connection of the spring rod directly to the hinge member in 811 as compared to the attachment of the spring rod directly to the shank in 798? A. Well, there is a very definite difference there.

Q. It is a different structure, isn't it? A. Different structure. The difference is that in the 798 these two parts, the shank and the attachment, were bolted together, therefore it doesn't depend on the rod to hold them. The rod merely urges it upward by the contact of the spring. As you said, in 811 it has a dual purpose. There is that difference.

Q. Yes. The spring rod in 811 performs both the job of holding the shank against its rearward thrust and also

of pulling it up into operating position or holding it in operating position? A. Correct.

Q. Under the spring pressure. In 798 those two functions are separated so that the spring rod now performs only the job of transmitting the spring pressure to open—to permit the device to open and close? A. Right.

Q. The load-carrying function is now performed by the [286] fastening bolt which fastens the shank and the hinge member together? A. Correct.

Q. So that structural difference does make some difference in the functions of those parts, doesn't it? A. It adds to the rigidity of the structure.

Q. It fastens the shank and the hinge member more firmly together at that point, is that true? A. Right.

Q. Summarizing each and every element—that is, I am talking about broad structural elements now, of course, and not in terms of the language of the claim. Each and every broad structural element that is present in 798 was present in 811 except for the fastening bolt at the front end and the stirrup at the rear end of the hinge member? A. And the change in the pivot mounting.

Q. All right. That is a part of the change of the hinge member of course? A. Yes.

Mr. Morris: Your Honor, I have prepared as Defendants' Exhibit 5 a book of the prior patents which were cited by the Patent Office in this file wrapper history, and also under a separate heading in the same book copies of all of the additional [287] patents which have been cited by the defendant in its answer in this case as prior patents. You have copies of all those patents, I assume, do you not, Mr. Fishburn?

Mr. Fishburn: Yes.

Mr. Morris: At this time we will offer in evidence the Defendants' Exhibit 5, the book of prior art patents.

(Defendants' Exhibit 5 was received in evidence.)

* * *

[288] Mr. Morris: As I understand, the right of cross-examination is co-extensive with the issues in the case, is it not, Your Honor?

The Court: No, the rule we follow here is that cross-examination on issues other than the credibility of the

witness or interest of the witness, cross-examination should be confined generally to the issues raised in direct examination.

Mr. Morris: All right.

Mr. Fishburn: Let me explain, Your Honor, that we did not object to this interrogation regarding the 811 patent because we had mentioned that in our examination.

Mr. Morris: All right. I had understood the rule differently, but that is all right, it doesn't matter, we will come at it at a later time.

Q. (By Mr. Morris) I understand, Mr. Fenton, that in interpreting the claims of the 798 patent which are here in issue, that you have taken into consideration, though, the teachings of the prior art patents as bearing upon a proper interpretation of those claims?

Mr. Fishburn: I object to that as an improper question, Your Honor. I don't think that has any bearing on the question that we are here concerned with, whether he took them into consideration in [289] considering these claims or not.

Mr. Morris: Your Honor, this man has sought to interpret these claims and has sought to apply them to different structures, and I believe at the very outset of my cross-examination of him he stated that in preparing himself for this testimony he has studied the prior art and considered its teaching.

The Court: He stated he had studied the prior art, yes.

Q. (By Mr. Morris) Well, let me ask one further voir dire question. Have you considered the prior art from the standpoint of its bearing upon a proper interpretation of the language of the claims in the patent? A. No, I believe not.

Q. You haven't done that? A. No. I have studied it from the standpoint of prior art which would affect the validity of 798, from the standpoint of validity rather than interpretation of the claims. I think you want to do that self-consciously, but I don't think I had that in mind—

Q. Of course validity, Mr. Fenton, is a legal question which the Court ultimately has to pass on. A. Certainly.

Q. But are you telling me that you have considered the prior art from the standpoint of distinguishing the [290] present claims from the prior art? Have you done that? A. Yes, of course.

Q. And would that not, in turn, affect your interpretation of the claims here? A. I should think so.

Q. It would? A. I should think it would affect it, yes.

Mr. Morris: I have marked for identification Defendants' Exhibit No. 4, which is the file wrapper history of the patent in suit.

* * *

We would like to offer in evidence at this time the file wrapper history of the 798 patent in suit as Defendants' Exhibit 4.

Mr. Fishburn: No objection, Your Honor.

The Court: Very well. It will be admitted.

(Defendants' Exhibit 4 was received in evidence.)

Q. (By Mr. Morris) Have you considered the file wrapper history of this patent, as having a bearing upon a proper interpretation of the claims of the patent? [291] A. Yes, I have read the file wrapper and was very much interested in the discussions, the actions.

Q. Well, I understand that you have studied it, you have read it from the standpoint of trying to arrive at a proper interpretation of scope for these claims? A. You mean the claims of these two questions in suit?

Q. Yes, sir. A. Well, I think so. I don't see how you could avoid that.

* * *

Q. (By Mr. Morris) Then I will turn my attention to the claims of the patent in suit, Mr. Fenton, and for convenience in this discussion I would like to return to the easel Plaintiffs' Exhibit L, which is a claim chart of Claim 1 of the patent, with the Deere 650 structure being shown on the right-hand side of that chart.

[292] Now, you have stated, Mr. Fenton, on direct examination that you found each and every one of the elements as called for in Claim 1, or its equivalent, present in the Deere structure, and I would like to consider with you now, if I may, the language of this claim.

Mr. Gold: If Your Honor please, I believe that Mr. Fenton's statement was that it was the functional equivalent and not really the word equivalent. If you recall, Mr. Morris objected to the use of the word equivalent without further definition, and therefore I used the word functional equivalent.

Q. (By Mr. Morris) I believe that is correct, and I don't want to distort your testimony one iota, Mr. Fenton. Your testimony was that each and every element could be read upon the Deere structure either as being structurally present or as having a functional equivalent? A. I believe that is right.

Q. All right, sir. Let's start off at the beginning here. We say, "In a plow having a frame and a ground working tool provided with a shank adapted to rock relatively to the frame when the plow is in operation in a forward direction." Now there in the introductory portion of that claim, the frame of the plow is stated and you have colored [293] it blue in these drawings, have you not? A. Yes, sir.

Q. And the frame is not an element of the clamp, is it, Mr. Fenton? The frame of the plow is not an element of the clamp, is it? A. Not normally, but in one of your—well, it is in the other one, you have made it an element.

Q. Well, we will come to that. A. Yes. In this case—

Q. As an engineer, Mr. Fenton, if you took a set of specifications on a plow, and you came to the term, the frame of the plow, you wouldn't construe it as a clamping means for clamping a shank to a frame, would you? A. No, normally it should not be considered a part of the clamp.

Q. It is a part of the plow frame? A. Yes.

Q. It is the thing to which the clamp is attached, isn't it? A. Right.

Q. And the shank again is not really a part of the clamp, it is the thing that is clamped by the clamp, isn't it, or attached by the clamp? A. It causes the shank to function. That is, the clamp [294] causes the shank to function.

Q. Do you want to call it a part of the clamp? A. Pretty close to it I would say.

Q. Certainly it is integral with the clamp and it is described in some of the language of this claim, its function is described and shown, isn't it? A. Yes.

Q. But when you come to the breakdown of this claim into its mechanical or structural elements, do you consider the shank as an element of the clamp? A. I would.

Q. All right. In any event, it is colored in green on these drawings? A. Yes.

Q. Now then, "a mounting for pivotally attaching and supporting the shank of the ground working tool to a transverse member of the frame."

Of course admittedly that is true in the Deere structure, nobody would say otherwise.

Coming to our first element, "a fixed member adapted to be fixed to the transverse member of the frame." Now, if we stop right there, is that element present in Deere 650? A. Certainly.

Q. If we stopped right there is that element present in [295] Graham 811? A. Yes, sir.

* * *

Q. (By Mr. Morris) All right, is it present, Mr. Fenton, in the Cockshutt structure which has been held by the Fifth Circuit not to infringe this patent? A. You are referring now to a fixed member?

Q. Stopping right there, just where I did. A fixed member— A. To be fixed to the transverse member of the frame.

Q. "a fixed member adapted to be fixed to the transverse member of the frame." A. Certainly it is present in the Cockshutt device.

[296] Q. Defendants' Exhibit 1? A. Yes.

Q. Let's pass to the sub-element "a." "Having a longitudinally extending underface, terminating forwardly of the transverse member to which said mounting is adapted to be fixed." What is the significance of that language to you? A. The significance is that it provides the stop for the—the fixed member here must have a longitudinally extending underface to which the other parts of the clamp must be fitted or attached or used as a stop, in most cases.

Q. Can you point me to any place in this patent which even uses the word stop? A. It is not in these claims.

Q. Is it in the specifications? A. It certainly is implied in the specifications.

Q. Well, many things may be implied, but can you tell the Court here at any point where you can find the word stop in this patent? A. I would have to reread it and see.

Q. Do you find any place in the patent where it says that the function of the longitudinally extending underface is to stop the shank? A. Stop the upper movement of the shank?

[297] Q. Does it say that? A. Well, it says in normal contact with the underface, bringing it in normal contact.

Q. That is the language used, isn't it? A. Yes.

Q. Normal contact or normal position? A. Normal contact, which would seem to be a stop contact.

Q. So you in your own mind here have selected this thing and called it a stop function, but do you think that that is a fair interpretation of these words, "a longtitudinally extending underface terminating forwardly of the transverse member to which said mounting is adapted to be fixed"? Now, what I want you to direct your attention to is the language "longitudinally extending underface." What does that mean? A. It means a horizontal member under the—I should say it had to be in horizontal direction.

Q. Well, would horizontal be sufficient, Mr. Fenton? A. Well, it uses longitudinally in relation to the travel of the plow, I believe.

Q. All right, let's orient ourselves again so that we don't get at cross purposes with each other. The direction of travel of the plow is normally what is called the longitudinal direction, is it not? A. Yes, I should think so.

[298] Q. At right angles to that direction is called the transverse or lateral direction, is it not? A. Yes.

Q. Then of course you would have the vertical, which would give us our three planes of movement or structural location, wouldn't it? A. Yes.

Q. All right. So longitudinal, as it is used in this claim, means a face extending in the direction of movement

of travel of the plow, doesn't it? A. That is right. We agree on that.

Q. All right, sir. Do you know how that particular language happened to come into these claims, that is, from the history? Have you searched the history to find out how that particular language came into these claims? A. No, I can't say that I have, but the Graham clamp has definitely and clearly a longitudinal underface.

Q. That is accurately descriptive of the structure of 798? A. Yes, sir.

Q. As shown in the drawings, and as further described in the specifications of this patent, isn't it? A. That is right.

Q. All right. But do you know, Mr. Fenton, that of the first 12 original claims which were contained in this application that there was not one single one of them [299] which defined the fixed member as having a longitudinally extending underface? A. No.

Q. Have you examined those claims? A. I don't recall that.

Q. You haven't examined the file wrapper history then that closely? A. Not that closely, that I remember.

Q. Excuse me, have you finished? A. I haven't examined it closely enough to remember those details now here.

* * *

[301] Q. (By Mr. Morris) Mr. Fenton, if this particular element 1 of Claim 1, defined as "a fixed member adapted to be fixed to the transverse member of the frame," now, if the element stopped at that point, to you as an engineer construing that language, would it mean anything differently than it does if you add the additional language, "and having a longitudinally extending underface terminating forwardly of the transverse member to which said mounting is adapted to be fixed"? A. Well, the first statement is —there is no question about it, it is there, it is present. Now, the second one of course, which is more specific, I think I will admit it is open to some question whether this underface when it is present there would really and

truly satisfy this statement. But it is the only one there, and it is there.

Q. Now, I am not talking about Deere right now. I am talking about this language of this claim, and your [302] view about interpretation of that language as an expert on structures. Now, does it mean the same thing to you if we stopped off where I stated a moment ago, "a fixed member adapted to be fixed to the transverse member of the frame," as it would if we went ahead and incorporated the rest of the language, "a longitudinally extending underface terminating forwardly of the transverse member to which said mounting is adapted to be fixed"? A. I am not sure that I understand your question, but the second part, "a", is more specific and further delineates the general statement under 1.

Q. Do you think as an engineer, would it constitute a fair limitation upon the type of fixed member that the claim is talking about? A. There must be a horizontal or a longitudinally extending underface there to satisfy this "a".

Q. That is the way it defines it, isn't it? A. Yes, sir.

Q. And that is exactly what the element provides for, isn't it? A. Certainly.

Q. All right. Now then, you have already testified on direct examination that you do not find that element present in Deere 650, that you do not find a [303] longitudinally extending underface of the fixed member present in the Deere 650 structure? That is true, isn't it? A. No, I don't believe so. The one that isn't present is one under 2. No. 1, under 2.

Q. I will come to that one in a moment. Perhaps I misunderstood you. A. I testified that the bottom of this projection on the fixed member, a small lug extending down, might be construed to constitute a longitudinally extending underface.

Q. You are saying that it might be construed as constituting? A. That was my testimony, as I recall.

Q. Mr. Fenton, do you think it is a fair interpretation of the term "longitudinally extending underface" to apply it to a lug element which is approximately one quarter

inch in width, and if it extends in any direction at all it extends transversely of the clamp member? A. When you consider its function, I think it is fair.

Q. We will come to function in a moment. I am talking about structure now. A. Yes, sir. Well, it is questionable, I will admit.

Q. It is not questionable, it is just not present, is it, [304] Mr. Fenton? A. That part is present, certainly.

Q. Is a longitudinally extending underface of the fixed member present? A. There it is, a quarter of an inch wide.

Q. And you are willing to call that longitudinally extending? A. I am, because it is used functionally for the purpose that the underface is used for in the Graham clamp.

Q. Is it literally present, Mr. Fenton? A. Literally, yes, sir.

Q. Is a longitudinally extending face literally present in this structure (indicating)? A. Certainly, a small face.

Q. And you are willing to say that this depending lug at the forward end literally is a longitudinally extending underface of the fixed member? A. It has a longitudinally extending face on it unquestionably, however small, and it serves—well, you don't want function yet.

Q. No, I don't want function yet. It extends longitudinally would you agree approximately a quarter of an inch? A. A little more perhaps.

Q. Do you think that that is fairly the same kind of a longitudinally extending underface within the meaning [305] of the language of this patent (indicating)? A. I don't think it is of the meaning of the language in the Graham patent, but it fits only that way on the Deere.

Q. Well then, it is not a longitudinally extending underface within the fair meaning of the language of the element, is that what you are saying? A. No, I don't admit that. That is contrary to my testimony this morning.

Q. Well, I understand what you testified this morning. I want to know what you are testifying now. A. The same.

Q. So you are going to stand on the proposition that this lug is a longitudinally extending underface of the fixed

member within the meaning of the element of the claim? A. Yes, sir.

Q. All right. Now then, let's pass on to the sub-element "b", and to introduce it I will pick up the words from sub-element "a", "the fixed member having ears extending rearwardly from said underface at the sides thereof." Now then, what underface is that language talking about? A. That would be the underface of the fixed member, of course. That is a sub-head under the fixed member.

Q. That is talking about this same longitudinally [306] extending underface of the 798 structure, isn't it? A. Yes.

Q. And in 798 that is accurately descriptive, as shown in the drawings, isn't it? A. Yes.

Q. Transfer your thoughts to the Deere 650. You have picked out the ears, of course, as being the pin receiving hole in the rear portion of the body casting, have you not? A. Right.

Q. Now then, where is that hole in Deere rearwardly extending from any longitudinal face? A. Well, it is the rear of the face which we just discussed under "a", four or five inches.

Q. It is behind the lug which you say is the longitudinally extending underface, and therefore do you think that this fairly responds to the language of that claim that the ears are rearwardly extending from said underface? A. Yes, they are rearwardly extending, and they are attached to the same member, they are part of the same casting.

Q. But what is their association with this underface of the fixed member? A. Well, this doesn't call for any association.

Q. Doesn't it? [307] A. No.

Q. What do you understand by the term "rearwardly extending from", if that is not an association? A. Simply locates them, locates the ears.

Q. It doesn't tell you as an engineer anything about its position in relation to that underface? A. Simply extending rearwardly from said underface at the sides thereof, and there they are, attached to the same member along the side walls of the member.

Q. All right, let's pass on then to the next element, Element 2, which of course is the shank attaching member, and its introductory part, element 2, "a shank attaching member." Of course if we stopped right there the shank attaching member is present in Graham 798? Is that true? A. Certainly, it is present.

Q. It is true in Graham 811? A. Yes.

Q. It is true in Jeoffroy SC-580, Defendants' Exhibit 2? A. Yes, certainly has a shank attaching member.

Q. It is true in Cockshutt, Defendants' Exhibit 1, which was held not to infringe by the Fifth Circuit? A. Your question is, is the shank attaching member present?

Q. Yes. A. Certainly.

[308] Mr. Fishburn: Your Honor, I would just like to call your attention to the fact that this is not prior art, this Cockshutt device is not prior art in the same sense that these other devices are concerned to this patent in suit.

Mr. Morris: It is not offered as such, Mr. Fishburn. It is offered as bearing upon interpretation.

Mr. Fishburn: I just wanted the Court to understand that that is not prior art.

Q. (By Mr. Morris) All right. So then if this shank attaching member is to be distinguished from the shank attaching member in Graham 811 or in Jeoffroy SC-580, or in Cockshutt, it must depend upon some of the additional language with which that element is defined, mustn't it? Do you agree with that?

Mr. Gold: If Your Honor please, I believe Mr. Morris in his question also stated he would have to distinguish from Cockshutt. He just got through saying he admitted the Cockshutt was not prior art. I believe if you will have your question read back you will find it improper.

Mr. Morris: What is your objection?

Mr. Gold: That you are asking him if he doesn't have to disinguish from the Cockshutt device, which is not prior art in this case.

[309] Mr. Morris: All right. Of course that is a validity analysis and I wasn't intending to use it in that fashion, but I will break it in two parts.

Q. (By Mr. Morris) If the shank attaching member in Graham 798 is to be distinguished from the shank attaching member in Graham 811, or if it is to be distinguished from the shank attaching member in Jeoffroy SC-580, which are two elements of the prior art, then it must depend upon some of the further language in the claim which defines the element, mustn't it? A. Probably. I am not attempting to distinguish this thing, I am simply saying that they are present there or in the original testimony that this shank attaching member was present in these two patents.

Q. Yes, I understand that, Mr. Fenton, but I am trying to find out now what that means, what this element means. Let's get back to my question, please, sir. A. There are additional describing elements.

Q. Let's solve this one problem first. If we described the shank attaching member broadly as a shank attaching member and stopped right there, then it is equally present in Graham 811, Jeoffroy SC-580, any number of others, isn't it? A. Certainly.

Q. So that if the element is to be distinguished in this [310] claim from those prior devices, then it must depend upon the additional language describing the element in this claim, mustn't it? A. Well, I think so.

Q. All right. Then does that mean to you that this additional language should be given some significance? A. Certainly.

Q. All right. We come then to sub-element "a. an elongated plate portion." If we stopped there, that portion likewise would be present in Graham 811, Jeoffroy SC-580? A. That is a fair description for all of them, elongated plate portion.

Q. Fine. Then the sub-part (1), "provided with an upper face corresponding with and normally in contact with said underface of the fixed member," and there you said that is not literally present this morning, didn't you? A. That is right.

Q. Is that present in any other sense whatsoever in the Deere structure, Mr. Fenton? A. Well, it is an elongated plate portion, and the only thing that is not present is that

the upper face is in contact with the underface of the fixed member.

Q. In the Deere structure we have an elongated plate member? [311] A. That is right.

Q. Or shank attaching member, certainly nobody would question that? A. No.

Q. And you say it does not have an upper face corresponding with or normally in contact with said underface of the fixed member? A. That is right.

Q. And that is absolutely true, of course. Now then, does the upper face of this Deere 650 hinge member contact the fixed member of the Deere clamp any place whatsoever? A. No.

Q. Does the upper face of the Deere 650 hinge member perform any function in the operation of the structure? A. Certainly.

Q. What? A. It provides the hinge, the pivot.

Q. The upper face provides the hinge? A. Oh, the upper face?

Q. Yes. A. Oh, the upper face merely provides the shape and the strength.

Q. It is nothing more than the fact that we have a member which has a bottom and a top, that is all there is to [312] it, isn't there? A. Yes.

Q. And the top face of that hinge member just doesn't perform any function in the Deere structure whatsoever, does it, the functional performance? A. That is right.

Q. All right, sir. In Graham 798, what function does the top surface or upper face of the hinge member perform? A. It contacts the underface of the fixed member to provide the stop.

Q. It is the surface which contacts the underface of the fixed member to position the shank in normal operating position, is it not? A. That is correct.

Q. And it is expressly so defined in this claim, is it not? A. Yes.

Q. Now then, do you think it fair to say, Mr. Fenton, that the hinge member, shank attaching member in Deere 650 performs that function? A. No, that is the reason I said it wasn't present.

Q. It doesn't, does it? All right. You have said that it wasn't present, but then you followed up and said it was functionally present. Well now, tell me where it is that you find the function of the upper face of the 798 hinge member present in the upper face of the Deere [313] hinge member? A. In Item (2) here, we forget about the upper face, see, we don't mention the upper face. The shank attaching member functions by means of this bolt which attaches it to the shank, and then contacts the fixed member, you see.

Q. Well, that is not true, though, is it? A. Yes, it is true.

Q. Point it out, please. A. You asked how this functions.

Q. No, I didn't ask you that. A. You asked me—

Q. No, I didn't.

Mr. Fishburn: Let's see what you asked him.

Mr. Morris: I will have the reporter read my question back, please.

(Question read as follows:

"It doesn't, does it? All right. You have said that it wasn't present, but then you followed up and said it was functionally present. Well now, tell me where it is that you find the function of the upper face of the 798 hinge member present in the upper face of the Deere hinge member?")

Q. (By Mr. Morris) Do you have the question in mind? A. The question is how does the upper face function.

[314] Mr. Morris: No, would you—well, let me just reask it and save time.

A. Yes, sir.

Q. You have stated here that in the language of the claim the upper face of the hinge member in Graham 798 performs a definite function, that is, the function of contacting the underface of the fixed member to position the shank in operating position. Now, that is accurate, isn't it? A. Yes.

Q. All right. Now then, please tell me where there is an upper face of the shank attaching member in Deere

which performs that function. A. I told you that it did not perform it in this Item 1, not present.

Q. All right. So that neither the structure nor the function provided for that portion of the element is present in Deere 650, is it? A. Function of the plate, the shank attaching member, or the upper face?

Q. The upper face. A. Yes, not present.

Q. All right. You may return to the stand.

Now then, I take it that you want to say that if we don't confine that function to merely the upper [315] face of the hinge member and merely let it be broad enough to say that the hinge member forms that function, then you can find it present in Deere 650? A. It performs that function by means of its attachment to the shank. It is readily apparent, has been discussed here all during the two days.

Q. Is this what you are saying, Mr. Fenton? That because the shank is attached to the hinge member, the hinge member therefore performs the function of positioning the shank in its normal operating position? A. Yes, because it is the hinge member and is pivoted, and that controls through the pivot, it controls the angle, you see.

Q. Suppose you had a hinge member and no stop surfaces, what would stop it, what would position it? A. It wouldn't stop.

Q. Then is the fact that the hinge member is attached to the shank, does that fact have anything to do with where the shank comes to rest in home base position? A. Certainly it does, because of that nub which contacts the shank.

Q. Now, what nub are you talking about? A. Here is the stop (indicating).

Q. You are talking about the depending lug— A. That extends downward from the fixed member.

Q. The forward end of the Deere 650 structure? A. That is the wrong direction.

Q. I beg your pardon. Forward end of the Deere 650? A. Yes, that is the stop (indicating).

Q. Now, where does that in any way contact the hinge member or have any association with the hinge member

to perform this stop function? A. Well, it contacts the shank, but the hinge member, the pivot here, is part of that movement. You can't disassociate the hinge member from the shank when you are talking about the stop, because here is the other pivot point, see, so the two work together as a stop.

Q. Do you think, Mr. Fenton, that that is a fair interpretation of the specification of this element as it is set out here in Element 2 of Claim 1? A. It is a fair one on Element 2, on sub-heading (2), not (1), of course, as we have said. That isn't present.

Q. Well, in conclusion then, your view about Element 2 is that part of it is present and part of it is not present, is that it? A. That is right.

Q. Turn your attention to Element 3, "means connecting the elongated plate portion with the shank for maintaining the upper face of the shank in constant continuous contact with the underface of said plate portion of the [317] shank attaching member." Now, I believe you stated in direct examination that in the Deere 650 structure, that it is a forward fastening bolt which is colored in gray? A. That is right.

Q. Mr. Fenton, in the Graham 798 structure you have, of course, colored the fastening bolt at the forward end in gray? A. Yes.

Q. And I note that you have colored the depending loop or stirrup element of the hinge member in red. I wonder if that depending loop element at the rear has anything to do with the connecting of the shank to the hinge member for maintaining the constant continuous contact? A. Well, not directly. It is colored red because it is a part of the shank, of the shank fastening part. The shank doesn't fit very tightly in there, and therefore it wouldn't furnish a horizontal attachment. It might resist some movement.

Q. Mr. Fenton, if you eliminated the stirrup or loop element from the rear part of the hinge member in 798, and left in the device only the fastening bolt at the forward end, would you have an operative structure? A. Yes, I think you would.

Q. You would? [318] A. I don't think it would operate quite as well, but it would operate.

Q. Do you recall your testimony int the Jeoffroy case, in which you stated that the Jeoffroy HT-5 structure would not be operative without the stirrup or loop on the pivoted part? Do you recall your testimony to that effect? A. No.

Q. I will refer to the printed record in Case No. 15117 in the Fifth Circuit, at page 80 of that record, and first, to orient that testimony, Mr. Fenton, I have before me here and demonstrate to you a hinge member of the type that was involved in that lawsuit. This is a Joeffroy hinge member. This particular one is identified as HT-5A, and has the set screw in it, but I will remove the set screw so that it will be substantially identical with the hinge member which was involved in that case. Would you agree with that? A. Would I agree that when you take out the set screw it is about the same? Is that what you are asking?

Q. Yes. A. Yes.

Q. It is the Joeffroy type hinge member which was under consideration in that case and about which you were testifying, isn't it? [319] A. Yes. I believe, however, that the testimony was offered in the controversy regarding the tightness of set screws.

* * *

The Court: We will recess until 10 a.m. tomorrow morning.

(Adjournment.)

---

[320] MORNING SESSION, FRIDAY, MAY 4, 1962

F. C. FENTON resumed the stand and testified further as follows:

Cross-Examination (Continued) by Mr. Morris.

Q. Mr. Fenton, at the close of yesterday's testimony we were considering Element 3 of Claim 1 of the 798 patent

as applied to the Deere 650 structure, having on the easel Plaintiffs' Exhibit L, which is the claim chart and colored drawings of the patent structure, and the Deere structure. I believe I had just asked you whether or not the structure of 798, or as disclosed in the drawings of 798, would be an operative structure without the stirrup or loop portion at the rear of the pivoted member, the part that embraced the shank, and I believe you had stated that it would, that it might not be quite as good but that it would be an operative structure. Am I recalling it correctly? A. Yes.

Q. Now then, I had just asked you if in the Jeoffroy second case, in which this patent was first in issue, if you had not stated that a structure of this kind would not be operative if the loop or stirrup element were not present, and I believe you stated that you did [321] not recall any such testimony as that? A. Yes. But that was quite a few years ago, and I reviewed the testimony, and I did make that statement.

Q. All right. You did make that statement, and you are now satisfied that that is a true statement, are you not? A. The one in the former case.

Mr. Fishburn: Which statement are you referring to?

Q. (By Mr. Morris) The statement you made in the former case. A. Yes.

Q. So that without the loop or stirrup element this would be an inoperative structure? A. I said yesterday that it would operate under certain limited conditions.

Q. But it would not operate for the purposes for which it is intended, that is— A. Not fully, to—

Q. —to trip or rock and return to operating condition in rock country? A. Not in rock country. I think without that stirrup it would operate in cultivating soil, where the severe shocks are not—that is what I had in mind yesterday.

Q. Where the severe shocks are not present or where the [322] magnitude of the rocking motion is not so great? A. Yes.

Q. All right, sir. Now then, let's turn our attention to means, Element 3, "means connecting the elongated plate portion with the shank for maintaining the upper face of

the shank in constant continuous contact with the underface of said plate portion of the shank attaching member," and I think we now can conclude, can we not, that the bolt at the forward end by itself is not a means sufficient to perform that function in this structure? A. Well, it is not the only means in this structure. Both elements are present.

Q. All right. So that this mechanical element, Claim 3, as applied to the Graham 798 structure, includes then not only the fastening bolt at the forward end but also the stirrup or loop at the rear? A. That is right.

Q. And it takes the cooperation of both of those elements in order to perform the function called for in this structural element 3? A. There is a distinction there in that the stirrup at the rear acts in the rebound largely and it actually doesn't hold the shank in constant continuous contact with the face of the hinged member. It cooperates but [323] it doesn't—if there is some clearance there it may have a little play.

Q. There could be some slight clearance in there, that is true enough, but that element is necessary and does cooperate with the fastening means at the front end to hold the shank in the device, in the 798 structure? A. That is right.

Q. For example, let's show here what would happen. I will again use for demonstration Plaintiffs' Exhibit D-1, which is the Jeoffroy hinge member from their HT-5 type structure that was involved in the second Jeoffroy case, and I will remove the set screw from it so that we won't have any contention about the effect of that set screw. Now then, if we didn't have this loop or stirrup element at the rear—I will hold this in position as if it were in the plow—and this shank has encountered a big rock and has tripped back in that direction and is up, then when it turns loose it drives that shank forward and downward and in the upper shaft portion of the shank or forwardly extending portion of the shank that comes in to the device, it will drive that device downward somewhat, too, will it not? A. Yes.

Q. And if there is nothing to support the shank at the [324] rear end, quite shortly or just a few times in all

probability this fastening bolt at the front end will be snapped off or sheared off? A. It might be.

Q. Or else the hinge member itself will be twisted in two or something of that sort, wouldn't it? A. Might be.

Q. Now, let's consider again our language of the element, the structural element. This says means as applied in Claim 1, Element 3, says means, and it is a means to perform a function, isn't it? A. Yes.

Q. All right. Now then, are we agreed then, Mr. Fenton, that the means to perform the function as specified in that element in the 798 structure is the bolt plus the stirrup or loop at the rear? A. Except that the stirrup at the rear does not maintain the upper face in constant continuous contact.

Q. It by itself certainly does not, does it? A. No.

Q. And neither does the bolt by itself, does it? A. Well, the bolt does at the front end.

Q. At the front end? A. Yes.

Q. But throughout its length it does not, does it? [325] A. That is right.

Q. So that it takes the cooperation of the two to perform the function of maintaining the constant continuous contact of the upper face of the shank with the underface of the hinge member, is that correct? A. That is right.

Q. All right. Now then, will you transfer your thoughts, please, to the Deere 650 structure as shown in the drawing on the right-hand side? I believe in your direct testimony yesterday you stated that structural Element 3, Claim 1, is the fastening bolt at the forward end? A. That is right.

Q. Now, the same thing is exactly true in the Deere 650 as would be true in the 798 type structure, that the forward fastening bolt alone will not perform the function. Is that true? A. Well, as I said, it will hold the front end in contact but not along the entire face of the pivoted member.

Q. And if the only means we had in the device to perform the function were the fastening bolt it likewise would be an inoperative structure, would it not? A. Except in light work.

Q. It would not be an operative structure for the purposes intended for this device, would it? [326] A. One of the purposes.

Q. All right. Now then, so the forward bolt in Deere 650, which you testified yesterday satisfied the Element 3, does not satisfy Element 3, does it? A. There is an additional support, is there not?

Q. There is, but did you say yesterday that there was any additional support in Deere 650 which was a part of element "b"? A. Well, perhaps not, but it is there.

Q. And the fact is there isn't any other part in the Deere structure which is a part of Element 3, is there? A. There is another part of the Deere structure which supports the rear of the shank.

Q. Yes, but not a part of the hinge member? A. Not a part of the hinge member.

Q. Nor attached to the hinge member? A. It is a part of the fixed member.

Q. Right. It is not a part of the hinge member, it doesn't cooperate with the hinge member to perform the function of supporting this shank, does it? A. No, but it supports the shank.

Q. It supports the shank directly at the rear by the fixed part itself, doesn't it? A. Yes.

Q. Then in order to find a response for the mechanical [327] structure of Element 3 in Deere 650, you must bring into play the forward fastening bolt colored in gray, plus the rear supporting portion of the fixed member which extends down underneath the shank at the rear? A. That is right.

Q. Do you think, Mr. Fenton, that the rear supporting web of the Deere 650 clamp is a part of the structural Element 3, as defined in Claim 1? A. No, it is not mentioned in the claim.

Q. All right. So that brings us to the necessary conclusion that the structural element as defined in Element 3 of the patent is not present in Deere 650, is it? A. No, but I think the equivalent is there in the part of the fixed member which supports—

Q. You have testified at some length about equivalents and I am just going to let you go ahead, even though it does involve a problem of what you mean by equivalents. Please tell the Court how the rear supporting web of the Deere 650 clamp is structurally equivalent of the means specified in Element 3 of the Graham Claim 1? A. In Graham the shank at the rear supports—I mean the stirrup at the rear supports the shank, not tightly but loosely, and acts to prevent the shock effects from damaging the shank and its attaching member.

[328] Now, in the Deere 650 we have a similar piece of metal which extends across beneath the shank and supports the shank loosely, serves to support the shank from falling downward and serves to retain it during the shock action, therefore, it is somewhat equivalent, structurally at least.

Q. Do you understand the term, mechanical equivalent, Mr. Fenton, as applied to a structural element as meaning substantially the same means operating in substantially the same way to perform substantially the same function? A. That seems fair to me, yes, sir.

Q. Now, then, wherein is the supporting web construction at the rear of the Deere 650 clamp substantially the same means as a supporting stirrup or loop which is a part of the movable part? A. Both parts are situated directly under the pivot member, and both are rigid and support the shank in the same equivalent manner.

Q. Well now, what do you mean by the same equivalent manner? Let's examine that. The Jeoffroy structure supports the shank by means of cooperation with the hinge member, doesn't it? A. Yes, but it is just under the pivot in the same—

Q. That doesn't make any difference, but it supports it by cooperation with the hinge member, doesn't it? [329] A. That is right.

Q. The Deere means supports the shank by cooperation with the fixed member? A. That is right.

Q. It is a part of the fixed member? A. But it is in the same location.

Q. Really and truly, Mr. Fenton, all you are saying is that there is an element or a part which does perform the function of supporting the shank? A. That is right.

Q. That is situated at the rear of the clamp? That is it, isn't it? A. In the same position beneath the pivot point.

Q. And in that sense you are willing to say that it is an equivalent to a means which supports the shank from the hinge member? A. In function and operation.

Q. Now then, as the Graham 798 hinge pivots along with the shank—and I use here without numbering it for the record and without cluttering the record with further exhibit numbers an aluminum model of the Jeoffroy HT-5 structure so we can demonstrate with ease—first, the hinge member of the Jeoffroy HT-5 in all respects, even to form, is indistinguishable from the 798 hinge member, isn't it? [330] A. Yes, except—

Q. Except of course that the rod passes through in 798 while it goes to the side in Jeoffroy? A. Yes.

Q. Now then, as the hinge member of the 798 type pivots what happens to the supporting element or stirrup at the rear? A. It also pivots.

Q. It pivots right along with the hinge member? A. Yes, sir.

Q. In the Deere 650 structure, when the hinge member pivots along with the shank, what happens to the supporting element at the rear of the fixed part of the clamp? A. It doesn't move.

Q. Stays right where it is, doesn't it? A. Yes.

Q. So it doesn't cooperate with the hinge member to support the shank, does it? A. No, but it supports the shank, it does support the shank at that point.

Q. Yes, but it doesn't cooperate with the hinge member to support the shank at that point, does it? A. No.

Q. Nor does it move with the hinge member? [331] A. That is right.

Q. Then can you say really and truly, Mr. Fenton, that the supporting portion of the fixed member in Deere performs the function in substantially the same way, that is, the function of supporting the shank, in substantially the

same way as does the supporting element of the hinge in 798? A. Yes, I think it does, substantially the same way. The tilting action of that stirrup doesn't appeal to me as being significant.

* * *

[333] Q. (By Mr. Morris) It is your view that any structural element of a spring clamp for attachment of the shank to the frame of the plow, which supports the shank at the rear, regardless of what other element of the clamp it cooperates with or regardless of what part of the main part of the claim it is associated with, would satisfy the structural call of Element 3 of Claim 1? A. Obviously I couldn't say until I saw the element that you are talking about, perhaps you have in mind. Certainly I wouldn't say that any arrangement would satisfy it, no. But I have testified that I think this device does satisfy it, and that is my opinion.

Q. That is as far as you would want to go with it? A. Yes, I think so.

Q. I wonder if you have since yesterday or during the court trial, if you have examined the Cockshutt clamp which was held not to infringe the patent, to consider the means which it has for supporting the shank at the rear? A. No, I haven't examined it.

Q. From looking at it here can you tell right easily what means there is at the rear for supporting shank? A. That is the rear you have there, is it?

[334] Q. Yes, sir. A. Well, it is a U-shaped bolt.

Q. It is a U-shaped bolt which goes through the rear part of the fixed member and passes down underneath the shank to support it? A. Right.

Q. Is that in your opinion distinguishably different as a mechanical element from the rear supporting—A. Where is the fixed member—I mean the pivot in that clamp?

Q. Shall I take it apart for you? A. No, I thought we could see it from here.

Q. You can. A. This is the pivot (indicating).

Q. Pivot at the rear just like the others? A. Yes.

Q. Pivot pin is through the hole? A. This pivot is slightly ahead of this supporting member, which would make a little difference, but I would say that is substantially the same as the Deere.

Q. The supporting means at the rear of the Cockshutt clamp then, which constitutes the short U-bolt passing through the rear portion of the fixed member, is in your opinion substantially the same supporting means as the web portion, supporting web portion of the [335] fixed member of the Deere clamp at the rear? A. Yes. It serves the same purpose.

Q. You consider then Element 4, the transverse pin—now again the transverse pin here in Element 4 as a structural element is described in terms of the function which it performs and the position in which it is situated, is it not? A. Yes.

Q. You have pointed it out for us in 798 as the member colored in brown and also in Deere 650 as the member colored in brown? A. That is right.

Q. Do you feel that this language, "connecting the shank attaching member to the fixed member at the rear ends of said normally contacting faces," is of any significance or has any place as a part of the structural element? A. Why, certainly it is a part of the structural element.

Q. Would just any pivot pin upon which the shank and shank attaching member pivot satisfy the structural call of that element? A. Any pin?

Q. Just any pivot pin. A. No. The location is specific here, relatively specific.

Q. Relative and it is specific relative to what? [336] A. At the rear ends of the normally contacting faces of those two members.

Q. It is specified in terms of its position in relation to the contacting faces? A. That is right.

Q. And those two contacting faces would be the longitudinally extending faces of the fixed member and the corresponding upper face of the hinged member which are normally contacting each other, is that true? A. Yes.

Q. And of course as applied to the 798 disclosure, that is precisely accurate, isn't it? A. Yes, it is near the rear end of the contacting faces.

Q. Is it at the rear of any contacting faces in Deere 650? A. Yes. It is at the rear.

Q. At the rear ends? A. Not at the ends, but it is at the rear.

Q. Well, does rear ends mean anything to you in that structural element? A. Well, there is a slight difference there. You have an extension in your hinge member there in the Deere structure.

Q. We have an extension? A. Extension of the pivoted member.

Q. Well, the pin is not at the rear end of the— [337] A. Not quite yet.

Q. —of the hinge member. Of course that doesn't have anything to do with the problem of contacting faces though as described in this element, does it? A. It is near the rear end.

Q. Is it at the rear end of any contacting faces? A. It is at the rear end of the pivoted member.

Q. It is at the rear of the pivoted member, but is it at the rear of any contacting faces? A. Well, it can't be at the face. It is on a large portion of the—must have strength to the parts, so you can't put it right at the rear point, of course.

Q. I believe you have already testified up here under Element 2 that there isn't any contacting face of the hinge member at all in Deere 650, is there? A. Certainly; the contact face is between the shank and the hinge member.

Q. Well, is that the face that Element 4 is describing? A. Certainly.

Q. Read it again, please. A. Aloud?

Q. No, you needn't read it aloud. Just get it in your mind. A. I assume this to mean the contacting face between the hinge member and the shank.

Q. All right. Let's consider it then for a moment— [338] A. That is the only contacting face in this Deere structure.

Q. Let's consider the element then a little further. "a transverse pin pivotally connecting the shank attaching member to the fixed member at the rear ends of said normally contacting faces," and up here in Element 2 we first have an upper face—up in Element 1 of course we have a longitudinally extending underface of the fixed member, do we not? A. Yes.

Q. And in Element 2 we have an upper face of the plate portion corresponding with and normally in contact with said underface of the fixed member? A. Yes.

Q. Well, don't you think that in Element 4 down here the contacting face is referred to when it says, "said normally contacting faces" are the faces described in Element 1 and Element 2? A. No.

Q. You don't? A. No. I think under Element 2, subhead No. (2)—

Q. You think the contacting face referred to then, the normally contacting face referred to is only the contact of the shank face with the underface of the hinge member? A. Yes. As referred to in Element 2 there.

[339] Q. And it has no relation to a corresponding contacting underface of the fixed member? A. No.

Q. Mr. Fenton, I would like for you to take here before you a copy of the file history in this case.

* * *

Q. (By Mr. Morris) I would like for you to turn, if you will, please, to page 34. I don't believe the sheets there have any lines on them or line numbers on them. I can pick out the line for you, let me point it out, the middle of the second paragraph, the sentence beginning, "the contacting faces." Would you read that, please. A. "The contacting faces of applicant's device extend substantially the full length of the mounting and no one portion of one face contacts the other face before other portions come in contact."

Q. All right. Then pass on to pages 35 and 36, "Claim 13." Do you find that? The paragraph starts off, "Claim 13." A. Page 35?

Q. Yes. I beg your pardon, it is on page 36. [340] A. Yes.

Q. Would you read that paragraph, please. A. "Claim 13 distinguishes from the references by defining fixed member having a longitudinally extending underface terminating forwardly of the transverse member to which the mounting is adapted to be fixed and a shank attaching member having an elongated plate portion provided with an upper face corresponding with and normally in contact with said underface of the fixed member and provided with a longitudinally extending underface in engagement with the corresponding upper face of the shank."

Q. All right. Is there anything—when that discussion of these longitudinally extending faces and contacting faces was brought into that argument there in the file wrapper, is there anything that distinguishes one contacting face from another or permits you to say that this language of the claim applies merely to the contacting faces of the shank and hinge member and has no relation to the contacting faces of the fixed member and the hinged member? A. That is a rather involved question. You say is there anything in here that says that?

Q. Well, is there anything in there that indicates to you that there is some reason for selecting one of these [341] faces rather than the other faces as being the faces referred to in the claim? A. I told you, when you interrupted me, that Item 2 under there specifies that these are the faces between the shank and the attaching member.

Q. How is it that you conclude that it refers only to the contacting face between the shank and the hinge member and not the contacting face of the hinge member with the fixed member? A. Because the fixed member is taken care of in the claim above, and this is a new—I take it that this refers to the last mentioned face, which is in Item 2 under there.

Q. So summarizing, you are satisfied that the structural element as called for there has a response in 650 because the transverse pin is at the rear of the hinge member? A. Yes.

Q. Then in Element 5, the coil spring, I suppose there would be no doubt about the coil spring in both devices being seated upon the forward part of the fixed member? A. No.

Q. That is plain enough, isn't it? A. They are similar.

Q. Then Element 6, "means having connection with the [342] forward end of the shank and with the other end of the coil spring whereby the spring yieldably maintains said normal contact of the upper face of the plate portion of the shank attaching member with the underface of the fixed member to maintain the normal plowing depth of the ground working tool."

Now, as applied to the 798 structure, that mechanical element of course is literally responded to, isn't it? A. Yes.

Q. Now, this element is another one that is described in terms of the function which is performed by the means, isn't it? A. Yes, that describes the working of the device.

Q. Now you picked out of course the spring rod here and have colored it purple or lavender, as being the element. Of course the claim doesn't say anything about a rod. The reason that responds is because it is an element which does perform those functions prescribed for that mechanical element. Is that true? A. That is right.

Q. All right. Now then, to apply that mechanical element as so defined in terms of its function, do you think that would be necessary to find an element in an accused structure or some other structure which performs [343] the functions as prescribed for that mechanical element? A. Yes, I certainly think so.

Q. As a matter of fact, that is the only way that you can recognize the element, isn't it? A. Perhaps.

Q. Then when we look at the Deere 650 structure, the spring rods acting in response to the spring pressure, do we find that they perform the function of yieldably maintaining normal contact of the upper face of the plate portion of the shank attaching member with the underface of the fixed member? A. No, they do not.

Q. They do not? A. No.

Q. So we do not have a response for the functional call of that element, do we? A. The contact is on the spring —on the shank and not on the fixed member.

Q. The function of permitting the shank to rock and return to position is performed in Deere 650 certainly, nobody would question that? A. No.

Q. But the function as specified or the mechanical equivalent in Element 6 is not performed, is it? [344] A. Yes.

Q. So I think we must conclude that yesterday's testimony that element 6 of Claim 1 is not present—to the effect that it was present in 650 is incorrect, and that the element is not present in Deere 650? Isn't that where we are? A. Well, the same point is argued up in Claim 1, that you have substituted the end of the shank for the end of the hinge member. The contact is there, and because the two are bolted together there they act as a unit at that point, you see. Now, if it is equivalent up above it is also equivalent here functionally.

Q. You are willing to say then that this structural element finds a response in 650 because the function of positioning the shank is performed? A. Yes, sir.

Q. That is the fact about it, isn't it? A. That is right. The exact mechanical equivalent is not there.

Q. The mechanical equivalent is not there, is it? A. No.

Q. All right, sir. Let me go just one point more on that element. Then I think we are ready to conclude as to Element 6 of Claim 1, that it is not literally present [345] in Deere 650 nor is its mechanical equivalent present. There is a structure which performs the same function? A. Yes.

Q. I would like to back up just a moment and give a bit more consideration to structural element 1 and particularly sub-part "a" of Claim 1. We are referring here to the fixed member having "a longitudinally extending underface terminating forwardly of the transverse member to which said mounting is adapted to be fixed." Now, you have testified, of course, before that the depending lug at the forward end of the Deere 650 is sufficiently—may be sufficiently called a longitudinally extending underface to satisfy the final response to that structural element of the claim, have you not? A. Yes.

Q. Now I would like to again refer you to the file wrapper history, Mr. Fenton. In the very same reference I called your attention to a moment ago, on page 34, which is the remarks being made, "the contacting faces." Now

read that again, if you will, please. A. "The contacting faces of applicant's device extend substantially the full length of the mounting and no one portion of one face contacts the other face before [346] other portions come in contact."

Q. Does that language as set out there in the file history give some substance to the proposition here that the longitudinally extending face that is called for in the claim is a face which extends substantially the length of the clamp structure? A. This statement in the file wrapper is not in the claims. There is nothing in the claims that says the face must extend the full length.

Q. No, but that is what the applicant says is the meaning of this language, isn't it? A. No, this is a discussion—as I understand your portion here, this is discussion between the attorney and the Patent Office.

Q. Those are the remarks made by the applicant's attorney? A. That is right, yes.

Q. To the examiner? A. Yes, sir, but it doesn't appear in the patent.

Q. Well, would you think that the term "longitudinally extending underface" fits into the language of the remark which we just read, "contacting faces extend substantially the full length of the mounting"? A. No, not in this Deere case, of course. But now you are reading in something that doesn't appear in the patent. I don't know what—it is a legal point perhaps, [347] but I don't know what importance this discussion has between the attorney and—

Q. What do you think this following portion of the language means when it says, "extend substantially the full length of the mounting and no one portion of one face contacts the other face before other portions come into contact"? A. What do I think of that?

Q. Was that projecting the idea that these corresponding contacting faces, the underface of the fixed member and the upper face of the hinged member would come together along their full length at the same time? A. Well, they certainly do in the Graham patent, in the Graham device, certainly come together over substantially their full length.

Q. And that I assume in no way changes your view that a mere point contact at the forward end, or a mere lug at the forward end is the face called for? A. No, it doesn't change it.

Q. All right. Claim 2 of the 798 patent is of course not in issue as applied to the 650 structure. I suppose you are familiar, though, with Claim 2? A. Yes, sir.

* * *

[348] Q. (By Mr. Morris) Let's turn our attention then to the Deere 100, Mr. Fenton. A. Claim 1?

Q. Claim 1. I have replaced on the easel here Plaintiffs' Exhibit M, which is the colored claim chart, the Deere 100 clamp on the right, the drawing on the right. Again, right at the outset, of course the introductory part, "In a plow having a frame," in this instance a transverse frame. You have colored the transverse beam element in blue. In the 798 structure it is an I-beam type device, in the Deere 100 it is a square tubular beam. Is that correct? A. That is correct.

Q. And the shank in the introductory portion of course is called for and is colored green on the chart? A. Quite right.

Q. Then we come to the general introductory language as to a mounting for pivotally attaching the tool, and we come to Element 1, the mounting including "a fixed member adapted to be fixed to the transverse member [349] of the frame and having

"a. a longitudinally extending underface terminating forwardly of the transverse member to which said mounting is adapted to be fixed."

Now, yesterday I believe you stated that there was no such element in the Deere 100 structure, in the clamp itself?

A. No, in the part that is colored yellow there, which is the clamping member, there is no longitudinally extending underface.

Q. The clamping part in yellow does not have a longitudinally extending underface? A. That is right.

Q. And it is only by the contention that since the clamp is attached to the frame the frame essentially becomes a part of the clamp and therefore the underface of the frame member will satisfy the structural element of a longitudinally extending underface of the fixed member? A. That was my testimony, yes, sir.

Q. Then the frame of the plow ceases to be a separate element, it ceases to be a plow frame, it becomes a clamp? Is that true? A. In a sense, yes.

Q. Or if you want to put it the other way around, the clamp ceases to be a clamp, it becomes the frame of the [350] plow? A. No.

Q. Becomes a part of the frame? A. No. No, I don't think your second statement is justified.

Q. Doesn't work both ways? A. No.

Q. All right. Don't you think as an engineer, Mr. Fenton, that when we are talking about the mechanical element as specified there that we are talking about something besides the beam of the plow or the patentee is talking about somethng besides the beam of the plow? A. Well, the beam is mentioned in the patent.

Q. Oh, yes, and it describes it up at the start as a plow having a beam, transverse frame? A. Yes, to which the fixed member is adapted to be fastened.

Q. Now, aside from patents, if you as an engineer took a set of specifications and set out to build a plow tool and at the outset it provided for a frame member and then it provided for a clamping member to clamp some other part to the frame, would it be your thought that the specifier, whoever made the specifications, was talking about the same thing when he said frame in the first part and clamp in the second part? [351] A. Well, I don't get any point out of your question.

Q. Well, would you try to answer it, please, sir? A. It would all depend on the circumstances, the device which you are talking about. I don't think the question is—

Q. I don't suppose engineers are any different from the rest of us. We use the English language and we have words that mean things in the English language, don't we? A. We hope so.

Q. And do you think that a fixed part of a clamp, by any kind of a definition at all, can be transferred over to become a frame of a plow? A. It does become a fixed member when it is clamped to the frame. You see—I explained that all yesterday, I think. My assumption is this, that this device has no stop for the spring action, which other folks have testified here as being absolutely necessary, and since it doesn't have a stop other than the underface of the beam, the plow beam, we are justified in assuming, as far as the functioning is concerned, that this is part of the fixed member.

Q. All right. A. That is the basis on which I gave my testimony.

Q. Let's look at it then just a bit farther, Mr. Fenton. [352] You are willing to say that the function performed by the underface of the fixed member in 798 is performed in Deere 650 and therefore, since the function is performed, the element, the structural element is sufficiently satisfied? A. Yes.

Q. All right. But again, just as you said in Element 6 of Claim 1 as applied to the 650, you would agree with me, would you not, that the mechanical equivalent of the structural element as called for in Claim 1, sub-part "a", or Claim 1, Element 1, sub-part "a", is not present in Deere 100?

Mr. Fishburn: If Your Honor please, I think the witness is referring to the fact features—

Mr. Morris: I don't want what your understanding of the witness is, Mr. Fishburn, I am entitled to cross-examine this witness and I object to your suggesting what the witness means or what his answer is.

Mr. Fishburn: I want to make the statement that when you were interrogating this witness about the mechanical equivalent you were referring to this hinge member—

The Court: What is your objection, Mr. Fishburn? [353] Mr. Fishburn: My objection is to his questioning this witness about the mechanical equivalent in this patent, in the first place, that is the function of the Court. When he asked this witness if this mechanical equivalent was here in Element 6, the witness said yes, but he was im-

mediately interrogated before about the hinge member not going out to the end of the shank. My point is that that is the question for the Court to determine, whether or not they are mechanical equivalents, and not this witness.

Mr. Morris: I didn't open up the inquiry about mechanical equivalent.

The Court: The plaintiffs did open up the inquiry about mechanical equivalent. I think it is proper cross-examination.

Q. (By Mr. Morris) Now, Mr. Fenton, my question is this. You are satisfied that the function performed by Element 1, sub-part "a", is present in Deere 650, but you will agree freely with me that the mechanical structural equivalent is not present, will you not, in 650? A. No, I wouldn't agree with you.

Q. You won't agree with that? A. No, because it is my contention that the square beam of the plow becomes basically a fixed member when [354] this is clamped to it.

Q. All right, let's come back to our primary steps of a, b, c. You understand the term mechanical equivalent as applied to a single element as meaning substantially the same means to perform substantially the same function in substantially the same way? A. Yes.

Q. All right.

* * *

[356] Q. (By Mr. Morris) Now then, coming back to our question, in the 798 structure, the mechanical element as defined in Element 1, sub-part "a". You have stated here that the longitudinally extending underface called for there is to perform the function of providing the stop or positioning of the shank? A. That is right.

Q. Now, to do that it is the body part of the clamp itself or fixed part of the clamp itself which does that positioning, isn't it? A. In Graham?

Q. In Graham. A. Yes.

Q. In Deere 100, the body portion or fixed portion of the clamp itself does not contact the shank attaching member to position the shank in any way whatsoever, does it? A. No.

Q. So that the fixed part of the Deere (650) clamp does not perform the function of providing the stop or positioning the shank in its home based position, does it? A. No.

Q. It is the beam of the plow which does that? A. To which the fixed part is clamped.

[357] Q. Is attached. All right. I beg your pardon, I did say 650. I don't mean the 650, we are talking about the 100. A. The 100, yes, sir.

Q. And whatever questions I may have phrased here in this last course of examination were not directed to 650, they are directed to Deere 100, which is the chart we have on the easel.

Now, you didn't misunderstand me, did you, Mr. Fenton? A. No, sir.

Q. And it wouldn't change your answers, by getting our focus back on 100? A. No.

Q. All right. Of course I don't think we need to dwell at length on Element 2. I will by-pass sub-part b. of Element 1. You have already explained your position about that, and I will not go into it any further. Element 2, "a shank attaching member having

"a. an elongated plate portion provided with

"(1) an upper face," and so on, you have explained your position on that, and your testimony is that the way you find a response for that structural element * * * in the [358] Deere 100 structure you find a section of the shank attaching member which contacts an underface of the beam? A. That is right.

Q. And that, as you have already explained, in your mind is the same thing and satisfies the structural call of the element as if it contacted the underface of the fixed member? A. Correct.

Q. In the 798 patent structure, Mr. Fenton, what element does the hinge member cooperate with in positioning the shank? A. Cooperates with the upper face—the lower face of the fixed member and the springs and bolts.

Q. And in Deere 100 the upper portion of the shank attaching member, to perform a positioning function, cooperates with the frame of the plow, doesn't it? A. Yes.

Q. Now, in Element 3, means for connecting the elongated plate portion of the pivoted member with the shank. Of course there is no question that that is present both in 798 and in Deere 100, is there? A. No, sir.

Q. That is quite evident. Here in Deere 100 we have the full means called for, don't we, that is, in this [359] instance a fastening bolt at the forward end in conjunction with a strap and two bolts at the rear, all of which elements cooperate with the hinge member to fasten the shank to the hinge member, don't they? A. Right, yes, sir.

Q. No contention about that. Element 4, "a transverse pin pivotally connecting the shank attaching member to the fixed member at the rear ends of said normally contacting faces." I assume here your testimony would be the same in applying the structural element to Deere 100 as it was in Deere 650, because of the fact that the pivot pin is located at the rear of the structure, it would be your thought that it responds to the structural language of being located at the rear end of said normally contacting faces? A. Yes, the pivot is entirely to the rear of those contacting faces. That is, it is past the middle, at least.

Q. It is somewhat to the rear of the middle? A. Yes.

Q. To the rear of the middle of the contacting face of the hinge member and of the upper face of the shank. Where is it in relation to any contacting face of the fixed member that you find? [360] A. Well, it is to the rear of our bottom of the beam, which in my contention is the fixed member.

Q. Consider the next element, Element 5. "A coil spring having one end seated on the forward end of the fixed member." Of course that is certainly present, isn't it, in Deere 100? A. Yes, I think so.

Q. No question about it. Pass to Element 6, "means having connection with the forward end of the shank and with the other end of the coil spring." Let's stop right there before we consider the rest of the language. I believe you said you find that present in Deere 100. Will you tell us how, please. A. Well, I think I didn't say that was present in the direct testimony. I said that contact

between the means is through the hinge member, which in turn is bolted to the shank, you see.

Q. All right. So the structural element as called for in the claim is not present in Deere, is it? A. No. I think you misquoted me as to my testimony yesterday.

Q. I didn't mean to misquote you, Mr. Fenton. That is the way I understood your testimony. So we are together on it then, now, that the structural element as defined in the claim is not present in Deere 100, is it? [361] A. Not exactly, no.

Q. As a matter of fact, in order to find any structural response to that structural element at all you have to bring into play additionally the fastening bolt colored in gray which you have already testified was the means specified in Element 3? Correct? A. And also serves this additional need.

Q. So that in order for you to find any kind of structural response at all to the first part of Element 6 you must bring into play not only the spring rod and its connection with the hinge member but in addition the fastening means which fastens the hinge member to the shank, is that true? A. That is right. And bolted together there, that gray bolt.

Q. Now let's consider the rest of the language of the element: "whereby the spring yieldably maintains said normal contact of the upper face of the plate portion of the shank attaching member with the underface of the fixed member to maintain the normal plowing depth of the ground working tool." Now since we have already agreed up in Element 1 that you do not have any such normally contacting faces of the hinged member and the fixed member, then you don't have any response to the functional language of Element 6 either, do you? [362] A. No, I don't agree with you there.

Q. You don't? A. No. I contend that we do have up there those contacting faces, and therefore this acts in the same way to maintain this normal working relation.

Q. And you do that entirely on a functional basis, do you not, Mr. Fenton? A. No, not entirely.

Q. Will you agree that the structure as defined in Element 6, or the function as defined in Element 6, that is,

"whereby the spring yieldably maintains said normal contact of the upper face of the plate portion of the shank attaching member with the underface of the fixed member" is not present? A. Yes.

Q. All right. So the structure— A. The fixed member includes the frame. We go back to that.

Q. It is only included if the frame is brought in as a part of the fixed member? A. Yes, sir, quite right.

Q. Otherwise the frame is not properly a part of the fixed member, then there is no structural response in Deere 100 for Element 6, is there? A. That is right.

Q. All right. Thank you. Let's turn our attention to [363] Claim 2, structural elements, as applied to Deere 100. Down through sub-part 2 of Element 2, the language is precisely the same as Claim 1, is it not? A. Yes, sir, I think so, exactly the same.

Q. Yes, sir, word for word. There is no need for us to further discuss that portion of it then, is there? A. I agree.

Q. All right. We come then to Element 2, Subpart b, "said shank attaching member having a lug extending upwardly between said ears of the fixed member and disposed at the rear end of the plate portion and above the plane of the underface of the fixed member."

Now as I understand your testimony, the lug of course you find as the upstanding portion at the rear of the Deere 100 hinge member? A. That is right.

Q. Of course as far as the lug language is concerned it is there, nobody challenged that. But then it is described, though, in terms of a position, "disposed at the rear end of the plate portion and above the plane of the underface of the fixed member."

Now then, as I understand your testimony, again, the way that you find a structural response to that element is by calling the under surface of the beam the underface of the fixed member, then the [364] pivot pin is located above that point? A. That is right.

Q. And you find the response? A. That is right.

Q. So that again if the beam is not properly considered a part of the fixed member, then there is no structural response for that element, is there? A. That is right.

* * *

(Noon recess.)

---

[365] AFTERNOON SESSION, FRIDAY, MAY 4, 1962

F. C. FENTON resumed the stand and testified further as follows:

Cross-Examination (Continued) by Mr. Morris.

Q. I believe that will conclude our discussion, Mr. Fenton, of the sixth element of Claim 2 as applied to the Deere 100 structure. I would like to back up just a minute and consider one point in Element 1 of both Claims 1 and 2, and it is in the sub-part "a" again.

We have talked at some length about the longitudinally extending underface of the fixed member, but I don't believe we have specifically pointed out the language "terminating forwardly of the transverse member." Now in the 100 clamp, if the frame member is construed as a part of the fixed member in order to satisfy your structural requirement of a longitudinally extending underface, then what are you going to do with the additional call of that structural element that the underface terminate forwardly of the transverse member? A. Actually, it terminates at the edge of the fixed member, not forwardly.

Q. So that whatever function there is for the forward [366] termination wouldn't be present, would there? A. The forward end of it. I don't know whether that would satisfy it. The forward end of the beam.

Q. In any event, it doesn't truly respond to the language of the element, does it? A. Not completely.

Q. Now I would like to turn back to the broad consideration with which we commenced our discussion of structural elements, and I believe we agreed at the very outset of the cross-examination here that the structural

elements basically are a fixed member for attachment to the frame of a plow, a movable member, or shank attaching member, a pivot pin, which connects the shank attaching member to the fixed member, a fastening means for fastening the shank to the hinge member, or shank attaching member, a coil spring, and the rod means for transmitting the spring pressure to the other parts of the device. That is correct, isn't it? A. Did we include the frame too?

Q. Well, taking the frame, of course, of the plow and the shank of the ground working tool as coming into the structure. A. Yes.

Q. All right. Now then, whenever there is language in any element of the claim that goes beyond the broad statement [367] of the element, that would constitute some kind of a limitation or further defining of the element, would it not? A. Yes.

Q. All right. And would it be your view, Mr. Fenton, that in construing the elements, the structural elements as defined in the claims that the additional limiting or defining language which is employed in the particular element should be given some application? A. I think so, yes, sir.

Mr. Morris: Thank you, sir.

You may have the witness.

Re-Direct Examination by Mr. Gold.

Q. Mr. Fenton, in the cross-examination I believe you were asked about various mechanical elements. I have a spring here in my hand, I believe you said that was a mechanical element? A. Yes.

Q. As I hold it here, what is the utility of that spring? A. No utility except to give you weight perhaps to lift.

Q. But the spring itself as I hold it has no utility? A. No utility.

Q. What about the T-bolt that I have in my hand? That is a mechanical element, is it not? [368] A. Yes.

Q. Does it have any utility as I hold it? A. No, not as you are holding it there.

Q. I now have some pieces, pieces of iron, part of a shank, coil, nut, washer. What is the utility of those as I hold them? A. Just a collection of junk iron.

Q. They are all mechanical elements, are they not? A. Yes. They are old mechanical elements.

Q. Would you say the same thing about this clamp member that is a fixed member of the 811 patent? What is its utility as I hold it? A. Applied weight.

Q. Now I am showing you the Defendants' Exhibit 27-A. That is the Deere 100 series clamp, is it not? A. Yes, sir.

Q. As I hold it, what is its utility? A. In that position it has no utility except perhaps to show to the Court in this case.

Q. It has a series of mechanical elements though, doesn't it? A. It has, yes, sir.

Q. Now we go a little further. I have one here, Plaintiffs' Exhibit I, that is the 650 series Deere clamp. It has a shank and a chisel on it, does it not? [369] A. Yes, sir.

Q. Does this have any utility as I hold it here? A. Not as an operating machine, no.

Q. I couldn't very well plow with it? A. Not in this court, no, sir.

Q. As I was holding it there could I plow any place with it? A. No, sir.

Q. So when would one of those clamps become utilitarian, to plow? A. When it is mounted on the plow frame and equipped with power to pull it in a field.

Q. It would take some particular environment then to have utilitarian purposes? A. Sure.

Q. Now, let's refer to Claim 1 of the Graham patent and I read the first part of it. "In a plow having a frame and a ground working tool provided with a shank adapted to rock relatively to the frame when the plow is in operation in a forward direction."

Does that give you any idea as to the purpose of this equipment? A. Yes, that is a general statement regarding the purpose of it.

Q. Would it make any difference then whether I have a [370] pile of loose mechanical elements or whether I have some kind of assembly in a particular environment as to utilitarian purposes of the structure? A. Well, you

must have these elements fitting into a workable unit, of course.

Q. In your opinion is the frame and the shank a part of the workable unit? A. Yes, I think so.

Q. Now, you were asked about the objects in operation of the Graham 798 device and you were also asked if the patent mentioned pumping action. Have you read the patent since you were asked that question? A. Yes.

Q. Do you have a copy of the patent? A. Yes, sir.

Q. Will you turn to copy of the patent, Plaintiffs' Exhibit A, fourth column.

That is on page 2, Your Honor, of the specification.

Tell us whether you find anything in the specification about pumping action? A. Yes, there is a paragraph there.

Q. Will you read it, please. First tell us where you find it.

The Court: On page 2?

[371] A. Last paragraph, beginning with line 67.

Mr. Gold: It is the last paragraph on column 4, Your Honor.

A. "During operation of the plow, there is also a vibratory or pumping movement of the ground working tool that acts to reduce the draft and facilitate operation of the ground working tool in plowing up and heaving the soil to form the ridges and furrows. The pumping action of the ground working tools work the fine soil downwardly to form the seed bed and the larger clods, straw and other mulching materials are worked into the surface for covering the fine soil and serving as a mulch to preserve the moisture."

I might add it is also mentioned in the original third paragraph stating the purpose when it says, "when the plow is working in rocky and/or heavy soil." It broadens this a little there in that respect.

Q. (By Mr. Gold) Then can you tell us now whether or not pumping action is mentioned in the Graham 798 patent? A. Yes, it is mentioned.

Q. I think there were also some questions about what was known by the normal positioning language in the

claims. Go to the top of column 4. Well, in order to have proper continuity let's go to column 3, starting with [372] line 63, and read that paragraph. A. "This is effected by a resilient connection as now described."

Q. I am sorry, I said line 63, column 3. A. "The plow shank and movable part 12 of the mounting are resiliently retained in normal position with the upper face 59 of the plate portion 51 in clamping engagement with the underface 60 of the fixed part 11. This is effected by a resilient connection as now to be described. The end portion 8 of the shank and plate portion 51 of the movable part have elongated openings 61 and 62 that register with the slat-like opening 20 of the fixed part, as shown in Fig. 2. Extending through the registering openings 60, 61 and 20 is a rod 63 having a transverse head 64 on its lower end and engaging under the end portion 8 of the plow shank. Sleeved over the rod and having one end engaging the spring seat 22 is a coil spring 65 having its upper end connected with the upper end of the rod by washer-like spring seat 66 retained on the upper end of the rod by a nut 67, the nut being tightened on the rod to compress the spring 65 sufficiently to retain the shank 2 and movable part 12 in normal position but to allow rocking movement of the movable part when the shank is rocked. This rocking movement of the shank [373] will cause the movable part 12 to pivot away from the fixed part 11 along with the forward end portion 8 of the shank 2 to effect compression of the spring 65 so that the stored up action in the spring will return the shank and movable part of the clamp to normal position with the plate portion 51 resiliently clamped against the fixed part 11 of the mounting as shown in Fig. 2."

Q. Does that tell us anything relative to what is meant by normal position in the claims? A. Yes, that seems quite definite. That has been gone over several times already here.

Q. I think you were already asked about the word stop. Does that paragraph suggest anything about stops? A. Yes.

Q. In what way? A. That the coil spring retains the movable part 12 in normal position so that the stored up

action of the spring will return the shank and the movable part of the clamp to its normal position.

Q. Now, when we think about the assembly that we have here, does the shank and the clamp have any cooperative relationship in operation? A. The shank and the clamp?

Q. Yes, sir. [374] A. Certainly they have cooperative relation.

Q. Would the action of one part have any effect on the action of another part? A. Surely.

Q. Would resiliency of the shank or the extent of resiliency of the shank have anything to do with the operation? A. Certainly will have an effect on the operation of the unit as a whole.

Q. Would it have any effect as to stressing of the parts? A. Yes, certainly.

Q. If we took the shank by itself, though, separately from the elements, would it have any effect then? Just took the shank by itself and held it up here, would it have any effect then on the rest of the parts of the clamp? A. Certainly not. If it is removed from the clamp, it will have no effect on that clamp.

Q. Would you say the association then of the parts is important? A. All-important. It is my opinion it is rather pointless to point out a lot of mechanical parts that are old elements in themselves, independent of their assembled relationship. It is meaningless.

Q. I believe in your testimony on cross-examination there [375] were some questions relative to the old 811 structure, and there was a plate member that I believe you said had been called a fulcrum plate, and you said it could be called a shank attaching member, is that right? A. I believe we called it that interchangeably more or less.

Q. You and Mr. Morris were agreed it could have that terminology? A. Not strictly a shank attaching member, but we called it that.

Q. This plate member has a groove that lays over a pin, doesn't it, to form a pivoting arrangement? A. That is right.

Q. Is that plate connected to the fixed member by that pivotal member? A. It is in engagement with the pivot pin and in a sense is connected, not rigidly, not completely connected.

Q. Does the pin pivotally connect the plate to the fixed member? A. Does the plate pivot—

Q. Does the pin— A. Yes, the pin operates to connect it.

Q. It has a sliding or a rotative motion on the pin, is that right? A. Yes, when it pivots.

[376] Q. I can easily remove it. No bolt or anything fastening it? A. No. I think it might be fair to say that when the shank is inserted that you can't remove it as you did there so easily, so essentially it is retained there on that pin.

Q. Now, I have placed the portion of the shank in the clamp. Where is that shank relative to that plate member? A. The shank is above the plate member.

Q. Now then, I can move that shank back and forth, can't I? A. Yes, sir.

Q. I can swing the plate member down a little bit and move the shank up and down on it, can I not? I can move the shank up and down (demonstrating)? A. Yes.

Q. Is there anything holding that shank in constant contact with the plate member? A. No, except the upper pressure of the spring. As you moved it there it is not held in contact.

Q. In the 811 patent was there anything about longitudinal movement of the shank? A. Yes, quite a little.

Q. What longitudinal movement is mentioned in the 811 [377] patent? A. The longitudinal movement of the shank, did you say?

Q. No, I asked you what longitudinal movement is mentioned relative to the 811 patent. A. I think it is mentioned several times in the patent, often, and it is the movement, longitudinal movement due to looseness of the connecting parts.

Q. Now, the plate member pivots about what axis in the operation of this 811 device? A. Pivots around the pin.

Q. The axis of this pin? A. Yes, and through those areas.

Q. Now I have it in operation wherein this would open up from hitting a rock and I start moving it back to its upper position, what axis would the shank be pivoting about? A. Well, it pivots around the lower face of the fixed member, the curved face.

Q. On the upward movement of the shank and plate? A. Yes. There is a double pivot in this shank, as has often been described.

Q. When it is plowing and there is a force up on the shank, where is the pivotal axis of the shank? A. In normal plowing?

Q. Yes, sir. [378] A. Then the shank would be held down against the plate and whatever pivot occurs would be in the pivot pin, unless there was extreme pumping action.

Q. What about the upper and rearward force on the shank in this plowing operation? A. If it does any pumping, then the shank will raise up to its other pivot point.

Q. And where is that other pivot? A. As we just said, under the curved member of the fixed part, the underside of the curbed member.

Q. You say the shank then pivots about two pivot points? A. Of the shank. The clamp has two pivot points, one for the fulcrum plate and one for the shank.

Q. I believe you were asked a number of specific questions relative to the operation of the 811 clamp. Can you tell us the differences in the operation of the 811 clamp and the 798 clamp, as shown here on the charts? A. You want the general operation or the specific operation?

Q. The differences in the operations. A. Well, overall, if you watch it, it appears to operate in a similar manner. But actually there is more movement between the shank and the hinge member, there is a chance for more longitudinal movement between those two, and there is a different pivot point for the shank, and walking behind this plow in operation [379] you are struck with the general tendency for the shank to move laterally in the operation; tendency to move laterally in the operation.

Q. Would it be possible for the shank in the 811 patent to pivot without longitudinal movement? A. In the attaching parts?

Q. Yes. A. No, because of the two separate pivots I think the longitudinal movement is essential in that, some longitudinal movement.

Q. Can you tell us the reason or can you point out the reason on this model? A. Well, this plate, that you call the fulcrum plate or shank attaching member, pivots around this pin, and of course that gives it a radius of movement. Now, the shank pivots around the point higher above, farther above, and a different radius, so there must be sliding action between them as they pivot.

Q. What keeps that shank from being pulled out of this clamp? A. The spring pin.

Q. That is all? A. Yes, that is all.

Q. What kind of hole was in the shank? A. It is an elongated hole, which gives possibility for [380] the shank to move laterally.

Q. Now, I believe that you were asked about the clamps and the results obtained in the ground working, and whether or not the different structures would achieve the same result, and you said something about generally speaking they did. What did you mean by "generally speaking"? A. I observed these different clamps in operation and as far as I can tell from observation they operate in an identical manner, if the springs are adjusted at the same tension, they move in almost an identical manner, generally speaking.

Q. Now, when you say they move in almost an identical manner, what about the operation of them, actual operation of the parts? A. Well, there is some difference, of course, in stresses and other things.

Q. Then your answer is not directed to the actual operation?

Mr. Morris: Your Honor, I believe this is his own witness and I object to the leading of the witness in an attempt to explain his answers.

The Court: Sustained.

Q. (By Mr. Gold) Now, in referring to Claim 1, if you look at the chart, Defendants' Exhibit M— A. In the 100 series?

[381] Q. Yes, 100. Referring to the fixed member, the part that you colored yellow, and the box part of it, and particularly the longitudinally extending underface of the fixed member, can you tell us anything about what is said relative to the extent, extent of the surface? A. In the claim language?

Q. Yes, sir. A. No, there is nothing said about the extent of the underface in this particular element.

Q. What about the upper face of the elongated plate portion of the shank attaching member? Is the extent given on that? A. That is in Element 2?

Q. Yes, sir. A. No, there is no mention of the length of the face.

Q. Is it your understanding that each element of the claim must differ from similar elements of some prior art structure?

Mr. Morris: Object to that, Your Honor, as a pure question of law.

The Court: I think so. Objection sustained.

Q. (By Mr. Gold) With reference to Element 3 of Claim 1, what is the function of the element that is specified in Claim 1? A. The function of this element is to connect "the [382] elongated plate portion with the shank for maintaining the upper face of the shank in constant continuous contact with the underface of said plate portion of the shank attaching member."

Q. I believe on the charts, Plaintiffs' Exhibit M, it shows the bolt in gray. What about the function of that bolt, relative to the wording of Element 3 of the claim? A. That is the attaching member that maintains the upper face in contact, the upper face of the shank with the shank attaching member.

Q. What about constant continuous contact? A. If nut is tight it would be constant and continuous.

Q. Well, now I have placed the chart, Plaintiffs' Exhibit L, on the easel. What about the bolt in the Deere 650

clamp and its function? A. It performs a similar function.

Q. What about constant continuous contact? A. I would say the two are very similar in their action, as far as that is concerned.

Q. And the Graham 798 structure keeps the shank from being pulled out of the clamp? A. There are two things that would keep the shank from being pulled out, this gray bolt and also the spring bolt.

[383] Q. When would the spring bolt have any function like that? A. It would only be in case the gray bolt ceased to function or became too loose or worn or something like that. However, there is more clearance in the hole through which the spring bolt places.

Q. And the Deere 650 series, what keeps the shank from being pulled out of the shank? A. This bolt in gray.

Q. Now, you were telling us something about a function for the loop on the hinge member of the Graham 798 patent. What is the function of that loop? A. It supports the shank when the plow is out of the ground, and also prevents some lateral movement of the shank in plowing, and it performs valuable service on the rebound after the shank passes an obstruction. I believe those are the three main objects or uses of that device.

Q. Is that loop essential in normal plowing operations? A. I stated that the plow would work in light work in the absence of rocks, and so forth, might work for quite a while, but I considered for a unit, as it is intended to be used, this is essential.

Q. Now, as far as the rebound of the shank that you mentioned as one of the functions of that loop, did you [384] find anything in the Deere 650 series in regard to rebound of the shank? A. Yes. The shank is supported by a portion of the fixed member which extends across below the shank. I testified this morning that it performs a similar function, as far as the rebound is concerned.

Q. What is your opinion regarding the mechanical equivalency of the loop on the Graham 798 and the bar portion in the Deere 650 series clamp? A. I believe that they are mechanically equivalent in the work that they do.

Q. I believe you stated a little bit ago that the gray bolt would function to maintain the continuous contact with the underface of the shank member with the underface of the hinge member. How much contact is required in that Element 3 of Claim 1? A. It doesn't state the length, but it says the upper face of the shank, and since the shank curves soon after leaving it, certainly it doesn't include the whole shank, so I would assume that any length of contact, constant and continuous contact, would satisfy the element of this claim.

Q. A sixteenth of an inch? A. Oh, well, any reasonable length. Three or four inches.

Q. You were asked a question about the Cockshutt clamp, [385] Defendants' Exhibit 1, and I believe the question was, did the pin pivotally connect this plate member to the fixed member. Now, would you examine it and see if that pin pivotally connects the plate member to the hinge member? A. Not in the same sense that it does in the 798, but in a sense it is similar to the 811. The plate bears against the pin on sort of a shoulder. It is even less permanently connected than in the 811 patent, because it simply has one bearing against the shoulder.

Q. Then the plate is actually loose, is that it, that part of the fixed member? A. Well, attached to the pin.

Q. Do you know how the shank is held in the Cockshutt device to keep it from being pulled out of the clamp? A. May I look closer?

Q. Yes. A. There is a nub, I believe we rely on these nubs—I didn't work on this case, but I believe we have a nub, a depression in one member and another fitting down into that depression in the other.

Q. With the shank underneath this plate member, then can you point out the nub that you are talking about? A. It shows here (indicating).

Q. The shank isn't in this clamp? [386] A. No.

Mr. Morris: Mr. Gold, would you like to have a Cockshutt drawing to use in connection with that?

Mr. Gold: Well, I don't think so.

Mr. Morris: I have them here.

Mr. Gold: I think from what he said it is clear as to the connection.

Q. (By Mr. Gold) Would a nub connection be like a screw? A. Like a bolt, you mean?

Q. Or like a bolt, yes, sir? A. Yes, less rigid than a bolt.

Q. Would a nub arrangement hold two parts together like a bolt would, as the gray bolt in either the 798 patent or the Deere 650 series device? A. It has some longitudinal motion, it can be fitted tight so there is little play between the two members.

Q. I believe you were asked about Element 6 of the Claim 1 in connection with the 650 series, and I think you were asked about the mechanical element as specified in that element. What is the mechanical element that you find in the Deere 650 series that responds to the Element 6? A. "means having connection with the forward end of the shank and with the other end of the coil spring whereby the spring yieldably maintains said normal contact of [387] the upper face."

Now I think I stated that literally this element isn't present, but the shank is bolted to the pivoted member and the spring is attached—is it 650 you are asking about?

Q. Yes, sir. A. The spring is attached through the spring bolt to the bottom.

The Court: The spring is attached to the pivot member in 650?

Mr. Gold: No, sir.

A. No. No, I thought we were talking about—

Mr. Gold: The 650 series, sir, is attached to the clip.

A. Actually the attachment is similar between the 798—

The Court: The spring is attached to the shank?

A. Yes, below the shank.

The Court: In the 650, and 100 is attached to the hinge member?

Mr. Gold: That is correct.

Q. (By Mr. Gold) Now, I understood you to say the literal element is not present? A. It is the latter part of

this element which says that it maintains the plate portion of the shank attaching [388] member with the underface of the fixed member to maintain the normal plowing depth. That element is there literally, if you accept our small nub as an underface.

Q. If you accept your interpretation of Element 1, you mean? A. Yes.

Q. What would be your opinion about the mechanical equivalency of Element 6 being present in the Deere 650 series? A. Well, if they are there literally of course they are mechanically equivalent.

Mr. Gold: That is all.

Re-Cross-Examination by Mr. Morris.

Q. Mr. Fenton, I believe that most of what has been covered here on re-direct we have covered in full on my cross. However, I believe one or two somewhat different subject matters have been raised I would like to discuss with you just a moment.

You have been asked here if the individual elements disassociated from their place in the structure have any meaning, and of course you have stated just old elements without their proper associations mean nothing as far as this controversy is concerned. You [389] also have stated, I believe, that their association is where they achieve some significance as structural elements, is that true? A. Right.

Q. And it would likewise follow, would it not, that their association as defined in the structural elements of the claims would be of significance in determining the importance and position of the association and the function which they perform in that association, would it not? A. Certainly.

Q. And it would determine how they cooperate with each other in that particular association, would it not? A. It should, yes, sir.

Q. So that when we are searching for the particular association that has significance insofar as this structure is concerned we are looking at the association as it is set out in the elements of the claim, are we not? A. And also in the mechanical structure.

Q. Of course we are not construing—we don't arrive at interpretations or make-up of elements by looking at mechanical structures, we must look at the word that we are trying to apply, mustn't we? A. I suppose. Well, we look at both of them.

Q. You determine whether the particular association [390] described is applicable to a structure, yes, but to determine the association as defined we must look at the claims, mustn't we? A. Yes, sir.

Q. One other point I believe has been raised here, in asking about the 798 structure, as to whether or not there is anything besides the forward fastening bolt which prevents the shank from being pulled out of the structure, and you stated yes, if the fastening bolt became loosened or fell out or something, then the spring rod itself could perform in that fashion because it passes through the shank and through the hinge member and in that way would keep the shank from pulling all the way out? A. That is right.

Q. In studying this patent, Mr. Fenton, the specifications of the patent and the drawings and the claim, do you think that any such function for this spring member was fairly intended? A. No, I don't think so.

Q. It obviously was not. That was one of the precise problems which was trying to be solved, to get away from, the pulling load being borne by the spring rod, wasn't it? A. Well, possibly, but a convenient location for it I [391] think was the main reason for it being placed there.

Q. Yes, I know it may be convenient, but wasn't that one of the very defects that we talked about here in 811, that is, the pulling load is borne by the spring rod? A. Well, that was a defect, yes.

Q. And furthermore, in 811 you had two supporting surfaces, a top surface for the pin, the fixed member, and a lower surface or support, the hinge member, to support that pin as the shank pulled back against it, didn't you? Is that true? A. That is true.

Q. Now, since the plate in 798 has been shifted to a position above the shank, then the lower support for the rod is gone, isn't it, and if the bolts were taken out, then the entire pulling load of that shank would be down on

the bottom end of the pin and without anything to support it, wouldn't it? A. You would still have the sheering strength of the pin.

Q. But wouldn't you be bending it around a single point? It would be stuck up here in the fixed member, the pulling load back on the bottom end of it? A. Yes.

Q. And it would inevitably bend it and make the device inoperative, wouldn't it? A. Well, very likely, yes. [392] Q. So that certainly was no intended function of the spring rod in the 798 structure, was it? A. No.

Q. And you find no mention of any such function in the specification or claims or the file history, do you? A. No.

Mr. Morris: Thank you. That is all.

(Witness excused.)

Mr. Fishburn: Your Honor, we have no more witnesses on our prima facie case. I would, however, like to introduce our exhibits.

First, Plaintiffs' Exhibit A is a copy of the patent in suit.

B and B-1 through B-10 are the minutes of the meetings of the Board of Directors of the plaintiff, Graham Plow, Inc.

C is the Jeoffroy HT-5 spring clamp.

D is the Jeoffroy HT-5-A.

Then we have Plaintiffs' D-1, which is a hinge member of the Jeoffroy HT-5-A.

E is Jeoffroy clamp HT-6-AD. Then we have E-1, which is the hinge portion of HT-6-AD.

Mr. Morris: May I point out, Mr. Fishburn, that if the Court gets to examining these physical matters at a later time, that the particular hinge [393] member which is identified as Plaintiffs' Exhibit E-1 is somewhat longer than the hinge member in Exhibit E, this particular one being for a square tubular beam type plow, and the result is that the hinge member is approximately an inch longer, and it will not precisely interchange with that in the clamp itself. Otherwise there is no difference.

Mr. Fishburn: As Plaintiffs' Exhibit F, the drawing of the 798 patent device, made by Rose Proctor, which is referred to in the stipulation. That was March 19, 1950.

* * *

Mr. Fishburn: And as Exhibit G, the drawing of May 16, 1951, of the 798 device made by Rose Proctor.

The Court: Pardon me just a minute, Mr. Fishburn. In this stipulation do you stipulate and agree upon the introduction of the different Plaintiffs' exhibits that you have enumerated, and have enumerated in this stipulation?

Mr. Fishburn: No, we don't stipulate that they may be introduced without objection. We just [394] identify them. We stipulate that they are these devices and drawings and papers.

Mr. Morris: Your Honor, I have no objection to the admissibility of those documents which have been attached. The only objection I have is to Plaintiffs' Exhibit G.

The Court: What is Plaintiffs' Exhibit G?

Mr. Fishburn: G is the drawing which is attached to that stipulation. It is next-to-the-last paper on the stipulation.

The Court: Yes, I see.

Mr. Fishburn: Then H is the paper following it, which is also a drawing made by Rose Proctor, May 19, 1951.

The Court: The other drawing was March 19, 1950?

Mr. Fishburn: The first one, which was F, was March 19, 1950. G is May 16, 1951.

The Court: Those dates don't appear on the exhibits, do they?

Mr. Fishburn: No, they do not. They are in the stipulation.

Mr. Morris: Your Honor, on those photocopies there, the dates are unreadable, but I have no hesitation in stipulating, as we have set out there, [395] that if that witness were called she would testify to those dates. But of course I don't agree to the truth of her testimony, or stipulate as to the truth of it.

Mr. Fishburn: Then you have up through H, Your Honor?

The Court: Yes. What is the date on the drawing H?

Mr. Fishburn: May 19, 1951.

The Court: G and H are the same date?

Mr. Fishburn: No, there is three days difference.

Mr. Morris: G is May 16th.

Mr. Fishburn: The 16th and 19th.

The Court: But these are all drawings of 798 patent?

Mr. Morris: Yes.

The Court: All right.

Mr. Fishburn: Plaintiffs' Exhibit I is the spring clamp of the John Deere 650 series, and Plaintiffs' Exhibit J is the John Deere 100 series.

As the Plaintiffs' Exhibit K, the pamphlet of the Deere 900 series. It was identified as Exhibit A in some interrogatories.

The Court: Defendants' pamphlet, do I [396] understand?

Mr. Fishburn: That is right.

As Plaintiffs' Exhibit L, a colored chart of the 798 patent Claim 1 applied to the 650 series.

Plaintiffs' Exhibit M, colored chart of the 798 patent Claim 1, applied to 100 series.

Plaintiffs' Exhibit N, colored chart of patent Claim 2, applied to the 100 series.

In addition to those exhibits, I want to introduce as part of the plaintiffs' prima facie case what have been referred to here and marked as Defendants' Exhibit 32, which is correspondence produced during the taking of depositions of the employees at Moline, Illinois, of Deere & Company.

Defendants' Exhibit 33-A, drawing XCA-318-N. 33-B, a drawing—I don't have any other identification of that right at the moment, but I think it was one that went along with 33-A, one of the first drawings of the 650 series.

And Defendants' Exhibit 34-A, drawing attached to letter of October 23, 1953, which is part of the correspondence with Exhibit 32.

And Defendants' Exhibit 34-B, which is also a drawing attached to that same letter.

Defendants' Exhibit 38—38 was the drawing [397] XCL-134-N.

Defendants' Exhibit 39, drawing XCL-135-N.

Defendants' Exhibit 41, drawing which was attached to a letter in correspondence, letter being dated December 8, 1953.

Defendants' Exhibit 42-A—

The Court: Is that attached to the letter of November 8th?

Mr. Fishburn: December 8, 1953.

Mr. Morris: That drawing has the number XCL-136, Your Honor.

Mr. Fishburn: Defendants' Exhibit 42-A is a drawing attached to a letter of January 4, 1954, in the correspondence of Exhibit 32.

Defendants' Exhibit 42-B, drawing of the pivoted part of the clamp. 42-C is a drawing of the casting which the spring sets on. 42-D is a drawing of the washer or cap at the upper end of the spring. 42-E is a drawing of the coil spring. 42-F, drawing of the U-bolt, sometimes referred to as the spring bolt. 42-G is the drawing of the shank or standard. 42-H is a drawing of the retainer clip.

Defendants' Exhibit 44, copy of the Hunter patent, which is issued on the 650 series.

Defendants' Exhibit 45-A, drawing of the [398] fixed member, and was referred to in the letter of April, 1958. I didn't get the particular date, but I think that is the 100 series, is it not, Mr. Morris?

Mr. Morris: That is right, initial drawing.

Mr. Fishburn: 45-B is a drawing of the pivoted member.

I might state, Your Honor, we will give you a complete list of these exhibits at the end of the trial so that you will have a complete identification of them.

The Court: Very well.

Mr. Fishburn: Now I will kind of backtrack a little here. Defendants' Exhibit 27-A, clamp, Deere 100 series.

Defendants' Exhibit 30 is a survey made by Deere & Company and dated March 30, 1953.

Defendants' Exhibit 31 is a survey of Deere & Company dated April 17, 1953.

Defendants' Exhibit 46, drawing final production model of the 100 series.

Defendants' Exhibit 49, sweep for attachment to the shanks of the plow, which is one of the Graham sweeps that was marked here.

I think that is all. We offer those, Your Honor.

[399] Mr. Morris: We have no objection to the admissibility of those exhibits.

The Court: They will be admitted.

(The following exhibits, so offered by plaintiffs, were received in evidence: Plaintiffs' A; B; B-1 through B-10; C; D; D-1; E; F; G; H; I; J; K; L; M; N; Defendants' Exhibits 27-A; 30; 31; 32; 33-A, 33-B; 34-A, 34-B; 38; 39; 41; 42-A, 42-B, 42-C, 42-D, 42-E, 42-F, 42-G; 44; 45-A, 45-B, 46 and 49.)

Mr. Fishburn: Plaintiffs rest, Your Honor.

---

[400] DEFENDANTS' CASE

WILLIAM T. GRAHAM, called as a witness on behalf of the defendants, was duly sworn and testified as follows:

Direct Examination by Mr. Morris.

Q. You are William T. Graham? A. Yes.

Q. You reside in Amarillo, Texas? A. Yes.

Q. You are the patentee of the patent 798 which is here in suit? A. Yes.

Q. It was issued to you? A. Yes.

Q. You also have some official capacity with the plaintiff, Graham Plow Company? A. Yes.

Q. You are president of that company? A. Yes.

Q. Mr. Graham, you first got into this plow manufacturing business approximately 1939, when you bought out Mr. Fred Hoeme, over at Hooker, Oklahoma, did you not? A. Yes, sir.

Q. And at that time Mr. Hoeme was manufacturing a plow [401] generally of the chisel type, as we have described here, was he not? A. Yes.

Q. And he had at least one patent upon the general chisel type plow which was being manufactured at that time? A. Yes.

Q. And when you purchased it you moved the company to Amarillo, Texas, and operated as an individual for some period of time, did you not? A. That is right.

Q. And then subsequently organized corporations, the first corporation being shown as Graham-Hoeme Plow Company, was it not? A. Yes.

Q. And there has been some evolution of those corporations and it is now called Graham Plow, Inc., is it not? A. Graham Plow, Inc., yes.

Q. The corporation is organized in Texas and its home office and principal place of business is Amarillo, Texas, is it not? A. Yes.

Q. Mr. Graham, before you moved up into the rock country and started selling plows in the rock country, the glacial areas to the north and northwest in the United States, you had no particular trouble with the plow [402] insofar as the operation of the shank and the clamps to attach the shanks to the beam of the plows, and so on, is that correct? A. That is right.

Q. During that period of time your plow had what we call or what we have called here the rigid type or fixed type clamps which attached to the forward end of the shank, to the crossbeam, transverse beam of the plow frame? A. That is right.

Q. With a shank of that sort rigidly attached to the plow frame in that manner, there was a resilient or trembling or vibrating action of the shank itself as it traveled through the ground, was there not? A. That is right.

Q. And with a curved spring steel shank of the sort here it has a certain amount of resiliency by its very con-

struction and it permits the plow tool to vibrate or pump or tremble? A. Vibrate slightly.

Q. As it goes through the ground. All right. There is of course in that type of shank a certain amount of stretch or resilience which will permit it to clear obstructions that are not too great, such as a hard spot in the ground or a small rock, it can stretch out [403] somewhat and pass over that type of obstruction, can it not? A. I wouldn't say it would stretch out.

Q. Well, will it flex back here in the curved portion of the shank, will it flex some? A. Yes, it would pull backward.

Q. It would pull backward so that the plow point, chisel point or sweep, whatever it happened to be, could to some extent clear obstructions? A. If it pulled back too much it would take a set.

Q. If it stretched beyond the resilient limit it might take a set? A. And as it fatigued it would take a set anyhow.

Q. Now as those plows went into the north country and you got into the glacial rock country, you immediately had breaking trouble, did you not? A. That is right.

Q. You bent the flanges of the frames, broke some shanks themselves, bent and broke chisels? A. That is right.

Q. And to respond to that rock problem, your spring clamp structure which has been called 811 here was devised, was it not? A. That is right.

Q. And you filed an application and obtained the 811 [404] patent on that initial structure? A. Yes.

Q. You devised that clamp sometime in 1946 and the patent issued in 1950? A. I don't remember the dates.

Q. Well, it was along about 1946 that you made your first of those, wasn't it? A. I believe that is right, Tom.

Q. It was after the end of World War II, wasn't it?

Mr. Fishburn: For the record, it was February 26, 1947.

Mr. Morris: I wasn't asking about the application, I was asking for the time he made the first one.

Q. (By Mr. Morris) You made the first one sometime in 1946 you think? A. Tom, I don't have those dates in my mind.

Q. Well, '46 or '47 is close enough to suit me. It was one of those years, wasn't it? A. I just don't remember.

Q. You don't remember? A. No.

Q. All right. You manufactured that clamp and employed it on the plow implements, machines that went to the rock country from then on, didn't you, for some period of [405] time? A. Yes, we have manufactured a spring clamp ever since.

Q. Well, you manufactured the 811 type clamp and sold it for some number of years, did you not? A. Yes, and then we changed it some. We got other patents and changed them.

Q. Is it true or not that you did manufacture and sell, or one of your corporations did, the 811 type clamp for some number of years? A. Yes.

Q. Now, you have heard the description given here by Mr. Fenton as to the operation of that 811 clamp, have you not? A. Yes.

Q. You have been sitting here in the courtroom? A. Yes.

Q. And would you agree with that description as to the operation of the clamp as reasonably accurate? A. Yes.

Q. Now, in that clamp you had some rather severe wear points, did you not? A. We had some wear. I think it was exaggerated. I think you exaggerated it quite a bit.

Q. Well, we will find out about that as we go along. What I would like to know right now is if you didn't have [406] some wear points? A. Yes, we had slight wear.

Q. Where did you have some wear in the clamp, Mr. Graham? A. When the shank would pull back against the spring bolt it had a tendency to cause wear.

Q. Where did it cause wear? A. On the spring bolt and the hole the spring bolt goes through and the clamp.

Q. Caused wear on the bolt itself and it caused wear on the fixed part of the clamp where the bolt bore back against the clamp and had a sliding action, is that true? A. Yes, we had some wear there. But it was a very successful clamp.

Q. I am not asking you about successful, I am asking you about wear. That is true, isn't it? A. A little wear.

Q. Where else did you have some wear? A. Tom, that is the only place that I think that I remember having any wear, to speak of.

Q. Do you remember any wear on the rear portion of the clamp where the shank pivoted on it? A. Slight wear there, yes.

Q. Did you have any impeding of the spring action because of the binding effect on the spring rods, so that the [407] spring didn't travel up and down as easily as it was supposed to? A. No, I think the action, that was maybe more free for that construction.

Q. Well, you didn't have any binding of the spring rod? A. No.

Q. In your 811 structure? A. No. Well, there might have been a slight drag but I wouldn't call it binding.

Q. You don't think that the pressure back on that spring rod caused the device not to open and close as freely as you wanted it to? A. No.

Q. Is that all of the wear points or binding effects or operation that you had in the 811 type structure that you can think of? A. Oh, it is possible any place it moved to have a slight wear.

Q. You can't think of any others particularly though? A. Not that I would call trouble.

Q. When did you come to the design of 798? A. I don't remember the dates. It was sometime later.

Q. You are the man that did it? A. Yes.

Q. You can't remember when? [408] A. I don't remember the dates.

Q. Can you give us even an approximation? A. I don't have it in my mind.

Q. You don't have any memory about that at all? A. No. I don't try to remember dates.

Q. Do you have anything from which you can refresh your recollection as to when you first came to design 798? A. I don't know if we have it here.

Q. Do you want to inquire? A. Yes, I can inquire.

Q. I would like to have an answer.

Mr. Fishburn: If Your Honor please, it is stipulated in this stipulation that these drawings were made, one of them was March, 1950.

Mr. Morris: Now, excuse me, I don't mean to interrupt you, Mr. Fishburn. It is not so stipulated. The stipulation is that if Rose Proctor were called as a witness that is what she would testify to.

Mr. Fishburn: All right, I will accept that correction. That is all the information that we have here with us. We know that Rose Proctor would testify she made it on that date—

Mr. Morris: I object to the argument about what you may know.

Mr. Fishburn: You asked if we had any dates. [409] I am giving you what we have.

Mr. Morris: I asked Mr. Graham.

Mr. Fishburn: You asked him if he had anything here he could get. I am telling you what we have. Now if you want it, all right. If you don't, I will sit down.

Mr Morris: Well, I asked Mr. Graham if he had anything he wanted to refer to, and if you want to inquire as to what he wants to refer to, fine. All I am seeking is what this witness can testify as to the date that he first started to design this clamp.

The Court: That is certainly a proper question.

Mr. Fishburn: I agree, Your Honor. I was trying to help him. If he doesn't want it, let him go ahead with the witness.

Q. (By Mr. Morris) Well, I take it then, Mr. Graham, that you have nothing here that you can refer to that will help you recall? A. I don't have the dates and I don't know if it is in the courthouse or not. I will try to get it for you.

Q. All right. Will you do that at the first recess, please, sir. Then we will come back to that matter.

Can you associate it in relation to the time of the first Jeoffroy trial? [410] A. No, I don't try to remember dates. I don't have it in my mind.

Q. Can you even tell this Court whether you designed the clamp before the first Jeoffroy trial or after the first Jeoffroy trial? A. I am blank on it.

Q. You just don't know? A. No.

Q. You can't tell the Court whether information picked up during the course of the first Jeoffroy trial assisted you in designing the clamp? You can't tell the Court that? A. No. I don't try to remember those things.

Q. Can you tell the Court what the source of any of your design was that you put into the 798 clamp? A. Repeat the question, please.

Q. Can you tell the Court what the source of any of your design was that went into the 798 clamp? A. What do you mean by the source?

Q. Where did you get it? A. You mean the thought?

Q. Yes, where did the thought come from? A. In my work and thought on our problems and trying to make a better clamp.

Q. What problems were you working with? [411] A. The problem of a load—I thought it would make a better clamp to take the load off of the spring bolt, and to take the wear off of the upper structure above the shank and make it just a little more solid and not have quite so much looseness, and put the load on the fulcrum plate above and the pin at the back.

Q. What was the purpose of pulling load off the spring rod? A. It saved some wear.

Q. To save wear? Is that all? A. And the device that we made would maybe do many things, in connection with all the devices—the changes.

Q. Right now we are talking about one thing in particular, taking the load off the spring rod. You said it reduced some wear? A. Yes.

Q. What else did it change? A. By bolting the shank to the plate we took some load off the spring, we made a little tighter connection. I don't know that I could explain all the things that it did.

Q. Can you go back and see if you can answer my question and explain that one thing first before we pass to some others? My question is what were you trying to do in

taking the load off the spring rod besides reduce wear? [412] A. That is all I can think of right now, Tom.

Q. Have anything to do with freeing up the pivot, make it pivot easier? A. It might free it up a little.

Q. You know, as a matter of fact, don't you, Mr. Graham, that you had spring rods in your 811 structure that bent and they would bend so much sometimes that the device couldn't even close itself? A. Tom, I have never in my experience—I saw some you brought in, but I have never in all the sales I have made had any complaint to speak of. I have never seen what you talked about yesterday in all the plows we have sold.

Q. You have seen your spring rods in the 811 structure bend so that— A. I can't recall ever seeing a one bent. I don't remember exactly what you had in the courthouse, but you exaggerated it plumb out of the bounds of reason.

Q. Then it is your testimony that you didn't have any bent pins? A. No, I wouldn't say they didn't bend, but I am giving you my testimony that I have never had any complaint or I don't remember seeing any.

Q. You didn't ever have the spring rod then get in such condition that it impeded the pivotal action of the shank? [413] A. I don't remember seeing it or ever hearing of it, only your talk.

Q. What else then, what other changes did you make in 798 over 811?

Mr. Gold: If Your Honor please, I don't believe there is any showing he made any change in the 811 patent to make the 798. They are two different structures, two different patents, and there has been no showing there were changes made in 811.

Mr. Morris: All right, Your Honor, I will come at it in another way.

Q. (By Mr. Morris) What were the problems you were trying to solve in designing 798? A. Tom, I wasn't trying to solve problems so much as I was to build a better clamp.

Q. In what respect were you trying to make the clamp better, beside those we have already mentioned, to elimi-

nate the wear and make a little freer acting rod? A. I was trying to avoid some wear at the front and at the back.

Q. All right. What did you do, what changes did you make over 811 to produce 798 and to answer those problems you were seeking to solve? A. We moved the fulcrum plate from the lower side and put it on top of the shank to carry the load, and moved the [414] fulcrum pin to the top, and we bolted the shank to the fulcrum plate in front of the spring.

Q. Anything else? A. That is the main things I can think about.

Q. Whose idea was it to incorporate the loop or stirrup member into the structure? A. I don't remember.

Q. Do you remember which one of the men in the plant there it was that suggested the use of the loop or stirrup member to hold the shank at the rear? A. All the elements in that thing, as far as I can remember, was my idea.

Q. Oh, they were yours? You don't remember who suggested it, but it was your idea? A. I don't think of anyone suggesting anything.

Q. Well now, if it was your idea, Mr. Graham, I don't suppose you would have any difficulty thinking about who it was that suggested it, would you? A. If I thought of it myself?

Q. Yes. A. I would think of who did suggest it?

Q. Yes, sir. A. I don't get you. If I thought of it, someone else didn't suggest it.

Q. Well, you were searching your memory just a moment ago for [415] who it was that may have suggested to you the idea of putting the loop at the rear of the hinge member to hold the shank, weren't you? A. No, you misunderstand me.

Q. Is that right? A. Yes.

Q. All right. Well, now then, at the time of the first Jeoffroy trial in 1951, what was your attitude toward locating the pivot pin about the hinge member and above the shank rather than below it? A. At what time did you say?

Q. At the time of the first Jeoffroy trial in April, 1951. A. It would be the same then as it was when I invented it, that it would improve it.

Q. It was your idea that it would improve it? A. Yes.

Q. All right. It was your idea that by locating the pivot pin above the shank you could have a freer acting pivotal member and you could transmit the forces into the body of the clamp a little better, is that right? A. Tom, as I stated, I thought it would avoid some wear.

Q. Well now, answer my question, please. In locating the pivot pin above the shank, your attitude toward it at the time of the first Jeoffroy trial in April, 1951, was [416] that it would improve the clamp? A. Right.

Q. And would make a freer acting pivot, is that true?

Mr. Gold: If Your Honor please, what is he talking about? Are you talking about the 811 or the 798?

Mr. Morris: Talking about moving the pivot pin up above from the position where it was before.

A. In which clamp?

Q. In designing this new clamp. A. 798?

Q. Yes, sir. That is what we are talking about, isn't it? A. We moved it up there to prevent wear and make a better clamp, of course.

Q. Better in what respect? A. To avoid some wear at certain points.

Q. You have said that. What else? A. That is about all I can think of right now, Tom.

Q. To make the pivot operate any better? A. In a way it might.

Q. That was your thought about it in April, 1951, at the time of the first Jeoffroy trial? A. Yes, I would say that it is possible that that was my thought then.

Q. Well, that is your thought now, you think that has [417] been your thought all along, don't you? A. Yes, to some extent, Tom.

Q. All right. I would like to refresh your memory, Mr. Graham. I would like to refer you to your testimony in the first Jeoffroy case from the printed record, Volume I

of Case No. 14,227 in the United States Court of Appeals, commencing on page 153, these questions were asked:

"Question: Mr. Graham, does it make any difference whether the pivot on the shank on the spring trip is above or below the shank?

"Answer: The pivot point?

"Question: Yes.

"Answer: Well, it has the pivot point above and below. It pivots above and the fulcrum plate pivots below it."

Then followed a discussion about terminology as to a spring trip as distinguished from a spring clamp. Then on page 155:

"Question: Well, Mr. Graham, to get back to the original question, whether you call it a spring trip or a spring clamp, does it make any difference in that kind of device whether the pivot or the shank is above the shank or below the shank?

"Answer: Well, this shank, the fulcrum plate pivots under it; and the shank pivots around the part of the [418] clamp above it, the beam.

"Question: Now, Mr. Graham, please answer the question. I am not asking you about your particular clamp. I am asking you if any spring clamps of that type, if it makes any difference whether the pivot on the point is above the shank or below the shank.

"Answer: Well, any shank that pivots would have to pivot around something above it, I suppose.

"Question: Well, is it your answer that it makes any difference whether you put the pivot point above or below the shank?

"Answer: You got to have something to hold the shank down, if I understand it right. It pivots around whatever is above it.

"Question: Well, Mr. Graham, you will agree you have to have some kind of a pivot for the shank—if you have a pivoted shank, you have to have a pivot. Now, you could attach that to a pivot member with the pivot above or below the shank—or could you drill the shank and put the shive on the pivot through the shank?"

Then followed a discussion about the problem of altering the shank in some way. Then:

"Question: What would happen if you put the pin below the shank and welded it to it?

"Answer: I think it would break.

[419] "Question: Now, that is because you don't want, you don't like welding something to an alloy spring clamp or spring shank. But if the pivot pin were attached in some other way then by welding so that it didn't weaken the shank, would it make any difference whether the pivot pin was above or below the shank?

"Answer: If it's fastened to the shank?

"Question: Well, whether it is fastened to it or whether the shank simply rests against it, does it make any difference whether the pivot pin is above or below the shank?

"Answer: It would be harder to hold, the pin would be a lot harder to hold, in my estimation.

"Question: It would be harder to hold if it were where?

"Answer: Above it."

Mr. Gold: If Your Honor please, I think to make it proper counsel should tell what clamp Mr. Graham was testifying about in the testimony he just read.

Mr. Morris: I am sure the only patent involved in that lawsuit was the 811. We hadn't come to 798 yet. My question is what your attitude was about the location of the pivot point above the shank at that time. Now, having heard that rereading of your testimony in the first case, are you still saying now that at the time [420] of the first Jeoffroy trial you already had the feeling or the idea that locating the pivot pin above the shank would improve the structure? A. In a way probably.

Q. And would make it a better device? A. In a way.

Q. Is that what you testified to in that case, that I just read to you? A. I don't know that I exactly said that there, but it is possible that—

Q. You were indicating exactly the contrary feeling about locating the pivot pin above the shank, weren't you?

A. I said there the pivot pin would wear more if it was above it.

Q. Didn't say it would wear, you said it would be harder to hold, didn't you? A. Well, that would result in wear.

Q. Then moving the pivot pin above wouldn't solve any wear problem, it would increase the wear problem? Is that your testimony? A. It would increase the wear on the pin above what it would be if the pin was underneath. If all the pressure and the weight was up against the pin, the pin would wear more than it would if the pin was underneath and didn't have anything to do but hold the fulcrum plate [421] forward.

Q. So to improve your 811 clamp and answer some of the problems that you had with it, you situated your pin where it would wear worse, wear more? A. There are many points there to consider.

Q. All right. Now then, I wish you would just tell me, tell the Court what you first did when you set about designing 798. A. I don't know that I remember exactly. I had the thought and of course we made the drawings and we made a sample.

Q. When did you make the sample? A. I don't remember that date.

Q. Do you have any idea when the date was? A. No.

Q. What else did you do? A. That is all I can recall just now.

Q. Some drawings were made and a sample was made? A. Yes.

Q. Is that it? A. Yes.

Q. Did you ever get it in form to take it out in the field and test it? A. Yes.

Q. When did you do that? [422] A. I don't remember the date.

Q. Was it 1962? A. We tested in the shop first and I don't think we ever went to the field with it till this trial came up.

Q. 1962? A. Right.

Q. So from whenever it was, sometime before you filed the patent application, you had never taken one of them

to the field until just before this trial in 1962? A. Right.

Q. And you have never manufactured one of them? A. Yes.

Q. Never sold one of them, that has been stipulated here in the evidence, that it has never been manufactured and sold.

Mr. Fishburn: If the Court please, I think it has never been sold, it has been manufactured.

Mr. Morris: You have stipulated to the contrary, that is has never been manufactured.

Mr. Fishburn: Never been sold.

The Court: What is the stipulation, manufactured and sold, in the conjunctive or in the disjunctive? What is the number of the stipulation?

Mr. Morris: Well, I suppose it could be disjunctive. I don't know whether—

[423] The Court: No. 3 says, "spring clamps in accordance with patent 798 have never been manufactured or sold by W. T. Graham."

Mr. Morris: That is what I thought.

Mr. Fishburn: I am sorry, I thought it was "and."

Q. (By Mr. Morris) So you have stipulated that it has never been manufactured or sold, and now is there something different about that? Have you now just before this trial gotten one into manufacture? A. Yes.

Q. Do you have one here? A. Yes.

Q. Will you let us see it, please? A. Yes. It is over there (indicating).

Q. Would you mind stepping over here and identifying it, please.

Mr. Fishburn: If Your Honor please, I would like to read this Paragraph 3. It states, "Spring clamps in accordance with United States Patent No. 2,627,798 have never been manufactured or sold by the Wm. T. Graham, Graham Plow, Inc., or its corporate predecessors." I am not sure that this clamp is exactly in accordance with this patent. In any event, this stipulation was started before this [424] clamp was made and I didn't notice the wording of that claim was "or" instead of "and", so that is how the

error came about. This clamp was just recently made and is a factory made clamp.

The Court: Is that made in accordance with the specification for the 798 patent?

Mr. Fishburn: It is possible it could be read on the claims in the patent, yes.

Mr. Gold: It has different features, Your Honor, than what is shown in the drawings of the 798 patent.

Mr. Morris: Are you finished with the explanation?

Mr. Fishburn: Yes.

Q. (By Mr. Morris) Then so our record will be straight, Mr. Graham, the nearest thing that you are willing to say that has been manufactured by the Graham Plow Companies that might be in accordance with the 798 patent is this great big device here which has a tag on it that says, "Field tested April 3, 1962." I will identify that as Defendants' Exhibit 50.

Mr. Gold: If Your Honor please, I would like to state Mr. Graham also has another patent No. 2,935,148, which I think applied to the clamp. Issuance date was May 3, 1960.

[425] Q. (By Mr. Morris) Now, to return to my question, Mr. Graham, the device which I just pointed out and which will now be marked as Defendants' Exhibit 50, is that the only type clamp that you have ever made, your companies have ever made, which you think might be in accordance with the teaching of this 798 patent? A. That is right.

Q. And the first one of those to come out was April, 1962? A. I don't remember the date, but I think that is about right.

Q. All right. So then for the period, whenever it was that you first had this idea for 798, down until April, 1962, it had never been taken—one of them had never been to the field and tested, had it? A. That is right.

Q. And all of these improvements to make a better operating structure, to eliminate wear, which were incorporated into 798, you didn't put into the field, did you? A. We improved our other clamp and didn't put that one in the field.

Q. You continued to manufacture and sell a clamp of the general sort, type, of 811, didn't you? A. We improved that clamp, yes.

Q. You improved that clamp by fastening the shank and the [426] bolt together to take the pull off the spring rod, just like Jeoffroy had done back before that trial, didn't you? A. I don't remember what he did.

Q. And you incorporated a means for taking the pull off the spring rod in your 811 type of structure, didn't you? A. Yes.

Q. You left the pivot pin down below the shank? A. Yes.

Q. And you left the plate down below the shank? A. Yes.

Q. And you left the shank still so that it had a floating type of movement between the underface of the fixed member and the upper face of the hinge member, didn't you? A. To some extent, yes.

Q. All right. Now, I want to be very specific about this particular matter, and I want to see if this is not entirely accurate. The changes made in your 798 structure as shown in the patent over your 811 structure were four in number. 1, the plate was moved above the shank. 2, the pivot pin was located above the shank. 3, A bolt was provided to fasten shank and plate together at the front and take the pulling load off the spring rod. And 4, a stirrup or a loop element was [427] added at the rear of the plate to support the shank in that position—in that area. That is all of them, isn't it? A. I believe that is right. That is all I can think of now.

Mr. Morris: Your Honor, I will pass this witness for the moment. I want to come back on the matter upon which he is going to refresh his memory, if he can, after the recess.

Mr. Fishburn: We have no cross-examination at this time, Your Honor. We might have later.

* * *

(Recess.)

Q. (By Mr. Morris) During the recess, Mr. Graham, have you checked to see if there are any records here from

which you can refresh your memory— A. Yes.
[428] Q. —and recall when you first commenced the designing of the 798 clamp? A. Yes.

Q. What have you checked, please? A. I read the records of a trial, and I testified that—

Q. Just a minute. You have refreshed your memory from the record of your testimony in the second Jeoffroy case, I take it? A. That is right.

Q. All right. And what is the date that you now say you commenced the designing of your 798 structure? A. In March, 1950, was when the girl made the drawing, and I must have—I made a pencil drawing, I remember, it must have been—at least it was some time before that. I would say sometime late '49.

Q. Then the first drawing that you have that can be produced here is the one that has been attached—or photostatic copy of which has been attached to the stipulation and is the drawing dated March 16, 1950? A. Right.

Q. And that of course was approximately—that date is approximately three weeks before the beginning date of the first Jeoffroy trial, isn't it? You will recall the first Jeoffroy trial was April 9, 1951. A. I don't have that date in mind.

[429] Q. In order that we don't have any quibble about the date, I have the printed record here which reflects that the trial commenced—"Be it remembered that on this 9th day of April, 1951, the above entitled numbered cause came on for trial before the Honorable Joseph P. Dooley." So you wouldn't question the fact that the beginning date of the trial was April 9, 1951, would you? A. No.

Q. All right. Then do you think you had your idea complete, fully developed, for the 798 structure at the time that drawing was made on March 16, 1950? A. Now, I made the pencil sketch before that, and the way I remember it, it must have been about December 1949, sometime in December.

Mr. Morris: Will you read my question back.

(Question read.)

A. We had it complete as far as the drawing would show, I suppose, I don't remember exactly.

Q. Well, did you have your mind made up and crystallized as to what was going into the structure of the 798 clamp at that time? A. It should reflect on the drawing, Tom. I made some pencil sketches and then I made the drawing, and it should reflect in there.

* * *

[430] Q. (By Mr. Morris) Mr. Graham, will you look at the photostatic copy of the drawing, which is attached to the stipulation here, which is marked Plaintiffs' Exhibit F. That is the drawing which was dated March 16, 1950, isn't it? A. That is what this shows, yes.

Q. Does that drawing dated March 16, 1950, reflect the complete 798 structure? A. I couldn't testify that it does.

Q. Do you know what that drawing shows, Mr. Graham? A. Yes. I couldn't say this is complete. It looks like it is.

Q. You couldn't say it is complete? A. I believe it is.

Q. What did you tell the draftsman when you assigned her the job of making that drawing? A. I don't remember exactly what I told her, but I give her a pencil sketch.

Q. Do you remember if you told her what to put in it? A. I give her a pencil sketch and I believe this reflects it.

Q. Then are you willing to say that your idea for the 798 structure was complete at that date, March 16, 1950? [431] A. To the best of my judgment it was.

Q. Yet in April 1951 you testified, as we have already shown here, that you thought the location of the pivot pin above the shank would not be nearly as good a structure, didn't you? A. I testified what, Tom?

Q. That you thought the location of the pivot pin above the shank would not be nearly as good a structure as having the pivot pin below the shank? A. When did I testify that?

Q. I read it to you here in the record awhile ago. A. I don't remember testifying that.

Mr. Morris: That is all, Mr. Graham.

Mr. Fishburn: No cross-examination of this witness.

(Witness excused.)

[432] CLARENCE T. FISHLEIGH, called as a witness in behalf of the defendants, being duly sworn, testified as follows:

Direct Examination by Mr. Morris.

Q. Mr. Fishleigh, state your full name, age and residence address, please. A. Clarence T. Fishleigh. I am 66. I live in Deerfield, Illinois.

Q. What is your occupation? A. I am a consulting engineer, registered as a professional engineer in a number of states, including Illinois, Ohio, Michigan and others.

Q. Do you have a regular office from which you conduct your business occupation? A. Yes, I do.

Q. Where is that, please? A. In Chicago, in the Engineering Building, at the corner of Wells and Wacker.

Q. How long have you lived in Chicago? A. This last time I have been there about ten and a half years. I was born and raised in Chicago.

Q. In your lifetime of education, training and experience, do you feel that you have had education and experience which would qualify you in any way to advise a Court [433] upon engineering matters such as may be involved in this case? A. Well, I believe that I have, yes, sir.

Q. Would you outline for us, please, what that training and experience is. A. After graduating from Lakeview High School in Chicago, I went to the University of Michigan and spent four years, from 1913 to 1917, in the college of engineering at that school. In 1917 I graduated with a degree of Bachelor of Science in electrical engineering just in time to get into the First World War.

Q. How long did you stay in service? A. About two years.

Q. What did you do while you were in service? A. Well, I served overseas as a bomber, navigator, gunner, observer. In those days, in the two-place machines we did everything except pilot.

Q. After your discharge from the Air Force then what did you do? A. I went to work for the Ford Motor Company.

Q. In what capacity? A. First I worked on regular production jobs, but was given the opportunity as a student production worker to work for a relatively short time on a great many different production operations.

[434] Q. While you were there did you do some work in experimental engineering, some work on research projects, things of that sort? A. Yes, I did, I was assigned to a number of such projects and my work in connection with those carried me quite regularly and extensively into a great many departments of the Ford Motor Company in Dearborn—or at that time in Highland Park, Michigan.

Q. Where did you go after leaving Ford Motor Company? A. I went with the American Car and Foundry Company in the division making automobile valves.

Q. What, generally speaking, were the type of duties that you had there? A. When I first went there I was in charge of their engine testing department, and then later, while still retaining my duties in connection with testing, I became assistant production manager.

Q. As I understand it, you are now primarily engaged in consulting engineering work, is that correct? A. That is correct.

Q. When did you start your occupation, profession, as a consulting engineer? A. In 1930.

Q. And have you followed that occupation continuously since that time? [435] A. Yes, sir, I have.

Q. As a consulting engineer would you outline for us, please, some of the types of jobs or experience or training that you have had that might bear upon your qualifications here. A. We have done two different general types of work. The first was what might be called a general consulting business along automotive and mechanical engineering lines, with particular reference to what might be called production, engineering of new products. In addition to that, I have done considerable work in connection with engineering testimony in patent litigation.

Q. As a consulting engineer have you had frequent opportunities to test new equipment, test designs and performance of equipment, things of that sort? A. Yes, I have tested new equipment and proposed equipment in lab-

oratories of a number of schools such as the University of Michigan, University of Detroit, Case School of Applied Science, Illinois Institute of Technology, New York University, and also in the laboratories of a number of industrial concerns and also on road tests and field tests.

Q. Have you in that experience had an opportunity to study patents, patent histories, file wrappers and [436] their contents from the standpoint of mechanical elements and claims of patents, structures disclosed, and so on? A. Yes, sir. I have studied certainly many hundreds of such patents and possibly even into the thousands.

Q. Have you testified in a number of patent cases? A. Yes, sir.

Q. In a number of different courts in the United States? A. Yes, sir.

Q. In various parts of the country? A. Yes, sir.

Q. Who are some of the clients for whom you have done consulting work? A. I have done consulting work for a number of individuals and small companies, a great many such, in fact, and also for a considerable number of large companies such, for example, as Ford Motor Company, Chrysler, General Motors, International Harvester, Linde Air Products, Sunbeam, and so forth.

Q. Are you a member of any professional societies or professional organizations? A. Yes, sir.

Q. What are they, please? A. I am a member of the American Society of Mechanical Engineers, the Western Society of Engineers in Chicago, [437] National Society of Professional Engineers, and I have been a member of the Society of Automotive Engineers for approximately 30 years.

Q. I believe you have already stated that you are a registered professional engineer in a number of different states? A. That is correct.

Q. Do you have any law training, Mr. Fishleigh? A. Yes, sir.

Q. Do you have a law degree? A. Yes, sir.

Q. Are you engaged in the practice of law in any way at this time? A. No, sir.

Q. Do you have any material, monetary interest in the outcome of this lawsuit? A. No, none whatsoever.

Q. What experience have you had with structures such as farm implements? A. I have been generally familiar with farm implements since I was 15 years old and had occasion to spend my summers and all vacation time on my brother's farm. I have been engaged in consulting work in several instances in connection with farm implements, and of more recent years have spent some time as a user on [438] farms that my brother-in-law operated and where I spent frequent time.

Q. Have you had occasion to become familiar with the particular types of ground working tools or implements that are here involved in this suit? A. Yes, I first became familiar with this type of implement in late 1950, and have done various things in connection with them at that time and more recently.

Q. All right. You of course testified as an expert or as an engineering witness for Jeoffroy Manufacturing in the first of the cases between Jeoffroy and Graham, did you not? A. Yes, sir.

Q. Involving the 811 type spring clamp patent? A. Yes, sir.

Q. And also involving the brace type clamp patent that was mentioned here a day or so ago? A. That is correct.

Q. You have not been a witness or a consultant in any of the subsequent cases between the Graham Company and the Jeoffroy Company, have you? A. No, sir, I have not.

Q. You have not been a consultant or a witness or you were not a consultant or a witness in the Cockshutt [439] case, were you? A. No, sir.

Q. Or were you a witness or a consultant in the Glencoe case which Graham filed against Glencoe Company? A. No.

Q. In preparation for your testimony in the first of the cases, did you conduct some actual field tests with the plows and clamps and shanks and so on in the form in which they existed at that time? A. Yes. I conducted field tests which were under my supervision and direction and in which I participated, and I also was present at

the time of certain inter-party tests out at Mr. Graham's farm, I believe it was, on his property, in connection with that trial, at which a considerable number of demonstrations were made.

The Court: Was that during the first Jeoffroy trial?

Mr. Morris: During the first Jeoffroy trial, Your Honor, yes.

Q. (By Mr. Morris) Now, since the conclusion of that case, have you had any further opportunity to examine, test or observe the plows of the sort we have involved here? A. Yes. I had occasion to see quite a number of different plows in operation in the so-called rock country up in [440] the neighborhood of Rock Lake, North Dakota.

Q. Was a specific trip made to the rock country for the purpose of observing the plows in operation, to observe the conditions and observe the performance of the tools, make some tests with them in connection with this case? A. Yes, sir.

Q. Have you studied the Graham patent 798 that is here in suit? A. Yes.

Q. Have you studied the file history? A. Yes.

Q. File wrapper and contents? A. Yes.

Q. Have you studied the patent references which were cited by the Patent Office in connection with the application? A. Yes.

Q. Have you studied the patents that have been cited by the defendant here in the answer in this case? A. Yes.

Q. Have you studied the Deere structures 650 and 100 which are here accused? A. Yes, I have.

Q. Have you studied other of the spring clamps that have been demonstrated here in the courtroom during the [441] past few days in recent months, such as the Graham 811. the Jeoffroy HT-5, the Jeoffroy HT-5-A, the Jeoffroy HT-6-AD, the Glencoe clamp which has been mentioned a time or two? A. Yes, I have.

Q. Do you feel that you have a good working knowledge of all of those structures as to how they perform and what their structure elements are? A. I believe that I have, yes, sir.

Q. Have you made a detailed comparison of the structure as disclosed in the Graham 798 patent with the two accused defendants' structures here? A. Yes, sir.

Q. Have you made a detailed comparison of the claims, the structure as defined in the claims of that patent as applied or in relation—as applied to or in relation to the two accused structures? A. Yes, I have.

Q. Before turning to a consideration of the 798 patent itself, Mr Fishleigh, I would like to ask you some questions about the prior art that existed ahead of Graham, that is, earlier in point of time, at least before his application or at some period before that. Have you studied those patents? A. Yes.

[442] Q. Have you made some drawings, colored drawings and some charts setting out some of the disclosures in those patents? A. Yes, I have.

Q. First I would like to ask you—well, actually it is quite clear, as shown by the evidence already, that the 798 spring clamp was not the first spring clamp for a chisel type plow? That is quite clear in the record already, is it not? A. Yes, I think that is quite clear.

Q. I wonder if even the Graham 811 spring type clamp was the first of the spring type clamps for the attachment of a ground working tool to the transverse member of a plow? A. Oh, no, it was not.

Q. Did that exist for some long period of time prior to even the Graham 811 disclosure? A. Oh, yes.

Q. Have you prepared, Mr. Fishleigh, any charts which will be helpful in pointing out and explaining such prior devices to the Court? A. Yes, I have prepared a chart which summarizes perhaps such showings and also some enlargements of the figures of said patents such as are shown on that summary chart.

Q. Will you take such charts and colored drawings or [443] enlargements as you may have, which you think will be helpful, and point out to the Court and briefly explain some of the representative prior art disclosures which show ground working tools or spring clamps for ground working tools. A. The first chart has been marked for identification as Defendants' Exhibit 11, and

it is a chart showing representative prior art disclosures of spring clamps for ground working tools, including one or more of the seven elements which are listed there, and the organization of the chart has been conducted in this way, that in addition to the title there are a number of photostatic reproductions of figures from various patents and drawings of some, in at least one instance or two instances, of prior use structures.

Q. Excuse me just a moment. Are those photostatic reproductions of patent drawings of patents which were either cited by the Patent Office or have been cited by the defendant here in its answer? A. Insofar as they are of patents that is true. In the case of the Jeoffroy SC-580 structure and the Glencoe structure they are reproductions of drawings which were made at least in the finished form at my office, based on the physical structures themselves.

Q. Are those drawings, however, accurate drawings of the [444] physical structures which you observed? A. Yes.

Q. And are they drawings of structures which have here been identified as prior use devices and have been so stipulated in the record? A. Well, they are drawings of structures which are here, and I don't know about the stipulation.

Q. Jeoffroy SC-580 is one covered by the stipulation, and the Glencoe is likewise one covered by the stipulation. Go ahead, please.

The Court: In what manner is it covered by the stipulation?

Mr. Morris: The stipulation as to the Jeoffroy SC-580, Your Honor, which is Defendants' Exhibit 2, is that it was manufactured and sold by Jeoffroy Manufacturing Company at least as early as January, 1949, and the stipulation as to the Glencoe structure, which has been identified as Defendants' Exhibit 3, is that it is a prior use structure which was manufactured and sold commencing with the design about the fall of 1949, and being actually placed on the market for sale and sold as early as March, 1950.

The Court: It is agreed then that these are prior art structures, these devices here?

Mr. Fishburn: Yes, sir.

[445] The Court: Very well.

Q. (By Mr. Morris) Go ahead, Mr. Fishleigh.

Mr. Fishburn: They are prior art as far as the 798 patent is concerned.

A. The first structure in point of time on this chart is the patent to Dunbar, United States Patent 211,003, which was issued in 1878. That structure is a disclosure of a spring clamp for a harrow. In explaining it I would like to refer to enlargements of the one sheet of patent drawings of that Dunbar patent which is on the easel and has been marked for identification as Defendants' Exhibit 12.

In this structure there is a frame of the tool member which is marked "A" in Fig. 1 on Defendants' Exhibit 12 and colored violet or light purple. Fastened to that frame member is a fixed member colored yellow and marked as "B".

Pivotally connected to that fixed member in such a way as to permit of pivotal movement is a hinge member "D", colored dark green on this chart. In addition to that there is a tool member "F" colored pink on this chart. In this instance the tool member extends generally in a vertical direction from top to bottom after the fashion of certain harrows as of that date.

[446] That tool member is fastened to the hinged member or pivoted member by means of a pair of bolts, "g", nuts "h", and a plate member "E". The bolts and the nuts and plate member are colored light green in these drawings.

One further element of this structure is a spring member taking the form of a loop marked "G" and colored orange in these drawings. Now, the arrangement is such that for normal operating conditions the spring member "G" exerts a force such that the pivoted member or shank attaching member is moved to the position shown in Fig. 1 where the bottom portion of it rests against and is stopped by the frame member "A", and in that manner is held in the ordinary working position for the tool.

Now, during operation there are two different forms of functioning can occur. In the first instance, there can be

a vibratory action on the part of the tool point and when and if some obstruction is encountered the arrangement is such that the point of the tool can move backward and upward so that upon continued forward motion, and I should say that in this structure the motion of the device is from right to left, as we see it on the drawings of Defendants' Exhibit 12, upon continued forward motion of the harrow framework, [447] as in those days of course pulled by a horse, that that tool member will clear the obstruction and once it has cleared the obstruction the spring member will force it back until the hinged member comes up against the frame and is stopped thereby and is held in normal operation.

Q. Mr. Fishleigh, do you find in the patent itself—do you have copies there before you? A. Yes, I have copies of the patent with me.

* * *

Q. (By Mr. Morris) Do you find in the Dunbar patent itself any reference to or description of the function or operation which you have just described to the Court? A. Yes. That is set forth I believe quite clearly, and I refer to the first page of the specification, the second column, and the second full paragraph.

Q. Would that be the paragraph just above the commencement of the claim paragraph? A. Well, just above —yes, the statement of "having described," and so forth.

Q. Will you read, please, that language.

Q. "The tooth applied in the manner above described will, [448] when working, continually tremble, and thus more thoroughly pulverize the soil, and will also, when caught by any root, stone, or other obstruction, turn backward enough to let the tooth pass over such obstruction and immediately enter the soil again."

Q. Now then, of the structural elements which you have set out in the block portion of the chart here of seven elements, how many of those do you find present in the Dunbar disclosure? A. I find all six of the structural elements set forth in the title of this chart present in the Dunbar structure.

Q. You say all six. Don't we have seven? A. Excuse me, I misspoke. All seven.

Q. All right. Does that complete your explanation of the Dunbar disclosures? A. I believe it does, unless you have some further questions.

Q. I believe that is all I think of that is particularly pertinent about it.

Will you consider the next of the devices which you wish to explain. A. The next one, in point of time at least, is the Cobb structure, shown in the lower right-hand portion of what I would call the main part of this chart.

Q. So we don't have any question about it, it is pretty [449] close to the lower center of the chart? A. Of the entire chart, yes.

Q. And it is labeled, of course, "Cobb," is it not? A. That is correct, and that is the Cobb patent 284,278.

Q. What is the date of that one, please, sir? A. That is 1883. This Cobb patent is also entitled, "Harrow", and here as in Dunbar we have a rectangular frame member. This one is marked "B", and again is colored violet or light purple.

Q. Excuse me just a moment, before going ahead with that, do you have a colored enlargement for Cobb? A. No, I don't.

Q. You did not make one for that? A. I did not make one for that. Fastened to the frame member is a fixed member marked "a", and perhaps we should refer to the other drawings of the Cobb patent as shown in the book of patents in order to get a better idea of the construction of that member "a". It is sort of a U-shaped member with eyes at what would be the left-hand end as we see it here in the Fig. 1, and that formation is shown particularly in Fig. 3 of the Cobb patent, and that fixed member is fastened to the frame member by means of bolts as shown here at the right or at the left end of that member.

At the right end of the structure, which [450] would be what has been referred to here, I believe, as the bight of a U-shaped member, that is, the lower cross portion of the U-shaped member, a hinged member "D", colored dark green, is associated. Now, that hinged member "D"

is shown particularly in perspective in Fig. 2 of the Cobb patent, and is shown to be a structure of relatively plate-like formation with a loop at the bottom to connect through the bight of the fixed member, small "a", again as it is shown perhaps best in Fig. 2 of the patent, has an opening or slot in that curved portion through which the upper part of the shank of the tool passes. The upper part of the shank of the tool passes through that opening in the hinged member and up alongside in contact with the longitudinal face of that hinged member, and then is bolted to the hinged member by means of the small bolts, unnumbered in this figure, but colored light green—about —oh, approximately midway from top to bottom of the dark green hinged member.

Q. Just a moment, before passing on there, Mr. Fishleigh. You mentioned a longitudinal face of that hinged member. Of course in our associated directions, as we have discussed them here, that particular face would be a vertical face in relation to the particular tool as shown by Cobb, would it not? [451] A. It would be a vertical face. It would be longitudinal of the axis or length of the shank member, but it would be a vertical face.

Q. Go ahead. A. That association of the shank with the hinged member provides a crossed pivotal connection between the hinged member and the fixed member. At the upper end of the hinged member there is a pin "r".

Q. Is that a small "r" ? A. Yes, I believe I am mistaken on it, though, it is not too clear here but I believe what that it is an "x", because down at the lower left end of the fixed member there is a seat which I know is "r".

In any event, there is a pin to which one end of a spring member "C" is fastened, that spring member being colored orange on this chart. The other end of the spring member is seated in a small seat "r" at the left-hand end of the fixed member "a", and upon the upper face of the frame member "B".

Now, this arrangement is such that the spring "C" exerts a force such that, tending to pivot the hinged member and the tool, the tool being marked "P", in a clockwise direction, about at the pivot point at the right-

hand end of the fixed member, and it pivots to that point as shown in these drawings where the [452] shank of the tool below the hinged member comes up against the side of the frame member as a stop, and limits the rotary motion in the clockwise direction and holds the tool in the proper operating position, as shown in full lines. But as the device is drawn through the ground if the point of the tool strikes an obstruction it will move backwardly and upwardly to a position such as shown in the dotted lines, and will move whatever distance may be required so that the tool will ride over and clear the obstruction.

Q. As it appears there on the chart, in its orientation on the chart, the leaf type circular spring would tend to—would it tend to move the upper end of the hinged member clockwise or to the right as shown in that drawing? A. Yes, it would tend to move it to the right, tending to move it from the dotted line to the full line position.

Q. And then would the forces on the ground working tool or the tool of the implement tend to force the tool in the opposite direction against the spring pressure? A. That is right. That would tend to move it from the full line to the dotted line position, and of course in the course of that movement would store kinetic energy in the spring and that energy would serve to return the tool back to its normal operating condition [453] or position as soon as the obstruction was clear.

Q. Now, in that particular structure, Mr. Fishleigh, as in the Dunbar structure which you have just previously described, would it be the frame member of the implement which provides the stop or base for determining the normal operating position of the tool? A. That is correct. In the Dunbar example, the frame, in cooperation or association with the hinged member, provides that stop function, and in the Cobb structure it is the frame in association with the shank of the tool that provides that stop function or positioning function.

Q. Could each of those structures be accurately described as having a rocking action? A. Yes, surely.

Q. The shank or ground working tool as having a rocking or pivotal action? A. Yes.

Q. Pivoting about a pivot point of the structure, or the pin? A. That is correct. Now, as the note below the drawing indicates, this Cobb structure also includes each of the seven elements listed in the title of this chart.

Q. Is there anything in particular in the specifications of that patent which would provide any further help in [454] understanding the structure or operation of that disclosure? A. Well, not specifically. Of course the structure is described in possibly even more detail than I have described it, but nothing special there.

Q. Just as a point of interest, the member which you have colored in yellow here and have called the fixed clamp member, is that in the specifications of the patent called a bail? A. A hinging bail.

Q. A hinging bail? A. Yes.

Q. All right. Now then, what is the next disclosure of prior art which merits some consideration, as shown on this chart? A. The next disclosure is the one immediately above Cobb. In other words, the first one to the right of the title at the upper portion of this chart, Defendants' Exhibit 11, and is the patent to Rix, 287,965, also issued in 1883, and I have prepared a colored enlargement of the sheet of figures of that patent, which I believe we could helpfully refer to, and which has been marked for identification as Defendants' Exhibit 13.

Q. Using the colored enlargement primarily, Mr. Fishleigh, [455] will you please describe and explain that structure and its mode of operation. A. As the title indicates, the Rix patent is also a structure for use as a harrow or an improvement in harrows. Here we have, as shown in Fig. 1 or Fig. 2, a frame member designated "B" and colored violet. Fixed to that frame member is a member colored yellow and marked "n" in the form of a pivot eye and a bolt extending through the frame member and held in place by a nut on the left-hand side of the frame member as we see it in these drawings. Pivotally connected to that fixed member by means of a bolt—or a pin, and it is the pin which is marked "n" and the fixed member appears to be a "v", but pivotally connected by means of the pin "n" colored light blue, is a hinged mem-

ber "c" colored dark green in part and in part a light green, as I will point out later.

That hinged member has a plate section which has a vertically extending flat face as wide as the shank and of substantial length in a vertical direction, in the direction of the shank at that point. It also has a pair of ears extending to the left from the plate member as we see it in Fig. 3 of the drawings, and there is one that we see and one on the other side which is not visible in the drawing, such that it [456] comes down and the pivot pin "n" passes through the holes in those ears to provide for the pivotal movement of that hinged member "c". The hinged member also has a stirrup type member "v". I don't just locate the name that is used in the patent, but it is a stirrup type member, in this case extending to the right from the hinged member, of such a shape and configuration that the upper part, the upper straight part of the tool member, the tool shank, can be passed through that and supported thereby.

In addition to the stirrup member "v", colored light green, the shank of the tool is fastened to the hinged member by means of a bolt and nut, also colored light green, and identified by the small letter "e".

At the upper end of the hinged member is a slot, unnumbered but shown uncolored in the upper end in Figs. 3 and 4 on Defendants' Exhibit 13, and there is a plate and curved rod marked "A", about which is a spring member, and that rod passes through the slot in the top of the hinged member and then a nut "e" is added to the end of the rod. and the arrangement is such that as shown in the dashed lines in both Figs. 1 and 2, the spring tends to press the hinged member "c". the upper part to the right or to rotate [457] it in a clockwise direction so that the upper part of the hinged member is held against the nut "e" as a stop member.

Q. Stop there just a moment, Mr. Fishleigh. In the dotted lines, the position of the hinge member and the upper end of the ground working element, would that be the position that you would call normal operating position? A. Yes. The entire structure is shown in that form and then either to indicate the movement forward of

the device or to help clarify the two showings, it is shown moved further to the left. In fact, what is being shown is the action there as the device would move forward with the tool in contact with an obstruction such as shown at "x".

Q. So that the solid lines then show it in a somewhat pivoted position as the tool is clearing a root or some other type of obstruction? A. That is correct.

Q. All right. A. Now, the arrangement then is such that in normal operation, normal conditions, the spring "A" will push the upper end of the hinged member clockwise up against the stop "e" on the end of the rod about which the spring is mounted, and hold it in an operating or normal operating condition.

[458] As the device travels through the ground, that is, as the tool travels through the ground and the frame of the plow is moved forward from right to left, as shown in Figs. 1 and 2, the tool will tend to vibrate, and if the tool hits an obstruction the point of the tool will be moved backward and upward relative to the pivoted point or framework until the end of the tool will slide over the obstruction, and in the course of so doing the spring "A" will be compressed and energy stored in it, so that once the tool has cleared the obstruction the spring will tend to return the tool to its normal operating position with the top end of the hinged member pressing against the nut "e" to perform the stop or positioning function.

Q. Referring to the specifications of the patent, I believe you stated a moment ago that you couldn't pick out right quickly the language used in describing what you called the stirrup "v". I think you will find if you look in line 4 of the first column that that element is described as a loop. Did I say line 4? Line 24 of the first column. A. Yes, that is correct. I should have seen it, because I have it underscored in red. The loop "v" which surrounds the tooth. But I can say so far as functioning [459 and 460] is concerned it has the same functioning as the devices which have heretofore in this trial been called stirrups.

* * *

Q. Does the shank attaching pivoted element, as shown in the Rix patent, Mr. Fishleigh, have any resemblance to shank attaching members which have been in evidence and discussed here during the past three days? A. Yes. The shank attaching member or hinged member of Rix bears a marked resemblance, having a long, flat platelike portion, a stirrup portion, and a pair of lugs which serve to pivot the structure in much the same manner and in some degrees in almost the same detail as that shown in the Graham patent in suit, 798.

Q. I would like to note one item here on the enlargement, Defendants' Exhibit 13. I see that you have the plate portion to which the spring member is attached or mounted colored in brown rather than yellow. Is there [461] any particular reason for in that instance coloring that spring support brown rather than yellow? A. No particular point. I felt that that entire spring mounting mechanism could well be colored in the brown, but it could very well be colored as yellow as a fixed member of some sort attached to the framework.

Q. Actually of course it has no direct association with the part which you have colored in yellow, does it? A. No.

Q. Its association is by means of being attached to the same frame member of the plow? A. That is right.

Q. Of the structural elements set up on the chart, which ones do you find present in the Rix disclosure? A. I find all seven present in Rix.

Q. Will you turn next to the next item or part of the prior art which you would like to explain. A. The next one which I have listed is the Graham 811 patent.

Q. Have you prepared also colored enlargements of those drawings, the 811— A. Yes, I have prepared colored enlargements of the three sheets of drawings of the Graham 811 patent, which have been marked respectively as Defendants' Exhibits 14-A, 14-B and 14-C. That is the structure [462] which is shown here in the large chart, Defendants' Exhibit 11, directly below the title at the bottom of the chart.

Q. Before you start your explanation there, Mr. Fishleigh, is this now the first of the prior art disclosures that

you considered which were cited by the Patent Office in the history of this patent? A. I think so, but I would have to check that.

That is correct.

Q. Neither Dunbar, Cobb nor the Rix patents were cited in the file wrapper? A. No, they were not.

Q. All right. Go ahead with your explanation, please

The Court: You say neither Dunbar, Rix, nor Cobb was cited?

Mr. Morris: None of those three was cited by the Patent Office.

Q. (By Mr. Morris) Is that correct? A. That is correct.

Q. Proceed with your explanation then of the Graham 811 disclosure. A. As the title indicates, this Graham patent, at least the portion we are concerned with, covers a clamp or mounting for a so-called vibrating plow. The principal difference, just in glancing at the structures, in this [463] structure from those that we have seen previously, is that the main part of the shank runs in a horizontal direction, that is, the upper part of the shank in the Graham 811, whereas the shanks of the tools were generally—that is, the upper portion was in a vertical direction in the other three structures, and the clamping means rather generally could be said to be turned over 90 degrees here from what we had previously.

In this Graham 811 patent there is a frame member shown as an I-beam, sometimes also referred to as an H-beam when it is turned the other direction, and of course gets its name from the configuration as one looks at the end of the beam or a cross section of it such as shown in Figs. 4 and 5 on Defendants' Exhibit 14-B.

There is in addition to that a fixed member, referred to generally in this structure as 11, I believe it is, and in any event colored yellow in the drawings in all cases in this structure. Now that fixed member is such that it conforms generally to the shape of the lower—has an opening which conforms generally to the shape of the lower flange of the I-beam, and in this structure had the rather cumbersome method of assembly of having to be put onto the I-

beam or plow frame member by starting at one end and sliding it [464] across, so that if one happened to want to get out—take off or put on the member that I am pointing to here in the middle of the middle frame, you would have to do a certain amount of disassembling and take off some of the other clamps in order to get to it.

Q. Mr. Fishleigh, that particular detail, of course, while it was a drawback of the particular disclosure there, does it have any significance to the issues under consideration here? A. No.

Q. All right. A. Now, that fixed member has a lower longitudinally extending surface which in these drawings we have colored red, and which is referred to, I believe, as 56 in this structure. And on either side of this relatively wide and relatively long longitudinally extending lower face there are a pair of flanges which extend down, marked 54 and 55, so that a channel-type formation is provided or what might be called a way into which the shank upper part or forward part of the shank member and the hinged member or fulcrum plate can be mounted.

At the back end, toward the back of those side flange members and at the rear of the longitudinally extending face, but below that, extending downwardly [465] are a pair of ears, one on either side, marked 39 and—well, 59 and 60. Yes, the number was 59 rather than 39; 59 and 60. Those ears are provided with openings 61 through which a pivot pin 62, colored light blue, extends.

Then there is a fulcrum plate member 63, which has a longitudinally extending upper face "63" relatively wide and quite long and flat, and in the bottom of that member there are two transverse grooves 65 and 68. The groove 65 is provided for association with the pivot pin 62 and, as has been demonstrated, the purpose of that groove is to permit the fulcrum plate to be positioned and pivot about that pivot pin 62 in the course of the normal operation of the device. That relationship is shown in Figs. 4 and 5 of Defendants' Exhibit 14-B.

At the opposite end the transverse groove is for association with the portion of a T-headed rod or bolt that I will come back to shortly. Also at the back end or toward the rear—it is toward the forward end as the device is mounted

on the plow, to the right-hand, lower right-hand end of the—at the fulcrum end as we see it in Defendants' Exhibit 14-C, there is an oblong hole 69 that extends through the fulcrum plate. Mounted between the fulcrum plate and the [466] bottom longitudinal member or face 56 of the fixed member is the upper portion of the shank, that shank being numbered generally as 33, the upper portion 34 and the entire tool shank being colored pink in this series of drawings, Defendants' Exhibit 14-A, B and C.

The forward end or the lower right end, as we see it in Fig. 7 of these drawings of the shank member, has an oblong hole 70, and also in the fixed member there is a forwardly extending portion 57 which also has an oblong hole 58.

When assembled into the position shown in Fig. 4, that is, the relative position of the fulcrum plate or hinged member 63 and the shank 33, 34, the T-bolt 71 may be put through, pushed up through the holes 69, 70 and 58, and then encircled by a spring member, coil spring member 66 in the position such as shown in Fig. 6 on Defendants' Exhibit 14-C, with the bottom of that spring member seated upon the portion 57 of the fixed member, and the upper portion of the spring associated with a washer and nut to the T-bolt and through that back down to the hinged member.

Now, in normal operating position, that is, at the start, nut 76 is end up so that the spring 66 exerts sufficient pressure or pull upon the fulcrum plate so as to hold the shank member and the fulcrum [467] plate in the operating position with the upper portion of the shank member contacting the lower portion, the lower face in part at least of the fixed member, to provide a stop means and hold the shank and the hinged member in normal operating position.

During operation of the device the shank member will tremble or vibrate as described for the Dunbar structure in the Dunbar patent, and when and if—

Q. Let me stop you there just a minute, if I may, Mr. Fishleigh. In describing the vibratory action of the tool or disclosing it in the patent itself, here in Fig. 4 is there anything there to indicate the vibratory action of the tool?

A. Yes. The contour of the bottom part behind the tool, and I should say in this instance that the movement of the plow is from left to right, as shown in these drawings, and thus the part to the left of the tool itself indicates the territory or the part of the ground which has been covered by the tool. The undulating shape of the bottom into ridges "a" and valleys "b" indicates vibrating—an attempt to illustrate what purportedly occurs in the way of a vibrating action of the plow point to provide this irregular, rough bottom to the furrow under the tool.

Q. Would that be an anticipated or expected type of action [468] with a spring tooth shank as is disclosed here? A. Yes.

Q. And would that be true whether it was mounted with a fixed clamp or a spring clamp? A. Yes. That particular type of action, as I understand it, results not from the action of the spring clamp but from the resilient action of the shank of the tool itself.

Q. All right. Now go ahead with your explanation, please. A. Now, when and if an obstruction is encountered by the point of the tool or other portion of the tool, the tendency will be for the tool in this instance. as we see it in Figs. 4 and 5 of Defendants' Exhibit 14-B, to move to the left and upwardly—

Q. Just a moment. Is there any disclosure in Fig. 4 of the rocking action or pivotal action now which you are commencing to describe? A. No, but that shows what you have called the home base position, the starting position, whereas Fig. 5 shows the position to which the tool has moved as a result of hitting, in this instance, apparently hard ground, because no specific obstruction is illustrated.

Q. All right. Go ahead. Excuse the interruption. A. In any event, the tendency would be to move up and backward as far as the frame of the tool is concerned [469] in such a way as to produce forces tending to pivot the frame and the hinged member about the pivot pin 62.

Q. Now. you say pivot frame and the hinge member? A. Well, that is the start. Now I will come into the detailed departure from—well, the frame? No. If I said frame I meant shank.

Q. All right. You meant shank. A. Now, in this particular structure, because of its special arrangement, there is a slight clearance between the shank and the fixed member and the shank will then pivot, as has been previously indicated, about the rear end of the longitudinal underface of the fixed member, that is, the point to which I am now pointing, and the point just slightly—just below and slightly to the left of the lower left-hand end of the lower flange of the I-beam frame member. So the pivotal action will be there, but in the meantime the right-hand end, because of the tendency for counterclockwise movement of the shank and hinged member, regardless of the small difference in pivot points, the tendency will be for the right-hand or forward end of the shank and hinged member to move downwardly, also in a generally counterclockwise direction, about the pivot points, and that will compress the spring that will pull the rod 71 downwardly and compress the spring 66, storing [470] energy therein.

Q. Excuse me again, please. The forward end you said would tend to pivot in a counterclockwise direction. Did you mean in a clockwise direction? A. Well, if I did I misspoke once more.

Q. All right. A. In a clockwise direction. In any event, it will tend to compress the spring 66 and store energy so that when the obstruction is passed and the tool is free to return to its normal operating position or to return at least part way to that position, the force of the spring will pull up the forward end and this time in a counterclockwise pivoting direction, pulling up this right-hand end as shown in Figs. 4 and 5, until the upper face of the shank contacts the lower longitudinal face of the fixed member and those two function as a stop means to position the tool in normal home base or normal operating position and condition.

Q. Now then, Mr. Fishleigh, how many of the mechanical structural elements as set out on the chart do you find present in the Graham 811 structure? A. I find six of the seven elements present in this Graham 811 structure. the one which is missing being the one numbered 6 in the title, that is, "Means for connecting the shank to the pivoted shank attaching member."

Q. Why is it that you have concluded that that element is not found in the Graham 811 structure? A. Because with this arrangement, as has been indicated earlier today, there is a floating attachment, a floating relationship between the shank and the hinged member, and as the device operates there is a degree of longitudinal movement as between the two, the only means of pulling the shank forward being through this spring rod 71, and while they are held together, that is, the fixed member, the shank and the pivoted member are held together by the spring pressure in the position shown in Fig. 4, there is no attachment or connection in the sense at least of the 798 patent which has formed the basis of these structural elements.

Q. Would it be accurate to say that there is a means disclosed which prevents the shank from being pulled out of the device? A. Oh, certainly.

Q. But that that is not a means which connects the shank and the shank attaching member together in the sense of the structural element of the 798 patent? A. That is correct.

Q. Now, Mr. Fishleigh, have you examined the actual commercial clamp structure, the 811 structure, of the type which has been identified here as Defendants' [472] Exhibit 6? A. Yes, I have examined this structure, I have seen that type of device operate in the field, I have examined the wear of them in instances both in 1951 and more recently in 1961, and have seen them in operation in the field, both under what might be called demonstrating conditions and in the field in actual service conditions.

Q. Are the mechanical elements as set out on the chart there found in the commercial structure, Defendants' Exhibit 6? A. Yes, there is structure in this Defendants' Exhibit 6 which provides a response for those elements, and which could be said to be structure as defined by those various elements.

Q. Do you find on this particular exhibit a further element or a portion of the clamp which is not actually set out in the Graham 811 patent disclosure? A. Yes.

Q. What is that? A. There is a brace member with which I was quite familiar in the so-called brace clamp,

which was in suit in the first Graham-Jeoffroy case and which was held to be invalid.

Q. Would that in any way affect your finding in response [473] to the mechanical elements that are described on the chart in this structure? A. No. That is just an additional bracing action operation, such as you might stick a 2-by-4 up if you had a wall that was sort of falling down.

* * *

Q. (By Mr. Morris) Mr. Fishleigh, will you turn now to a consideration of the next portion of the prior art which you would like to explain to the Court. A. I would like to turn to the Traeger patent, shown in the lower right-hand corner of that chart, and that is—

Q. Is that as shown in the Traeger patent? A. Yes, 111,910, Australia.

[474] Q. Now, this was one of the patents which was cited by the Patent Office in the file history of this patent, was it not? A. That is correct.

Q. Do you have colored enlargements of the sheet of drawings to that patent? A. Yes, I have.

Q. I notice that you have placed on the easel a colored enlargement identified as Plaintiffs' Exhibit 15. Will you use that exhibit, please, and explain the structure of the Traeger disclosure, the structure and operation. A. The Traeger structure is entitled, "An improved spring tyne for agricultural implements." As shown generally, there is what is called an "S" form of tine or tool shank in the terms which we have been discussing, including the portions that I have colored yellow and pink. It is contemplated but not indicated in detail that the upper end of such an S-shaped tine will be fastened to a frame member. But where many such S-shaped tine member had been fastened with rigid clamps to a frame member and the entire operation dependent upon the resiliency of the S-shaped member, the entire tine member, in this case Traeger introduces a spring clamp arrangement as between the upper left-hand portion of the S-shaped tine and the lower portion, as between the [475] portions marked 1 and 2, and consequently for this analysis I have colored

portion 1 in yellow as being the fixed member as far as this clamp is concerned, although clearly it is a flexible member and it itself is attached back at its upper end or expected to be attached to a frame member.

The Court: Where would it be attached to the frame member?

A. What part of the tine?

The Court: Yes.

A. The upper left-hand section to which I am now pointing.

Q. And could the frame member be either situated underneath that particular extension or above the extension, Mr. Fishleigh? A. Yes.

Q. And would be fastened in the usual means by bolts or something of that sort? A. That is correct.

Mr. Fishburn: I don't like to keep harping on this subject, but I think counsel is still leading his witness.

Mr. Morris: You are right again, Mr. Fishburn. I will try to watch it.

A. As far as the spring clamp arrangement is concerned, we have the portion 1 of the tine member colored yellow [476] and it has a reinforcing member marked 15 of comparable shape and inserted in the curve. The member 1 at its lower right-hand end is formed into an eye loop, marked 4, which serves as the bearing for a pivot pin 3. The pivot pin 3, as shown both in Figs. 1 and 2, also carries in pivotal relationship a hinged member 5, colored dark green, and that hinged member is a sort of U-shaped member with the upstanding flanges, as we see them here in Figs. 1 and 3, and also a flange extending underneath the shank 2, as we see it in cross section here in Fig. 3. One of the flanges such as shown in Fig.—that is, the vertically extending flanges 5, such as we see here in Fig. 1, is at either end of the pivot pin as shown, for example, at the two ends here in Fig. 2.

Then there is a second member, that is, the shank member 2 at its upper left-hand end also is formed into a loop carrying a pivot, that pivot being the end of the bolt 11, which I will return to. Then that shank member is connected by means of a small rivet marked 6 in Fig. 1, and

marked 6 in its tilted or dash-dot line position in Fig. 3. So that it is riveted to the lower horizontal flange of the hinged member.

A pin or a rod, curved rod 11, which is [477] fastened through a bolt member, pivot pin 12, as shown here, in fact there are two such rods as shown here in Fig. 2, extend upwardly from the other outside edges of the shank member 2 up through the hole in the yellow fixed member 1 and the member 15, and a plate, small plate 13, as shown here in Fig. 2, extending from side to side, and then there are springs 10 colored orange slid over the upper portion of that rod or those rods 11, and held in position and their tension or compression adjusted by means of a washer 17 and a pair of nuts 16. In that condition the springs tend to hold the upper left-hand end of the shank portion 2, as we see it in Fig. 3, up against and in contact with the bottom face of the member 1. That is, there is of course on this member 1 a longitudinally extending face which is colored red in Fig. 3, and a similar longitudinally extending upper face on the shank member, also colored red, in Fig. 3, and under the action of the spring member 10 those two are moved into contact to provide a stop function and position the tool member, tool shank 2, with the tool member at its lower end in proper operating condition.

Now, when and if the tool hits an obstruction, as the device is carried forward, and in this instance the movement of the device would be from right to left, [478] as shown here on Defendants' Exhibit 15, when an obstruction is encountered, the tool would tend to move from the full line colored position of Fig. 3 to the dash-dot position of Fig. 3, the point of the tool moving rearwardly and upwardly with respect to the movement of the plow or agricultural implement pivoting about the pivot pin 3 so that the upper left-hand end of the shank member 2 and the pivot pin 12 would move downwardly in a counterclockwise direction from the full line colored position to the dashed outline position, and in so doing would tend to compress the spring 10 and store energy therein.

As soon as the obstruction was passed, the spring would tend to return the shank member 2 and its point to the

normal operating position, with the upper face, marked red here on the upper left portion of the shank 2, in contact with the lower longitudinally extending surface or face on the bottom of the fixed member 1, and thereby return the device to its so-called home base position or its position for normal operation.

Q. Mr. Fishleigh, in that particular structure, while you have colored, as you have already pointed out here, the forward extending portion of the S-shaped tine in yellow, would it be understood that that particular portion would likewise have some flexibility which [479] would tend to flex downwardly or upwardly as forces were encountered on the point of the ground working tool? A. That is correct, that is what I have—

Mr. Fishburn: If Your Honor please, that calls for a conclusion of the witness; is very leading also, Your Honor.

The Court: Well, I think it is leading. I think it is rather obvious.

Q. (By Mr. Morris) Insofar as the association of the pink colored portion of the tine with the yellow portion, though, is there a fixed point at the pivot pin so that the pink portion will pivot around the pivot pin? A. Yes. The pink portion, because of its attachment or connection to the hinged member shown in dark green, does pivot about the pivot pin and comes back to a stopped position, determined by the contact of the two faces of the pink and yellow members.

Q. And while the pivot pin might change its position in relation to the frame of the plow, insofar as the relation of the two parts of the tine, it would remain—would it remain constant? A. Yes. I think we could perhaps say that, as a similar illustration, if we were talking about the action of a door and a door hinge, if we happen to have a door—talking about a door on a railroad car, where the car [480] itself was in motion, but in which the car served as a fixed member with respect to the door and its hinge.

Q. All right. Do you find any language in the specifications of this patent which is particularly helpful in describing the operation which you have just explained? I wonder if you would look, in particular, on the second page of the specifications, the second column on that page, com-

mencing at about line 9. A. Yes, I have that portion marked in my book. "A tyne constructed according to my invention will operate similarly to the tynes previously constructed, that is to say the tyne may act as an ordinary spring tyne, flexing along the upper curved portion of the 'S' and also along the lower curved portion heretofore. When, however, a stone or other obstruction is encountered requiring an unusual amount of movement the main flexing need not be taken by the upper or the lower curved portions of the 'S', but can be taken by the upward swinging of the lower part 2 of the tyne about the pivot 3 with consequent compression of the springs 10. So soon as the obstruction has been passed the springs cause the two parts of the tyne to return to normal relative position."

Q. Now then, referring again to the list of mechanical elements as set out on the chart, Defendants' Exhibit 11, [481] which of those do you find present in the Traeger disclosure? A. All seven of them.

Q. Does that complete your explanation of the Traeger disclosure? A. I believe it does, unless you have any further question.

* * *

The Court: We will be in recess until 9:30 Monday morning.

(Adjournment.)

# United States Court of Appeals

FOR THE EIGHTH CIRCUIT.

---

## No. 17,441.

---

CIVIL.

---

JOHN DEERE COMPANY OF KANSAS CITY,
a Corporation and DEERE & COMPANY,
a Corporation,
*Appellants,*

vs.

WILLIAM T. GRAHAM, and GRAHAM PLOW, INC.,
*Appellees.*

---

APPEAL FROM THE DISTRICT COURT OF THE UNITED STATES
FOR THE WESTERN DISTRICT OF MISSOURI,
WESTERN DIVISION.

---

INDEX

Volume II


Clarence T. Fishleigh—

| | |
|---|---|
| Direct Examination (Continued) | 285 |
| Cross-Examination | 351 |
| Re-Direct Examination | 473 |
| Re-Cross-Examination | 493 |
| Re-Direct Examination | 503 |

Re-Cross-Examination ..... 506
Re-Direct Examination ..... 513
Re-Cross-Examination ..... 513

George Dwight Hunter—

Direct Examination ..... 515
Cross-Examination ..... 516

Plaintiff's Case in Rebuttal ..... 521

F. C. Fenton, Recalled—

Re-Direct Examination ..... 521
Re-Cross-Examination ..... 539
Re-Direct Examination ..... 570
Re-Cross-Examination ..... 573
Re-Direct Examination ..... 574

## Volume III—Exhibits

Plaintiffs' Exhibit A, Graham Patent No. 2,627,798 ..... 577
Plaintiffs' Exhibit K, Pamphlet of the Deere 900 Series ..... 589
Plaintiffs' Exhibit O, File Wrapper and Contents of Patent 2,739,518 Granted March 27, 1956, to Elmer A. Rolf ..... 593
Plaintiffs' Exhibit P, Soft Copy of the Rolf Patent No. 2,739,518 629
Plaintiffs' Exhibit Q, Opinion Letter of Judge Jos. B. Dooley, Order, Findings of Fact, Conclusions of Law and Judgment 633
Plaintiffs' Exhibit R, Sectional View of the 798 Clamp in the Static Position ..... 643
Plaintiffs' Exhibit S, 798 Clamp at the Full Deflection Position of the Spring ..... 645
Plaintiffs' Exhibit T, Showing Deflection of the Shank Between the Two Points of Support by Dotted Line Drawn Down Below the Bottom of the Shank and at Top of Shank 647
Plaintiffs' Exhibit U, Sectional View of the Changed 798 Clamp with the Hinged Member Inverted ..... 649
Plaintiffs' Exhibit V, Clamp under Stress Position and Fully Depressed ..... 651
Plaintiffs' Exhibit W, Dotted Line Showing the Flexing of the Shank ..... 653
Defendants' Exhibit 1-A, Colored Drawing of the Cockshutt Clamp ..... 655
Defendants' Exhibit 1-B, Colored Drawing of the Cockshutt Clamp ..... 657
Defendants' Exhibit 4, File History of the Patent 798 ..... 659
Defendants' Exhibit 5, Book of Prior Art Patents ..... 705
Defendants' Exhibit 7, Hypothetical General Claim ..... 795
Defendants' Exhibit 8A, Claim 1 from 798 File Wrapper ..... 796
Defendants' Exhibit 8D, Claim 7 from the 798 File History ..... 797

## Volume IV—Exhibits

Defendants' Exhibit 30, "No. 600 Tool Carrier Survey" by E. H. Lee, March, 1953, Product Research Department Copy ..... 799
Defendants' Exhibit 31, "No. 600 Tool Carrier Survey" by E. H. Lee, April, 1953, Product Research Department Copy 823
Defendants' Exhibit 32, Correspondence Produced During the Taking of Depositions of the Employees at Moline, Illinois, of Deere & Company ..... 844
Defendants' Exhibit 33-A, Drawing XCA-318-N ..... 877
Defendants' Exhibit 33-B, Drawing XCA-318 ..... 879
Defendants' Exhibit 34-A, Drawing Attached to Letter of October 23, 1953, Part of Correspondence with Exhibit 32 ..... 881
Defendants' Exhibit 34-B, Another Drawing Attached to Same Letter ..... 883
Defendants' Exhibit 38, Drawing XCL-134-N ..... 885
Defendants' Exhibit 39, Drawing XCL-135-N ..... 887
Defendants' Exhibit 41, Drawing Attached to Letter in Correspondence, Letter Being Dated December 8, 1953 ..... 889
Defendants' Exhibit 44, Copy of the Hunter Patent, No. 2,777,378 ..... 891
Defendants' Exhibit No. 45-A, Drawing of the Fixed Member 895
Defendants' Exhibit No. 45-B, Drawing of the Pivoted Member 897
Defendants' Exhibit 46, Drawing of Final Production Model of the 100 Series ..... 899
Defendants' Exhibit 52-A, Photograph of a Part of the Test Setup ..... 901
Defendants' Exhibit 52-B, Photograph of a Part of the Test Setup ..... 901
Defendants' Exhibit 52-C, Photograph of a Part of the Test Setup ..... 903
Defendants' Exhibit 52-D, Photograph of a Part of the Test Setup ..... 903
Defendants' Exhibit 53, Judge Dooley's Letter Opinion Dated September 9, 1953, in Civil Action No. 1469 in the United States District Court for the Northern District of Texas, Amarillo Division, Styled Jeoffroy Manufacturing, Inc., v. Graham ..... 905
Defendants' Exhibit 54, Judge Dooley's Letter Opinion to Counsel in the Same Case Dated December 18, 1953 ..... 916

[482] MORNING SESSION, MONDAY, MAY 7, 1962

CLARENCE T. FISHLEIGH, resumed the stand and testified further as follows:

Direct Examination (Continued) by Mr. Morris.

Q. Mr. Fishleigh, at the close of testimony on Friday of last week, I believe we had just completed an explanation of the disclosure of the Traeger patent. I wonder if you would now turn to the Petersen patent, which is another example of the prior art set out on the chart, Defendants' Exhibit 11, and explain that disclosure, please.

First, I would like to call the Court's attention to the official translation of the Petersen patent which is contained in the book of prior art that you have. Throughout that patent there is a word shown as horseshoe which undoubtedly was intended to be horse hoe. The translation inserted an "s" that obviously wasn't intended to be there, so I have marked through the letter "s" wherever that appears throughout the translation.

Go ahead, please, Mr. Fishleigh.

A. The reproduction of the Petersen drawing from the Danish patent 57,391 is shown in the lower left-hand [483] corner of the chart, Defendants' Exhibit 11. In addition to that there is on the easel a colored enlargement of that same figure, in fact, of the entire sheet of drawings from the Petersen patent, marked for identification as Defendants' Exhibit 16. As has just been pointed out, this device is a resilient mounting means for what the patent describes as a horse hoe, undoubtedly meaning a hoe or cultivator type structure drawn by a horse. Looking at Defendants' Exhibit 16 beneath there is a frame, Fig. 3 colored in violet. That is a transverse member of the frame of the device upon which the horse hoe and hoe member is being mounted.

Attached to that frame member 3 is a fixed member consisting of two parts, both of which are colored yellow in this colored enlargement, and it consists of the parts—primarily of the part 4 but also includes the plate 13

which is fastened to and clamps the fixed member 4 to the frame member by means of the bolts 14 and the nuts 15.

The sides of that member 4 extend to the left as we see it in this figure and provide a channel shaped member or opening or way into which the shank and the hinged member are mounted. There is a pivot pin 16, colored light blue, which extends from the [484] flange on one side to the flange on the other side. That is one which would be behind the showing as it appears in this drawing.

Mounted upon that pivot pin is a hinged member 2 or shank attaching member, and that structure is colored green, in part dark green and in part light green. That hinged member extends in a substantially vertical direction, as shown in this joint, and as a longitudinally or vertically extending face on its left side. Also it has members extending to the side marked 7, such that it provides a way or channel shaped portion or opening into which the shank of the tool, 1, is positioned. And I might say that the numeral 8 points out the side of the fixed member, the flange and one side of it, and there is a similar one on the other side. The shank 1 is positioned against the hinged member with the right-hand face of the shank against the left-hand face of the plate-like portion of the hinged member into substantially a continuous contact.

The fastening for the shank consists of a stirrup member plus a bolt, the stirrup member being numbered 5 and the bolt 6. In other words, the shank is inserted through the opening in the stirrup member and then the bolt is tightened down so as to press the [485] shank against the vertically extending face of the hinged member 2.

Then there is a compression type spring, number 9, which is positioned between the fixed member and the right-hand side of the hinged member 2, as shown here, and is colored orange. On the surface of the hinged member there is a little boss that positions that spring, and out operating through the boss on the fixed member is a screw 11 with a lock nut 10 for adjusting the tension of that spring. In other words, if the bolt 11 is screwed in so as to move its end to the left, as shown in this figure,

the spring will be compressed and will exert a greater pressure upon the hinged member, and will resist any movement of the shank with a greater force.

There is in addition a member or a portion of the fixed member 4 marked 18, which provides on its left-hand surface a stop surface or stop member, and the contour or shape of the hinged member 2, the dark green member, is such that there is a portion 17 referred to in the translation of the Petersen patent as a beak, 17, because of its perhaps similarity in shape to the beak of some bird or animal, and the arrangement is such that as the pressure of the spring is exerted upon the member 2 it tends to pivot in a [486] counterclockwise direction as we see it in this figure until the surface of the beak or portion 17 of the hinged member comes in contact with the surface of that portion 18 of the fixed member, and those two surfaces, in meeting, exert or provide a stop so that the hinged member and the shank are positioned in the proper operating position for the tool. In this instance the tool or carriage is moved. Cultivator is moved from left to right as we see it in this view, so that in case an obstruction is encountered the bottom portion of the shank 1 would be moved to the left and upward, and that movement would be resisted by the spring action, that is, the action of the spring 9. But when the obstruction has been passed the additional energy stored in the spring 9 would move the hinged member and the shank back until the surfaces 17 and 18 contacted, thereby again positioning the tool in its proper operating position or in that position which has been referred to here as the home base position for the device.

Q. Mr. Fishleigh, would you point out there on the drawing how it is that the beak member clears the portion 18 of the fixed member as the shank and the pivoted member start to pivot. A. Well, as I run my points from the center of the pivot [487] member to the surface 18, I find that the surface 17 is entirely below a line from the center of the pivot point perpendicular to the surface 18, so that as the hinged member starts to rotate in a clockwise fashion as it would if an obstruction was encountered, all portions of the surface 17 moving in an arc about the center of the pivot point move away from that surface 18.

Q. In the Petersen disclosure, Mr. Fishleigh, how many of the mechanical elements as set out on the chart, Defendants' Exhibit 11, do you find in the Petersen disclosure? A. All seven of the elements as set forth on the chart, Defendants' Exhibit 11, are present in the Petersen structure.

Q. Now, I notice in the element 7, as it is set out on the chart, which is the spring means, as it is set out there is there any particular mention of the spring rod element which we find in some of the structures of the art? A. No, not specifically. In this instance, as indicated by the color, I have referred to the spring means broadly as including the actual spring itself and the means for connecting it in operative position.

Q. Now then, in the Petersen structure, is there a rod [488] element, as such, or does the spring operate in some other fashion? A. Well, there is no rod which extends through from one end to the other of the spring. There is a boss colored brown near the upper end of the hinged member 2, and then at the other end there is just a flat, seemingly washer-type device against which the screw 11 bears, so that being a short enough spring apparently it is contemplated that the spring itself will maintain itself in proper position without the necessity for a rod to keep it in proper alignment.

Q. The brown portion on the hinge member 2 which you have referred to as a boss, and then the brown portion on the fixed member, which is the bolt and lock nut, do those elements act to position the spring in this particular structure? A. They act to position it and also serve that function of the rods and nuts and washer in some of the other structures we have considered of varying the pressure or force upon the spring in its normal operating position.

Q. For example, in Graham 811, which has previously been considered, if we wanted to vary the tension on this spring how would that be done? A. You would simply tighten the nut at the top to vary— [489] really in that instance I would think we would more properly say vary the compression of the spring.

Q. All right. And in the Petersen structure how is the spring tension adjusted? A. By tightening the bolt or screw 11.

Q. Just one other thing about Petersen, Mr. Fishleigh. The element 6 which you have described as a bolt that goes into the hinge member through the stirrup or loop element, is that a bolt of the kind which goes all the way through the hinge member and the shank to fasten in the way that we have seen some of these other bolts, or does it operate as a set screw? A. No, it does not go all the way through. That bolt stops at the surface of the shank, and as it is tightened, screwed into the threaded opening in the portion 5 it simply exerts a pressure tending to push the shank against the other surface of the hinged member 2. One thing which I perhaps did not point out in my general explanation, and that is that the member 2, that is, the vertically extending plate-like portion of the member 2 is in this structure between the shank and the fixed member.

Q. Now then, just one other little point there. We have observed previously here last week a Jeoffroy type hinge member, which is identified as Plaintiff's Exhibit [490] D-1, which has in it at the rear a set screw passing through the loop or stirrup element and contacting the shank. Would that set screw in this Jeoffroy device operate substantially in the same way as the set screw in the Petersen structure or the bolt 6 in the Petersen structure as you have described it there? A. That is correct. It is the same general type of operation.

The Court: That is used solely to hold the shank?

Mr. Morris: To hold the shank onto the pivoted member, attach it to the pivoted member.

Q. (By Mr. Morris) Mr. Fishleigh, I would like you now to turn your attention to the Glencoe prior art device, which is shown on the chart, Defendants' Exhibit 11, and also shown on the colored enlargement of Glencoe drawings, Defendants' Exhibit 17. Before you start your discussion, in connection with the charts which are on the easel, I would also like for us to consider the Glencoe device, which has been marked as Defendants' Exhibit 3 and is in pursuant to the stipulation, Your Honor.

Now first I would like to ask you whether or not the drawings of the Glencoe structure which are [491] enlarged and colored here have been made under your supervision, in your office, to reflect the structure of the Glencoe clamp as shown in the physical exhibit, Defendants' Exhibit 3. A. Yes, those two drawings, that is, the originals of which these are photostatic reproductions, were made in my office under my immediate direction and supervision and using this structure, Defendants' Exhibit 3, as a base from which to work.

Q. All right. Now then, using the drawings and the clamp itself whenever necessary, would you please explain the structure and functioning of the Glencoe device. A. The smaller reproduction of the two figures of Glencoe are shown in the bottom row of figures on chart, Defendants' Exhibit 11, next to the right-hand end, that is, Traeger is at the right-hand end and these drawings are next to that.

Referring to the larger drawings, Defendants' Exhibit 17, this Glencoe prior public use structure is a structure for use as a chisel plow for plowing operations and the body of the plow or frame of the plow, as shown here, includes a transverse extending beam member marked "C" and colored violet. It is an angle iron type of device in this particular structure.

There is then a member 10 colored yellow, [492] which is fastened to the two flanges of that angle iron member by means of a pair of bolts, also colored yellow but not numbered on these drawings. The fixed member has a pair of side portions numbered 6, which form a channel-shaped opening or way into which the hinged member and the shank project and are supported and kept in position. At the bottom of those two side members are what could well be called downwardly projecting ears and those two ears have a hole 7 into which a pivot pin 8 is positioned, that pivot pin in the drawings, as in previous drawings, being colored light blue, and it is retained in its position by cotter keys at either end.

Then there is a pivoted member, marked 21, which also has a boss or ear portion and a hole mating with the pivot pin 8, so that that member 21 can rotate in a clockwise or counterclockwise direction about the pivot pin 8.

The upper portion of that hinged member or shank attaching member has a flat longitudinal surface extending in its left-hand end well past the pivot point close to the—well, about two-thirds of the way toward the far end of the hinged member, and the shank of the tool, marked 18, is carried upon that—that is, the upper forward end is carried upon that [493] flat longitudinal surface with the lower surface of the shank, of that portion of the shank, in relatively intimate contact with the upper surface of the hinged member. The shank is fastened to and supported upon this hinged member by two means, 1, a screw 32, colored light green, passing through a hole in the shank relatively close to its forward end, that is, the right-hand end as it appears in these drawings. In addition to that there is a stirrup 29, which extends upwardly and over from side to side of the rear or left-hand end of the hinged member 21. The shank is inserted through that stirrup member into proper position and then the bolt 32 is inserted to fasten the shank member to the hinged member. Projecting downwardly from the portion of the fixed member and extending into that opening or way between the two side flanges 6 of the fixed member is a projection or boss, unnumbered in this drawing but shown in cross section and colored yellow, as is the rest of the fixed member. Extending upwardly from the upper surface of the longitudinally extending face of the hinged member at a point slightly forward or to the right of the end of the shank, as it is shown in Fig. 2 on Defendants' Exhibit 17, is an upwardly extending boss marked 36 and colored dark green. The arrangement is such that [494] those two bosses contact each other as the right-hand end of the hinged member is pulled upwardly by spring action, which I will refer to in a moment or so, and the hinged member and the shank and the tool are thereby positioned in proper operating position to start the operation. At the front end of the fixed member and at the upper portion thereof there is a bearing support 11 on either side of the fixed member, which provides a pivotal support for a spring supporting bracket 13. In other words, 13 pivots about the pivot pin 12, that pivot pin being integral with the part 13 and pivots in the seat 11 or seats 11 at opposite sides. A spring—in fact in this instance a pair of springs, 17 and 17-A, colored

orange, one smaller than the other, and telescoped one over the other, they both seat a cavity in the upper portion of this seat member 13. Then there is a spring rod that extends through the spring and at its lower end extends through an opening in the forward end of the pivoted member and there is held by means of its head and a washer. At the upper end is another washer marked 18 and a nut unnumbered which serves to adjust the tension or compression which is desired upon the spring members, so that once adjusted the [495] springs tend to lift the right-hand end of the hinged member and rotate that hinged member in a counterclockwise direction, which is done until such time as the lug 36 on the hinged member encounters—that is, the upper surface, upper part of that lug 36, encounters the bottom of the lug on the fixed member, unnumbered but immediately above the lug 36, as is shown in Fig. 2. At that point, as I have indicated, the tool is in proper operating position with the point of the tool at such position as is desired for satisfactory operation.

The amount of compression which is desired in the springs is then obtained by tightening up the nut and the washer 18 to give a steady operation under such normal loads as may be desired, but leaving the device so that if an obstruction is encountered in the use of the tool the tool 20 will move upwardly and backwardly, pivoting about the pivot pin 8, and at the same time pulling down the right-hand end of the hinged member against the resistance of the spring, and thereby at the same time storing additional energy in that pair of springs.

Once the obstruction has been cleared and the tool is relatively free to move back to its normal operating position, the force of the springs pulls the left-hand end up, rotating the hinged member and the [496] shank in a counterclockwise direction until once more the lug 36 encounters the bottom of the corresponding lug on the fixed member and the tool is positioned again in its home base or normal operating conditions.

Q. Now then, Mr. Fishleigh, would you step here to the table just a moment where we have a Glencoe clamp, Defendants' Exhibit 3, and let's for purposes of demonstration remove the nut and washer at the top and remove

the two springs so that we may demonstrate the pivotal action of this device. A. Well, the spring tends to hold what—may we turn it around so that as we look at it it is in the same position as the drawings. The spring tends to pull the fixed member and shank in a counterclockwise direction—

Q. You mean the pivoted member and shank? A. Yes, the hinged member or shank attaching member and shank in a counterclockwise direction and does move the device until this lug 36 upon the hinged member encounters the lug on the fixed member, and it is there held. When and if the tool hits an obstruction it will tend to rotate the hinged member and shank in a clockwise direction, pulling down upon the right-hand end and compressing the springs into some such position as I am now holding it, with the lug 36 separated from [497] the mating lug on the fixed member. That condition persists until such time as the obstruction is cleared when the force on the tool end is released and the spring pressure takes over again, pulling the device in a counterclockwise direction about the pivot point or pivot pin 8 until the two stop members again engage in the proper operating position.

Now, if I may I would like to take the hinged member loose. Now, referring to the hinged member and again looking at it in the same orientation as we have in Figs. 1 and 2 on Defendants' Exhibit 17, it will be noted that there is a long, longitudinally extending plate member with a sizeable longitudinal face on its upper end. The shank has been inserted through the stirrup member 29 with a degree of clearance, of course, in order to get it through, because in normal manufacturing tolerances there is a variation in the thickness of a shank of this sort, and of course some degree of variation or tolerance in providing a stirrup of this sort. Then toward the rear of the shank and to the rear of the pivot—may I start over. Toward what is in operating position the front of the shank and in front of the pivot pin there is a bolt marked both on the model and in the drawings 32, which extends through a hole in the pivoted [498] member and through a hole in the shank and serves to clamp the shank to the pivoted member, and as I have now disassembled the device, but

in assembly the front upper end of the shank is pushed through the stirrup and into position so that the bolt hole in the hinged member and in the shank mate and then the bolt is attached and tightened up to provide a clamping arrangement, and the two together serve to hold the shank in close contact and to prevent any substantial movement of the shank away from the hinged member, and of course there is a hole with sort of—sort of an elongated hole with a hole in the spring for the spring bolt, the elongated or tapered formation being such to prevent interference—well, as this stands there and as that moves (demonstrating) there is relative movement between the spring rod and the hinged member.

Q. Now then, one other thing, Mr. Fishleigh, I would like for you to point out on this particular model. You have mentioned the spring seat being mounted upon the forward projection of the main body of the clamp or fixed part of the clamp. Will you point out on the model a forward projection which mounts the spring seat. A. Yes, the upper and forward projection does provide [499] a seat, a pivotal seat on the drawing Fig. 1 on Defendants' Exhibit 11, and this spring seat has a hole through it for the rod. It has a cavity on its upper surface for the bottom of the springs and then a pivoting shank portion marked 12, both on the model and on the drawing, which mates or pivots in the seat and permits a rocking movement of that spring seat to adopt it to changes in position as the hinged member moves in a clockwise or counterclockwise direction about the pivot pin 8.

Q. To demonstrate that rocking movement of the spring seat a little more fully, Mr. Fishleigh, as the spring rod extends upwardly through the device in operating position, as the shank and pivoted member pivot, is the line of spring, in relation to the other parts, changed? A. Yes. If I may just illustrate with my fingers, and in an extreme condition, although the actions are the same, as this representing the hinged member with my fingers as it pivots about the pivot pin, the bottom of the spring rod would move downwardly and to the left as we see it in Figs. 1 and 2. In other words, as the hinged member pivots about the pivot point, the movement of this head 16 is not only

down but to the left as the hole or the end of the hinged [500] member moves in the arc of a circle.

Q. Now, considering the Glencoe structure as shown in the drawings, and as shown in the actual clamp, Defendants' Exhibit 3, which of the elements as set forth on the chart, Defendants' Exhibit 11, do you find present in that structure? A. I find each of the seven elements present in the Glencoe structure.

Q. Mr. Fishleigh, I notice that here in the various structures we have considered during the past several days, we have noted various types of plow frame beam members, including a square bar, such as in the Deere 650, an I-beam type as in the Graham 811, and a square tubular type beam, as in the Deere 100, and you have pointed out that in Glencoe here the frame member—the plow frame member is of an angle iron type. Are all of those common steel or iron forms available in ordinary commerce? A. Yes. They are all standard steel forms which can normally be purchased in various sizes and various strengths, that is. various sizes, for instance, of the angle as we see it here and various thicknesses of the flange, depending upon the particular purpose for which it is required.

Q. And would that be true of all of the different types [501] of frame members or forms? A. Yes. All of those, at least, that we have considered here.

Q. All right. I see we have one further segment of prior art, or further prior use, demonstrated or contained on the chart, Defendants' Exhibit 11—

The Court: Before we go into that I would like to ask a question relative to the Glencoe device.

Is this a patented device?

Mr. Morris: Yes, Your Honor, there are two patents in existence on variations of the form as demonstrated here, and then there is a third patent on a later design of the same Glencoe structure.

The Court: That patent was prior to the 811 patent?

Mr. Morris: No, sir, the 811 structure antedates the Glencoe.

The Court: Glencoe antedates 798?

Mr. Morris: Glencoe antedates 798.

Mr. Fishburn: If Your Honor please, I would like to make one statement with respect to that. The application for the patents for this Glencoe device were filed after the filing date of the 798 patent. That might become important later, but Mr. Morris made the broad statement that the Glencoe was prior to 798. [502] We admit that it was used prior, over a year prior to the filing of the 798 patent. That is all we admit.

Mr. Morris: That is entirely acceptable, Mr. Fishburn. I don't want to misrepresent the chronology in any way whatsoever. Your Honor, I think the record will be clear that the Glencoe structure itself antedates the 798 patent, and the 798 application date. We do not contend that any of the Glencoe patents, either the issuance of them or the filing dates of the applications, precede the 798 filing date. We don't regard that as of any importance. Does that answer the Court's inquiry in full?

The Court: Yes.

Q. (By Mr. Morris) Now then, Mr. Fishleigh, I would like to turn to a consideration of the Jeoffroy SC-580 prior use structure as shown on the chart, Defendants' Exhibit 11. Do you have enlargements of the drawings of that structure? A. Yes, I have an enlargement of three figures of that structure, which I have just placed on the easel, and which sheet of drawings is marked Defendants' Exhibit 18.

Q. Now then, have you also considered and studied the Jeoffroy SC-580 clamp as shown here and marked Defendants' Exhibit 2, which is covered by the stipulation? A. Yes, I have considered it.

[503] Q. Have the drawings as shown on the colored enlargement, Defendants' Exhibit 18, and as shown on the upper right-hand corner of Defendants' Exhibit 11, been made under your supervision in your office, using the actual Jeoffroy SC-580 clamp as a guide, or as the device could be drawn? A. That is correct. We started with a drawing from one of the preceding cases and added to that and modified it to wherever it seems desirable to make it more precisely conform to the clamp, Defendants' Exhibit 2.

Q. Are the drawings of the Jeoffroy SC-580 structure substantially in accordance with the actual Jeoffroy de-

vice, Defendants' Exhibit 2? A. Yes, I believe they are. I have checked them and they are certainly insofar as any features of importance here are concerned.

Q. All right. Taking the drawings and the actual device wherever necessary, will you please explain the structure and operation of the Jeoffroy SC-580 prior use clamp. A. The Jeoffroy SC-580 drawings appear upon the chart, Defendants' Exhibit 11, at the upper right-hand corner of the chart. Referring to Defendants' Exhibit 18, we find in this instance that this particular structure has been designed for use upon what is referred to [504] as an I-beam, sometimes called an H-beam, marked number 1 on these drawings and colored in violet. In this particular instance, at least, the structure is used in the form where the name I-beam would be most natural because it looks like a capital I, as we see it.

There is a fixed member colored in yellow and including those parts numbered 3, 4, 5 and 6 on this chart, being a two-piece fixed member, the lower part, part 3, having a flange which comes up over the lower front flange of the frame cross member or transverse member, and then an additional member 4 having a brace 5 which extends over the opposite flange, opposite side of the lower flange of the I-beam, and the two are fastened together by means of the bolts 6 to clamp the device upon the frame member. As shown, the portion of the fixed member which now remains attached to the other parts is the portion marked 3, and the part which we have removed is the clamping part 4 with the brace member 5 and the two bolts, one on either side of the bolts 6, as indicated in the drawing.

At the rear end of the fixed portion 3, or the portion 3 of the fixed member, are a pair of downwardly projecting ears, one on either side of the structure, those ears together with the [505] portion, part of the frame marked 3, serving to provide the sides of a channel shaped opening or way into which the shank 2 and the pivoted member to be described later project. Those ear portions are marked 26 and 27 and they serve to provide a bearing point for a transverse pivot pin 7, colored in light blue.

There is a shank attaching or hinged member marked generally as 8 and colored in green, and that has a lug or projection at the back end—

Q. The back end? Excuse me. Go ahead. I wasn't seeing it. A. —at the rear end of it as it is mounted in the plow, with a hole through and so arranged as to fit upon and pivot upon the pivot pin 7. It also has on the upper surface a longitudinally extending face marked 59 upon the upper surface of the longitudinally extending plate portion of substantial width as shown here in Fig. 3, and extending from a point above the pivot pin over almost to the—well, extending to the right-hand or forward end, except as interrupted by a boss to be referred to later.

The shank 2 is mounted upon the top of the hinged member and it has a lower face which corresponds to and is in contact with, in its normal position, with the upper face of the hinged member.

Now, the mounting means or attaching means [506] differs here from those we have seen in some instances, at least, before, is more of the general nature of the 811. There is on the upper surface of the hinged member 8 a boss unnumbered but colored dark green and to which I am pointing at the right-hand end in Fig. 2, and in the shank 2 in a position corresponding to the other boss, there is a depression, as I am not pointing to it in the shank, such that in normal position as shown in Fig. 2 the boss on the hinged member extends up into the depression on the shank and prevents any substantial longitudinal movement to the right or to the left or, for that matter, sidewise as shown here in Fig. 2 of these drawings.

Q. Taking the Jeoffroy device here, Mr. Fishleigh, will you demonstrate those lugs and recesses to the Court so that— A. Yes, the lug that I was referring to is the one I am now pointing to on the hinged member, and there is a depression up into the shank which mates—of course the position is different but the mating is the same, and while there is a degree of movement permitted, that movement is restricted or limited as to how far it can go.

Now, while we have the device open there is— [507] opposite the depression in the shank there is a boss on the shank, and that is the one shown in pink and projecting up immediately above the depression toward the right-hand end of the shank in Fig. 2 on Defendants' Exhibit 18. Then as also shown in the joint, Fig. 2, there is

a depression in the bottom of the fixed member in a mating location as to this boss on the shank, and that is the hole to which I am now pointing at the end of the—toward the right-hand end of the fixed member as we see it in Fig. 2 on Defendants' Exhibit 18, and it likewise limits the amount of movement. So when we put them into position, in its operating position, the entire structure is retained in substantially normal operating condition.

Now, the hinged member, as we have noted perhaps in that model, is somewhat T-shaped, it has an extension to the right and left towards its front end or the right-hand end. That is shown here in Fig. 1, and a pair of spring bolts extends through holes in that T-shaped member and come up alongside of the shank and up through holes, corresponding holes in the—corresponding but slotted holes in the fixed member, and then up through a pair of coil springs. Now, those coil springs seat as shown here in Fig. 2 in seating locations upon the upper part of the fixed member, [508] and at the upper end of course there are the usual washers 10 and nuts 11 which can be adjusted to provide any degree of compression that is desired upon those springs.

Q. Mr. Fishleigh, I notice in this Jeoffroy SC-580 structure we have a washer formed in a manner to mate the upper end of the spring, and that on the fixed member we have a seat likewise formed in a manner to mate with the lower end spring. We have noticed that same type of thing in other devices here, such as the Graham 811, the Deere structure, and so on. Is that type of molding or form of the casting a more or less common thing in modern manufacture? A. Well, it has been for some time. There are two ways of treating a coil spring of this sort for a purpose of this general type. One is to grind off the end of it so that it is smooth and will seat upon a smooth surface. The other is to leave the end as it would be coiled, as it would come out when it is coiled, and just cut the wire or rod off, as in the case of this Jeoffroy spring that I am holding. Now, in case you do do that, and there is some advantage in it, if you do that then it doesn't provide a good seat on a flat surface, so that they simply make a washer, wherever the seat is, they make it of such a form to convert to a [509] flat

bearing surface. Both of those I have known for—well, more years, I guess, than I like to remember.

The Court: I would like to ask a question on this device, the Jeoffroy device. It appears to me that the shank might bounce loose after it hit an obstruction there and is pulled down clockwise, and then the obstruction disposed of and the pressures taken off of the end of the tool. Of course these springs would bounce back up, but this shank being loosely positioned in there could have some tendency to bounce around and not get back in the recess provided for it on the fixed frame.

Mr. Morris: Would you like to direct your question to Mr. Fishleigh, Your Honor, or to me? I have some information about that personally, but perhaps it would be best to have Mr. Fishleigh's view about it.

A. I think unquestionably there is the possibility of that type of action. I have felt that about it myself. However, it is my understanding from those that I have seen and worked with that as a matter of fact while there is a force coming back, tending to pull the shank down in a way that would pull it loose here from the pivoted member or shank attaching member, that the balance of forces is such that the greater force is on the part of the springs because they have encountered and been [510] compressed as much as the plow went up or the tool went up, and that in all cases that I have encountered at least, although I have wondered how it happened or that it would happen, it does come back and the shank and the hinged member stay at least substantially together so that they don't jump loose at that point.

Mr. Morris: As a matter of factual information, without intending to testify at all, Your Honor, I think it is true that upon occasions in extreme circumstances it has bounced loose, and in that type of a situation the shank would pull rearwardly until the upstanding lug on the top of the shank came into a binding position here at the rear where it would hold in. But of course it would not be operative, not be intended to operate in that position, although, as Mr. Fishleigh says, that is an unusual circumstance.

Q. Has that completed your explanation of the Jeoffroy SC-580 structure, Mr. Fishleigh? A. I don't think completely.

Q. I believe there is another item or two that you need to mention. A. On the lower forward portion of the fixed member, as the upper part of the ways formed by the flanges at the two sides, there is a surface which has been marked 15 in these drawings, and that is the surface to which [511] I am now pointing on the model. It is a surface a little larger and a little wider than the shank and approximately square, about as long as it is wide, and on the upper surface of the shank there is a mating or contacting surface. That is the surface which has been colored red on the top of the shank, in Fig. 1, and the corresponding surface, that is, the end of it, which is all we see, surface 15, on the bottom surface of the fixed member in Fig. 1. Then in Fig. 2 we have colored just on the cross section of it the two surfaces which do contact over that area, and the arrangement is such that when the springs are tightened down in the initial setting of the device the shank is pulled up until its upper surface contacts with the bottom surface of the fixed member, and in that way the shank and its operating tool are positioned in normal operating position.

Then if an obstruction is encountered and the device is forced up to a position such as shown in Fig. 1, in which the hinged member has rotated about the pivot 7 and the shank has moved with it, as soon as the obstruction has been passed and the end of the tool released the springs tend to move the shank and the hinged member back until such time as those two surfaces, the one on the upper part of the shank and [512] the one on the lower part of the fixed member, come in contact and act as stop members to again position the tool in proper operating position.

Q. Mr. Fishleigh, is that stop construction there with the upper face of the shank contacting an underface of the fixed member quite similar to the stop arrangement provided in the old Graham 811 structure? A. Yes, quite similar.

Q. Would the contacting faces in the old 811 structure be somewhat greater surfaces? A. Yes.

Q. I wonder if that is shown on any of the drawings which we have already presented in evidence here? A. Yes, I have Defendants' Exhibit 14-C.

Q. That is the colored enlargement? A. Of sheet 3 of the 811 drawings, and it will be noticed that the extent of the red portion on the top of the shank is somewhat greater than the extent of the red portion on the top of the shank in Fig. 1 of Jeoffroy SC-580 structure, as shown on Defendants' Exhibit 18, and while not shown specifically here, the extent of the surface which contacts the shank in this 811 structure is coextensive with the red portion here on the top of the shank.

Q. That is, there is an undersurface or underface of the [513] fixed member which would correspond substantially with the area that you have marked red there on the top of the shank element? A. That is right.

Q. All right. Now, Mr. Fishleigh, considering the mechanical elements as set out on the chart, Defendants' Exhibit 11, which of those mechanical elements do you find present in the Jeoffroy SC-580 structure? A. I find all of them except the sixth one, the sixth one being the means for connecting the shank to the pivoted shank attaching member.

Q. Why is it that you have concluded that that element 6, that structural or mechanical element 6, is not present in Jeoffroy SC-580? A. Well, because of the floating arrangement, which we have just been discussing, which permits the shank to move under varying conditions and varying amounts relative to the hinged member.

Q. Is it your opinion that in the Jeoffroy structure there is not really a fastening means in the sense that it has been used as a mechanical element here on the chart, Defendants' Exhibit 11? A. That is correct. That is my view, that it is not, such a fastening means is not present in the Jeoffroy SC-580.

[514] Q. And is that the same type of thing which we have discussed in connection with 811, where you concluded that the fastening means was not present? A. That is correct.

Q. Now, Mr. Fishleigh, in the re-direct examination of Mr. Fenton a day or two ago some point was made as

to a consideration of mechanical elements, item by item, or additional associated parts held in the hand or laying upon the table, as we now have this group of disassembled structures here that we have been discussing. But in your consideration of the prior art that we have just discussed, and in particular the consideration of mechanical elements as they are set out on the chart, Defendants' Exhibit 11, have those various mechanical elements been considered just one by one in isolation, or have they been considered in their proper association, as disclosed in the prior art structures and in the environment disclosed there? A. They have not been considered as isolated elements one by one. In fact, if so considered the field would be inexhaustible. But they have been considered here in an environment which is closely similar to and in some instances, in my opinion, identical to the environment in which those similar elements find themselves or are found in the structure defined by the [515] mechanical elements of the claims in the 798 patent.

Q. Thank you. Now. Mr. Fishleigh, I would like to turn our attention to a consideration of the mechanical elements as defined or as set out in the claims of the 798 patent.

* * *

Mr. Morris: * * * I would like to present in evidence some colored enlargements from that patent, and I believe the Court already has them on the desk. They have been marked as Defendants' Exhibits 21-A, B, C and D, and Mr. Fishburn—you have been handed copies [516] of those?

Mr. Fishburn: Yes.

The Court: Yes, here they are.

Mr. Morris: I would merely like to get them in evidence at this point because we will refer to them later on and they have a color scheme which is somewhat different than the color scheme that was used by Mr. Fenton on his charts earlier in the case.

(Defendants' Exhibits 21-A, 21-B, 21-C and 21-D were received in evidence.)

Q. (By Mr. Morris) Mr. Fishleigh, there is one other point I would like to inquire about on the prior art before

turning to the claims. Of the prior art disclosures that we have just discussed there on Defendants' Exhibit 11, how many of them do you find with a fastening means consisting of a bolt and a loop or stirrup element for maintaining the shank and the pivoted member in their associated relationship? A. There are two of them in that category, sir.

Q. Which are they, please? A. The Rix patent 287,965, the Cobb patent, 284,278, and the Glencoe prior use structure.

Q. All right. Now then, which of those were cited by the Patent Office insofar as the file wrapper history of this patent reflects? The patent itself and the history? [517] A. Well, none of them.

* * *

Q. Now I believe there is another item here also which I was about to overlook that I want to take up before turning to the 798 mechanical elements as such. Have you prepared any further charts, Mr. Fishleigh, to demonstrate any other aspects of the mechanical elements or other aspects of the structure of the 798 clamp as shown by the prior art? A. Yes.

Q. Do you find in the prior art specifically means for attaching the shank of a ground working tool to a pivoted shank attaching member? A. Yes, I do.

Q. Have you prepared a chart to specifically point out those items? A. Yes.

[518] Q. And demonstrate them? A. Yes.

Q. Will you place that chart on the easel, please, sir. A. That chart has been marked for identification as Defendants' Exhibit 19.

* * *

Q. (By Mr. Morris) Now then, I see of course that that includes elements from the prior art that have already been discussed, or segments from the prior art that have already been discussed, and I wish you would make your explanation here just as brief as possible, Mr. Fishleigh, to point out this particular item or element, the fastening means.

Go ahead, please. A. In the upper left of the chart is the same picture of Dunbar that we saw in connection with Defendants' Exhibit 11, but only certain of the colors used here, and the fastening means, that is, the means for connecting the shank to the shank attaching member is shown in light green and consists of the bolt "g" and a washer and a nut unnumbered, in this instance just the single bolt, but it is supported by the width of the pivoted member on the one hand and the width of the end of the spring member and the washer [519] "E" on the other end.

The second one, the central one at the top of the chart, is a patent to Carter, 231,268, that was not previously discussed and I don't believe needs any great detail here other than to say that the end, the left-hand end of the shank as we see it in this Fig. 1 from the Carter patent, is placed in between the two side flanges of a member "G" as shown in Fig. 2 of this patent, and then through a bolt colored light green and not numbered or lettered in this view, those flanges are pulled together and grip the sides of the shank member to hold it or fasten it to this member "G", which is the pivoted shank attaching member, pivoting about the pivot "L" not shown in Fig. 1, but occurring up about the upper left-hand portion of the shank attaching member, as I am now pointing to it in Fig. 1, and the spring there is a little different form of spring but connected by a rod to the pin member "F" so that any tendency to pivot or rotate about this pivot point "L" is resisted by the tension of the spring.

The next structure is Cobb, which appears just above it now in Defendants' Exhibit 11, and all we need to say there is that there is in this structure a shank attaching member with a stirrup "v" at its [520] lower end through which the shank is inserted, and then bolted to the pivoted member by means of the unnumbered but light green colored bolt toward the upper end of the shank. That is quite similar in its general arrangement there to the arrangement that we described in more detail in connection with Glencoe.

Rix, as previously pointed out has a pivoted member colored dark green in these figures, it has a stirrup member

at its bottom end close to the pivot point and toward the top of the shank a bolt numbered "e" in these drawings, and passes through a hole in the shank and a hole in the pivoted member.

Glencoe we have just discussed, and it also has a pivoted member with a loop or stirrup at its left-hand end as we see it in Fig. 2 here, and a bolt passing through the shank toward the right-hand end of the shank and through the fixed member so that in both of these last two situations—in fact, in the last three that I have discussed—we have the arrangement of a pivoted member with a stirrup on it, such a stirrup plus an additional bolt holds the shank connected to or attached to the pivoted member.

Q. Then briefly Traeger and Petersen, please. A. Traeger, as shown in Fig. 3 on this chart, has a rivet passing through the hinged member colored dark green, [521] and the shank member colored pink to hold the two together, and up in Petersen, as previously pointed out, there is a stirrup attached to the hinged member, the shank passes through that and then is held in position by means of the bolt 6 operating in the nature of a set screw, and in the nature of the set screw that we saw in one of the Jeoffroy structures a few moments ago.

The Court: Is there a bolt on the Traeger device?

Mr. Morris: A rivet, Your Honor, rather than a bolt, I believe.

A. It is the light green 6.

The Court: The light green projection there?

A. Yes, it is 6. The number only runs to it in its tilted position, but it is the member colored light green and is in the nature of a rivet fastening the two together.

Q. In the group which you have set out on that chart and just discussed, Mr. Fishleigh, are the fastening means or the connecting means which connect the shank and the pivoted member together so arranged that in the pivotal function or pivotal operation of the device the shank and the riveted member operate together about a single pivot pin or pivot point? [522] A. Yes, that is the intention, that they so operate as long as they stay in their proper position.

Q. As long as they stay fastened together? A. That is correct.

Q. Now then, I would like to consider one other aspect of the prior art structure very briefly, Mr. Fishleigh, before turning to 798 specifically. Do you find in the prior art patents and use devices which preceded 798 examples in which the shank attaching member is located in a position between the shank and the fixed part of the clamp? A. Yes, I do.

Q. Have you prepared a further chart to demonstrate that particular association of the parts in the prior art? A. Yes.

Q. Will you place that on the easel, please.

That chart is marked Defendants' Exhibit 20, is it not? A. That is correct.

Q. Will you very briefly explain those structures from this limited standpoint we have just mentioned. A. Yes. In the Dunbar structure, shown in the upper left, that being the Dunbar patent 211,003, we have colored the fixed member in yellow, the hinged member in dark green, and the shank in pink, in conformity with [523] our general color scheme, and it will be noted at a glance that the hinged member, dark green, is between the pink shank member and the yellow fixed member, which provides the pivot "d" about which the shank and the hinged member pivot.

Likewise in Petersen 57,391 Danish patent, the hinge member 2, which pivots about the pivot point 16, is located between the shank 1 and the fixed member, yellow, and particularly between the vertical surface of the vertical flange portion and also between the stop—between the shank and the stop portion 18.

Q. Of course in that structure, as you have already explained, it is quite evident that the fixed part of the clamp has—in that instance would be rearwardly extending flanges, which go down alongside the hinge member. Is that not true? A. Oh, certainly. Then in Cobb we have what corresponds to the fixed member in the bail "a" and that is colored yellow, and is fastened to the frame member "B". Then we have the dark green hinged member and the standard or shank of the tool "P" and the

hinged member is between the upper part of the shank and the bail "a", for the most part, although with this particular arrangement the pivot pin portion of the [524] member "a" does pass through between the hinged member and the shank, and also it should be pointed out that in this instance the shank itself comes up and stops against the beam member or frame member "B", that portion colored violet up here for Cobb in Defendants' Exhibit 11.

Carter, as indicated by the drawings, the green hinged member is between the shank and the fixed member so there is no contact or rubbing contact of the shank and the fixed member.

Then down in Rix, as shown in Figs. 1 and 2, and particularly as indicated in the dashed line portion of those two figures, which represent the normal or home base position of the device, the green pivoted member is between the pink shank and the fixed member, so that there is no contact as between the shank and the fixed member.

Q. Mr. Fishleigh, which of those prior art patents or structures, if any, were considered by the Patent Office in connection with the 798 application, insofar as the available records indicate? A. Petersen was the only file wrapper reference from that group.

Q. At page 32 of the file wrapper history, which is already in evidence, I would like to point out some particular [525] language used by Graham's counsel, and ask you a question or so about it.

On page 32 there is some discussion about the old Graham 811 type and then I find this language, "It was pointed out that the present construction"—which of course would be the 798 construction—

The Court: What page are you reading from?

Mr. Morris: Page 32 of the file wrapper, down about a little more than halfway through the second paragraph on the page.

The language is this: "It was pointed out that the present construction avoided this wear by inserting the movable part between the plowing shank and the fixed part and by locating the pivot to avoid rubbing contact of the pivoted part with the fixed part of the clamp. With this

arrangement the vibratory movement of the shank acted on the pivoted part or shank attaching member of the clamp. This shifting of the wear point to the pivoted part facilitates repair and replacement when wear does occur."

Now, is there any other example of the prior art, either of patents or prior use structures, which you have not included on Defendants' Exhibit 20, which would accomplish that same result as outlined by the [526] remarks I have just read, even though it might not be strictly—even though the shank attaching member might not be strictly located between the fixed member and the shank? A. Yes, there is one of the other prior use structures which accomplishes that result.

Q. Which one is that, please? A. That is the Glencoe structure.

Q. And would you point out just very briefly how that wear resisting or eliminating function or result would be achieved in the Glencoe structure. A. In the Glencoe structure, as shown particularly well on Fig. 2 of Defendants' Exhibit 17, there is no contact as between the shank 19 and the fixed part at all during the pivotal motion or rocking about the pivot 8, which might take place as the plow was in operation. Likewise, the arrangement is such that even though the hinged member is below the shank in this case, because of the arrangement of the lug 36 and the corresponding lug on the fixed member, that the contact between those two is practically a straight face-to-face contact without any rubbing as between them, so that the contact which does occur between the fixed member and the hinged member is not such as would result in the rubbing contact and rubbing wear that existed [527] between the shank and the fixed member in the 811 where there was not only a pivotal action but a longitudinal rubbing action as well, that is, a longitudinal rubbing action under load, and the extreme loads, and that was the type of wear that was being discussed at this point, I believe, in the file wrapper.

Q. All right, thank you, sir. Now then, I would like to turn our attention specifically to the mechanical elements of the 798 structure as disclosed and set out in the claims of that patent. Have you prepared charts of those

claims reflecting the mechanical elements as shown in the drawings of the 798 patent? A. Yes, I have.

Q. All right. Will you place first on the easel such chart as to Claim 1 of the patent. That chart is numbered as Defendants' Exhibit 22, is it not? A. Yes, sir.

Q. Now then, will you use the chart and wherever necessary, Mr. Fishleigh, any device or other drawings necessary, and explain the mechanical elements as defined in Claim 1 as they appear in and refer to the disclosure of the patent. A. I should perhaps first say that at the right end of the chart I have taken Claim 1 and broken it down into the [528] mechanical elements as I understand them of this structure. Then at the left of the claim block in the little encircled notes I have indicated what my understanding is of the structure shown in the drawings and described in the specification of the Graham 798 patent, which provides a response or a basis for those mechanical elements as set forth in the claim. That designation is by way of names, numbers and colors. Then by lead lines I have run out to the various parts referred to in the notes to indicate the structure which provides a response, and on the flap I have reproduced Figs. 1, 2 and 6, and then for additional clarity I have included on the main chart underneath the flap Figs. 3, 7 and 5, so that between the two I believe that is quite clear.

The introduction to Claim 1—and do you wish me to go through the detail of that, of what that is, or may I go directly to—

Q. I think that is already entirely evident in the record and I think we can save some time, just go ahead to the mechanical elements. A. The introduction finds its response in the plow having a frame 1 and other parts 5, 6 and 7, all of which are colored violet, and the ground working tool 3, that tool being uncolored but provided with [529] a shank 2, also parts of which being numbered 8, 9 and 10, and colored pink.

The first element refers generally to the mounting 4 as shown in all these various figures but numbered particularly in Fig. 1.

The second element, the fixed member, finds its response in the fixed part 11, which we have colored yellow, having an underface 60 colored red, and that underface does extend from a point just to the left of the transverse frame member as shown in Fig. 2 to the right-hand end of the fixed member, as indicated by the coloring, and it also has the ears 26 and 27 colored yellow, 27 being shown here in Fig. 2, but for that particular item they are shown probably better in Fig. 7 on the main part of the chart underneath the flap where both 26 and 27 are shown as part of the yellow member.

Element 3, a shank attaching member. That refers to the movable part 12 colored green, which has a plate portion 51, that plate portion being shown particularly in the exploded view, Fig. 7, and is provided with an upper face 59, also shown in Fig. 7, which we have colored red, and an underface engaging the upper face of the shank. That underface is not shown particularly but it is the face underneath this [530] plate portion 51 which, when assembled, would contact the upper face of the shank portion.

Now "means connecting the elongated plate portion with the shank for maintaining the upper face of the shank in constant continuous contact with the underface of said plate portion of the shank attaching member."

I have said in order to find a response to that element it is necessary that two things be considered. First, the bolt 56, colored light green, which passes through the shank and the pivoted member at the right-hand end of Fig. 2, but in addition to that the depending loop 57, shown in Fig. 2 but numbered in Fig. 6 on the flap, both of those are necessary in this structure to provide for the functioning suggested here, that is, maintaining the upper face of the shank in constant continuous contact with the underface of the plate portion of the shank attaching member.

Q. Mr. Fishleigh, that particular element of this claim, that is, element 4, is defined solely in terms of the functions performed, is it not? A. That is correct.

Q. And would it be your opinion that in order to find a proper response for that mechanical element that the [531] mechanical element would have to perform the

functions called for? A. Well, yes, or said another way, since this is what is called a means clause, which sometime ago would have been invalid on its face, is now salvaged by statute to say that it may find a response in the structure shown in the patent and mechanical equivalents thereof.

The fifth element, a transverse pin, that finds its response in the transverse pin 48, colored light blue, which pivotally connects the movable part 12 to the fixed part 11.

The sixth element, a coil spring, that refers to and finds its response in the coil spring 65, colored orange.

The last element, again a means clause, having connection with the forward end of the shank, and so forth, that finds a response in the rod 63, 64, 66, 67, those parts which are colored brown in these drawings.

Q. Mr. Fishleigh, I would like, before we leave this Claim 1 and turn to Claim 2, I would like to consider some specific language of elements 2 and 3, the fixed member and the shank attaching member. We have discussed many, many times here during the past few days, of course, some of the specific language I have in mind, [532] and that is the language of the fixed member which specifies a longitudinally extending underface. Then the corresponding language of element 3, or the shank attaching member, specifies an upper face, corresponding with and normally in contact with the underface of the fixed member.

Now then, looking at the specifications of the patent and considering only that language or those features, I wonder if you would refer to column 3, lines 63 through 67, and read that language, please. A. "The plow shank and movable part 12 of the mounting are resiliently retained in normal position with the upper face 59 of the plate portion 51 in clamping engagement with the underface 60 of the fixed part 11."

Q. All right. Now then, turn to column 4, lines 10 through 19, and read that, please. A. "This rocking movement of the shank will cause the movable part 12 to pivot away from the fixed part 11 along with the forward end portion 8 of the shank 2 to effect compression of the

spring 65 so that the stored up action in the spring will return the shank and movable part of the clamp to normal position with the plate portion 51 resiliently clamped against the fixed part 12 of the mounting, as shown in Fig. 2."

Q. All right.

[533] Mr. Scofield: That is part 11, isn't it, instead of 12?

A. Well, it is fixed part 11. If I read 12 I misspoke.

Q. (By Mr. Morris) One other reference in the specifications, column 4, lines 46 through 53. Will you read that, please. A. "The spring seat 66 is then applied over the upper threaded end of the rod to engage the upper end of the spring, after which the nut 67 is applied to compress the spring and draw the movable part 12 into clamping engagement with the fixed part 11, sufficient tension having been applied to normally retain the shank and tool in plowing position."

Q. Now then, have you studied the specifications of the patent and can you tell us whether or not those are the three references, the three places in the specifications where there is some discussion of the positioning of the shank and the hinge member relative to the fixed member in this device? A. In the specification proper I believe those three are the only references to this engaging operation.

Q. And of the three references which we have just noted it is of course quite apparent that the first one is the only one that mentions the faces of the fixed member and the shank attaching member as such, is it not? [534] A. That is correct.

Q. Now, have you studied the original claims as contained in this application, the 798 application? A. Yes, I have.

Q. At the outset there were 12 claims contained in the application, were there not? A. That is right.

Q. Have you studied those 12 claims to determine whether or not any of the 12 contains a specification of a longitudinally extending underface of the fixed member and a corresponding and normally contacting upper face

of the pivoted member? A. I have studied those 12 claims with a view to determining that.

Q. And what is the fact as to the content of those 12 claims on that specification or those two specifications? A. There is no reference to either of those points in the first 12 claims. In fact, generally speaking, the fixed part is merely referred to as a part adapted to be fixed to the frame. In some instances, some additional limitations are added but in no place is there a reference to the lower longitudinal face of the fixed part and its contacting relationship with a similar upper face on the hinged member.

Q. When, from your study of the file wrapper history, did [535] the specification of the longitudinally extending face of the fixed member and the corresponding upper face of the pivoted member come into the claims? A. Those two limitations came in on pages 29 and 30 of the file wrapper. In point of time they came in after the first 12 claims had been rejected, after a pair of oral interviews with the examiner and in the same amendment which started out by cancelling the preceding 12 claims.

Q. Now, of course the Claims 13 and 14, which were added by that amendment, ultimately issued as Claims 1 and 2 of the patent with some very minor wording changes, did they not? A. That is correct.

Q. Was there any change in the wording of the final claims as issued in the respect which we are discussing right now, that is, "the longitudinally extending underface in engagement with a corresponding upper face of the shank whereby the plate portion of the shank attaching member is between the shank and the fixed member"? A. No, there was not.

Q. Now, in the remarks contained in the file wrapper history, following the interview with the examiner and following the substitution of the two new claims [536] for the 12 which had originally been in the application, do you find any language in those remarks which indicates the importance or the purpose of those corresponding contacting faces of the fixed member and the pivoted member? A. Yes, there is some very specific and definite language about that.

Q. I would like for you then to consider and point out to the Court some of that language which you consider to be pertinent. I would like to first ask you to direct your attention to page 33 of the file wrapper history, the third paragraph on that page, commencing with the word "However," which is the beginning of the second sentence in that paragraph, and read such portion of it as you consider pertinent to the particular inquiry right here. A. "However, the examiner believed that the Danish patent to Petersen disclosed the idea of mounting the pivoted part of a clamp between the shank and the fixed part. It was then pointed out that the pivot and inter-contacting parts have a different relationship than the pivot and contacting faces of applicant's present clamp. The mounting of the Danish patent, as well as the contact points between the fixed and pivoted parts, have a different relationship with respect to the plow [537] frame and to the portion of the plow shanks."

Q. All right. Then turn your attention over to page 34 and down in the second paragraph, about the middle of the paragraph, the part beginning, "Applicant's mounting has no beak," and if there is any portion there which you consider as shedding any light on the question will you read it, please. A. Yes. We might start right there—

Q. If you want to back up and pick up any context that should be considered, do so. A. Well, we could start at the beginning of the paragraph. "This is confirmed by the translation which states, 'Part 2, which rotates on a bolt 16 passed through the lateral cheeks 8, has a beak 17 at the front'." And parenthetically I should say here, of course. that this portion of the file wrapper discussing the Petersen patent, the Danish patent, which we have previously considered, and the part referred to as a beak 17 is that portion of the green member on our drawings which contacts with a portion of the fixed member to act as a stop.

Continuing: " 'which by engaging on the part 18 of the front wall carried back of the machine frame 3 stops the movement of the part 2, when the latter is pressed back by the spring 9.' Applicant's [538] mounting has no beak. The contacting faces of applicant's device extend substantially the full length of the mounting, and no one portion

of one face contacts the other face before other portions come into contact. Consequently the stop faces are not even equivalent to a beak."

Q. Then I would like for you to direct your attention to page 35, the first sentence in the last paragraph ending on that page, and read that, please. A. "The present claims, which are two in number, have been substituted for the original claims to better bring out the present invention and distinguish from any hypothetical structure resulting from modification of applicant's patented structure as taught by the Danish patent to Petersen."

Q. Then turn to page 36, the paragraph beginning, "Claim 13 distinguishes" and read such part of that as you think may be pertinent on the inquiry. A. First I should say that Claim 13 of the application referred to in this paragraph is the one which eventuated as Claim 1 of the patent in suit. Quoting, "Claim 13 distinguishes from the references by defining a fixed member having a longitudinally extending underface terminating forwardly of the transverse member to which the mounting is adapted to be fixed and a shank [539] attaching member having an elongated plate portion provided with an upper face corresponding with and normally in contact with said underface of the fixed member and provided with a longitudinally extending underface in engagement with the corresponding upper face of the shank."

Q. Now then, down in the next paragraph, just about the end of the paragraph, I believe there may be another reference to contacting faces, but I wish you would read the whole paragraph for the record, please. A. "The claim further distinguishes from the hypothetical structure by specifying a transverse pin pivotally connecting the shank attaching member to the fixed member at the rear ends of said normally contacting faces."

Q. From the file wrapper history here, Mr. Fishleigh, do you feel that the language as to contacting faces of the fixed member and of the pivoted member are matters of some significance to the mechanical elements of this structure as set out in these claims? A. I do, very definitely, sir.

Q. Now then, just one other item of Claim 1 I would like to consider before passing to 2. Element 4, the means for connecting the shank to the shank attaching member, which you have already discussed and pointed out, I [540] wish you would consider the specifications of the patent and point out to the Court the particular language of the specifications which cover those specific structural or mechanical elements. Refer to column 3, lines 50 through 62 of the patent, please. A. "The movable part also includes a depending loop 57 having a rectangular passageway 58 substantially conforming to the cross sectional shape of the end portion of the shank whereby the end portion 8 of the shank is passed therethrough and embraced by the loop portion to rock with the movable part of the pivot pin 48. The nut 56 of the bolt may be set up snug but is left sufficiently loose to permit slight longitudinal movement of the end portion of the shank relatively to the pivotal part of the clamp. The nut '56' is backed by a jam nut '56' to prevent turning thereof after the nut '56' has been set."

Q. Are those the specifications which define the means for connecting the shank to the shank attaching member in the 798 structure? A. They are.

Q. Turn, please, to Claim 2 of the patent, and have you prepared a further claim chart for that claim? A. Yes, I have a similar chart, which has been marked for identification as Defendants' Exhibit 23 and which does [541] treat the mechanical elements of Claim 2 in a way similar to that in which the preceding chart treated the mechanical elements of Claim 1.

Q. All the way through element 1 and the first portion—well, even all of element 2, I believe the language of the two claims is precisely the same, is it not? A. I believe it is. I think it is word for word the same.

Q. No further explanations then appear to be necessary. Turn your attention to element 3, as set out in Claim 2, and explain from there on, please, paying particular attention to where there is something different from what there was in Claim 1. A. Well, that portion of element 3 down to "shank attaching member" is also the same either word for word or generally the same as in the pre-

ceding one. Then "said shank attaching member having a lug extending upwardly between the said ears of the fixed member," and so forth. And then, "said shank attaching member having depending means embracing the shank at the rear end of said plate portion."

That finds its response in that portion in the upwardly extending ear 52 colored dark green, that being the portion shown over here in Fig. 7 and marked as 52. It is that portion of the shank attaching member or pivoted member into which the hole is placed [542] for cooperation with the pivot pin 48. That same ear is shown in Fig. 2, but doesn't carry the 52 number.

Then in addition to that the depending loop 57, shown in Fig. 2, also shown in Fig. 6 and numbered 57, and also shown over here in the exploded view, Fig. 7. That is the depending loop through which the shank is passed and which, as the next item says, cooperates to hold the shank in position.

Then the next item, "a bolt connecting the forward end of the plate portion with the forward end of the shank and cooperating with the shank embracing means in maintaining the upper face of the shank in constant continuous contact with the underface of said plate portion."

Now, that last is substantially the same language as occurred in the latter part of element 4 in Claim 1, and here specifically spells out that it is not the bolt alone but the bolt cooperating with the shank embracing means, that is, this depending stirrup means 57, which does maintain the upper face of the shank in constant continuous contact with the underface of the plate portion. As to this element it refers only to the bolt means but that bolt means cooperates with the element 57, that is, the stirrup means. Then the pivot pin is substantially the same, a transverse pin 48 and [543] coil spring 65, and the response for element 7 again the rod 63, 64, 66 and 67, that is, the rod and its associated mechanism, that is, the washer and the nut. But I point out here that the function of those parts, as set forth here and as was set forth previously, in the last element "whereby the spring yieldably maintains said normal contact of the upper face of the plate portion of the shank attaching member with the underface of the

fixed member." In other words, the functioning of that is specifically spelled out in these last elements, and that also was the part of the material which I believe was added in these two new Claims 13 and 14.

Q. One minor point in element 5, as set out in Claim 2, do you find any specific language which more precisely locates the position of the pivot pin than is in the similar element of Claim 1? A. Yes. It refers to the pivot pin being above the plane of the underface of the fixed member.

Q. Does that complete your discussion of the two claims as they apply to the structure as shown in the 798 patent disclosure? A. Well, yes, unless you have some further question about it.

* * *

[544] Q. (By Mr. Morris) Mr. Fishleigh, we have now reviewed the prior art, at least portions of the prior art which have been cited in defendants' answer and that which has been cited in the file wrapper history of this patent; also considered the mechanical elements as they are set out in the claims of the patent.

I would now like to turn our attention to a somewhat different subject approaching those subject matters.

What experience have you had with mechanics and designers and engineers? A. Well, starting back in 1919, I was for quite some stretch a mechanic in overalls, and since that time I have had almost constant cooperation with mechanics, designers and engineers and others.

Q. Have you had any particular assignment or work which gave you special association with younger engineers and gave you an opportunity to observe the normal capacities of those people? A. Yes. For a number of years prior to my moving back from Detroit to Chicago in 1951, I served on a committee [545] of the Michigan Society of Professional Engineers, which cooperated with the State Board of Registration and our cooperation consisted in working out examination questions and correcting the blue books of those who took the examination for registration as professional engineer. Now, those were young fellows who not only had an engineering degree

from some recognized college, but also had at least five years of practical experience.

My work in that connection gave me a rather definite insight into the types of problems that they were expected to tackle, and the sorts of results that they came up with.

Q. From your experience in those fields, working with and observing the work of mechanics, designers and engineers, do you feel that you are qualified to appraise the work of those people and to judge or form an opinion as to what might reasonably be expected of them in their normal capacities, expected skills, and so on? A. Well, I believe I am so qualified. I have occasion to do it very frequently.

Q. Then based upon that experience and qualification, considering both your personal experience and your observation of the mechanics and engineers whom you have just mentioned, I want to ask your opinion about a phase of this matter that I think is quite important [546] on the issue of—it goes to the issue of invention in the case. I would like for you to assume with me some specific things for purposes of answering some hypothetical questions. I want you to assume that a mechanic or designer or engineer, skilled in the agricultural implement art, had before him the Jeoffroy SC-580 spring clamp structure, which you have just explained this morning. Assume further that he had acquainted himself with the prior patents and devices which are represented on the charts, the prior art charts, Defendants' Exhibits 11, 19 and 20, which you also explained this morning.

Now, with those assumptions I want to know whether in your opinion it would have been within the expected skill of a designer or mechanic or young engineer, skilled in that art, to have used a mounting such as the Jeoffroy SC-580 mounting, and to have fastened the shank of the ground working tool in the structure with the pivoted shank attaching member positioned between the fixed member and the shank and with the pivoted shank attaching member and the shank fastened together in the manner disclosed in the Rix patent?

Mr. Fishburn: If Your Honor please, we object to that, first, as based on assumptions, and more [547] important

is that it is the very thing that this Court has to determine and it is not for this witness to determine that in this case, the same point that I brought up before. Whether or not this man has worked with young people and knows what they can do, I heard that same story 11 years ago, didn't impress me too much, when he testified against the 811 patent. I think it is entirely outside of the province of this witness to testify along those lines. That is entirely the function of this Court.

* * *

[554] Mr. Fishburn: As I understand his question, he went into the witness's background about working with young people, what young engineers could do, and I think that basing his question on what some other designer or anyone else would do, having this art before them, is improper absolutely. This witness can give what he could do, as far as I am concerned.

The Court: I think maybe so, I think that gets sort of speculative and conjectural as to what other people can do.

Mr. Fishburn: If he wants to give his opinion with all this art before him, could he have worked out this invention, that is a different matter, but whether [555] or not anyone skilled in the art could do it, that is getting clear out of his province.

The Court: I think that is getting pretty speculative, anyone skilled in the art. I don't see where it has much probative value in that broad form, anyone skilled in the art. The Court wouldn't know who it was or how skilled they were.

Mr. Morris: It is not directed to anyone, Your Honor, it is directed to a mechanic or designer operating in this field, that is, the field of agricultural implements, and it is based upon observation and relationship with those people, that class of people.

Mr. Fishburn: It is further speculative, Your Honor, whether or not he saw these other men working in this field. It seems to me so speculative that it is clear out of line of proper evidence, and that is the thing you have to determine.

Mr. Morris: As the Supreme Court said, I don't know how the trier of facts can be expected to work in a vacuum, if the test is what could be expected of those ordinarily skilled in the art, how the Court can formulate or how any court can formulate an opinion as to what would be expected of those skilled in the art without some indication or evidence as to what the capacities of those people might be, [556] what could be or would be expected of them, those capacities and expectations being given by people who do know.

The Court: It appears to me that it would be quite speculative, in the form in which you have asked the question. It is different than other hypothetical questions, addressed to a witness's own expert knowledge in a particular field about which he is testifying. I think he could give his opinion as an expert as to whether he could have conceived this from the prior art.

* * *

[558] Q. (By Mr. Morris) Then I will rephrase the question, Mr. Fishleigh. In your own opinion, with the samples of the prior art before you which I have already directed your attention to, that is, Jeoffroy SC-580 and those prior art matters disclosed on the charts, would it have been quite feasible, quite evident, that you could take the Jeoffroy type spring clamp structure and attach the shank to a hinge member with the hinge member or pivoted member situated between the fixed part and the shank and fastened to the shank substantially in the same fashion as disclosed in the Rix patent? A. I believe it would be a very obvious, very normal, common sense, natural thing to have done.

Q. Have you prepared a chart to demonstrate the combination of those two structures into a composite, workable structure? A. Yes.

Q. Would you place that chart on the easel and identify it, please. [559] A. That chart has been marked for identification as Defendants' Exhibit 24.

Q. All right. Will you please proceed to explain how the two prior references could have been combined in the manner you have suggested? A. Yes. By way of brief

explanation of the organization of the chart, in the upper left I have photostatically reproduced the figures of the SC-580 structure which previously appeared on one of the colored enlargements here this morning, and underneath that I have set forth a description of that Jeoffroy structure on a flap and main chart underneath it, and that description has been couched, insofar as is applicable, in the language of the mechanical elements of Claim I and/or Claim 2 of the 798 patent, so as to indicate the points of similarity between this structure and the 798.

Also in the upper right-hand corner I have photostatically reproduced certain of the figures of the Rix patent and have set forth a description of that structure, again phrasing the description in accordance with the language of the mechanical elements of the claims here in suit insofar as that language was pertinent.

In the center in the note I have indicated what one would do to develop the structure we have just [560] discussed, and I have said, "Use the Jeoffroy mounting M including the fixed member 3, shank attaching member 8, pivot pin 7, coil springs 12 and rod means 9, 10. Move the ears 26, 27 of the fixed member rearwardly and upwardly.

"If desired, place the shank 2 below the shank attaching member 8, bolt them together and use a depending loop v, all as disclosed in the Rix patent 287,965."

Now backing up a little bit, and looking at the description of the Jeoffroy structure, we have a mounting which we have marked M "for pivotally attaching and supporting the shank 2, (colored pink) of the ground working tool to a transverse working member 1, (colored violet), of the frame, the mounting including a fixed member 3 (colored yellow) adapted to be fixed to the transverse member of the frame and having a longitudinally extending underface 15 (colored red) terminating forwardly of the transverse member to which said mounting is adapted to be fixed, and having ears 26, 27 extending rearwardly from said underface at the sides thereof." And I should point out that in this case they do extend rearwardly and downwardly.

"A shank attaching member 8 (colored green), having an elongated plate portion 51 provided with an [561] upper

face 59, said shank attaching member having a lug 52," and that is shown here in Fig. 2, "extending downwardly between said ears of the fixed member and disclosed at the rear end of the plate portion.

"A pivot pin 7 (colored light blue) extending transversely through said lug 52 and pivotally the connecting shank attaching member to the fixed member and carried by the ears 26, 27. Coil springs 12 (colored orange) having one end seated on the forward end of the fixed member, and means 9, 10, (colored brown) having connection with the forward end of the shank attaching member, and with the other end of the coil spring whereby the spring yieldably maintains normal contact of the upper face of the shank member with the underface of the fixed member to maintain the normal plowing depth of the ground working tool."

From that description it will be evident that that description follows closely much of the language of the mechanical elements of the claims, but differs therefrom in certain details.

Now, as to Rix, we have "a mounting M for pivotally attaching and supporting the shank D (colored pink) of the ground working tool to a transverse member B (colored violet) of the frame, the mounting including a fixed member (colored yellow) adapted to be [562] fixed to the transverse member of the frame," and that is the portion to which I am now pointing and also includes a fixed member up above. "and having ears"—and that fixed member does have ears extending out, marked—I believe it is "t". Anyway, the ears which provide the hole through which the pivot then fastens. Then "a shank attaching member (small) c (colored green) having an elongated plate portion provided with an inner face and a vertically extending outer face."

In other words, as we see it in Fig. 2, that shank attaching member, and in Fig. 3 too, does have an elongated plate portion, it has a vertically—or it has an inner face and a substantially vertically extending outer face. "the outer face in engagement with a corresponding inner face of the shank whereby the plate portion of the shank attaching member is between the shank and the fixed member."

In other words, this plate portion is between the fixed member and the shank and between the shank and the frame member.

"Said shank attaching member having lugs 'tt' (colored dark green)," and those are the lugs which are evident in Figs. 3 and 4, "extending inwardly between said ears of the fixed member and disposed at the [563] lower end of the plate portion, said shank attaching member having outwardly extending means v (colored light green) embracing the shank D at the lower end of the plate portion." And that is the stirrup nub v, colored light green, through which the upper end of the shank member passes.

Q. Is there a further element there that you want to mention? A. Yes, bolt "e", that is the small bolt, colored light green, connecting the plate portion with the upper end of the shank and cooperating with the shank embracing means in maintaining the inner face of the shank in constant continuous contact with the outer face of said plate portion. And a pivot pin "n" and a coil spring.

Now coming down, after having indicated these rather simple additions or changes that would be necessary in the Jeoffroy mounting, I have said "thus producing the Graham structure consisting of the mechanical elements defined in the claims of the patent in suit," of the 798 patent, and I have redrawn the structure of Jeoffroy SC-580 making the changes suggested in the note in the center and producing a structure such as shown in the lower right-hand corner of the chart.

Q. Before turning to a consideration of the mechanical [564] elements of the claim, as applied to this composite structure, Mr. Fishleigh, what are the total changes, mechanical changes necessary there to adapt a shank attaching member such as in Rix into a spring clamp structure such as Jeoffroy? What are the total mechanical changes or engineering or manufacturing problems that you would have to do that? A. Well, the first thing is to attach the shank to the pivoted member.

Q. Is that fully disclosed in Rix? A. Yes, in the same type of fastening means used in the 798 patent, namely, a stirrup and a bolt.

Q. What other changes would be necessary? A. Well, the second thing—well, in connection with that I have said use a depending loop. In addition to that, to turn the plate —the shank attaching member over so as to put the pivot above instead of below the shank, and that would require a mechanical change in the fixed member with the ears—run them up and back instead of down and back.

Q. I notice that in the composite structure you have retained the "T" headed shape of the hinge member as it actually exists in the Jeoffroy structure? A. Yes.

Q. Would it have been equally feasible to take the single [565] elongated plate portion from Rix and orient it into the Jeoffroy SC-580 structure and use a single spring and rod rather than the Jeoffroy two springs and rods? A. Yes. And in that case, following along the lines there, the single spring would have run through with this orientation through both the shank and the hinge member, or even in this structure it would also have been simple to have used a U-bolt instead of two separate bolts, in which case it would have gone down underneath the shank member itself.

Q. That is, if you desired to take the hinge member bodily out of Rix as it is and place it into the Jeoffroy structure, which uses two springs and two spring rods on opposite sides, on each side of the shank rather than passing through the shank, then you say you could have used the common expedient of a U-bolt to pass underneath rather than tying it into the end of the plate itself? A. That is correct.

Mr. Fishburn: If Your Honor please, he is leading the witness. We object to that form of question. I would like for my objection to go to all this type of questions. I can't tell whether he is testifying or whether the witness is testifying.

Mr. Morris: All right, you are right, Mr. [566] Fishburn. I thought I might speed this proceeding up just a bit by moving that way.

Q. (By Mr. Morris) Now, Mr. Fishleigh, have you considered the mechanical elements of the claims of 798 from the standpoint of whether they found final response

in the composite of Jeoffroy SC-580 and Rix? A. Yes, I have.

Q. What is your opinion on that? A. I find in that structure there is a response to each of the mechanical elements. In two cases there is a slight difference in detail from the structure originally described by those elements, which would require a moderately broad construction.

Q. On the lower left-hand part of the chart have you set up blocks from the patent and shown on the face of the chart wherein you found a response in the composite structure of Jeoffroy and Rix? A. That is correct.

Q. Now, the two elements that you stated there might be some minor detail that should be brought out, would you do that, please. A. Well, in element 5 it calls for a transverse pin pivotally connecting the shank attaching member to the fixed pivot at the rear ends of said normally contacting faces.

[567] Now since, as shown here in Fig. 2 of the composite structure, there is—while a longitudinally extending face, it is limited in its extent at the right-hand end of the figure, and that pivot point is not precisely at the rear end, it is removed some little distance to the left of it, so that it is to the rear of the said normally contacting faces but perhaps not precisely at the rear end, although in the Graham structure 798 it is not—the pivot point is not precisely at the rear end, it is slightly back, as in this scale of this drawing, and about three-quarters of an inch behind the rear end of those faces, but to that extent there is a slight difference.

Q. All right. And what is the other element in which there is a slight difference or a possible slight difference? A. Well, in the last element the "means having connection with the forward end of the shank." As exactly shown, the means for connecting the spring, the brown rods, are connected directly to the pivoted member and in this particular structure have no direct, only the indirect connection to the shank. If instead we had used U-bolts then it would have connected directly to the shank, but the element simply says "means having connection with the forward end of the shank."

[568] Q. Would that be the same kind of indirect attachment of the means to the shank as in the Deere 100 series wherein the rods connect with the forward end of the hinge member and the shank is then in turn bolted to the hinge member? A. Yes, it is quite that way and would require the same sort of broad construction of the element in order to find a direct response.

Q. Now, in Claim 2 the same minor differences in language would be present as in Claim 1, particularly in element 7, would they not, Mr. Fishleigh? A. That is correct.

Q. Now, I notice in the file history, and of course as you have observed from many instances of studying file histories, the examiner mentions the teaching of the Graham 811 structure in the light of other references. Have you considered here a starting point with Graham 811 and considered some other elements of some other examples of the prior art for considering another way in which a composite structure might be made from the art? A. Yes, I have.

Q. Is there another simple way which you find for combining other segments of the art to produce a quite similar composite structure? [569] A. Yes, there is.

Q. Have you prepared a chart to demonstrate that? A. Yes.

Q. Would you place it on the easel, please.

(Witness complies.)

Q. What pieces of prior art have you used in this composite, Mr. Fishleigh? That is Defendants' Exhibit 25. A. In this instance I have started with the Graham 811 structure and have made certain changes in the light of the teaching of the Petersen patent and the Glencoe prior public use.

Q. All right. Will you go through that chart, please, and explain in the same fashion as you did with the other. A. Yes. Again, I have described the Graham 811 structure in language following the language of the claims—of the elements of claims, wherever that was possible, and we have "a mounting M for pivotally attaching and supporting the shank of the ground working tool to a trans-

verse member of the frame." That refers to the mounting "M" generally, which does pivotally attach and support the shank 34, colored pink, to the transverse member of the frame, colored violet and numbered 3 in these views.

"The mounting including a fixed member 41 (colored yellow)," and that is the member which has a [570] plate portion and then side members extending down to form a channel or way for the other material to be mounted within.

"A fixed member adapted to be fixed to the transverse member of the frame and having a longitudinally extending underface '42' (colored red)." In this instance the longitudinally extending underframe does extend from the left-hand end of the frame member, as shown in this drawing, a considerable distance to the extreme right-hand end of the fixed member, as it is shown in Fig. 4 of the 811 patent on this chart.

That underface "terminating forwardly of the transverse member to which said mounting is adapted to be fixed," and it does extend considerably forward or to the right of the right-hand end of the transverse member. "The fixed member having ears 59, 60, (colored yellow), extending rearwardly from said underface at the sides thereof." Now, these ears do extend rearwardly but in this instance they extend downwardly.

"A shank attaching member 63 (colored green) having an elongated plate portion provided with an upper face 63 and a longitudinally extending underface." That is the hinged member or shank attaching member which has an upper face 63 as indicated—well, I don't just—yes, as indicated [571] here in the left of Fig. 4, and an underface not specifically numbered, perhaps 63, although 63 goes to the entire plate number, but it is the surface to which the lead line from 63 points.

"Shank attaching member having a rib 64." That is the rib which extends down to approximately the center line of the pivot pin, "extending downwardly between said ears of the fixed member and disposed at the rear end of the plate portion and below the plane of the underface of the fixed member." In other words, those do come down here

below this underface of the fixed member and at the rear end of the plate portion of that member.

There is also a pivot pin carried by the ears on the fixed member, that pivot pin colored light blue, which pivotally connects the shank attaching member to the fixed member, whereupon the shank attaching member fits upon the rocking movement of the shank.

"A coil spring and means having connection with the forward end of the shank and with the other end of the coil spring." Now, here again that connection with the forward end of the shank is through the hinged member.

Now over in Petersen we have "a mounting M for pivotally attaching and supporting the shank 1 of the [572] ground working tool to a transverse member 3 of the frame." The frame transverse member is the violet member and the yellow here is the fixed member, which as I previously pointed out—that comes up in the next element.

"Fixed member 4 adapted to be fixed to the transverse member of the frame and having ears at the sides thereof." Those are the ears which extend down and are an integral part of the side members of that fixed member. Then "a shank attaching member 2," which is colored dark green, "having an elongated plate portion," that is the part to which I am pointing and to which the lead line 2 runs, "provided with a vertically extending face," and it does have a vertically extending face on the left-hand side of the device, and it is shown in this picture, "in engagement with a corresponding face of the shank whereby the plate portion of the shank attaching member is between the shank and the fixed member, said shank attaching member having a lug extending between the ears of the fixed member," and that is the lug on that shank attaching member through which the pivot pin passes.

Q. Would that be, Mr. Fishleigh—of course it doesn't show in the drawing—would that be behind the yellow portion [573] where the pivot pin is located as it appears in the drawing there? A. That is correct, that portion of it. Now, the shank attaching portion also has "outwardly extending means 5 (colored light green) embracing the shank at the lower end of the said plate portion" at this point (indicating).

Then there are means "cooperating with the shank embracing means in maintaining the face of the shank in constant continuous contact with the face of the plate portion." In other words, this screw 6 holds the shank up into constant contact with the hinged member. Then a pivot pin and a coil spring.

Now coming down to the Glencoe device, "a mounting for pivotally attaching and supporting the shank 19 of the ground working tool to a transverse member C of the frame, the mounting including a fixed member A (colored yellow), adapted to be fixed to the transverse member of the frame and having ears." The ears are not particularly shown in this view, but they do extend down to provide a support for the pivot pin 8.

Q. By reference to Fig. 1 of the Glencoe drawing which appears on the chart 11, it has already been explained, do the ears you just mentioned appear quite clearly? A. Yes. Then "a shank attaching member having an elongated plate portion, said shank attaching member [574] having a lug (colored dark green)," and that is the lug extending downward and between the ears of the fixed member through which the pivot pin 8 passes, "said shank attaching member having upstanding means 29 (colored light green) embracing the shank at the rear of said plate portion", and that is the stirrup-type member that we have previously discussed.

In addition to that "a bolt connecting the plate portion with the forward end of the shank." That is the bolt 32, also colored light green, and then we have a pivot pin, a coil spring and means for connecting the forward end of the shank attaching member with the other end of the coil spring "whereby the spring yieldably maintains contact of the shank attaching member with the fixed member," and of course it will be recalled that that contact is through the lugs 36 and the corresponding depending lug on the fixed member.

Now what we have said there is to "use the Graham 811 mounting M including the fixed member 41, the shank attaching member 63, pivot pin 62, coil spring 66 and rod means 71.

"If desired, mount the shank attaching member 63 between the shank 34 and the fixed member 41, as in the Petersen Danish patent, and attach the shank 34 to the shank attaching member 63 by means of [575] a bolt 32 and a loop 29, as in the Glencoe mounting." And when that is done we would get a device as shown in the drawings at the lower right and that in its features approximates or equals the structure shown in the Graham patent in suit.

Q. Mr. Fishleigh, I note that in the final composite picture or drawing on the lower right-hand side of the chart that the pivoted shank attaching member does not come out in precisely the same form as it appears in either 811, Petersen, or Glencoe. A. You mean at the left end?

Q. Yes, at the left end primarily, of course, particularly in its arrangement with the pivot pin and the stirrup, and what is the reason for that? A. Well, that structure was turned over from the 811 patent and the ears or the lug on it moved upwardly and backwardly a little bit to clear the frame member and then the stirrup member put down from it. At the other end it had to be turned over, of course, to provide for movement of the rod in the same manner as in the 811 patent, but with the flare of the opening in the other direction, and we filled in the space between the side flanges of the 811 structure.

Q. In the field of mechanics state whether or not it is a rather common practice to adapt a part from one device [576] and incorporate it into another device? A. Well, yes. A great deal of my work in so-called production engineering during the—well, the 30's and 40's—dealt with taking mere diagrammatic showings of structures, sometimes that had been patented and sometimes not, and adapting satisfactory mechanisms to make them operate in the intended fashion.

Q. And in adapting one part from one mechanism to make it work upon another mechanism, state whether or not it is frequently necessary to make some minor modifications of form in order to fit the two together? A. Oh, yes.

Q. Do those modifications in form materially affect the actual operation of the part itself? A. No. They fit in-

to the environment sometimes, sometimes changes in form for clearance and other times, as in this case, in part to provide for operating contact with other parts.

Q. And then have you studied the mechanical elements of the claims, or as specified in the two claims, to determine whether or not they find a response in the composite structure of 811, Petersen, and Glencoe? A. They do, as indicated by the notes alongside of the two claim boxes and the flap on the main chart.

Q. Is there any special point that needs any particular [577] clarification in connection with those? A. I don't believe in this instance, no, sir.

Q. Now then, Mr. Fishleigh, you have not prepared any further charts to demonstrate how the prior art might be combined to produce a structure quite similar to that of the patent in suit, but I wonder, without the assistance of charts, what might be done in the way of combining the Rix patent with the Graham 811 structure, rather than combining it with Jeoffroy SC-580 as we have demonstrated on the preceding chart? A. Well, the same approach would end up with substantially the same result because of the similarity between the Graham 811 and the SC-580 and at least those mechanical elements which we are concerned with here.

Q. Mr. Fishleigh, now that we have given a rather full consideration to the prior art and to the 798 structure, I wonder if these conbinations, these suggestions of fastening the shank and the hinge member together first occurred to you after you had full knowledge of the 798 structures. Did they occur to you—

Mr. Fishburn: If Your Honor please, I think that is entirely leading and surely not permissible in a case of this kind.

The Court: I believe it is leading.

Q. (By Mr. Morris) All right. Mr. Fishleigh, state whether [578] or not you ever gave any consideration to the fastening of the shank of a plow of this sort to the hinge member of a plow of this sort before you ever saw the 798 patent or saw any disclosure of the 798 patent? A. Yes, I did.

Q. When did that first occur, please? A. Well, that first occurred to me back just a little more than 11 years ago in the course of the testimony in the first Graham-Jeoffroy trial at a time when Mr. Graham was testifying as to the deleterious effects of fixedly attaching the shank to the hinged member, and to mounting the pivot member above the plane of the stop member or the shank attaching member, and at that time we considered the general proposition and, without even the benefit of any prior art, suggested as a very logical and proper design that it would be far better, instead of having the wear producing floating type of arrangment of the 811 patent, and the same thing is carried over into the SC-580, in part, if we had in the first place fixed pivots for the hinged member instead of the loose pivotal arrangement resulting from just the slot in the hinged member fitting over a pivot pin, if we made that—

Q. Do you recall—excuse me. Go ahead. [579] A. And if we fastened the shank to the hinged member instead of letting it ride freely and in a manner which put the entire load of the plow upon the spring bolt which, as I indicated then, I felt was a very undesirable design.

Q. During the course of that trial in April, 1951, which of course was even prior to the filing date of the application of the 798 patent, do you recall whether an actual courtroom demonstration was conducted, in which you demonstrated the closing of the pivot at the rear of the Graham 811 hinge member and demonstrated the fastening of the shank fixedly to the hinge member by means of some fastening screws? A. Yes. Such modification of one of the structures was made and demonstrated in court.

* * *

Q. (By Mr. Morris) Now, Mr. Fishleigh, giving consideration to the mechanical elements of 798 again, do you find in the 798 structure any new mechanical element that is not disclosed in the prior art which we have considered here? A. No, I find no new elements.

Q. Do you find any evidence of a new result that would be achieved by the 798 structure as compared to the structures of the prior art? A. No, I find nothing new in the particular functioning.

Q. From your observation of the plowing work done by these various types of tools in the field, is there anything to indicate that the structure of 798 would do any different plowing job than the others that have been given consideration? A. Well, of course I have never seen a 798 structure operate, but based on what other structures I have seen operate and analyzing what would be expected of that structure, I would say that they would operate in the same functional manner.

Q. In the unification of elements as contained in 798 [581] structure, as set out in the patent, do you find any new function for any of the individual elements performed in that unification that is different from what functions are performed by those elements in the prior art structure? A. No.

Q. Do you find, Mr. Fishleigh, anything at all surprising or unexpected insofar as the over-all performance or the performance of the individual elements in the unification of elements as found in 798? A. No. I have studied that rather carefully and I find nothing that would be unexpected or surprising.

* * *

Q. (By Mr. Morris) So the old mechanical elements, as selected and unified here in 798, function and do the work just as you would expect them to do from your [582] study of the elements in the art? A. Yes. In fact, they function in the way that I would have expected them to do when I first made the suggestion on this general type of organization in 1951.

Q. Mr. Fishleigh, it was pointed out in the file wrapper history here, and there is some testimony in the record at this point, that the Graham 811 type structure had some detrimental wear factors, and in the file wrapper it is pointed out that the 798 structure eliminates some of those detrimental wear factors and thereby achieves a more economical result. While that might be quite true as compared to over the 811 type clamp with its sliding wear producing pivot, do you find from this unification in 798 any increased efficiency or cheapness or superiority of performance as compared to the Glencoe prior art clamp. A. No.

Q. At the risk of just a bit of repetition and tedium, in the prior art structures such as 811 and Jeoffroy SC-580 and Glencoe, is there a stop function performed, that is, a function to position the shank in its normal operating position? A. Yes, sir.

Q. And in those structures does the fixed part of the clamp perform a part of that stopping function? [583] A. Yes, the fixed part furnishes one side of the stop means.

Q. In some of the references other than those we have just mentioned is the stop function performed by some other part of the plow or mechanism? A. Yes. In some instances, for instance in Cobb, the one side of the stop function is performed by the frame member. Up in Rix the one side of the stop function is performed by the nut on the end of the spring bolt.

Q. In some, such as Glencoe, Petersen—well, I will just take those two as examples—is the stop function performed by a contact of the movable member, some part of the movable member with the fixed member or some part of the fixed member? A. That is true in both Glencoe and Petersen.

Q. Are there other references in the art where the stop function is performed by a direct contact of the shank itself with a fixed part of the clamp or some part of the fixed part of the clamp? A. Yes.

Q. For example? A. That would be true in 811.

Q. Are there instances where a stop function is performed in the art by direct contact of the shank itself with the beam of the plow? [584] A. That is true in Cobb, for example.

Q. If a matter of how the shank is to be positioned were before you, would it seem quite clear that there is a number of different selections that might be made from the existing art as to how the shank would be positioned? A. Oh, certainly. Any part of the movable organization coming in contact with any part of the stationary organization may provide such a stop mechanism.

Q. Is there anywhere in the art, as it existed without modification, where you found a longitudinally extending underface of a fixed member which was in normal contact

with a corresponding longitudinally extending upper face of a hinge member or pivot member? A. I don't recall any such at the moment.

Q. If we would accept a lug element on the fixed member contacting a lug element of the movable member as satisfying such call for longitudinally extending faces, would you find that in the art? A. Oh, yes. That is true particularly in the Glencoe use structure.

* * *

[585] Q. All right, Mr. Fishleigh, let's turn our consideration to the question of mechanical elements of the claims of this patent as compared to the two Deere structures that are accused here.

* * *

Have you prepared charts from which to work in making that comparison? A. Yes, I have.

Q. Will you take first the chart which you have prepared pertaining to Claim 1 of the patent and to the Deere structures and place it on the easel.

(Witness complies.)

Q. We have identified that chart as Defendants' Exhibit 28, and it is now on the easel. Will you please explain [586] that chart, the mechanical elements as contained in the claims, first considering the Deere 650 structure, Mr. Fishleigh, and if it will help any during the course of the discussion I would like for you to consider the actual clamp itself and also, if it will help the large drawings of the Deere 650 clamp. A. In case we should need them, I will put an enlarged drawing of the Deere 650, which we had prepared, on the easel. It has been marked for identification as Defendants' Exhibit 26.

Q. Now, at the very outset before we start the discussion I would like to bring out, on the drawing of the Deere 650 clamp in Fig. 2, is there any part which is not oriented as it should be? A. Yes. Inadvertently in making this drawing we got the spring seat member 59 turned around. We worked from a sample of it and it is possible that it was misplaced when it came to us. Anyway, we did that and it should be just the reverse so that this little

projecting flange which now appears at the lower right should be over and contacting the top of the member.

Q. That particular feature was brought out on the plaintiffs' case. As we have it in the drawing, the spring seat washer is situated as I have now placed it on the clamp? A. That is correct.

[587] Q. Whereas it should be oriented with the depending lug element on the edge at the rear, should it not? A. That is correct.

Q. Does the fact that the washer is turned around in the drawings have any bearing whatsoever upon the consideration of the mechanical elements as we will come to them in the following discussion? A. No, it does not have.

Q. All right. Now then, will you go ahead with an analysis of the mechanical elements of Claim 1 as they apply to the Deere 650 clamp. A. Incidentally, the left-hand portion of this chart, except for the title at the top, is the same as and, in fact, is a photostatic reproduction of the similar chart which we previously discussed in connection with Claim 1 of the 798 structure.

The introduction and the first element in their general terms I have said yes, that is present in defendant's structure, the 650.

The second element, a fixed member, I have said no, and that "no" goes to the portion of "a longitudinally extending underface terminating forwardly of the transverse member," and my reasons therefor are expressed in the note as follows:

"Defendant's 650 Series Structure does not [588] have a 'longitudinally extending underface' on the Fixed Bracket Member, in the Graham sense.

"In Graham the Fixed Member 11 has a long Underface 60 which is held in clamping engagement with the similar long Upper Face 59 of the Plate Portion 51 of the Movable or Shank Attaching Part 12." That is the long face which extends from near the pivot point clear to the right-hand end of the fixed member in Graham.

"In Defendant's structure there is no portion of the Fixed Member 15 which is structurally similar to the Graham Underface 60. Moreover, there is no portion of Defendant's Fixed Member 15 which is normally held in

contact with any portion of the Shank-Attaching Member 35." And we will remember that the stop function here is provided as between the lug 44 on the right-hand end of the fixed member coming down and contacting the right-hand or forward end of the shank 14 as shown here at the right end of the Fig. 2 where I am pointing to it presently.

Q. Mr. Fishleigh, giving consideration to the prior art that has been considered here and giving consideration to the manner in which a specification of the longitudinally extending underface entered into and came into this claim and the prosecution of this patent and the [589] specification as set out in the file wrapper of the functions performed by that face, did you feel that the longitudinally extending underface is properly to be considered as an element, a structural element in the 798 specification? A. I feel definitely it is a structural element or at least a limitation on the fixed member which cannot be slid over lightly, and in view of the prior art and in view of the file wrapper proceeding, I believe that no mechanical equivalence, no range of equivalence could properly be given which would extend far enough to cover a structure that is not in this sense a longitudinally extending face, but merely the bottom of a lug, and which does not contact the pivoted member directly at all. So I have no hesitancy in saying no.

Continuing with the note, "On the contrary, the lower portion of the Lug 44 on Defendant's Fixed Member 15 is yieldably held in direct contact with the forward end of the Tool Shank at Standard 12.

"Defendant's Fixed Member has no Ears which extend rearwardly from any Under Face of the Fixed Member which is the same as or similar to the Graham Underface 60." Again, that refers to the fact that in the first place there could be question as to [590] whether there is any part of this fixed member which can properly be said to be ears, but in any event they do not extend rearwardly from any end of a fixed member as they do over in Graham 798 where the underface, the horizontal faces end at the point to which I am now pointing, just to the left of the left-hand end of the frame member, and those ears extend from that point.

Q. It would certainly be recognized, of course, that the Deere 650 has a portion of the fixed member which does mount pivot pins? A. Oh, certainly.

Q. And performs a function? A. Certainly.

Q. Pass on then to your next portion. A. The third element I have said "No" to, it deals with the shank attaching member, and of course in the broad aspects there is a shank attaching member in the 650 structure, but I have said, "No" because of the specific limitations and my note indicates, "There is no Upper Face on any Elongated Plate Portion of defendant's Shank Attaching (hinge) Member 35 which corresponds with and is normally in contact with any underface of its Fixed Member 15. Moreover, there is no part of the Hinge Member 35 which contacts the Fixed Member 15.

[591] "In defendant's 650 Series Structure the Forward End 14 of the Tool Shank 12 is yieldingly held in contact with the lower portion of the Lug 44 on the Fixed Member 15 to maintain the normal plowing depth of the tool." In other words, there is not on the shank attaching member any upper face which, as the element indicates, corresponds with and is normally in contact with the underface of the fixed member.

Now, as over in 798, where that wording is literally and functionally true and applicable to that structure and it differs completely from the arrangement in the Fig. 2 structure.

Q. The Fig. 2, you mean Fig. 2 Deere 650 structure, do you not? A. Yes, I do, toward the right of the Defendants' Exhibit 28.

Q. All right. Now then, the specific language of that element of the claim with respect to contacting faces we have already pointed out in connection with the file wrapper consideration, and what is your opinion as to whether it should be given some application, considering the file wrapper history and the prior art? A. Well, considering the file wrapper history particularly and as it developed because of some of the prior art, even some that in my opinion is less directly pertinent [592] than some here, in view of that I believe that it is a definite limitation which cannot be disregarded, for which the structure

shown in the Deere 650 cannot be reasonably said to be a mechanical equivalent.

Q. All right. Pass then to the next element. A. The next element, "Means connecting the elongated plate portion with the shank for maintaining the upper face of the shank in constant continuous contact with the underface of said plate portion of the shank attaching member."

As I pointed out previously, the structures which provide the response for that element consist both of the bolt 56 and the depending loop 57 in 798, and I have said no, there is not in the 650 structure any means which is the same as or the equivalent of that combination of two members or two elements, both of which are required to provide the functioning called for in element 4.

My note indicates, "Defendant's 650 Series Structure has no means connecting the Hinged Member and the Tool Shank which is the same as or the equivalent of, the Graham Bolt 56 and Depending Loop 57. Both of these parts are essential in Graham to maintain the upper face of the shank in constant continuous contact with the underface of the Shank [593] Attaching Member." Both of them, incidentally, are for fastening the shank directly to the hinged member.

Continuing:

"The Bolt 41 is the only means in Defendant's structure for connecting the Shank 12 to the Hinged Member 35. The Bolt 41 does not maintain the Shank and the Hinged Member in constant continuous contact along their entire corresponding faces during all stages of operation. Excessive movement or rebound of the Shank is prevented by the Cross Piece 77 extending between the Side Wall Sections 17 and 18 of the Fixed Lower Bracket 15. This is radically different both structurally and functionally from the Graham Depending Loop 57 which is an integral part of the Shank Attaching Member."

As to the fifth element—

The Court: Right there, I would like to see the Deere 650 series, understructure 77, as it pertains to the underface of the shank.

(Said structure was exhibited to the Court.)

The Court: That shank just rests on this lower portion of the fixed piece there, rotates on that?

Mr. Morris: It does not rotate on that at all, Your Honor. Again without testifying, it is our position that the piece there is merely a supporting [594] piece, the shank doesn't rock on it, doesn't rotate on it, it doesn't move along with the shank. It is a stationary element.

The Court: Does the shank rest on it?

Mr. Morris: Well, actually—I probably ought to put that in evidence by testimony of another witness. But no, it does not rest on it in its normal position. There is a deliberate clearance provided so that the shank does not rest on that element even in its normal static position.

Q. Will you pass to the next element then, Mr. Fishleigh, of the chart. A. The next element, the transverse pin, and there is of course the transverse pin in the Deere 650 upon which the hinged member pivots, but I have said "No" to the element because of limitations following, and my note indicates the following reason therefor:

"Defendant's 650 Series Structure has a Pivot Pin 19 which connects its Hinged Shank Attaching Member 35 to the Fixed Lower Bracket 15. However, Defendant's Structure has no normally contacting faces (or other portions) between the Fixed Member and the Shank Attaching Member. Hence, the Pivot Pin is not at the rear ends of any such faces."

In other words, the element called for the [595] transverse pin connecting the shank attaching member to the fixed member at the rear ends of said normally contacting faces, and I have checked that back and the only normally contacting faces which are mentioned are the faces of the fixed member and the shank attaching member. In other words, as indicated up in Element 3, "an upper face corresponding with and normally in contact with said underface of the fixed member." That is the only place that that reference is and it must, in my opinion, be the antecedent for this reference in Element 5.

Then the last element, 7, means having connection—

Q. First, element 6 of course you have answered "Yes," and that is the spring element, clearly present in Deere

650, is that it? A. That is right. But it provides that these are means for maintaining the "normal contact of the upper face of the plate portion of the shank attaching member with the underface of the fixed member to maintain the normal plowing depth of the ground working tool."

I have said "No" clearly, and my note indicates that "There is no contact, in Defendant's 650 series structure, of any portion of the Shank Attaching Member 35 and the Fixed Bracket Member 15.

[596] "On the contrary, the Forward End of Defendant's Shank 12 is normally maintained in direct contact with the lower portion of the Lug 44 on the Fixed Bracket Member 15 to maintain the normal plowing depth of the tool," and consequently there are no means for holding the two surfaces or faces together as called for in this element.

Q. Mr. Fishleigh, as we have previously mentioned, perhaps in another connection, but element 7 is another one of the elements which is a so-called means element, is it not? A. That is correct.

Q. For which there is no specific structure defined but the element is in terms of the function which it performs? A. That is correct, sir.

Q. When the element is defined in that fashion, do you feel that there is a fair response in a structure to the element if those functions called for are not performed? A. No.

Q. And substantially in the manner as specified? A. No, I do not. Not only that, but it must be limited to the structures shown in the patent in suit and mechanical equivalents thereto. It can't be any old structure which happens to perform that function if it is not a proper mechanical equivalent therefor, that is, [597] proper mechanical equivalent of what is shown in the patent.

Q. Of the structure as shown in the patent? A. That is correct.

Q. Now, if we disregard certain of the specific limitations of the elements, mechanical elements as set out in the claim, would you find a response for those mechanical elements in any portion of the prior art, any one element

of the prior art, without any modification whatsoever? A. Yes. I have indicated on the chart that if those elements be broadly construed in an attempt to find the response of the accused structure by disregarding certain of what I believe are critical elements, in the light of the travel of this patent through the Patent Office, then they would find a response in the Glencoe structure.

Q. I wonder if for purposes of—well, you say you have that set out on the chart? A. Yes.

Q. Is that the Glencoe device on the right-hand side and then the note down underneath the Deere 650 disclosure? A. Yes. The note underneath the drawings of the Deere 650 indicates the things that are to be disregarded and the note runs over to indicate, as it says at the end, "Then the mechanical element would likewise find [598] response in the Glencoe prior use structure."

Q. Now, I would like to consider that matter with some particularity. I would like to take Claim 7 from the file wrapper as it exists—I prepared a separate exhibit here for ease in handling, which I marked as Defendants' Exhibit 8-D. I would like for you to take that claim, which does not contain the specific limitational language with respect to longitudinally extending faces, and so on, which we have been discussing here, and tell me whether or not you can find the mechanical elements as set out in this Claim 7 present in the Glencoe structure without any modifications at all. A. Shall I take it up element by element?

Q. Take it up element by element and give us your opinion on each of the elements as you have them set out there. A. "In a plow having a frame and a ground working tool provided with a shank adapted to rock relatively to the frame when the plow is in operation in a forward direction.' Clearly Glencoe is a plow and it does have a frame, the portion "C" colored violet, as shown in Defendants' Exhibit 17, and the shank 19 is adapted to rock relatively to the frame when the plow is in operation in a forward direction.

"a mounting for attaching and supporting [599] the shank of the ground working tool from the frame including—" Well, certainly there is a mounting referred to generally by the letter A.

"1. a part adapted to be fixed to the frame." That is the fixed portion colored yellow in Defendants' Exhibit 17.

"—and having

"a. spaced apart depending flanges to form a downwardly opening way to receive an end portion of the shank"—those are the downwardly—the depending flanges 6, as shown in Defendants' Exhibit 17.

"b. spaced apart ears extending rearwardly in substantially aligning registry with said flanges,"—those are the flanges or the ears, rather, shown at the lower portion and they do extend from that—substantially aligning relationship with the depending flanges which form the way and the ears out here going on from that in much the same manner as shown in the 798 drawings.

"said mounting also including a movable part having a transverse ear between said spaced apart ears of the fixed part."

Q. Stopping at the introductory part, before coming to "a" part, "said mounting also including a movable part," would that obviously be present? A. Yes. In the dark green movable or hinged or shank [600] attaching member 21.

Q. Go ahead with the fu.. .er limitations of that element. A. "a tranverse ear between such spaced apart ears of the fixed part," that would be the ear not numbered specifically in this structure but the ear in which the hole 7 is placed which permits the pivot pin 8 to pass through, and that is right opposite the flanges or the ears on the fixed part.

Q. As shown in the actual device? Would you point it out, please? A. Yes. This part that I am referring to is an ear, reinforced at the sides by flanges, but it has the same kind of an ear that is referred to here in the patent in suit.

Q. Part b. A. "a shank engaging portion extending in said way." Here the shank engaging portion is the upper portion of the hinged member or shank attaching member, and it is provided for engaging the bottom face of the shank.

Q. Element 3. A. "a pivot pin extending through said spaced and transverse ears for pivotally connecting the

movable part with the fixed part." Now that is true, the pivot pin 8, colored light blue, does extend through the two ears, and the two—well, projecting down from the two side flanges 6 and also through the ear on the hinged or shank attaching [601] member.

Q. Number 4. A. "means connecting the end portion of the shank to the shank attaching portion." And that would be found in the bolt 32 and the stirrup 29, which do connect the end of the shank to the shank attaching or hinged portion, and incidentally they are substantially the same device, a bolt and a stirrup arrangement, the same type of device as shown in the drawings of the 798 patent.

Q. And element 5. A. "resilient means connecting said part to hold the movable"—

Q. I believe that should be plural, said parts. Let me check that to be positive: It should be plural. "Resilient means connecting said parts." There should be an "s" on there. A. All right. "resilient means connecting said parts to hold the movable part in yielding contact with the fixed part so that when the shank is rocked the end portion of the shank will cause the movable part to move downwardly within said way along with said end portion of the shank and back to contact with the fixed part."

Now, all of that describes perfectly the [602] arrangement in Glencoe. that is, the resilient means being the spring means and the connecting bolts. They do hold the movable part, that is, the Glencoe member 21, in yielding contact with the fixed part so that when the shank is rocked the end portion of the shank, that is. this portion 19, as shown in Fig. 2, will cause the movable part to move downward. As that is rocked, that causes the movable part to move downwardly within the way, that is, the way between the flanges and ears of the fixed part, along with said end portion of the shank and back to contact with the fixed part.

Q. Mr. Fishleigh, in that claim which was originally in the application and was rejected and canceled, there is none of the specific language of limitation defining the structural elements as we just discussed them in Claim 1 of the patent, particularly with respect to the longitudinally extending underface of the fixed member or the upper face

of the hinged member which is normally in contact with the underface of the fixed member, is there? A. There is no such recitation and that of course carries over into some of the other elements where—like these last elements, where here in original Claim 7 or application Claim 7 it merely indicates that the hinged member will come back to contact with the fixed part [603] generally, whereas in the last element in Claim 1 it provides that it will come back to proper contact between the longitudinally extending face and the underface of the fixed member and the upper face of the hinged member.

Q. If those particular structural limitations, as set out on Claim 1, are disregarded then we would come back, as you have already stated, to a direct application of the mechanical elements in 798 to the Glencoe structure without any modification of it? A. That is my understanding of it, yes, sir, and that is what my note indicates.

Q. Now then, turning your attention to—let's see, I believe Claim 1 is the only one charged as to 650, so let's turn our attention to the Deere 100 structure, and again consider the mechanical elements of Claim 1 in reference to that structure. First, before you start that, have you prepared the drawings of 650 which are shown on the fly of the exhibit? A. Yes, and those are the same—now, are you asking about 650?

Q. I beg your pardon, 100. Excuse me. We have already covered the 650. I am talking about the drawings of 100 which are on the fly parts of the exhibit. A. The drawings of 100 were prepared and have been marked [604] as Defendants' Exhibit 27. They are presently on the easel.

Q. Were those drawings made in your office? A. Yes.

Q. Under your supervision? A. That is correct.

Q. And made to reflect the actual structure of a Deere 100 clamp which you had there? A. Deere 100 clamp.

Q. Which you had there? A. That is correct.

Q. And in your opinion were they accurate disclosures of the actual disclosure of the clamp? A. Yes, they appear to be, and I found no discrepancy in them.

Q. All right. Then go ahead with the discussion of the mechanical elements of Claim 1 in relation to Deere 100. A. The first element to which I have said "No" is the second element. The fixed member deals again with the longitudinally extending underface. It will be recalled that in this structure there is nothing on the fixed member which is the same as or similar to the longitudinally extending underface, that is, a relatively long and relatively wide underface, flat [605] longitudinally extending face of the fixed member, as shown in 798. There is nothing of that sort at all. There is no contact between the fixed member and the pivoted member directly, the only contact being down through an area marked 25 where the hinged member does comes in contact with the frame member 1 and provides at that point the stop means for properly locating the plow at normal operating conditions.

But in view of the circumstances of the allowance of these claims or the amendment of these claims in the file wrapper, I cannot agree with the testimony that has been given here that it is proper to construe the frame member of the plow to which this clamping member is attached and to which the clamp is supposed to attach the shank, I cannot consider that that is the same as or the equivalent or can be used in providing a response in a structure where there is clearly no contact between the hinged member and the fixed member themselves. So I have said "No" to that element and my note points out the material which I have just suggested.

Q. Excuse me just a minute. In that connection, with the stopping or positioning of the shank in its normal operating position by means of a contact with the frame member of the plow, do you find that disclosed in [606] segments of the prior art? A. Yes. Yes, that is old in the prior art.

Q. For example, of those that we had on the easel here earlier, those contained in the chart, Defendants' Exhibit 11, is there an example where the stop is actually against the frame of the plow? A. Yes—well, in Dunbar the stop is between the hinged member and the frame of the plow, and in Cobb the stop is between the shank member and the frame of the plow.

Q. Now, go ahead with your explanation, please. A. I have said "No" to Element 3. There is of course a shank attaching member in the Deere 100 series, but it is not a shank attaching member which has an upper face corresponding with and normally in contact with any underface of the fixed member. So my note indicates that that is the basis for the "no", there is no longitudinal surface here which contacts the fixed member, and I do not believe under these circumstances it would be proper to construe as an equivalent situation or a mechanical equivalent structure a contact as between the pivoted member and the frame member, when this limitation was put in under the circumstances it was and is as explicit as it is.

Now, as to Element 4 I have said "Yes," because in this situation there is the bolt 13 and the [607] stirrup 11 which correspond quite closely to the bolt and stirrup they have used for connecting the elongated plate portion with the shank in the 798 structure.

Element 5, I have again said "No." There is of course a transverse pin, but it is not for connecting the shank attaching member to the fixed member at the rear end of the normally contacting faces. In the first place there are no normally contacting faces between the fixed member and the hinged member, and the pivot is not even at the rear of the portion 25 where the hinged member contacts the frame member to provide the stop. So there is a substantial variation and unless that distinction is maintained I believe that the structure would run into the prior art.

And the last element, 7, means for connecting the forward end of the shank with the other end of the coil spring, and so forth, is substantially—finds the same basis for the "no" that we found in the 650. That is, again there are no underfaces of the fixed member which contact the upper face of the hinged member. And here again I have indicated that if the mechanical elements be broadly construed—in other words, carried back to something similar to the elements of Claim 7, original Claim 7 that we just discussed, if that degree of breadth be given to the elements we would then [608] find a complete response for those mechanical elements in the Glencoe prior use structure.

Q. Turn your consideration then to Claim 2 of the patent as it relates to Deere 100. A. I have prepared a chart, which is on the easel, and marked as Defendants' Exhibit 29, covering the presence or absence of the mechanical elements of Claim 2 in the Deere 100 series structure.

Q. Now, down through those elements which are, as far as they are worded, precisely the same as Claim 1, of course the distinction would be the same. There is no need to discuss them further. So I would like for you to take up where the departure in the elements commences in Claim 2 and consider only from that point forward. I believe that would be in Element 3 is where our language starts changing. A. Well, yes, but I don't believe that in this instance the changing portion there—

Q. I understand that, but since the language of the element in Claim 2 is not precisely the same as the corresponding numbered element of Claim 1, I would like for you to indicate your opinion as to why there is no response in the Deere 100 structure. A. Well, as the note indicates, "There is no Upper Face on any Elongated Plate Portion of Defendant's Shank [609] Attaching Member 8 which corresponds with, and is normally in contact with, any Underface of its Fixed Clamp Members 2, 3. Moreover, there is no part of the Hinge Member 8 which contacts the Fixed Members 2, 3.

"In Defendant's 100 Series Structure, the Shank Attaching Member 8 is yieldingly held in direct contact with the frame Member 1 to maintain the normal plowing depth of the Tool and never touches the Fixed Clamp Members 2, 3 at all.

"Defendant's shank attaching member 8 has no lug disposed above the plane of any 'underface' of the Fixed Clamp Members 2, 3."

In other words, that is a place of departure in that in this claim it calls for the shank attaching member having a lug and dropping down, disposed at the rear ends of the plate portion and above the plane of the underface of the fixed member. The lug is not above any underface of the fixed member in the Graham 798 sense.

Now, the last two elements I believe are again comparable to the elements of Claim 1 and the note indicating that if the mechanical elements are so construed, broadly construed as to read on the defendant that they would then lead toward the prior art and find [610] a response in the Glencoe structure.

Mr. Morris: You may cross-examine.

Cross-Examination by Mr. Gold.

Q. Mr. Fishleigh, I believe you stated that you or your firm had done product engineering on new products. Tell us on how many inventions have you had patents issued? A. None, sir.

Q. Are you admitted to practice law? A. Yes, sir.

Q. You stated you had done some consulting work for agricultural companies. Would that be in connection with chisel plows? A. Well, my only work with chisel plows specifically dealt with the Jeoffroy work and the work here, but it did involve rather extended work in both instances.

Q. I believe you said you first became acquainted with chisel plows in the fall of 1950? A. Oh, it was I think perhaps somewhat earlier than the fall, although somewhere in around that neighborhood.

Q. And when you mentioned that you had observed some of the prior art in operation you weren't referring to such devices as shown in the Rix patent or the Cobb patent? [611] A. No, I was not referring specifically to those, no, sir.

Q. You have never seen those in operation, have you? A. Not ones that I knew to be those, no.

Q. In the first Graham-Jeoffroy suit, I believe you stated that there were two patents involved in that suit? A. Yes, that is my recollection of it.

Q. One of those was the 811 patent? A. That is right.

Q. And it was held valid and infringed by the Court in that suit? A. That is correct.

Q. And the structure that was held to be an infringement of the 811 patent was this Jeoffroy SC-580 clamp, Defendants' Exhibit 2? A. Yes, sir.

Q. In that same suit some of these same prior art patents were discussed by you, were they not? A. Well, I wouldn't be surprised, but I haven't refreshed my recollection as to what the prior art was there, but I would suspect there might have been some that were similar.

Mr. Morris: If there are any you would care to call out, Mr. Gold, we will be happy to stipulate whatever was considered there.

Q. (By Mr. Gold) Have you ever been in Deere & Company's [612] patent department? A. Yes, I was in their office a very short time one day, perhaps three quarters of an hour, half an hour.

Q. Did you see the library of patents? A. Not in any detail at all. As we passed the door it was pointed out to me, but I was not taken through it.

Q. How many employees do you have in your consulting engineering firm? A. There are four of us at the present time.

Q. How many are draftsmen? A. One.

Q. Is your brother still head of the firm? A. My brother passed away in 1947, sir.

Q. How many ladies does your firm employ? A. One.

Q. Can you explain what is meant by the term suction in connection with plows? A. Oh, I think I can, in a general way.

Q. Would you do so? A. Yes. If a plow point is put in the ground or is headed up it will not tend to penetrate, whereas if it is put in the proper position or tilted down a little, it will tend to go down into the ground to the proper working depth, be drawn down to the proper working depth.

[613] Q. Is suction important when a spike is used on the lower end of a plow point? A. I don't think it is as important, certainly as when sweeps are used, for example, or other structures.

Q. Are you admitted to practice before the United States Patent Office? A. No, sir.

Q. You don't know how many patents the Patent Office Examiner considers in regard to a patent application, do you? A. Well, not in any particular instance, no.

Q. You wouldn't know whether it was 500 or more, would you? A. Well, I am sure that it varies. I haven't been there and watched them, but I am sure that it varies from a very few in some instances to a very considerable number in other instances.

The Court: * * * Court will be in recess until 10 a.m. tomorrow.

(Adjournment.)

---

[614] MORNING SESSION, MONDAY, MAY 7, 1962

CLARENCE T. FISHLEIGH resumed the stand and testified further as follows:

Cross-Examination by Mr. Gold (Continued).

Q. Mr. Fishleigh, I believe you stated you have not had any patents issued to you? A. That is right.

Q. Actually you have not even been shown as a co-inventor on any patent, have you? A. No.

Q. In what state are you licensed to practice law? A. Michigan and Illinois.

Q. Your work in 1950 relative to chisel plows was merely observing a few demonstrations, wasn't it? A. Oh, I wouldn't quite say observing them. I would say conducting some work riding plows and indicating what was to be done, what conditions they were to be run under, and then of course observing the tests that were conducted by the plaintiff in this litigation out at the Graham farm.

Q. They were demonstrations of the Graham 811 structure and the Jeoffroy SC-580 structure, were they? A. Yes.

* * *

[617] Q. (By Mr. Gold) Now, you mentioned some model of a device that you suggested that was in the first Jeoffroy case. Tell us what kind of model that was. A. Well, my recollection of it is that we took one of the 811

devices—I haven't seen it now for 11 years and don't recall precisely, but fastened the shank to the hinged member and also put a plate over the pivot sections so that we had a fixed enclosed pivot for the hinge instead of the slot arrangement of the 811, to show what would happen, to show the functioning, as for [618] as the courtroom demonstration was concerned, of the 811 structure with the shank fastened to the hinged member.

Q. And the shank was still between the fulcrum plate and the fixed member? A. Yes.

Q. You used two bolts through the plate and the shank, did you not? A. That is my recollection of it, yes.

Q. That was in an effort to show the Court there wasn't any longitudinal movement necessary between the fulcrum plate and the shank in the Jeoffroy structure? A. Well, that was part of it, to show that the device would operate satisfactorily under those conditions.

Q. You used two bolts in a similar manner to what Drader, et al., has in Patent No. 417,775? A. I am not sure—what is the number of that patent?

* * *

A. Well, in a very broad sense only. Drader I see does show a connection between the shank and another member by means of two bolts or two rivets.

* * *

[619] Q. You indicated that in your opinion the 811 structure was a poor design? A. I have no hesitancy about that, sir, I think that is true.

Q. You also indicated that it was subject to a lot of wear? A. I think that is also true. That has been my observation of it in the field, both in 1950, '51, particularly '51, and also more recently. I think I could go so far as to say that out of—oh, a dozen or more plows having in the neighborhood of a hundred or more tools that I have never seen one which was not worn rather substantially.

Q. Of course you will agree that the Deere 650 and 100 series spring clamps wear also, wouldn't you? A. Any machine part wears, so the answer to that is yes, but by degree quite noticeably different. I have seen plows that had been in the field a considerable time that showed very

little, if any, wear of the Deere 650 type, whereas, as I say, I have never seen an 811 type structure which had been in the field as much as a year [620] that didn't show very substantial wear.

Q. The pins will wear in both the Deere structures, won't they? A. Oh, yes, certainly.

Q. They wear substantially? A. That will depend upon the care with which they are maintained and the amount of wear. Any part will wear out in due course if it is used hard enough.

Q. You have seen them where they would slide loose on the pin, could be moved around, up and down? A. Well, not as loose as you indicate. I have seen them with some slight looseness but not perhaps as much as you indicate with your hands.

Q. You just saw very slight looseness? A. Relatively slight, yes.

Q. Any two faces that operate together will wear, won't they? A. In what sense do you mean operate together? Come together or slide together or what?

Q. Either way. A. Well, in a good design there will be relatively little wear in two faces that come together if the faces are broad enough or large enough to absorb the effect. If the faces are small enough and the force great enough there may be a wear or peening type of action. [621] Q. You have been testifying here primarily as an engineer, haven't you? A. Well, as an engineer, but I believe what is frequently referred to in these cases as a patent expert.

Q. In these plows that we have under consideration, such as the Graham 798 structure and the accused structure, the tool carrying shanks have a certain amount of resiliency and flexibility, do they not? A. Yes.

Q. Under shock loads there is some bending in the shank, isn't that true? A. I didn't get that.

Q. Under shock loads there is some bending in the shank, isn't that true? A. Do you mean bending in the sense of a permanent bend or just the resilient bending?

Q. There can be both, can there not? A. Well, there can be if the load is great enough and if no—not so likely

to be in plows with the spring clamps. But otherwise—that is, the test is simple enough. If the bending which does occur exceeds the elastic limit of the shank it will take a permanent set. If it is within the elastic limit of the shank it will come back to its normal position ordinarily.

Q. In normal operation there is continually some bending [622] within the elastic limit of the steel, is that right? A. I believe that is correct. I believe that is intended in this type of plow.

Q. You have seen shanks though that have been bent and straightened out to some extent, haven't you? A. Yes, I think I have seen one or two such instances. However, those particular ones occurred under testing conditions where we subjected them to far greater loads than would be expected to be encountered.

Q. So you didn't see any shipped in from the field that some farmer had straightened out? A. I don't recall at the moment, although it is quite possible.

Q. In such a device as we are considering here it would be undesirable to have all of the bending stress of the shank concentrated at one point, isn't that right? A. Oh, I think that is generally true, yes, sir.

Q. If the bending stress is concentrated at one point then after a period of use there would be a tendency for fatigue or crystallization that would cause breakage, is that right? A. Well, if you could concentrate it at one point in a device of this kind I think that is probably true, that is, that is the way, for instance, if you take a piece of tin and you want to break it, for example, you [623] do concentrate the twisting back and forth at one point and sooner or later it will break and under those conditions quite relatively sooner. I had occasion to do that sort of thing with one of these little things you use in a garden last weekend, so-called Twistems, where I wanted to break it I just took it closely and bent it sufficiently at the one point until it broke.

Q. You concentrated the stress at that one point? A. That is right, and not only concentrated the stress but gave it abnormally high stress for what it was intended by bending it far beyond its elastic limit.

Q. If the bending is concentrated at one point it doesn't have to be bent beyond its elastic limit to cause crystallization, does it? A. Oh, if you concentrate the bending at the one point it simply has the effect of increasing the bend. It isn't so much that it is at one point as it is that if it is at one point it is a greater stress normally and will wear less or shorter time than if it were subjected to a lighter load. But if you give it the same total stress at one point or the same total stress throughout it, I believe there isn't too much difference, that is, the same total stress at one point or that same amount of stress per unit of space over the whole thing, it would all wear out.

[624] Q. You say wear out? Are you distinguishing between fatigue or crystallization? A. No, I am not thinking of wear in the sense of rubbing wear, I am thinking of it in the sense that you are speaking of it, fatigue or crystallization.

Q. You do agree that the 798 patent is effective as an operative structure, do you not? A. Oh, I think one which is operative. I am not sure about it being operative in the way that it is described, but I think it would work.

Q. The Jeoffroy HT-5 was an operative structure, was it not? A. Yes.

Q. And commercially successful?

Mr. Morris: We have stipulated that, Mr. Gold.

Mr. Gold: I would like for the witness to answer my question.

A. Well, I have no personal experience as to the extent of use of the HT-5. I know or have heard that it has been built and assume that it would be called commercially successful, but I haven't had personal experience with it.

Q. Will you refer to Defendants' Exhibit 21-C? Do you have a copy of that? A. What is it? Yes, I have a copy of it here. That is [625] Sheet 3 of the drawings, is it?

Q. Yes, sir. A. Yes.

Q. Can you tell us the purpose of the engagement of the upper face 59 of the plate portion 51 with the underface 60 of the fixed part 11? A. I believe I could.

Q. Will you do so? A. Those numbers I believe don't appear, do they, on this sheet?

Q. Possibly they do not.

The Court: I wonder if you would repeat those numbers. I couldn't follow you on that.

Mr. Gold: Maybe we should also look at the Exhibit 21-D.

Q. (By Mr. Gold) My question was, what is the purpose of the engagement of the upper face 59 of the plate portion 51, that is the plate of the hinged member, with the under face 60 of the fixed part 11? I believe those are the ones you have colored red, Mr. Fishleigh. A. Yes. Now, you asked me if I could tell you and I said yes.

Q. Will you do so. A. Primarily to provide a stop for the shank and the hinged member 51 so as to properly position the tool [626] in normal operative position, and to have rather broad extended surfaces so as to reduce what has been suggested in other instances as wear on other surfaces.

Q. In other words, it spreads the force of the impact over a large area so the unit stress from the impact is small? A. That is correct.

Q. Now, the fixed part 11 is secured to the beam or frame 1 so that they operate as a rigid total member, is that right? A. Well, I don't know about operate as a rigid total member. Certainly so that it is held fixed to the frame member and presumably doesn't shake loose. But it is detachable.

Q. When you put the fixed member on the beam it is particularly desired though—you want it to stay put, don't you? A. Certainly.

Q. And I believe you said that when you have small areas subjected to hard impacts there is a possiblity that the members could be peened over? A. Well, not necessarily peened over, but peened.

Q. That would be kind of like when you use a chisel and a hammer and you hit on the end of the chisel with the hammer it tends to peen, the chisel does? [627] A. Oh, it could. I had in mind more the situation that you get if you hit a surface with a hammer, which would have

a tendency to compress that surface, not necessarily bending over, although that could happen under some circumstances.

Q. It does on chisels, does it not? A. Yes, frequently.

Q. Now, tell us the function of the loop portion 57 in the Graham 798 structure. A. Well, as set forth in the mechanical element of the claim, it is in the specification itself, relatively little is said about it. I am reading from column 3, beginning in line 50, "The moveable part also includes a depending loop 57 having a rectangular passageway 58 substantially conforming to the cross sectional shape of the end portion of the shank whereby the end portion 8 of the shank is passed therethrough and embraced by the loop portion to rock with the moveable part of the pivot pin 48." But as set forth in one of the elements of Claim 2, that depending means or stirrup means 57 is said to cooperate with the bolt 56 in maintaining the upper face of the shank in constant, continuous contact with the under face of the plate portion, so that on that basis, that loop and the bolt cooperate to maintain the shank and the plate member in constant, [628] continuous contact, as illustrated in the drawing, Fig. 6, on—what was it, 21-C?

Q. Yes, sir. A. Even in the tilted position such as shown in Fig. 6, and of course as shown the same way in Fig. 2 on Defendants' Exhibit 21-A.

Q. Now, can you tell us from your observations of these types of devices the function of the loop in actual plowing operations? A. You mean if not built in accordance with this patent?

Q. No, sir, I mean where it has the loop on it in actual plowing operations, what is the function of the loop? A. Well, if built in accordance with this patent—or are you asking me about some specific other structure?—but if one were built in accordance with this patent it would do what I have just said, and of course in addition to that or as a part of that would resist any rebound, any tendency of the shank to move away from the hinged member after the end of the tool went over an obstruction.

Q. In plowing when the shank is in the ground the force would be upwardly and rearwardly and that force would

be tending to push the shank away from the loop, would it not? A. Tending to, insofar as the operation were uniform and [629] steady, if such an operation is ever possible. But to the extent that there is a flexing or vibration in it, resilient operation, I think it would be alternately up and down, the tendency, or the forces.

Q. Then the force would be applied against the loop only on the rebound or the downward force on the shank? A. Well, yes, in the ground or in plowing operation and if built in accordance with the patent I would think it would have a tendency to help at least, support the weight of the plow if the plow were out of the ground.

Q. And it would be cooperating with the bolt to keep the shank from separating from the plate in the downward rebound of the shank after hitting the obstruction? A. Under all circumstances it would be cooperating with the bolt to maintain the shank in constant continuous contact with the plate member.

Q. Even when the forces on the shank would force the plate away from the bottom loop? A. Well, it would be cooperating at that time. If there are no forces tending to separate it then it perhaps doesn't need any action. Neither does the bolt. If there is no tendency to separate them then they would stay put. But there would be few operating conditions under which there wouldn't be at least some stress from time to time and rather close together.

[630] Q. In plowing operations when would the bar on the fixed member under the shank of the Deere 650 series function? I am referring to this bar here, Mr. Fishleigh, (indicating). A. Only when there was a sufficient rebound to carry the shank beyond the clearance which is provided at that point.

Q. If you wanted to make a hinge member of the Graham 798 patent, you would cast it, would you not? A. Oh, I might. That would depend to a large extent on the number and one thing and another. If I were making one single one I probably would not.

Q. If you were going in production on plows, there would be large numbers made, you would cast it, would

you not? A. Oh, I think that would be a very logical way to do it, yes, sir.

Q. You would cast it in such a way that you wouldn't have anything to do in the way of machine work on it except maybe drill the hole through the hinge pin, is that right? A. Well, insofar as possible, that certainly would be a desirable goal.

Q. That would be the economical way to make it? A. Sure.

Q. The Jeoffroy device that came under the Graham 798 [631] patent had a cast hinged member, did it not? A. Why, I think so. I haven't examined it with that in mind, but I have no reason to doubt it.

Q. So there will be no question, Mr. Fishleigh, I show you Plaintiffs' Exhibit C. A. That appears to be such a member.

Q. A cast member? A. Yes.

Q. Deere & Company cast their members in both the 650 and 100 series spring clamps, do they not? A. In the present production, yes.

Q. Now, in the Graham 798 patent, tell us the position of the parts and the support of the shank with the tool out of the ground in traveling position. A. I would say it would be substantially as shown in—or as shown in Fig. 1 on Exhibit 21-A.

Q. And what would support the shank? A. Now, this is in 798?

Q. Yes, sir. A. The bolt 56, the loop 57.

Q. Now, if you would lower the frame relative to the wheels and place the structure in plowing position, starting the tools into the ground, what would be the relative position of the parts, particularly the supporting shank? [632] A. Well, if the ground was such, as it probably would be, that in that first operation the tool point didn't penetrate to any great degree, then it would tip the tool into some such position as shown in Fig. 6.

Q. And what would support the shank at that position? A. The bolts 56 and the loop 57, and of course the supporting—in all instances, even the preceding instance,

I should have pointed out that those two would be ineffective except for the contact with the hinged member.

Q. You mean the loop in that position would be ineffective? A. Well, if you didn't have—if you just had those two, as you indicated here the other day, out in thin air by themselves, they wouldn't be supporting anything. But the reason, in my first statement relative to Fig. 1, I said that the tool would be supported by the bolts 56 and the loop 57, but of course I should have gone further and said by means of them the shank is clamped to the plate portion of the hinged member, and the same thing is true when it is in the position shown in Fig. 6.

Q. Now, in the position shown in Fig. 6 there has been some force exerted upwardly and rearwardly on the shank, and that force has tended to compress the spring? A. That is correct.

[633] Q. Spring bolt? A. That is correct.

Q. So this force on the shank is tending to force it up against the part of the hinged member above the red shank right at the rear of the hinge member? A. Well, it is putting stress there. If it is in the position as indicated in the patent there is no opportunity for any movement, but there is a force applied, of course, against the plate to the hinge member.

Q. In that position the shank is being pushed away from the bar of the loop number 57? A. Only if there is clearance there, which is not indicated in the Graham 798 patent, but to whatever extent there is clearance under that condition it would be pushed up against the plate, held against the plate, and slightly away from 57.

Q. And with a cast part you would have clearance for the shank, would you not, through that loop? A. Well, if I had a cast part which I was making for production I probably would, because I wouldn't be concerned about the functioning as set forth here in the patent. But if I were actually making a clamp to function as set forth in this patent, then I would see to it that there was no clearance there. Otherwise [634] I would appreciate that I was not functioning as specifically called for in this patent.

Q. Then you would go contrary to the recognized economy of quantity manufacture of such device? A. What I

probably would do would be go contrary to this patent if I were going to manufacture on a production basis. But you are asking me in connection with this patent.

Q. Now, in that position the bolt at the forward end holds the shank against the plate of the hinge member, does it not? A. Yes, it does that in all positions.

Q. And that contact would be continuous? A. Which contact?

Q. Between the plate and the hinge member. A. At the front end only?

Q. Yes, sir. A. Yes.

Q. It would be constant? A. Yes.

Q. Now, if we had the plow tool in the ground and were plowing and the tool strikes a rock in the ground, what would be the action in the Graham 798 structure? A. Well, the point of the tool would tend to move back and up relative to the plow. That is, the point of the [635] tool actually would probably stay fairly stationary as far as forward and back is concerned, depending on the nature of the obstruction that was hit, or it might slide up and forward relative to the earth. But relative to the plow frame it would move upwardly and backwardly.

Q. And if the plow were traveling about six miles per hour and the rock were buried so it was immovable, the shock on that shank would be substantial, wouldn't it? A. Yes, sir.

Q. It would tend to bend the shank, would it not? A. Well, that would depend upon—there might be a tendency to bend the shank. It would depend in some extent on the stress or the force of the springs and the actual condition as to whether the point was free to move up over an obstruction or was actually held there. But there could be such a circumstance in which there would be a tendency, at least, to bend the shank.

Q. Not necessarily beyond its elastic limit? A. Well, that again—whether or not it was a little bit or a big bit would depend on the particular situation.

Q. Actually that shank could bend or flex clear up under the plate to the bolt at the front end of the hinge member, couldn't it? A. Are we talking now about some pro-

duction job I have [636] seen or one which I made up in accordance with or tried to make up in accordance with 798?

Q. Talking about some production job that would be made by anyone wanting to make such a device in quantities to sell on the market. A. Well, there might be a tendency to bend, but I think in fact it would be a negligible actual bending, that is, in the section between the two ends of the plate member.

Q. But there would be a tendency to bend or flex in that way? A. Oh, a tendency, but not a bending of any consequence, and in some instances not at all.

Q. When you say not of any consequence do you have anything in mind as to what would be of any consequence? A. Well, I would say that if there was a deflection of a few thousandths of an inch it would certainly be of no consequence. No one in operating them would know the difference under any circumstances.

Q. Of course it might make a difference in the stress in the shank of the plow, in its distribution? A. I don't believe that that amount would affect it in any way that one could detect even on an extended proving ground test.

Q. You recognize that a slight movement with a force can [637] materially reduce the effect of the shock, do you not? A. Well, we have got a tremendous amount of length of the shank which takes up that shock, absorbs part of it, and then we have springs in there that take it up. So that I am quite confident that the difference of any bending which might tend to occur there would be negligible.

Q. The movement the Ford Motor Company put in the front wheels of their car which moves horizontally in case of shock would be inconsequential as far as we are concerned?

Mr. Morris: Comparing some unknown structure not in the ordinary course seems to me totally irrelevant here. What movement there might be in some other product has no bearing on the movement that might be present in the patented structure or any accused structures, doesn't tend to prove anything.

Mr. Gold: If Your Honor please, I think it is well known that in any place where there are impacts or shocks a slight movement can materially reduce the force, like a boxer slightly moving his head to avoid or reduce the effect of a blow. This man doesn't seem to want to—

The Court: I think it is proper cross-examination. The witness is qualified as an expert. [638] The Court takes into consideration that there are no other devices in evidence such as mentioned. I think I realize the principle involved, the question to the witness concerning it.

Mr. Gold: In the Mercury and Ford products it was well publicized in '60 about the little bit of movement to reduce shock. I am sure Mr. Fishleigh would keep up with some improvements like that.

A. In answer to your question, in the first place, I am not familiar with the detail of any of that movement as to how much it actually is. There is no question that if you have two otherwise rigid bodies coming in contact, you have a shock, that a degree of movement could reduce the amount of shock. But what I am saying here is that when you have a structure which has built into it a coil spring arrangement in the first place to take care of the shock, plus the resiliency of the shank itself, that is the device that you are working with, which is a resilient member and absorbs those stresses in its own bending, that any movement or bending which might occur in the place that we are talking about, and particularly which could possibly occur if it were built in accordance with this 798 patent, I still say would be inconsequential and negligible, that is, that the actual tendency to move is so small as to [639] perhaps not be inhibited by devices—even in any device as built in accordance with this degree of clearance.

Q. Now, with the force acting on the shank upwardly and rearwardly in Fig. 6, there would be a tendency for the shank below the plate to move away from the plate, in other words, bend downwardly, is that right? A. Well, there might be what you call a tendency. In fact, I don't believe that it would move to any appreciable extent, and if it—

Q. I am talking about the forces and the tendency now, Mr. Fishleigh, will you stick with my question? A. All

right, and if it were built in accordance with 798 it could not so move.

Q. That would be where you would have a machined opening through the loop? A. No, I am talking merely about the provision in the patent which says that they must be kept in constant continuous contact. If they do move away, then they are no longer in constant continuous contact.

Q. If the shank moved away under the plate here it would still be in constant continuous contact with the bolt portion, would it not? A. One part of it would be, yes.

Q. So we would still have the constant and continuous contact at the forward end of the shank and plate? [640] A. Oh, at that end, but not the sort of constant continuous contact that is spelled out in the mechanical elements of the claims.

Q. According to your interpretation? A. Oh, I think on that there could be little question. I think some things are matters of difference of opinion; that one I think no reasonable opinion could be to the contrary.

Q. Now, with that tendency to bend under the plate, you could say that there would be a tendency to bend or flex through the entire length of the shank, is that right? A. Oh, I think there might be a tendency to do so. That is, there would be a force which, if the device were weak enough, might tend to bend it.

Q. Did you make an independent search of the prior art? A. No, sir.

Q. Actually it had already been searched thoroughly by Deere's patent department, hadn't it? A. I don't know anything about that.

Q. You just took the prior art that they told you about in your study of this case? A. Yes, I took the prior art which had been set up by the defendant in their answer or notices, or something or other.

[641] Q. Now I have placed the chart, Defendant's Exhibit 11, on the easel. Will you look at the illustration of Dunbar Patent No. 211,003. That is a harrow tooth, is it not? A. Yes.

Q. That is the harrow tooth mounting so that the tooth can be adjustable as to depth, isn't that right? A. Well, that is one thing that can be done, yes.

Q. The patent provides for that? A. Yes.

Q. Now, you have some elements that you have listed in a box just to the right of the Dunbar illustration. The wording for those elements, that is your own words, is it not? A. Yes.

Q. The dark green member in Dunbar is a shackle plate "D", is it not? A. That is the nomenclature in the Dunbar patent, yes.

Q. And as far as there being a shank for a groundworking tool, that is the tool itself, isn't it, the member "F"? A. Well, let's say an integral tool and shank in this instance, but it clearly in my opinion is a tool and shank.

Q. Dunbar describes it as a tooth? [642] A. Yes.

Q. Now, there can't be any flexing in the portion of that tooth above that shackle member, can there? A. Well, at least above the spring member I don't believe there would be any tendency for it.

Q. So any flexing would have to be below the shackle? A. Well, it would have to be between the top point of contact with the spring member and the bottom of the tooth.

Q. It would have to be where, Mr. Fishleigh? A. Well, certainly between the top of the contact between the tooth and the spring member and possibly, depending upon the direction, between the top of the shackle member or hinged member and the bottom of the tooth.

Q. And that would be up here at this point where I am pointing? Actually on your drawings or on this chart about a quarter of an inch above the dark green member? A. There certainly would be no tendency above that point.

Q. And your testimony is it could flex in the shackle part itself? A. You didn't ask me if it could flex, you asked me if there was a tendency to flex, or could be a tendency to flex, and I believe that under some circumstances there could be a tendency to flex between the top certainly of the hinged member or shackle bar and the [643] bottom of the tooth anywhere along there.

Q. And do you think it would flex in the shackle member? A. I don't believe that if properly tightened there would be any substantial flexing in that point.

Q. If it started to flexing it would tend to work loose, wouldn't it? A. Oh, that depends on how much there is and how the device was set up. If any substantial flexing in there occurred I think it would tend to work loose and would probably be loose. I don't think it is desirable.

Q. All that holds that tooth in place is the friction due to the clamping action between the spring and the shank and the shank and the shackle member "D", isn't that right? A. That is correct.

Q. If any looseness occurred the height or rather the depth that you could plow or harrow would be altered, wouldn't it? A. Well, if there was sufficient looseness so that the forces which were encountered would pull the tooth down, then of course the adjustment would be changed, or push it up, either one.

Q. It would be rather difficult to have forces in harrowing to pull the tooth down, wouldn't it? [644] A. Well, that is one of the things that I had in mind in saying that it wouldn't necessarily follow that any slight looseness would alter the position, but it might.

Q. The Dunbar structure doesn't look much like the Graham 798 structure, does it? A. You mean just in casual outward appearance?

Q. Yes. A. I wouldn't say that it just as a picture looks much like it. If I was thinking of it in terms of structural and functional features as an engineer I would see some decided resemblances. But just to look at it as a picture it would be different.

Q. And it doesn't look like either of the accused devices, does it? A. No, just as a picture, no.

Q. There is no coil spring in the Dunbar in the manner specified in the Graham 798 patent, is there? A. No, no coil spring in the sense of a spirally wound coil spring.

Q. You have never seen a Dunbar device in actual use, have you? A. Oh, I don't recall having seen one that I now recognize as such.

Q. You can't read either one of the Graham 798 claims on the Dunbar disclosure, can you? [645] A. You mean find a response for the mechanical elements in toto?

Q. Yes, sir. A. No, not literally.

Q. You could read it in some other manner? A. Not all of them. Certain ones I think quite certainly the elements are quite similar, but not all of them.

Q. Dunbar has a spring? A. Yes.

Q. Now, if you will look at the Cobb disclosure, I believe that is about in the middle at the bottom of the exhibit, Defendant's Exhibit 11, that patent also discloses the mounting of the harrow tooth, doesn't it? A. Discloses what?

Q. The mounting of a harrow tooth. A. Yes.

Q. You have used rather loose designations as to the parts in your statement of what that patent discloses, haven't you? A. Well, I don't know that I have. Loose as compared to what?

Q. As compared to what was actually disclosed in it. A Well, I don't believe so. I thought I was giving a reasonably accurate description of it, but if there is any place that you know of that I misspoke or improperly [646] spoke I would be glad to correct it.

Q. Now, I believe the Cobb patent describes the device designated with "a" as a bail, does it not? A. I believe it does.

Q. And that is fastened to a beam that is designated "B"? A. That is correct.

Q. And the member "D" that you color a dark green is pivoted on that bail? A. Yes.

Q. But you show the bail as a fixed member colored yellow, isn't that right? A. Yes.

Q. How did you determine your designation of the separate parts? A. My coloring of them?

Q. Well, in determining whether or not they were fixed members and movable members. A. Well, partially by observation of Fig. 1 where it shows the structure in its two extreme positions of movement, and as I see it there it shows that the member "D" and the tooth and its

shank "P", and the spring "c", all move, but in the course of that, at least as shown in this figure, the part "a" does not move.

Q. You actually took a broad designation of parts of the [647] Graham 798 structure, then selected some part that could be called by that designation in the various prior art on Defendants' Exhibit 11, did you not? A. Well, the first part I think is correct, and the latter part is that where I found a part which functioned in accordance with the functioning, broad functioning of the part as I had designated, I applied it.

Q. Now, in Cobb is the fixed part between the hinged member and the frame? A. I would say, I think, yes, generally. Of course the pivoted part goes around the fixed member, just as it does in many other situations, so that part at the lower end of the structure, I would have to say that a portion of the hinged member is between a portion of the fixed member and the frame.

Q. And there is no pivot pin as such shown in Cobb, is there? A. No separate pivot pin. The pivot pin or the pivoting member is an integral part of the bail or fixed part "a", no removable separate piece.

Q. Now, when you were looking at the Graham 798 patent awhile ago you said it had to be limited to a very specific structure, with practically no tolerance in that loop portion. Now you are taking a much broader look at this prior art of Cobb, aren't you? [648] A. Well, yes, I am simply—those elements do not purport to have—that is, that appear on this Defendants' Exhibit 11—do not purport to have all of the restrictions or limitations that are imposed on similar elements in 798. You are talking about them from a broader standpoint.

Q. Now, Cobb doesn't show any coil spring like Graham 798, does it? A. No, no coil spring. Shows a looped spring.

Q. Now, in that shank for the ground working tool again that is just the harrow tooth that the top shows, isn't it? A. That is right.

Q. The Cobb structure would have a rather limited swinging movement when it hit an obstruction, wouldn't

it? A. Oh, I am of the opinion that most any of these have somewhat limited swinging movement.

Q. Of course you have scaled patent drawings in the past to see how much they move or what size some part should be, haven't you? A. Well, the only time I have done that is when I am making a model of the device and even understanding that the patent drawings are not intended to be to scale, I normally try to follow the scale so as to avoid any criticism of having departed from it. But [649] normally they are not accurately to scale.

Q. The type spring in Cobb would tend to prevent the swinging of the tooth, would it not? A. I don't believe as much actually as the type of spring in 798. It is a coil spring, has a very definite bottoming position, and in this instance, this type of spring could swing, if properly constructed, to much greater degree than shown by the dotted or dashed line position in Fig. 1.

Q. And what would be the force characteristics of a spring such as Cobb as compared to a force characteristic of a coil spring? A. Well, the coil spring builds up its force as it is compressed in much greater degree, I believe, than a spring of this Cobb type would.

Q. A coil spring is more or less what you might call a straight line function, for each inch of compression you are going to add so much unit pounds? A. Yes, more or less, in its normal operating range that is intended to be.

Q. If you put on a hundred pounds to compress it one inch, then 200 pounds would compress it two inches? A. That is the general idea in the general range, in its operating range.

Q. Did you ever see a harrow having a structure disclosed [650] as the Cobb patent in actual use? A. I don't believe that I have, no, sir.

Q. I believe you described the operation of the Cobb structure. Is that operation set forth in the Cobb patent? A. Well, not in great detail but is illustrated in Fig. 1.

Q. You say not in great detail. The description you gave of the operation isn't in there at all, is it? A. Well, no, it doesn't specifically say that. That is, he leaves most

of that for a general understanding, even as of that date. He says his invention "consists in certain combinations of improved parts in that class of harrows which are provided with hinged spring-actutated shares." And then over at the other—in column 2, beginning in line 51, "A more prompt and unvarying spring action is thus obtained, as a better purchase is exerted on the spring thus located and secured in position to be contracted. Such a construction and combination of simple parts greatly facilitates the construction and operation of this class of harrows." And he shows it moving from one position to another, and even in 1883 I believe it would have been understood by a mechanic that it varied under varying conditions of load.

Q. And the only actual disclosure of any operation is in [651] Fig. 1 from the solid line to the dotted lines of the shank and spring.

Q. Now, will you describe the application of forces in harrowing operation on the Cobb structure. A. Well, under normal operation there would be a rearward—that is, with respect to the frame, a rearward force on the tooth of the harrow.

Q. On Defendants' Exhibit 11 that would be a force at the lower end of the tooth "P", which would be to our right? A. Yes, and to some extent in normal work, a downward force, if it were encountered, moderately heavy soil.

Q. That would be the suction? A. It would be similar to what causes suction and the resulting penetration.

Q. Of course in harrowing we are not too concerned about suction, we are merely trying to break up the clods aren't we? A. Oh, at least in harrowing that I did as a youngster, when we were loosening the soil and breaking up lumps as well, but we were also penetrating at least or desirous of penetrating at least to the two or three or even four inches that I have heard mentioned here.

Q. That would be previously plowed ground? A. Generally speaking, yes. At least not land that had [652] never been plowed. I never used a harrow for new land, but I have used them at times when it hadn't been plowed just recently.

Q. Now, this force that is going to be occurring on this tooth during harrowing operations, that would apply a rearward force on the upper part of the tooth toward the loop designated—or the bar of the loop designated with the letter "v"? A. That is correct.

Q. Actually maybe I had better not say that is designated the letter "v" because in the patent I believe the letter "v" designates the opening through that lower part of that hinge member. Is that right? A. If you found it, where did you find it? I don't seem to be able to put my finger on it.

Q. Right here (indicating). A. Yes, "closes the open side of the hook or recess v."

Q. So we will understand what we are talking about, I am referring to that part of the loop that is on the right-hand side of the tooth in the illustration that you have in Defendants' Exhibit 11. Now, the force in the harrowing operation is toward that loop bar, isn't it? A. Well, in the normal operation there would be a force [653] tending to push the—or pull, rather, the shank part of the tooth against that member.

Q. Now, that would be at the lower end of what you have designated a shank attaching member in your dark green color? A. Yes.

Q. That is just opposite to the direction of the force we talked about that would be applied to the Graham 798 structure in plowing operations, isn't it? A. Well, opposite in what respect? As far as the shank is concerned it is exactly the same. Opposite in what respect?

Q. So there will be no misunderstanding, Mr. Fishleigh, we will go back over it. We were talking about Fig. 6 in Defendants' Exhibit 21-C and the force in plowing would be upward and rearward on the shank and that force would be toward the plate portion of the shank attaching member or hinge member away from the loop, isn't that right? A. Yes.

Q. Now, in the Cobb patent the force applied to the shank is toward the bar of the loop and away from the plate portion of the shank attaching member? A. The force of the shank is exactly the same, but because of the

difference in position of the hinged member [654] relative to the shank, it is toward the loop in the one instance and away from the loop in the other.

Q. Now then. there would be a tendency in Cobb for the tooth to bend right below the loop portion of this dark green member, is that right? A. Well, not necessarily limited there. That is, there is a tendency for that shank to bend at all points from its bottom up to the bolt, a tendency for it to do so.

Q. How much tendency would there be in the portion above the loop? A. Well, in my opinion not a great deal. I would say other things being equal, if the parts were of the same size and length, about the same tendency as would be in one of the 798 if it were made in accordance with commercial practice.

Q. This tooth of Cobb is resilient to some extent, is it not? A. Yes, intended to be.

Q. Then when your force is applied in the harrowing operation that tends to force the tooth against the bar of the loop? A. Yes.

Q. And that tends to make a fulcrum point for that harrow, doesn't it, that harrow tooth? [655] A. Yes, just like the rear end of the hinged member makes a fulcrum point under those circumstances in Graham.

Q. Then when that tends to fulcrum about that point, then there is a tendency to force the part above that loop in Cobb, the Cobb tooth, against or flat against that plate portion, isn't that right? A. Well, not exactly right, no, because under certain circumstances the amount of flexing that would tend to occur between the loop and the bolt I am confident would be of a nature which would not exceed the clearance which existed there, so it would not be restricted by the plate member.

Q. How much clearance would we have in the Cobb group? A. Well, we would undoubtedly have about the same amount as we would have in a commercially built structure if one were built of the Graham setup. A matter in excess of what I would expect the flexing of the shank to be between those two points.

Q. Is it your testimony that due to the positioning of the parts in Cobb that the forces acting on the tooth would

not tend to bend or flatten the upper portion above the loop against the plate, the flat plate "D"? A. Oh, I didn't say they wouldn't tend to do it, that the forces wouldn't tend to do it. I am saying the amount [656] of flexure would not, in my opinion, be restricted by the presence of the flat plate, that is, that you start at the bolt and the very little flexure that occurs there would carry down to the stirrup member and then on down below it.

Q. Then do I understand it is your testimony that the flexure in the part of the tooth above the loop in the Cobb member, the dark green member, would be the same as it would be in the Graham 798? A. I think substantially so, assuming they were built of the same size.

Q. It would be the same character of flexure? A. The same character.

Q. We are agreed, however, that the direction of the force relative to that plate portion is different? A. Yes. The direction of the force relative to the shank is the same in each case, but the plate is on one side in one case and the other side in the other, so that naturally there is a reversal of direction as regards the plate portion.

Q. And considering the plate in Cobb is just the reverse of the direction of the forces as in Graham 798? A. That is right. In other words, the reaction to the force in the shank is taken by the plate portion of the hinged member in 798 under that particular circumstance, [657] and it is taken by the stirrup member in the Cobb structure, that is, the particular force we are talking about in a rearward and upward direction such as might be encountered when an obstruction was hit.

Q. You have never seen a device like the Cobb disclosure in actual use, have you? A. Not that I knew to be exactly like that, no, sir.

Q. So you can't tell us exactly how it would operate except for what is in the specifications? A. Well, coupled with what is showing in the drawings and specifications mean to me, as any other drawings that I see, and description, and having operated with mechanical structure of this and far more complicated type over many years.

Q. And the Cobb structure doesn't look like the Graham 798 device nor does it look like the accused device, does it? A. As a picture, no.

Q. I believe that you have the Rix illustration on Defendants' Exhibit 11. That is Patent No. 287,965. It is just to the right of your terminology or list of parts, isn't that right? A. Yes.

Q. Mr. Fishleigh, that structure of Rix is very similar to Cobb, isn't it? [658] A. Well, it has some similarities. It differs in about as many respects as it is similar, I guess.

Q. Would you tell us some of the differences. A. Yes. There is quite a difference in the spring arrangement, quite a difference in the stop arrangement, quite a difference in the attachment of the hinged member to the frame by way of fixed member.

Q. In other words, there is quite a bit of difference between those two structures, isn't there? A. In detail, yes.

Q. Now, tell us about that fixed member in the Rix patent. I believe you said it was designated with a small letter "t". A. Well, I believe I did say that. Actually, as I check it further, that designation, the letters "t" refer to the ears on the hinged member.

Q. What Rix calls hinging eyes on the hinge supporting bar "c", isn't that what Rix says? A. Yes. What I had reference to, and it doesn't carry a very clear number, up in Fig. 1 the lead line from "n" seems to run to the portion which provides the support for the pivot pin "n".

Q. And does Rix give that a number or a letter? A. If so I haven't been able to tie it in.

Q. He doesn't even tell what kind of structure he has [659] for his fixed member then, which you have designated yellow, does he? A. That is right.

Q. I believe you said that the loop in Rix had the same function as the loop of Graham 798, is that right? A. I said what? Which loop?

Mr. Gold: Will you read the question back, please.

(Question read.)

A. Well, I think the device which is called a loop "v" in Rix does function substantially like the portion 57 in Graham 798.

Q. Now, tell us about the function of the loop in the Rix patent. A. Well, that loop surrounds the shank and helps to support it upon the hinged member. Now, to the extent of cooperating with the bolt to necessarily hold the shank and the hinged member in constant continuous contact throughout their length, there is no indication of that requirement in Rix. As a matter of fact, there isn't any in anything else that I know of except 798. But it does provide a structure surrounding the shank and helping to hold it in position.

Q. You said constant continuous contact throughout its length. Did you find that in the Graham 798? [660] A. Yes, I think that is what it means when I read the element of the claim and read the file wrapper where it is talking about it, I think there is no question in my mind about it.

Q. But you didn't find that it said throughout its length in the claim? A. Oh, in the claim it says—

Q. I assume you are referring to Claim 2? A. Well, that is where I am referring now, where it says that "The bolt cooperates with the shank embracing means in maintaining the upper face of the shank in constant continuous contact with the under face of said plate portion." I don't find that it says a small part of the upper face in contact with a small part of the under face. It says maintains the upper face in contact with the under face, and to me that means just the one thing.

Q. It actually doesn't specify any particular extent at all, does it? A. No, it doesn't certainly say that a small portion of it will do. It just says the two faces, one face here and another face here (indicating), come together.

Q. Now, you say that this loop in Rix is to cooperate with the bolt to hold the tooth in place? A. Yes.
[661] Q. That is another harrow tooth, isn't it? A. Yes.

Q. Rix says that the structure shown in Fig. 2 is not very good, doesn't he? A. Oh, not as to what we are talking about. He is talking about the particular form of the tooth. He has got an improved tooth form as shown in Fig. 1, but that doesn't affect the hinging action as we see it.

Q. The force in harrowing, looking at Fig. 1, would be to the right and upwardly in the illustration shown in Defendants' Exhibit 11, is that right? A. Well, the force would be pretty much to the right, which would tend to move the point of the tool up and to the right.

Q. And that would be a force on this tooth that would be in the direction toward the bar of the loop on this dark green member? A. Yes, the loop "v".

Q. Or that portion that you have colored light green? A. Yes.

Q. On the dark green member? A. That is correct.

Q. Of course that bar or loop portion is integral with the plate portion of that member, is it not? A. Yes.

[662] Q. They are all one piece? A. Yes.

Q. Now, that force in Rix in the harrowing operation is exactly like we discussed in Cobb, isn't it? A. Yes.

Q. It is toward the loop and away from the plate? A. That is right.

Q. And just the reverse of what is the direction, relative direction in the Graham 798? A. Relative to the plate, which happens to be put on the other side. But of course on the tooth and the action of the tooth as such is the same.

Q. Now, is the Rix structure arranged so that the harrow tooth can be adjusted for depth work? A. Yes.

Q. Is that stated in the specification? A. I am not sure about that. My recollection is not, but I could be wrong, if you have the spot. But in any event a second hole is shown.

Q. That is the second hole right above your pink member in Fig. 3? A. That is right. It is not numbered, however.

Q. And so you assume that that would receive the bolt so that the shank or tooth could be moved up? A. I think there is that possibility. I gather that that [663] is what is intended.

Q. And the sharp bend part of the tooth is placed through that loop far enough that that adjustment could be made? A. Oh, I believe so. I haven't scaled it on

this drawing, and that wouldn't necessarily indicate anyway, but I believe that it is.

Q. Now, when you are harrowing with this structure there would be some bending in response to forces acting on this tooth, would there not? A. Yes, tendency at least to bend.

Q. That is true of harrow teeth, they have some flexibility that will bend under the load? A. Well, now are we talking about the part down below or—well, what you call the sharp bend, or the part up between the bolt and the loop "v"?

Q. If there is a difference you tell us about it. A. Well, as to the part down below, there is clearly a tendency to bend, although in the form shown in Fig. 1 there wouldn't be nearly as much tendency to bend as in the other because it is reinforced with corrugation. But up above there would be some tendency, but very little, if any, actual bending.

Q. In the form shown in Fig. 2 it looks like it is more or less a flat section and that could have some bending? [664] A. Yes.

Q. But in the form shown in Fig. 1 there is a "V" shape towards the lower end of the tooth, that would tend to make it quite rigid? A. That portion of it would tend to be rigid.

Q. But we would have even in that one some tendency to bend in the forces above that "V" portion of the tooth? A. Yes, sir.

Q. Now, with the force applied toward the loop, would the bending forces on the tooth cause it to tend to have the loop be the fulcrum? A. Oh, yes.

Q. And that would cause a corresponding action that would tend to move the part of the tooth above the loop toward the plate portion of the dark green member? A. Oh, I think there would be such a tendency, but a negligible amount of actual movement or bending.

Q. It would tend to hold it tight against it, wouldn't it? A. Oh, I don't know that it would tend to held it tight at all, depending largely on the amount of clearance. If there was in that loop as much as a—well, a relatively

small amount, although the tendency would be to move toward the plate the actual movement probably would not be a movement toward the plate. The whole thing would be a movement away from the plate, as [665] distinguished from its normal position.

Q. This tooth would tend to be like a lever arm, with the force acting on the end of it? A. Well, to some extent, yes.

Q. And when we have a fulcrum like this loop portion, so we would have part of our arm on both sides, then you have movements of force acting on that lever, don't you? A. That is right.

Q. The length of your lever arm is the movement of force? A. That is right.

Q. So the force that you have acting down here on the end of this tooth times the length of the tooth would equal the length of the other arm above the fulcrum and the force that would be, in that case, toward the plate of the dark green member, is that right? A. Well, that is certainly true up at the bolt at the end of that shank member.

Q. And there would be some forces acting throughout the length of that part of the lever arm? A. Some forces tending to bend perhaps, but not necessarily any force actually in any contact with or forces between the shank and the plate throughout that space or any tendency to bend beyond contact with the plate.

Q. It would actually maintain the contact, good tight [666] contact there. wouldn't it, so there wouldn't be any bending of the shank in that particular— A. I would expect it would maintain good tight contact at the bolt and it would be bent away enough to make contact with the loop and that you would probably have a curve in part at least away from the plate as between the two.

Q. That is assuming that there would be clearance in there, in the loop? A. Yes.

Q. Substantial clearance? A. No, relatively moderate amount of clearance, and even in the absence of—well, if it were only a very few thousandths, depending on the size, and if we were talking about structures such as we have here it would be a negligible amount of bending.

Q. I believe Rix said that the structure shown in Fig. 2 would hang up on roots? A. Oh, I think he said it would, yes.

Q. Of course Rix shows a curved spring bolt, does he not?

Mr. Morris: I think he is trying to find the answer to your preceding question, Mr. Gold.

Mr. Gold: I am sorry, I thought he had said he thought it did.

A. Well, perhaps I went too far. What he actually says is [667] that—

Q. (By Mr. Gold) If you will read in the second column, Mr. Fishleigh, starting about line 58, doesn't it say, "When the harrow in each figure is moved on ahead, the tooth in Fig. 2 will hang to the root x, while the tooth in Fig. 1 will continue to swing up until the working end is met"? A. Yes, he does. Up above he says that the structure will "swing back and upward quicker and farther during a given movement of the harrow than a tooth having a like bow, Fig. 2, without the improvement in Fig. 2," so he thinks that it would clear the obstruction quicker and better.

Q. And he shows in Fig. 1 it would swing up until it is limited by engagement of that dark green member with the beam, isn't that right? A. Well, I don't think he shows it in contact with the beam but closer to it than in Fig. 2.

Q. Would that beam be a limit of its movement? A. Yes, as shown here that would be as far as it could go.

Q. Now, that spring bolt, I asked you if Rix didn't show a curved spring bolt. I don't believe you answered that. A. I was looking for the other at the time. The answer is yes.

[668] Q. That bolt has a nut designated as "e" that serves as a stop, is that right? A. That is right.

Q. There is no face on either the tooth or the plate "c" that is normally in contact with the frame member or the fixed member, is that right? A. That is correct.

* * *

Q. (By Mr. Gold) You have never seen a structure such as shown in the Rix patent in operation, have you? A. Not precisely, no.

Q. In the structure shown in Fig. 1 under load hitting a root, or something of that nature, wouldn't the major tendency to bend be right below the loop portion, bend of the shank? A. Well, that would depend upon the relative forces, the spring and the relative flexibility. I would expect [669] it might be at what you have called the sharp bend, it would be in a place that starts at around there. But it would depend entirely on the relative forces as between the spring and the flexibility of the shaft and the amount of the load.

Q. You would consider that sharp bend rather poor structure, wouldn't you? A. I wouldn't use it in certain instances, but I don't have any great quarrel with it in a structure of this sort.

Q. It tends to provide a high stress area, doesn't it? A. Oh, it tends to.

Q. And of course the Rix structure doesn't look much like the Graham 798 or the accused device either one, does it? A. As a picture they don't look a great deal alike. Looking at it from the standpoint of a functional picture they have some similarities.

Q. I believe on the Defendants' Exhibit 11 you have some drawings of the Graham 811 patent. They are immediately below the square that you have with your designation of parts, is that right? A. That is correct.

* * *

[670] (Noon Recess.)

[671] AFTERNOON SESSION, TUESDAY, MAY 8, 1962

CLARENCE T. FISHLEIGH resumed the stand and testified further as follows:

Cross-Examination (Continued).

* * *

Q. (By Mr. Gold) I believe you stated that the Graham 811 structure appeared to be different from Dunbar, Cobb and Rix, in that it was turned 90 degrees from the position of those other three, is that right? [672] A. Well, I think that is the fact. I don't recall whether I said so or not, but the hinged member in its normal position is in a horizontal position, yes.

* * *

Q. (By Mr. Gold) In the 811 structure, the shank was between the fulcrum plate and the hinge member, is that right? A. May I have that again.

(Question read.)

Mr. Morris: You don't really mean that, do you, Mr. Gold, between the fulcrum plate and the hinged member?

[673] Q. (By Mr. Gold) I am sorry. The fixed member. A. That is what I was confused about. Between the fulcrum plate and the fixed member?

Q. Yes. A. Yes.

Q. And in your direct examination you called that plate number 63 a fulcrum plate because you recognized it had particular functions as a fulcrum plate? A. Well, I think that was true in part, because that is what the patent called it and I thought that was an apt description.

Q. The Glencoe structure also has the shank between the plate member and the fixed member, isn't that right? A. Well, it has it between those members in the sense, for instance, that one might say Kansas City is between Chicago and Denver, in that broad sense. But in the sense of being held between and in contact with, then it is not.

Q. There is no question in your mind that the 811 structure had flexibility the entire length of the shank, didn't it? A. Well, it was resilient so that if sufficient forces were

applied and quite heavy forces, that there could be some flexing if the forces were sufficient. Whether or not it actually did flex throughout the entire [674] length there is some question.

Q. It was a rather loose assembly so that there wasn't anything to keep it from flexing, was there? A. Well, that is correct, except the relatively short length between the fulcrum point and the connection or holding point at the spring.

Q. It was such a strange device that you were even surprised it even worked, weren't you? A. Well, I don't know that that is so. It certainly was not the type of device that I would recommend anyone designing that way, and as far as mere working or operability I don't recall ever having said that I didn't think it would operate at all. I didn't feel that it was particularly practical and what I have seen in the field tends to substantiate that.

Q. Do you know that over 500,000 of those clamps have been sold? A. Well, I don't know it but I don't doubt it. But that doesn't affect my view on it in the least.

Q. Now then, I believe that the upper right-hand corner of the Defendants' Exhibit 11 is a drawing of the Jeoffroy SC-580 device, isn't that right? A. Yes.

Q. That drawing has numbers on the various parts but there was no patent issued to Jeoffroy on that structure, [675] was there? A. Not that I know of, no.

Q. Those numbers and leader lines were some that you merely applied to the drawing? A. That is correct.

Q. The Jeoffroy has longitudinal movement of the shank relative to the fulcrum plate, does it not? A. It may have.

Q. Between the fulcrum plate and the fixed member? A. Yes, sir.

Q. There are no bolts holding the shank in place on the fulcrum plate? A. No, no bolts between the shank and the fulcrum plate.

Q. It has the same relationship of parts and the same operation as the Graham 811 device, doesn't it? A. May I have that again?

(Question read.)

A. Well, only in part. To some extent it does, but it doesn't have the load being carried by the spring bolts as in the 811 structure, for example. It doesn't have the open pivot groove in the fulcrum plate that the 811 has. There are those things at a glance. But to the extent the shank is between the fulcrum plate and the fixed member and to the extent that the shank floats in that position there is some degree of [676] similarity.

Q. Jeoffroy has a nib and hole arrangement or socket to keep the shank from being pulled out? A. Yes, both between the fulcrum and the shank and between the shank and the fixed member.

Q. In other words, the nib and socket would perform the function of holding the shank in place instead of the spring bolt in the particular illustration of the Graham 811? A. Well, it would tend to under most conditions hold the shank in place. As was brought out, I think, here the other day, there are conditions in which it might not hold where the 811 would, and of course there is a complete absence of the detrimental effect of the load on the spring bolts.

Q. And the shank would tend to pivot about the rear of the fixed member? A. Yes.

Q. And the plate would pivot about its pin, the pivot pin? A. Yes.

Q. Two different pivots? A. The fulcrum plate?

Q. Yes. A. Yes.

Q. It has two different pivots then for the shank and the [677] pivot plate? A. That is correct, if we really call the contact between the shank and the fixed member a pivot. It is more of a rocking action than it is a true pivotal action, but there is that difference.

Q. They would move about two different axes then? A. Well, yes. The movement of the shank in my judgment is not a true pivotal movement, whereas the movement of the plate would be.

Q. Of course the Jeoffroy SC-580 shows two springs where the Graham 811 patent showed only one spring? A. That is correct.

Q. And I believe that you have at the lower right-hand corner of Defendants' Exhibit 11 an illustration of the

Traeger—that is the Australian patent No. 111910? A. Yes.

Q. I believe you said that in that patent the shank is between the plate member and the fixed member? A. Yes, considering the portion 1 as the fixed member, that is correct.

Q. The Traeger device is actually a two piece tine, isn't it? A. Yes, sir.

Q. And there is no clamp shown in the drawings in the figure of the patent? [678] A. Well, yes, there is a spring clamp as between the two portions of the tine. There is no clamp shown for clamping the entire tine on the frame of the plow.

Q. No mounting shown at all for the tine on a frame? A. No.

Q. I believe that patent referred to the tine as being an S-shaped tine? A. I believe that is correct, yes, spring tine of the S type.

Q. And he also stated that those S-shaped tines tended to break? I believe if you will look in Column 2 of the first page that you will find it in the first full paragraph. A. Yes. Well, it says that there is a weakness at almost the center of the tine, "for whenever a tine breaks such breakage usually occurs at this point."

Q. And so Mr. Traeger put a pivot and made a 2-piece tine so it would pivot at the point it normally would have broken? A. Yes, he put a spring clamp to hold the two parts together.

Q. Then this part that you have colored yellow is actually a flexible member, is it not? A. That is correct. But as to the operation of the clamp it operates as a fixed member although it itself might [679] move under certain circumstances.

Q. Now, when you say it is a clamp, in what sense are you using the word clamp? A. Oh, I think in the sense that we have been using it throughout here, as a means of connecting two parts together with a degree of flexible movement as between resilient, flexible movement between them.

Q. And you are considering in all of your answers that broad terminology for the word clamp? A. Well, when

we say nothing more than that, it may come down to have certain parts, and this one has many of the individual parts which narrow down the terminology in particular structures we are directly concerned with.

Q. Mr. Traeger didn't refer to it as a clamp, did he? A. No, he referred to it as a hinge, which would allow the rear part to swing upwardly against the influence of a spring or springs.

Q. When we referred to the fixed member in the Graham 798, that is a member that is held rigid to the frame, isn't it? A. That is correct.

Q. And in that sense the part you have colored yellow in Traeger would not be a rigid member? A. Well, it would not be identical to it, but of course even under those circumstances in any operation of the [680] plow the frame and the so-called fixed member do move, so that it is not an absolutely static situation, and the same way here. This upper portion of this tine moves in a somewhat perhaps different way. There is a spring action there and there is a movement of the main frame in a plow such as 798. They are not identical. I think I pointed that out in my direct examination.

Q. You aren't suggesting that the fixed member is supposed to move on the beam in the Graham 798, are you? A. No, I am suggesting that the beam and the fixed member do move relative to the earth as a plow is in operation.

Q. As it is pulled over the ground? A. Yes, surely.

Q. Traeger's device is for drills and combines, isn't it? A. Well, I think that is what he says. He says it is an improved spring tine for agricultural implements, and in particular it relates to spring tines of the "S" type, which are commonly used in drills and combines. But he says it is for agricultural implements.

Q. Those are the specific agricultural implements he has mentioned? A. Yes.

Q. We shouldn't go beyond what he specifies, should we, to avoid his application? [681] A. Well, perhaps not, but when he specifies agricultural implements and then merely suggests two in which they are most commonly used, certainly I would think that you could go to agricultural implements generally if you had occasion to.

Q. We should give it a broad interpretation in that respect? A. Well, only so broad as his language. I don't think that when he says agricultural implements and in effect says, for example, drills and combines, that that restricts it to only drills and combines.

Q. We don't know how that tine is fastened to the beam, if there is a beam, in the implement, do we? A. Well, shall we say that Traeger doesn't specifically point that out. I think that is probably an exaggeration to say that we don't know, as of that date, that one informed in this art would not know how it was fastened. But at least Traeger does not, did not apparently feel it necessary to explain that rather common detail.

Q. If we were going to follow the teachings of Traeger we would have to take these shanks and these devices that we have here, like the defendants' structure, cut them in two and then hinge the two pieces together, wouldn't we? [682] A. Well, if we were to slavishly follow it in each detail, that is correct.

Q. You can't read the claims of the Graham 798 patent on the Traeger disclosure, can you? A. I don't believe so, no.

Q. I don't believe I asked you—you can't read the Graham 798 claims on the 811 disclosure, can you? A. No, I think not.

Q. And it would also be true that you can't read them on the SC-580 structure? A. I believe that is correct.

Q. Traeger, Cobb, Rix and Dunbar all show simple pivoted teeth, don't they? A. Well, they show teeth. What do you mean by simple teeth?

Q. Just merely pivoted teeth, isn't that right? A. Well, they are teeth. I would hardly say, for instance, that Rix or for that matter Cobb, or for that matter Traeger, are what might be called simple teeth. They are single teeth, if that is what you mean, in some instances pivoted to the frame, in other instances pivoted between the parts of the tine or tooth, whichever you want to call it.

Q. Would you say that they have a simple pivot? A. They have a single pivot.

Q. Go to the Danish patent, Petersen, that is Patent No. [683] 57,391. I believe you have that at the lower left-hand corner there. A. That is correct.

Q. I believe that is for the "horse hoe"? A. That is what the translation calls it, yes, sir.

Q. Are you familiar with horse hoes? A. Well, I never ran onto that terminology, which clearly is a literal translation of the foreign language. But I believe I am familiar with the type of structure they are talking about. I would say a horse-drawn hoe or cultivator, harrow.

Q. This could be a harrow? A. It could be.

Q. Does the tooth engage the plate above the loop portion? A. I believe it does. Yes, the shank.

Q. Do you find that in the specification? A. I don't think I recall a specific mention of it.

Q. In the drawing you have on Defendants' Exhibit 11 it shows a dotted line that apparently is the face of the shank that would be toward the right of this drawing, in other words, toward the fixed member, we might say. Isn't that right? A. I don't so interpret it, no.

Q. There is a dotted line there, isn't there? A. That is right, it is a continuation of the full line [684] which we see up above the yellow fixed portion.

Q. I think you are looking at the wrong one, Mr. Fishleigh. I mean this dotted line here (indicating), that would be a continuation of the solid line of the shank leading over to the loop? A. Well, I do see that line, yes, and you say that would be what?

Q. That would be the shank. It is hidden behind the other parts in this drawing, the face of the shank? A. Yes, I believe it would be that.

Q. Now we have another dotted line, do we not, that is spaced in this drawing in Defendants' Exhibit 11 about one-eighth of an inch to the right? A. Yes, that is correct.

Q. And that is spaced then from the shank? A. Yes.

Q. Then the shank could be spaced away from that plate member at that point? A. Oh, I don't so construe it, and I bear that out by—if you look at the dotted line, which you say and which I agree does represent the right-

hand side of the shank, you will see that that dotted line continues on beyond the end of the shank to the top end of the hinged member or fulcrum plate, and my interpretation of that is clearly that that represents a flat face against which [685] the shank is pressed.

Q. That is the way you construed it, but then there is nothing in the specification to say that, is there? A. I don't find specific language of it, but the drawing is quite clear to me. The other line which you refer to is clearly an extension of the full line above which is an outside line, an outside flange of the hinged member.

Q. But we should follow the specification to find out how these things are made, should we not? A. Well, if there is a conflict between the two, or something, but where you have some features of that kind which are shown quite clearly in the drawing, it is not necessary, in my opinion, that every little detail be spelled out in detail in the written portion.

Q. And you can use some variation in your interpretation, particularly to make one operative, can't you? A. Oh, I don't think it is a matter of variation in my interpretation, but I believe that one looks to the specification and the drawings to see what the parts are, and particularly when referring to parts which were not perhaps the basic parts that he was directly concerned with.

Q. Do you feel that that upper part of the shank would have to engage a flat surface in order for the structure [686] to be operative? A. Oh, I wouldn't say that it would have to, but I believe that it clearly shows it in that condition here.

Q. You think it would work even though it didn't engage the face there? A. Well, I don't think it would be as good myself, but operative in the sense that you could put the parts together and operate them, in a patent sense, that is, the type of operability needed for patent work, I think it would.

Q. That mounting is such that the shank can be adjusted vertically to an adjusted depth of hoeing? A. Yes. It can be adjusted vertically anyway.

Q. You described the action of the tooth in the Petersen structure when it strikes an obstruction. Did you find that

in the Petersen specifications? A. Well, not in detail as to just what happens to the bottom part of the shank or tooth. It tells more as to the movement of the part 2 and the shank up in there and the guiding of those parts by the lateral cheeks so that the tooth will not rock in its action but will stay relatively straight.

Q. Mainly what was described was the lateral cheek, as you referred to it, to keep it from having lateral movement? [687] A. That is correct, and indicating what he was dealing with was the type of mounting which would move and pivot.

Q. I believe you also mentioned a boss on the dark green member, No. 2. You have colored that boss brown in Defendants' Exhibit 11. Did you find anything in the specification of the Petersen patent that says there was a boss there and it was on that plate? A. No mention of it at all.

Q. You merely assumed it was on the plate? A. No, I wouldn't say that. It has been my business for many years to read drawings of this kind, and that is what the drawing says to me just as clearly as though it said it in English language, or in the Danish language with a translation.

Q. Of course that part you have colored brown could be fixed inside of the spring, couldn't it? A. Well, if one didn't want the structure to perform, I presume it could.

Q. There is nothing to tell you actually how it is made? A. Well, there is no language referring to it. I wouldn't agree with you that there is nothing in the Petersen patent to tell us how it is made, because it is quite clear to me as to what it is and how it functions, quite comparable to a rather conventional and standard [688] method of doing things.

Q. And did it tell in there that there was anything to center the spring relative to that plate? A. No.

Q. I believe you mentioned the hinge member was between the tooth and the fixed member, is that right? A. I think I may have said that the hinged member is between the shank and the fixed member, again in the sense of being placed between, but not—the hinged member it-

self doesn't contact any face of it--well, it does contact a face of it, too.

Q. It has this contact here at the pivot pin with a part of the fixed member, doesn't it? A. Below the pivot pin slightly between the portion 17 of the hinged member and the portion 18 of the fixed member.

Q. You say below the pivot pin? A. Yes, starts slightly below and extends down the full length.

Q. It could be almost on a line with the axis of the pivot then, could it not? A. Well, if it were different it could be as you describe it. But I say it starts, as I have looked at it rather carefully, it starts slightly below the pivot pin and continues on down.

Q. That is the part you have colored dark green on [689] Defendants' Exhibit 11 in the broken out part of the yellow portion here (indicating)? A. Yes, that is the crosshatched part that is colored dark green.

Q. Now, in the operation that you described I believe you said that the structure in operation would be moving to your right, looking at Defendants' Exhibit 11, is that right? A. I believe that is correct.

Q. And the forces then that would be applied to this tooth would be a rearward movement tending to rock the tooth clockwise about the pivot? A. Are you asking me that?

Q. Yes. A. Would they be?

Q. Yes, sir. A. Yes.

Q. And that force on that shank or tooth is toward the loop that you have colored light green, toward the bar part of the loop? A. That is correct.

Q. And it is opposite in direction from the part that you think is a flat face on the upper portion of the plate member of the pivoting member in Petersen? A. It was directed away from that at that particular point, [690] yes.

Q. And that force then would tend to cause a movement that would move the upper portion of the shank over and hold it tight against the face of the hinge member? A. I don't think so. I don't visualize any movement of it against the plate, because I visualize it as already in con-

tact with it, so that if there is any movement it would tend to move away from the plate. Now, the plate and the upper part of the shank would undoubtedly move in a clockwise direction if the load was sufficient to compress the spring.

Q. But a component of the force acting on this tooth would tend to hold the tooth tighter against that face of the plate member then, wouldn't it? A. At the very top, you mean?

Q. Along the whole face of it. A. Oh, I don't understand it that way, no, sir.

Q. You think that there would be looseness in the structure? A. No, I don't think that there is looseness at any time.

Q. You think it is held tight at all times? A. I think that is the way it would be.

Q. And if something is in engagement and tight you can't have any additional force that would tend to make it tighter? A. Oh, that is a different question. There can be a force [691] which might tend to do something, but I believe that it would tend to pivot about its contact with the bolt 6, which if there was any possibility of it, it would move the lower portion, that is, of the shank, away from the plate and would tend, perhaps at the very top, tend to hold it a little tighter at the very top.

Q. Do you think that this force acting on the shank would move the tooth away from the plate at the lower end? A. I don't think so, although it is possible if there was any degree of looseness there, not enough looseness to let the shank move but enough to leave a minute amount of play.

Q. It is only held by a set screw, isn't it? A. That is right.

Q. Now, this tendency that you refer to, if we have the shank out of the ground the set screw is all that is holding or applying any force tending to hold the shank against the plate of the hinge member, is that right? A. Yes, sir.

Q. And then we put the lower end of the tooth into the ground so that there is a rearward force on the lower

end of that tooth. That force would also tend to be transmitted into the upper part of the tooth above the loop, would it not? A. Well, yes, to some extent, depending on circumstances.

[692] Q. So it would apply some force then on the upper portion of the tooth toward the face of the plate that is engaged in? A. I would think so, toward the upper part of it. It would tend to rotate the tooth in a clockwise direction, as well as the hinge member.

Q. So there could be more force then exerted on those contacting faces, due to the force on the lower end of the tooth? A. At the upper part of the—upper end of the shank, at the point of contact there.

Q. Now, if we would turn that around and apply the force in the opposite direction on the lower end of the tooth, what would happen to the fastening of the tooth? A. Well, if the fastening was in its proper position I would say there would be nothing would happen. There would be a tendency, a force at the upper end, but if properly held it would hold against the plate. If there were looseness in the bolt, the upper end might tend to move slightly away from the plate.

Q. Now, these prior patents of Dunbar, Rix and Cobb, can you tell us about what the dates of issuance of each of those patents were? A. Yes. Dunbar was 1878. Rix was 1883. Cobb was 1883.

Q. Now, all of the patented structures that you show on [693] Defendants' Exhibit 11, none of them except Graham 811 would be expressly for chisel plowing? A. I believe that is correct. You have limited that to patented structures.

Q. And you don't have anything on that Exhibit 11 as to a spring clamp for plowing that was prior to Graham's 811, do you? A. Will you read that back, please?

(Question read.)

The Court: Are you again limiting it to chisel plowing, in that sense, as distinguished from cultivating harrow?

Mr. Gold: Yes, sir.

A. I think not. I am not sure about the Glencoe dates, but I don't believe that is prior to 811.

Q. (By Mr. Gold) In the Petersen structure if the set screw numbered 6 would work loose the shank would come out, wouldn't it? A. If it worked sufficiently loose under some circumstances it might come out. It could work loose and not come out at all, and it could work loose and continue to operate under a great many conditions.

Q. That would be pretty light conditions, wouldn't it? A. No, I don't think that would affect it particularly. It would be—so long as the conditions were such as to [694] exert rotary forces as distinguished from downward pull forces, I don't think that the device would come out, depending of course on how loose it would be.

Q. You don't think there would be any upward force on it? A. There would be some, but relatively I believe that the upward force ordinarily, as distinguished from a rotary force in a device of that kind, would be less. Now, naturally if it is sufficiently loose and the circumstance is such it would fall out. It is supposed to be held in the tight position.

Q. There is no fastening means between the shank and the plate such as disclosed in the Graham 798 patent, is there? A. Well, such as the bolt 56 in the 798 patent, are you asking me?

Q. Yes. That is what is disclosed, isn't it? A. Well, that is a part of the means for fastening and holding it. The stirrup is similar in many respects, but there is no bolt of the kind that is shown in the 798 passing through the shank and the hinged member.

Q. The Danish patent of Petersen was cited by the Patent Office during the prosecution of the application that resulted in the Graham 798 patent, wasn't it? A. Yes.

Q. And it was allowed over the Danish patent? [695] A. Well, it was allowed with that as a reference, yes.

Q. Now, if you were going to follow the teachings of the Petersen patent you would certainly consider the application of the force as applied to it and provide your structure with the same application of forces, wouldn't you? A. Well, if I were to apply the entire teaching of Petersen, yes. If I were just going to use that complete type of clamp.

Q. So if you were going to use parts of it you would still want to consider the way the forces were applied to those parts, wouldn't you? A. Well, not necessarily. The same type of structure might be quite suitable for different application of forces.

Q. But there wouldn't be anything in the Petersen patent to show that, would there? A. Well, no, but—

Q. That would be your own ingenuity that you could find some other way of applying the forces? A. Well, the point is that you are not applying the forces particularly, you are using the structure in some other arrangement, certain parts of it, say.

Q. If you change the relationship of the forces you wouldn't have the same situation and therefore you wouldn't be following the teachings of the patent then, would you? [696] A. Well, not in its ultimate and complete detail, but I believe that one can very fairly be said to be following the teachings or utilizing a part of a structure, even though it might be put in a different total composite structure.

Q. Can you look for some other place to tell you how you would apply the structure in this other device? A. Oh, I don't think that is necessary, sir. We are talking as of 19—well, in the 1950's. If we were talking about 2,000 B.C. perhaps that would be true, but all of these I believe are to be considered in the light of the vast storehouse of knowledge which even the most ordinary of mechanics had as of 1950, '53, whatever this date that we are talking about is. Well, 1950, if we go back to some drawing they have heard about sometime after 1951, if we pay attention to the change in beliefs of Mr. Graham, as I remember them, at 1951, he was saying that a structure such as we are now talking about wasn't much good. So if we think of it in terms of some time after that when the matter had been discussed from the witness stand, we still have that storehouse of knowledge that these things are to be viewed in the light of. Our patents would be many, many pages of drawings and of specifications, if we had to describe every detail on the basis of starting from a vacuum. [697] Q. I believe you were saying that Mr. Graham said such a structure wouldn't be much good. His testi-

mony was that in the 811 structure he didn't believe that it would be operative to put the pivot above the shank; isn't that what he said? A. My recollection is that there was considerable testimony. I haven't looked at it recently and the details—

Q. Your memory could be quite hazy about it then? A. No, there are certain things that stand out. I had occasion to talk about that last week, that there are some things along the line that we remember rather clearly, and I remember rather clearly that he said that longitudinal movement as between the shank and the hinged member was essential, that it wouldn't be satisfactory to bolt the two together, and that a fixed pivot wouldn't be satisfactory, and so forth.

Q. And that is when he was testifying about the 811 structure? A. That is correct.

Q. Now let's look at the Glencoe device. I believe that is shown in the second from the right at the lower part of Defendants' Exhibit 11? A. Yes.

Q. The Glencoe device has a shank between the hinged plate member and the fixed member? [698] A. Yes, although not in contact with it.

Q. In that aspect it had the same relationship as in the Graham 811 patent? A. Yes, in the aspect of being placed above the pivoted member, differing in the matter of contact of the upper surface with the fixed member.

Q. With the location as between the fixed member and the hinged member? A. Yes, in that limited aspect they are similar.

Q. The drawing that you have on Defendants' Exhibit 11 showing the Glencoe structure, that is not a reproduction of a patent drawing, is it? A. No.

Q. In that instance the small numerals and the leader lines are your own? A. Yes.

Q. You are familiar with the Rolf patents? A. Yes.

Q. The Rolf patents were on the Glencoe structure? A. Well, they were on a Glencoe structure. It is my understanding that they cover particularly some details perhaps that were developed later than the particular model that we have here. I haven't studied them in detail for that, no, sir.

Q. When you were describing the Glencoe structure you [699] mentioned the part that you had numbered 29 and called it a stirrup. That was to make it sound like Graham's, wasn't it? Rolf called it a channel element and a seat element, didn't he? A. Well, I have no objection to using any of the numbers. Of course when the structure is substantially the same as a structure with which we are concerned here I naturally use that nomenclature rather than some other nomenclature that would tend to indicate a difference where none exists.

Q. We could say that that portion of Glencoe is an upwardly extending loop, couldn't we? A. Yes.

Q. With a stirrup it would be depending, would it not? A. Oh, normally, yes. When that nomenclature, which is carried over from harness usage, is then applied to structures of this kind I don't believe that it changes it if you turn the piece upside down.

Q. You have read the record in the second Jeoffroy suit, haven't you? A. I would say no. I have seen some portions of it but I haven't read it in detail at all.

Q. Did you find in that record where Jeoffroy had filed an application for patent on his HT-5 device? A. I didn't see that in the record, no.

[700] Q. And I believe you said that you knew that there were patents issued to Rolf on the Glencoe device? A. Yes.

Q. When Mr. Rolf filed his application, he filed an oath stating that his devices had not been in public use for more than one year prior to the application date, isn't that right? A. I don't know anything about that, sir.

Q. That is customary in filing the application, isn't it? A. Well, as far as his particular improvement or part that he was claiming, yes.

Q. All applications have to have such an oath? A. That is correct.

Q. Did you read where Mr. Rolf then later swore that he had in his devices—

Mr. Morris: May I inquire, Mr. Gold, what the purpose of this line of questions is? I don't want to object to it if you have something in mind, but it seems to me it is

totally immaterial and irrelevant and that the sole purpose you could have in mind would be to impeach the credibility of Mr. Rolf, who is not here in court and not here to testify. I object to it as immaterial and irrelevant to any issue in this case.

Mr. Gold: I wanted to see how much this witness [701] knew about those applications. I thought maybe I would have some other question on it, and the situations involving the Glencoe structure.

The Court: According to my understanding, it should be admitted as proper cross-examination.

Q. (By Mr. Gold) Can you answer? A. What is the question?

Q. I believe I asked if Mr. Rolf later swore in his application that the device had been in public use prior to the Graham 798? A. I don't know anything about that, sir.

Q. The Rolf application was pending in the Patent Office while the Graham 798 patent was pending, wasn't it?

Mr. Morris: Which Rolf application are you inquiring about, Mr. Gold? There were three.

Mr. Gold: I think all of them were pending at the same time.

Mr. Morris: That may be true, but you might identify them.

A. Answering your question, I have information on—

Mr. Morris: Just a moment. Let Mr. Gold identify which one he is talking about.

Mr. Gold: I would like to have marked the file wrapper of a Rolf patent, No. 2,739,518 as Plaintiffs' Exhibit O, and a soft copy of that Rolf [702] patent as Plaintiffs' Exhibit P.

(Plaintiffs' Exhibits O and P were marked for identification.)

Q. (By Mr. Gold) Mr. Fishleigh, I hand you a soft copy of the Rolf patent No. 2,739,518. It has been identified as Plaintiffs' Exhibit P. Tell us the filing date of that application that matured in the patent. A. April 19, 1952.

Q. Do you know when the 798 patent issued? A. February 10, 1953.

Q. Then that application that matured in the Rolf patent was co-pending with the Graham 798 application? A. Yes.

Q. Now I have opened the file wrapper of the Rolf patent, Plaintiffs' Exhibit O, to page 15. That is an office action from the Patent Office, is it not? A. Yes.

Q. That cites the Rix patent No. 287,965, which is the one that we have been talking about previously as shown on Defendants' Exhibit 11? A. Are you asking me that?

Q. Yes, sir. A. Yes.

Q. Will you tell us the initials of the examiner that gave that office action. [703] A. "Lip." There are some pencil initials above, "RFL" but I don't know what that means.

Q. Do you have a copy of the file wrapper of the Graham 798 patent? A. Yes.

Q. Now you will turn to page 39 of the file wrapper of the Graham 798 patent, Defendants' Exhibit 4; that is an action from the patent office on the Graham 798 patent, isn't it? A. Yes.

Q. And what are the initials of the examiner on that action? A. Well, down in the typed initials it seems to be "Lip".

Q. That is the same that was on the action in the Rolf application, isn't it? A. The same typed notation at the bottom, yes.

Q. Now, the date of that action on the Graham 798 is November 14, 1952? Is that right? A. Sir?

Q. The date of the Patent Office action on page 39, that is November 14, 1952? A. Well, I —

Q. That is the stamp put on that shows the filing date of the action and the Patent Office division, does it not? A. My photostatic copy doesn't have such a stamp, or I don't see it if it does.

[704] Q. It apparently hasn't been reproduced in your copy? A. It has failed to come through. Yes, the stamp is November 14, 1952.

Q. That is on page 39 of the file wrapper, Defendants' Exhibit 4? A. Yes.

Q. Then apparently the same examiner was handling the Graham 798 application and the Rolf application, isn't that right?

Mr. Morris: Your Honor, that is a pure conclusion, I don't suppose there is anything in this regard—"Lip" in one file and "Lip" in another file, no name shown here, I don't believe the Court or anybody else would be entitled to make that conclusion. It may or may not be true, but it would just be a pure guess on the part of anyone.

The Witness: May I see your copy a moment?

Mr. Gold: Yes, sir.

The Court: I would like to ask a question in that connection. Is the name of the examiner Mr. Goldberg?

Mr. Gold: He is the chief of the division.

The Court: And these initials in the lower left-hand part of each page—

Mr. Gold: Would be the assistant examiner [705] handling the application that made the action.

The Court: Who would initial it? Would that be the assistant examiner?

Mr. Gold: They have different grades of examiners and they have the under-examiners and the supervisors, and this would probably be the supervisor of that under-examiner that would initial it.

The Court: "RFL" would probably be the supervisor then, is that correct?

Mr. Gold: Yes.

Q. (By Mr. Gold) Mr. Fishleigh, doesn't "RFL" appear on the Graham action that was dated November 14, 1952? A. Yes, but I don't know—even you say that probably is what it means. So if you don't know better than that, I certainly don't know what the practice is there as to what an initial of that sort might mean. Those initials do appear on both sheets. That is as far as I know about it. But the signature of course is different.

The Court: What do you mean, the signature is different?

A. Well, the signature of Goldberg is not either "Lip" or "RFL."

The Court: It appears to the Court that the initials "RFL" are the same, at least appear on the [706] surface to be the same on both papers.

Mr. Morris: Your Honor, I don't want to quibble about this thing.

The Court: I don't know that it has too much probative value. I think you might surmise it was the same individual. Conceivably there could be two individuals with the initials "Lip." I presume the printed initials "ms" after one and "wm" after the other would refer to the person who wrote the letter, the instrument.

Mr. Gold: Who typed it.

The Court: Who typed it, yes.

Mr. Gold: Yes.

Mr. Morris: Certainly I have no objection to offering these file wrappers in evidence for whatever they are. My objection is calling on this witness to make the conclusions as to what those things stand for.

The Court: Of course if he doesn't know he can just say he doesn't know.

Mr. Morris: All right.

Q. (By Mr. Gold) Now, it would appear that the examiner in the Patent Office that handled both applications was familiar with the Rix patent, would it not? A. I don't know that, sir. All I can say is that on those two sheets you showed me there are some similar or [707] identical initials. Now, what that meant in the practice there I don't know.

Q. You are not familiar with that practice? A. Certainly not to any such detail as that.

Q. I believe you have testified that you have studied many file wrappers in connection with patent litigation. Haven't you made yourself acquainted with practices in the file wrappers and what they show? A. Well, yes, but not from the standpoint of what individual in what position initials what, or as it shows here, a letter is signed by one man and another man's initials appears, and still a third one's initials. Now, just what those mean I haven't any idea.

Q. Assuming that they were the same examiners handling the two applications, it would appear that he was familiar with the Rix patent, would it not?

Mr. Morris: Your Honor, this is not a proper area for opinion testimony. Those conclusions can be drawn as well by counsel or the Court as this witness can draw them. It is just not something upon which people are called upon to express opinions. It is not an area for opinion testimony. It is incompetent.

Mr. Gold: Your Honor, I believe that this is an expert witness here who has indicated he had a great number of qualifications, had studied many file [708] wrappers, was familiar with such things, and apparently he now doesn't know what is the practice, but I think that he could testify as to what would appear from these papers as to the knowledge of the examiner handling these applications of the Rix patent, and he has indicated previously that the Rix patent was not cited against the Graham application to apparently make something of it. I think that in cross-examination we can show the examiner knew of the Rix patent and didn't see fit to cite it. I think it would be obvious.

The Court: I think it might have some relevancy to the qualifications of the witness on this particular point. It doesn't prove anything of probative value on the issue, but might go to his qualification.

Mr. Morris: Your Honor, I don't believe this witness has even attempted to say that he has any particular knowledge of the intricacies of Patent Office procedure, particularly these administrative matters.

The Court: I think that is what he is cross-examining him about. He did make a statement that he was very conversant with patents, had testified in many patent suits.

Mr. Morris: Yes, sir.

The Court: I think it is a proper area of [709] cross-examination to inquire as to his qualifications along that line.

Mr. Morris: If the purpose of the examination is to inquire as to qualifications, for that purpose, that limited purpose, I withdraw any objection. But his purpose is not

that. His purpose is to attempt to show by this witness that the examiner who handled the application of 798 was the same examiner who handled the application of the Rolf patent, and since that examiner cited Rix in the Rolf application he must have known at the same time about it when he was handling 798. Now, that is the purpose of the examination.

The Court: I don't know that you could necessarily make a factual conclusion on that. The witness has stated he didn't know, that it might not be the same individual in both cases.

Q. (By Mr. Gold) When applications are filed in the Patent Office, by different inventors, and they are claiming the same thing and the applications are co-pending, they can be put in interference, can they not? A. Yes.

Q. That is a Patent Office procedure, to see who should receive the patent? A. That is correct.

[710] Q. There was no interference prepared between the Graham and Rolf applications, was there? A. None that I know of.

Q. You mean there might have been one that you don't know about? A. I don't think there was and I haven't seen anything about it in the Graham file wrapper, so I assume there was not. Whether there was any attempt to set up an interference I don't know.

Q. From your study of the file wrapper you don't know whether or not there was an attempt to set up an interference? A. There is nothing that indicates it there.

Q. Now, when you consider the direction of forces as applied to the Glencoe structure in plowing operations how would the force be applied to the hinge member, as we may call it? A. Well, the shank would—the forces would be such as to make it tend to rotate about the pivot point 8 and it would carry the hinged member with it, exerting some force on the loop 29 that turns it in clockwise direction and some force at the other end to assist in turning it.

Q. In the Glencoe structure you would have an upward and rearward force on the shank that would be applied in the [711] direction toward the loop at the bar of the shank, isn't that right? A. That is correct.

Q. It would be in a direction opposite from the face of the hinge member that is engaged by the shank forwardly of the loop? A. That is correct.

Q. And in that force the edge of the loop would tend to act as a fulcrum for the shank? A. Oh, I rather doubt it in that instance. I think the entire bottom of the loop would be contacted and I don't believe there would be, with as stiff a structure as that, there would be any particular fulcrum action about that point as a point.

Q. And won't you agree that this force would have a component that would tend to apply pressure, making the engagement of the shank tighter against the face of the hinge member? A. At the extreme right end and near the bolt I believe that would probably be true. I don't think it would be true throughout the rest of the space between the bolt and the loop or stirrup 29.

Q. And the point of the greatest stress in the shank would be immediately at the rear of this loop 29? A. Well, in the sense of any severe localized stress there [712] I rather doubt it.

Q. You doubt that? A. Yes.

* * *

[713] Q. (By Mr. Gold) I believe you doubted that that would be a high stress point in the shank on the Glencoe structure immediately to the rear of the loop, Mr. Fishleigh? A. I believe that is correct. It might have somewhat higher than some of the other places, but in the sense of being a high stress point carrying any implication of probable failure, I doubt it.

Q. You would also doubt that there would be a high stress point here at the rear of the hinged member in the Deere 100 series, Defendants' Exhibit 27-A? A. In the sense of causing a substantial failure there I [714] have some doubt about it. It might be somewhat higher than at many other places, but I don't believe that would be a high stress point in the sense of indicating a point of probable failure.

Q. You say it might be a higher stress area. Do you know whether it would be or not? A. I haven't checked the detail for stresses to test it, so in that sense I don't know.

Q. Then you haven't checked the Glencoe device in detail as to the stress either, have you? A. Not in the laboratory with any stress analysis equipment.

Q. So then you don't know about the stress in the Glencoe shank? A. Well, from the standpoint of testing it I don't know. From the standpoint of understanding the structure and having seen those which had been operating in the field I think I can say I do know.

Q. That knowledge wouldn't be sufficient for you to have a definite opinion relative to the Deere structure, the 100 series? A. Well, yes, to the same extent. I have seen a number of those and I haven't seen any indication of sufficient high stress to cause failure at that point.

Q. By failure you mean breakage? A. Well, that is what I specifically meant, but I would [715] also include in that permanent set or permanent distortion.

Q. I didn't ask about failure, I asked about a high stress area, didn't I? A. Well, yes, but high stress is indicative normally of—tied in with a dangerous point or a failure point. Any of these things, just putting it that way and comparing it with nothing else—you have high stress throughout one of these shanks.

Q. You probably spent two hours observing the operation of the devices in issue here? A. Well, and then considerably more, sir.

Q. Was that in the field? A. Both in the field and from the standpoint of observing the possible reaction to rather severe stresses in the laboratory.

Q. And you have probably seen three or four plows with the Deere clamps on them? A. Oh, of the Deere 650 and Deere 100 I would say possibly some more than that, but not a great many more than that.

Q. The hinged plate of the Glencoe structure was cast, was it not? A. I believe so, yes.

Q. And there is some tolerance in the loop portion of the [716] shank so the shank could be inserted into it? A. Undboutedly, in those that I have seen there was.

Q. You would consider that the obvious way to make it, wouldn't you? A. Yes.

Q. And that was about the same clearance that was in the Jeoffroy HT-5 clamp, wasn't it? A. I don't recall having checked that. May I look at that for a moment? Yes, of that general order.

Q. That same clearance would probably be obvious to put into the Graham 798 structure? A. Well, not if you were going to build a structure to follow the teachings of the Graham 798 structure, carrying it into the structure defined by the mechanical elements of the claims and the description of that as pointed out in the file wrapper in explanation of what those terms meant.

Q. That clearance that might be in that loop portion doesn't have anything to do with the direction of forces on the shank relative to the elongated plate of the hinged member or the bend of the shank relative to that plate, does it? A. Oh, I don't think much. Of course if it was a quite tight fit it might assist in preventing any flexing. [717] Q. If it was quite a tight fit you say it might prevent flexion? A. I say if it was quite tight it might tend to prevent possible flexing of the shaft at that point which might otherwise tend to appear.

Q. It would have to be very, very tight, would it not? A. Well, that is relative. I think quite tight is just as accurate as very, very tight.

Q. Now let's go back to the positions of the hinge member and the shank and the movements thereof and the bending of the Glencoe shank that would take place. Let's go first from its position for traveling and then putting it into the ground and plowing, and what would happen when it struck an immovable object such as a rock? Will you tell us about it? A. I don't quite understand what you mean to say "let's go back to that." What do you mean?

Q. Let's go back and tell us about the movements, the positioning of the shank and the hinged member from the traveling position of the Glencoe structure, get into the plowing, and then when it hits an obstruction. A. Well, in traveling the position would be as shown in Figures 1 and 2 of those drawings on Defendants' Exhibit 11.

Q. And the shank would be supported by its resting on the [718] plate of the hinge member? A. That is correct.

Q. Now, when we put the end of the tool into the ground and have some rearward and upward force in plowing operations what would be the action? A. Well, the force, probably would be depending on how much force. If there was sufficient force it might tend to—well, it would tend to rotate the shank and the hinged member about the pivot pin 8. In that case it would tend at least to push the shank against the loop or stirrup 29.

Q. Push it up? A. Might or might not, depending on the amount of the force and the tightness of the holding. But there would be a tendency to, a force tending to push it up.

Q. And then when it strikes an immovable object like a rock, what would happen? A. The same thing only to a greater extent, the force would be greater. Probably in ordinary plowing if it did open up at all that would depend on the amount of tension in the spring or the amount of compression in the spring. The springs might be so adjusted that although there was a tendency for the hinged member to rotate clockwise it would not be allowed to rotate. When it hit an obstruction with a severe force the [719] spring would be compressed and there would be undoubtedly some movement in a clockwise direction of the hinged member.

Q. These springs that we have on the defendants' structure, like in Defendants' Exhibit 27-A, they are pretty strong springs, aren't they? A. Relatively so, yes, sir.

Q. In order for the shank to jump a rock or the tool to jump a rock, you might have to compress these springs down to where it would open up as much as four inches, is that right? A. I think that is a possibility.

Q. And you might get into the question of forces that would be substantial then, wouldn't you? A. Oh, I think all of the forces in connection with these plows are what would be classified in my vocabulary as substantial.

Q. To get this particular 100 series clamp to open up to that extent you would probably have a force acting on the front of this place of in the nature of four to five thousand pounds, wouldn't you? A. Well, I believe that is perhaps a little bit excessive, but at least it might well go up close to that figure.

Q. Some of these plows have been found to go up to that figure, haven't they, four thousand pounds or so? [720] A. Up to four thousand pounds or so?

Q. Yes. A. Yes, I would say up to four thousand pounds or so.

Q. And could even be more in some instances? A. Well, that is a possibility, I presume.

Q. So we are talking about very substantial forces then here, aren't we? A. Yes, all of the forces here are substantial.

Q. When we talk about four thousand pounds we can bend one of these shanks too, can't we? A. Well, it is possible, depending upon just how it is applied and the reactions. I don't believe that four thousand pounds would necessarily put a permanent set in these shanks.

Q. Not necessarily put a permanent set in it, but it would certainly cause flexing of the shanks, wouldn't it? A. Oh, certainly.

Q. I believe you suggested the elements that you listed in Defendants' Exhibit 11 were in the same environment as the Graham 798 structure. You had in mind that they would be used on agricultural implements? A. Well, that was not what I was thinking about. I was thinking about the relationship of hinged members and plates and springs to give a spring clamp which certainly, as far as its over-all general operation and [721] functioning, was quite similar, as distinguished from merely perhaps going out and picking up a spring which was on a—well, a coil spring out of an old automobile engine or even a coil spring out of the front wheel spring of an automobile, or something like that, where the functioning and the environment was quite definitely different.

Q. These structures that you have shown there are different considerably in each case from the Graham 798, aren't they? A. Oh, they differ in detail certainly.

Q. Now, let's turn to Defendants' Exhibit 19.

* * *

(Recess.)

Q. (By Mr. Gold) Mr. Fishleigh, we now have Defendants' Exhibit 19 on the easel. I note that you show

an illustration of the Carter patent, No. 231,268. That relates to a harrow tooth device, doesn't it? A. Yes, a spring harrow tooth.

Q. Did you ever see a device—the Carter device in actual use? A. No, sir.

Q. The Carter patent doesn't show any elongated plate on a [722] hinge member or movable member, does it? A. No, sir.

Q. I believe you said that the sides of the member colored dark green on the Carter drawing would be pulled together by bolts to clamp the shank in place, is that right? A. I believe that is correct, yes, sir.

Q. You didn't find that in the Carter specification, did you? A. I don't think I found the detail of that described there, no.

Q. The Carter patent doesn't tell how the shank is held in place, does it? A. No.

Q. Can you read the claims of the Graham 798 patent on the Carter disclosure? A. No.

Q. The use of the Carter drawing on Defendants' Exhibit 19 shows how broad you characterized those elements in your evaluation of the prior art, isn't that right? A. Well, I am not evaluating elements, I am simply showing different methods of connecting shanks to shank attaching members, as illustrated there.

Q. In order to show something which you would fasten the shank to? [723] A. Well, that is what the chart is intended to show, the different methods of it.

Q. The part colored dark green in Fig. 2 of the Carter drawings doesn't even look like the part of that color in Fig. 1, does it? A. Well, it doesn't look precisely that way, but the perspective is not what I would consider a good perspective.

Q. It could be two different forms? A. I don't think so, because the parts are quite similar and the description carries over, but certainly it doesn't look as I would want one of my draftsmen to draw in perspective, but I believe it is intended to be. In fact, the patent says it is a perspective of the block in which the tooth is held. It doesn't say it is a modification or anything different.

Q. Now, if you will look at the part marked with the letter "E" in the Carter illustration, that extends over the top of the part that you marked or colored dark green, doesn't it? A. Yes.

Q. And that would tend to keep the part colored dark green from pivoting then, wouldn't it? A. No, I don't think it would.

Q. It would just ride up over the edge of that part that [724] extends up over the top of it? A. No, if we look at that part in Fig. 3 we see that there is an opening there to permit the portion of the part "G" back of the pivot pin "L" to go up through.

Q. Are you referring to Fig. 3 of the patent drawings, in the patent itself? A. Yes.

Q. You say that that has an opening that would be up at the top in the part that I have indicated over the dark green portion in Defendants' Exhibit 19? A. I am sorry, I have been looking at the other end of it there.

Q. The part that is in the Fig. 3 is upside down actually from what it would be in Fig. 1, isn't it? A. That is right, yes.

Q. So that opening you referred to would be on the bottom part of the member "E" then? A. That is correct.

Q. In view of that, what about the part over the top of the dark green portion, would that interfere with the pivoting action? A. Well, it can pivot about that to some extent. It might interfere with it if it is there just as shown, that is, pivoting about the pin "L" precisely, if that is precisely.

[725] Q. It would probably have to slide back and forth in any pivoting or rocking action, wouldn't it? A. Well, it would depend on just where the pivot was with respect to that overhanging portion.

Q. You didn't have any difficulty interpreting the structure of that patent? A. Not to speak of.

Q. And considering a bolt or a rivet or a set screw for connecting a shank to some other part doesn't mean much unless its relationship and forces applied to it are also considered, isn't that right? A. I guess as broadly as you ask it I would say yes.

Q. Let's take the teachings of the Carter patent to modify the Petersen device. It would be quite difficult to substitute the part of Carter that you have called the shank attaching member for the dark green part 7 of Petersen, wouldn't it? A. Oh, I think so. They are quite dissimilar structures.

Q. It would be a very difficult modification? A. Quite a different type of structure.

Q. It would have a complete reconstruction almost, wouldn't it? A. Well, I don't think—it doesn't occur to me where you would want that particular substitution that you refer to.

[726] Q. There would be nothing to indicate that you should make such a substitution, would there? A. Of the hinged member of the Carter and Petersen?

Q. Yes. A. Well, I see no reason for it, at least.

Q. About all your Exhibit 19 shows is that bolts, rivets and set screws are old in the art? A. No, I don't think that is a fair statement of it at all. What it shows, if I may indicate my thought of it, is that there have been in the art various and sundry means of connecting shanks or various and sundry spring clamps having some means for connecting the shank to the shank attaching member, and as carried out into some detail, some of them, such as Rix, Glencoe and Cobb, in which the type of structure used for that connection and its relationship is very close, very similar to that of the 798, if not substantially identical.

Q. Actually then you are presenting that chart to give us some teachings of the prior art that we should use to modify other prior art then? A. No, that isn't what the chart says. It just shows what is old in the prior art along this line and how close some of it comes, which would indicate how little of a contribution, if any, had been made in that respect [727] at least in the 798 patent.

Q. Now, supposing you take the Carter teachings to modify the Cobb structure. Can you tell us about that? A. No, I haven't made any suggestion of modifying Cobb with Carter. I feel in that instance that they are rather different structures and do not particularly adapt themselves to interchanging.

Q. You would say the same thing relative to following the teachings of Carter to modify the Rix structure, wouldn't you? A. Oh, I think as far as Carter is concerned that is perhaps the furthest type from the type of thing we are talking about, but still is one method of connecting a shank to the shank attaching member.

Q. And it doesn't teach us very much then on modifying any of these other prior art structures? A. No, I don't think that it does.

Q. I now place Defendants' Exhibit 20 on the easel. You also show Carter on that exhibit, don't you? A. Yes.

Q. In that exhibit you are considering positions of parts without regard to the direction of the forces that are applied in operation, isn't that right? A. Oh, I think so. I am figuring the structural positions of them.

[728] Q. In the Rix structure the loop is integral with the member "c"? It is all one piece? A. That is correct.

Q. You didn't follow that same theory of coloring in connection with Cobb, did you? A. Well, there should be no difference in the coloring. Actually the loop in line with our general showing has been colored light green and it should have been in Cobb as well. If not, it is just an error in possibly coloring this particular chart or in my approval of the chart. But the portion corresponding to the loop in Glencoe, Rix and Cobb should have been colored light green.

Q. Of course in Defendants' Exhibit 20 you didn't color the loop part of the Rix structure, did you? A. No.

Q. Nor in the Petersen structure? A. No, because we were pointing out that portion of it which was between the shank and the fixed member. However, it could have been colored and it would not have detracted from it at all, and certainly it is not intended to show anything different.

Q. I believe on your direct testimony you read some parts of the Graham 798 file wrapper, but you don't know how the examiner interpreted those statements, do you? [729] A. No, certainly not.

Q. You also mentioned that the file wrapper showed there was two personal interviews with the examiner, and

you don't know all that was said at the interviews to bring out the advantages of the 798 structure? A. No, I am sorry to say that the details of those interviews were not recorded in the file wrapper.

Q. You don't know anything about any distinction as to the forces and the flexion of the shank? A. No. I assume in that last question you mean that I don't know anything about what distinctions of that nature were brought out in the interviews?

Q. That is right. A. O. K.

Q. Now I have placed on the easel Defendants' Exhibit 22. That shows Claim 1 of the 798 patent, I believe, does it not? A. Yes, broken down into its mechanical elements.

Q. You show the underface of the fixed member as being red? A. Yes.

Q. There is nothing in the Claim 1 to define the extent of that underface, is there? A. Not extent, but that is the underface and there is nothing in the claim to indicate that it refers to [730] only a portion of the underface.

Q. You could reduce the area that you have marked red, the area of the underface, and still get a response for that part of the claim, couldn't you? A. Well, if somewhere in the specification or file wrapper there had been a statement to the effect that when we say underface we mean just that portion of the fixed member back of the spring bolt, or something of that sort, then that could have been taken that way. But when I read the specification and particularly the file wrapper, when it says that that underface extends substantially the full length of the fixed member, I can arrive at no such conclusion as you suggest.

Q. Of course if we cut out that part behind the bolt that is in the fixed member, the part then forward of that that you color red would still be a part of the fixed member, would it not? A. As it stands here it would be a part of the underface of the fixed member.

Q. And it would still be longitudinally of the fixed member, would it not? A. That part of it perhaps could still be described that way if it were so pointed out.

Q. The claim element says, "A fixed member adapted to be [731] fixed to the transverse member of the frame

and having a longitudinally extending underface terminating forwardly of the transverse member to which said mounting is adapted to be fixed." Now, if I have eliminated that portion to the rear of this bolt that you have colored yellow in the fixed member I would have a response to that portion of the claim, would I not ? A. Well, you might have a response, but what this chart shows is what is the response in the structures shown in the Graham patent, and without question the way it is shown in the drawings and with a limited explanation there is in the specification and the detailed explanation when that language was added to the claim in the file wrapper indicates that the response in this structure is that entire portion colored red.

Q. That was added to what claim in the file wrapper? A. Well, this language went in—

Q. I believe you said it was added to the claims in the file wrapper. I want to know which claim was added. A. When it came in it was added to the file wrapper or the claims when this Claim 13 came in, it was a new feature in Claim 13, or a new limitation.

Q. Would there have been other features prior to that time in Claim 13? A. No, Claim 13 was a new claim or rewritten, but [732] incorporating that limitation for the first time in the file wrapper.

Q. Did the file wrapper say that claim was rewritten from some other claim? A. No, I don't think it was.

Q. Just a new claim that was put into the case? A. That is right, incorporating the results, as I recall it, of these two interviews.

Q. Then as to your chart, Defendants' Exhibit 22, you are applying the elements of the claim and interpreting them in the very narrow condition of only what is disclosed in the—the particular embodiment as disclosed in the drawings? A. Oh, as to those claims that is exactly what it does. It points out what, in the structure illustrated in the drawings and described in the specification, provides the response for those elements. It does not at that point indicate anything about any possible breadth to those elements which might be given them in applying them to some other structure.

Q. In this case it is merely to show that the claim can be read on the Graham disclosure? A. Well, more particularly to show what structure in the Graham disclosure does provide the basis for that element, what is the element, structural element in the [733] structure disclosed in Graham which is there being described.

Q. There is no attempt to give any scope to the claim or any limitations to the claim, it merely is applying the elements to the Graham structure and no requirement that it has to include those particular elements in that form? A. Well, that might come later as to how broad a scope, particularly on some of these so-called means clauses.

Q. That would be on your other charts? A. Well, nowhere have I indicated the entire scope on it. I have simply indicated on some of the other charts where I think a scope could not be given to it, to an element, broad enough to cover certain portions of the two accused structures.

Q. Now, in connection with the element that you numbered 4 in the breakdown of the claim, you have means connecting the elongated plate portion with the shank and you have in a little circled part in the center between the illustration and the claim the bolt 56, as colored light green. You also have colored the loop light green and drawn an arrow there. Do I understant that as far as this chart is concerned you are merely saying that those two could be the means that is called for in that claim? [734] A. No, sir, that is not what I am saying. I am saying that those two are the means as disclosed in this Graham structure, which provide the response for that element.

Q. And of course we do agree that the bolt, when it is tight, will maintain the shank in contact constantly and continuously at the front of a hinge member? A. Right under the bolt?

Q. Yes, sir. A. Oh, I think there is no question about that.

Q. And that would be the constant continuous contact that is referred to in that element of the claim? A. I don't believe so at all. I believe that would be a most distorted understanding of it.

Q. That would be a response, would it not? A. No, I don't think so, and certainly as far as this claim is concerned it is not the response of the structure shown in the drawings.

Q. That particular element, reading the entire element, "Means connecting the elongated plate portion with the shank for maintaining the upper face of the shank in constant continuous contact with the underface of said plate portion of the shank attaching member," there is an underface of the plate portion there near that bolt at the forward end, is there not? [735] A. A part of an underface.

Q. It is an underface, is it not? A. A part of the underface.

Q. The shank also has an upper face in that particular area? A. Well, there is a portion at that particular area which is a part of the upper face of the shank.

Q. And do you think that that bolt can hold the shank by itself in operative position relative to that hinge member? A. Well, it calls there for a constant continuous—

Q. I ask you in your opinion could the bolt by itself hold the shank in an operating position relative to that hinge plate member? A. During static conditions I think it might. During operative conditions I am quite certain, when subjected to the type of operating conditions for which it is intended, that it would not.

Q. Now when you say operating conditions for which it is intended, are you thinking about these cultivator conditions which you brought forth in the prior art? A. In this particular instance I am thinking about the conditions which the Graham structure itself is set up for.

Q. For plowing? [736] A. That is correct.

Q. Quite severe stress compared to these harrows and cultivators? A. Well, not necessarily so, because the abnormal conditions which might be encountered in the course of harrowing or cultivating, even though one is doing normally relatively light work, if one hits an obstruction it could be quite severe, although clearly I think there is no question that under normal operating conditions, when you don't need this spring clamp or spring trip de-

vice, that the loads are lighter in cultivating and harrowing.

Q. And in the Graham structure you have to have the support of the loop, the bolt itself wouldn't perform, but in the Petersen structure you can even have a set screw loose and it would still operate? Wasn't that your testimon? A. Not exactly, no.

Q. Didn't you testify awhile ago that the Petersen structure would still operate even though the set screw might be loose? A. I said it would operate, but you didn't ask me whether or not this Graham would operate. You asked me whether it would be held in constant continuous contact.

Q. I asked you by itself. [737] A. Yes, by itself, it would be held in—

Q. It would hold it in operative position without the loop? A. Well, that isn't saying whether or not for light work it would operate. It would not do what is said there to hold it in constant continuous contact.

Q. But it would hold it in constant continuous contact at this forward portion? A. Until it broke.

Q. Oh, you think it would break? A. I am quite reasonably certain, if subjected to the type of load for which this type of spring clamp is intended, it would probably break.

Q. And if this Petersen structure was subjected to such load it would probably break too, wouldn't it? A. Not necessarily. There are not the severity of stresses in that structure that there would be in this one, in this 798 structure.

Q. It wouldn't be subjected to the same kind of loading as the Graham would in plowing? A. Well, what I am saying is that if subjected to the same loading, hitting the same obstruction, that if you had just the one bolt back toward the back in that position that you would have quite a different situation than you would have over in Petersen and one [738] which would be much more likely to break apart in that condition.

Q. Do I understand you to say that if in the Graham structure you had one bolt back toward the rear portion

that you would have more tendency for it to break? A. Well, I misspoke. I think of it in the sense here, it is really the forward portion of the shank in our normal nomenclature. I am talking about the bolt in the position in which it is there in that drawing.

Q. Tell us the function of the area that you have colored red on the fixed member and the hinged plate member. A. Those are the two faces that are referred to so frequently, the underface of the fixed member and the upper face of the hinged member in these drawings, at least, as to the fixed member they appear only as a line indication, but actually is a substantial surface, and on the hinged member, as shown in the view on the main chart under the flap, it is a substantial surface and that serves here as the stop member to stop the movement of the hinged member and to position the plow in normal operating position.

Q. And if we eliminated the contacting faces to the rear of this bolt that you have colored yellow on the fixed member, so that we only had the contacting faces at the forward part, it would still be a stop to hold [739] it in what you call the home base position? A. That is correct.

Q. So the area makes no difference as to the function? A. Well, that is my view. That didn't seem to be the slant when this limitation was first introduced and emphasized as distinguishing from other structures.

Q. Then that reduced area would be the equivalent of the larger area, as far as the functioning of that clamp? A. In the sense of this patent in suit I would say no.

Q. It wouldn't be the equivalent, wouldn't function in the same manner? A. In the sense of this patent, that is, equivalents, mechanical equivalents, are something that you consider in the light of the situation you are discussing, that is, if—

Q. We are just talking about these two faces now, Mr. Fishleigh, what they will do. A. But to be of any meaning at all you have to consider them in a given context. Out in the shop there might be some similarity, but in the sense that we are talking here, which is the only sense that could have any meaning as to whether or not such

a surface is the mechanical equivalent of what is called for in the element of the claim, I say quite definitely no.

Q. Then you are again willing to construe the claim as [740] being required to read only on the specific form shown in the drawings of Graham 798? A. That isn't it exactly. As disclosed in the patent there is only one form shown and that is what the element clearly is directed to and reads upon and finds a response in. Now, under those general circumstances, to find the breadth it can only be said to cover those things which are the same as or the mechanical equivalents, and what is a mechanical equivalent under this circumstance must be measured in the light of the possible advance or the advance, if any, of this structure. That is, if one makes an advance which might be measured, say, as a thousandth of an inch in the art, you can't then go back and cover something, a breadth of a tenth of an inch, even though under some other conditions they might seem to be quite comparable structures. In other words, you can't go back or beyond the point that the advance started from.

Q. I believe you did agree, though, that if we shortened up the area of the contacting faces that they would perform the stop in the same manner? A. I agreed to that, yes, sir. They would perform the stop. I didn't say in the same manner. I said it would perform a stop function.

Q. Tell us any difference in the manner that they would [741] perform the stop function. A. Well, it would be a shorter surface and to the extent that having the longer surface here created any improvement or any advance which helped to carry these claims after claims without that limitation had been rejected, well, then to that extent there is a difference. Personally I see very little improvement in it and very little that warranted the patent, but there it is.

Q. The smaller area of the contacting faces would cause a little more impact force per unit area—or I mean per total area, isn't that right, over what you would have in a larger area? A. May I have that again?

Q. Maybe I had better repeat it. By having a smaller area of your contacting faces with the same impact forces applied, you would merely have a little greater unit

stress in those contacting faces, wouldn't you? A. You would have a greater stress. Whether it would be a little greater in the instance you are talking about, I would suspect it would be roughly two and a half to two times greater. But it would be greater.

Q. It would be directly proportionate to the difference in area, wouldn't it? A. To the area, yes, sir, inversely proportional to the areas, I would say.

[742] Q. That is correct. Tell us the purpose of the patent specification. A. Well, ordinarily the patent specification starts out by perhaps describing what the patent—

Q. I asked you what was the purpose of the specification. A. That is what I—

Q. Not its contents, just tell me the purpose of it. A. Well, that is what I thought I was doing, as there are several purposes, as I see it. Three that I had in mind.

Q. Go ahead. A. First, to set forth what the inventor thought was the problem that he was directing his attention to. Second, normally he sets forth the objects, what he hopes to accomplish with his particular invention, what the objects of it are, and third, he describes the structure, one or more forms of the structure which he believes accomplishes the objects of his invention. Normally in what might be called his preferred form.

Q. It is to provide a description of an embodiment of the invention, isn't that right? A. The third portion is to provide the description of one embodiment, yes.

Q. And you have drawings usually in a mechanical device in the application to show the embodiment of the [743] invention, that one embodiment? A. That is correct.

Q. But it is recognized there can be variations from that embodiment, isn't it? A. Within limitations, yes, sir.

Q. If the patent were limited to the precise form shown in the drawings and described in the specification, the patent would have little value, wouldn't it? A. I believe that is correct.

Q. All patents are entitled to some range of equivalency, aren't they? A. Yes, sir.

* * *

[744] Q. (By Mr. Gold) Now, Defendants' Exhibit 23 is very similar to Defendants' Exhibit 22 except it deals with Claim 2 of the Graham 798 patent, is that right? [745] A. Yes, sir.

Q. Now, in your two charts, Defendants' Exhibits 22 and 23, in effect you interpreted the claims as having the same scope, didn't you? A. Well, as finding a response in the same structure because there is only one structure there and there isn't any great difference in the terminology in the claims.

Q. So you didn't really differentiate between the two claims? A. Well, there isn't any great differentiation in the application to the structure shown in the patent. Now, there might be some difference in the equivalents. I believe that perhaps Claim 2 might be narrower in certain respects as far as what might be called equivalents, but it applies to the same structure. In the patent there is only one.

* * *

[746] Q. Mr. Fishleigh, I have placed on the easel Defendants' Exhibit 24. In that exhibit you used your own words to describe the parts of the Jeoffroy SC-580 device, didn't you? A. Yes, except that those words for the most part were borrowed from the mechanical elements of the claims.

Q. Of the Graham 798? A. That is correct.

Q. And that was also true in describing the parts of Rix? A. Yes.

Q. Took a great deal of time and work to devise a chart of that nature, didn't it? A. Oh, that is a relative term. It wasn't done in five minutes, but it wasn't an extremely difficult problem.

Q. Now, in the change that you are suggesting I believe that the first change in Jeoffroy was to move the ears on the fixed member rearwardly and upwardly. Is that right? A. Yes. That is the first one in point of order in—

Q. Let's just stop at that point and we will move those ears upwardly. Now tell us what would be necessary in the Jeoffroy structure to pivot the fulcrum plate?

Mr. Morris: Just upwardly or upwardly and rearwardly?

Q. (By Mr. Gold) Upwardly and rearwardly, and with those [747] ears up I would like to know the changes necessary to pivot the fulcrum plate in that Jeoffroy structure.

Mr. Morris: All I am asking is—you started off with upwardly and rearwardly and now your question is upwardly. Do you intend to incorporate both or just one?

Mr. Gold: Yes, let's incorporate both, so we will have both done at one time.

Mr. Morris: All right.

A. Well, if just that were done alone you would have to either put a different pivoting arrangement on the fulcrum plate or put it in a different position. It is not suggested that that be done without the other movement.

Q. Well, we are going to make these modifications and I wanted to take them one at a time, Mr. Fishleigh, and have you tell me what next changes you would have to make to make that structure operative, when you move the ears rearwardly and upwardly on the Jeoffroy SC-580 structure. A. You mean to make it operative with just making one change at a time?

Q. Yes, sir. A. Well, I don't think it was contemplated that it would be that way. In fact, the reason for moving the ears [748] upwardly and rearwardly was to shift the position of the pivot to fit the situation when the shank was placed below the shank attaching member.

Q. In other words, you took the Graham 798 structure and worked backwardly to see what kind of changes you might be able to dig up on some structure to make the 798? A. In this instance that wasn't the way it was really done. I had previously suggested a good part of this structure many years ago, and what I sat down here to do was to see if there was in the prior art any one or more structures which would fit into the picture which I had developed, at least in major part, back in 1951, without the benefit as of that time of thinking of it in terms of prior art.

Q. Of course you have already testified that the structure you had in mind then was the Graham 811 with two

bolts through the shank and the fulcrum plate with the shank still on top or above the fulcrum plate. A. That was the detail of the structure then. The general terms of it were to fasten the shank to the fulcrum plate and the question of putting the pivot point above instead of below the pivoted structure.

Q. Now you are describing a new model that wasn't the one that you had in the first Graham case? A. No, I am describing the general considerations which [749] were carried out in a specific simple form in that model, which only incorporated part of it. It did not incorporate the change in the pivot point, although that was certainly discussed at that time.

Q. Then it would be quite difficult for you to reconstruct the Jeoffroy device merely to move the ears upwardly and rearwardly and still pivot the fulcrum plate? A. Oh, it wouldn't be too difficult, but that was not the idea that we had in this instance. You could put them up there and put corresponding ears straddling the shank if you were going to leave it just that way, somewhat after the fashion that the Rix ears straddle the other portion of the pivoting member and carry them up there. If that was all that was wanted. But that was not what we were doing.

Q. Now, if you were going to move these ears upwardly and rearwardly, the fulcrum plate would still be below the shank? The ears on Rix do not straddle the shank, do they? A. No, I didn't say they did. I said as they straddle the other device, but you could put them here so that they would straddle the shank if you wanted to do that; but that was not what we were doing with it in this instance.

Q. You wouldn't find any advantages in making that one [750] change, would you? A. Oh, there might be. Actually that was a change which was suggested to permit of some of the others, more to fit in with them rather than as a particular step in and of itself.

Q. Now, when we consider the Rix structure, particularly the forces acting on it, we wouldn't find any need to move the ears upwardly and rearwardly if we merely turned this thing down to where we would have the same relative forces, the ears would still be underneath and the

shank would be above the fulcrum plate, wouldn't it? A. Well, we get to forces both ways and in all of these structures at one time they are one direction and another time they are another direction. It is true that in one instance we may be putting it so that the rebound forces are in the direction of the working forces in the other situations, but that is not the controlling factor at all.

Q. When we consider the forces that result from the actual pulling of the device through the ground and the direction of those forces in the Rix structure, if you would turn that so that the plate of the hinge member was horizontal then the shank would be above the fulcrum plate, so if we are going to change the Jeoffroy structure we don't [751] need to move the ears upwardly and rearwardly, do we? A. Well, if you were going to do it that way, if there were some other way, that is possibly correct.

Q. That would be following the teachings of the Rix patent, wouldn't it? A. No, I don't think necessarily.

Q. Isn't that the teachings with the particular forces that are applied, and all, to put it in the same general relationship and orientation, when you start to incorporate a part out of the Rix patent into the Jeoffroy SC-580 structure? A. No. In my opinion you are stressing one facet of it, which happens to be true, and disregarding all the other arrangements which, as I see it, are much more natural. That is, you will have the beam member and the fixed member and it would be much more natural to me, if I were going to do it, to simply turn the structure as a starting point of the part that we are following, and it would certainly indicate the teaching to turn the portion in Fig. 1 ninety degrees clockwise and then we would have a situation quite comparable to what I have shown, and that certainly seemed very logical to me, and under that circumstance you may have some difference in application of forces. Of course you have a change when you turn it 90 degrees, but that certainly seemed [752] logical to me rather than to try to make some force analysis and put it in an unlikely position in order to maintain a particular force arrangement.

Q. In your design work then you don't make force analysis and try to follow the tried and true force arrange-

ment in the other devices that you might be following the teaching of? A. Well, that is pretty complicated. We of course consider forces but we don't figure, in working from one structure to another, that the force of direction must be the same at this point and the same at another point when it might just as well be reversed and give us a satisfactory result.

Q. Of course now if we only have the Jeoffroy structure and the Rix structure before us, that is what we have here on this chart, Defendants' Exhibit 24, and I would assume that we are following the teaching of those two devices to perform some modification. Now, is that your theory? A. That is correct, and I think that we are. We take either Fig. 1 or Fig. 3—well, I am mistaken, it is Fig. 2 and Fig. 3 of Rix and we just turn them 90 degrees clockwise.

Q. And reverse the application of the forces that are applied to them in their operation? [753] A. It is going into a somewhat different detailed tool application and if the detail of the force arrangement shifts I don't think that that is the controlling factor when that otherwise would require a rather severe structural rearrangement.

Q. And of course when you had the Graham 798 patent before you, that was a simple modification that you can make in those two structures? Is that right? A. Well, if that was the way it worked out that might well be it, and if you had these two structures before you, as I had them, it would be a quite simple modification, even without the Graham structure.

Q. Now, of course we have another structure before us, Mr. Fishleigh, the Glencoe structure. Now we can take the Jeoffroy structure, the ears depend from the fixed member, that is the same as we have in the Glencoe structure, isn't it? A. That is right.

Q. We don't have to move those ears, do we? A. Quite similar.

Q. So we don't have to move the ears in the Jeoffroy structure very much there, do we? A. Not a great deal.

Q. Now we can take the Rix structure without reversing the forces and take the plate to the hinge member and the [754] shank, where the same direction of force is ap-

plied, the loop would be above the plate portion and the shank would be above the plate portion, just like we have in Glencoe, don't we? A. If we did it that way, and then you would have it in the relative position of the shank with respect to the beam and the fixed member and the hinged member, you would be reversing that, so that would be quite contrary to the teachings of Rix.

Q. But we have still used the same forces, we have merely taken the device with the same application of forces and placed it in the Jeoffroy structure and we end up with Glencoe? A. Well, stressing the same forces and disregarding the structural arrangement you could arrive at that and if you then had Glencoe that would be what you would have would be Glencoe, and that is it.

Q. That would be a rather simple modification of structure to follow the teachings of those two prior devices, wouldn't it? A. Well, that depends, I presume, on the viewpoint. No more simple to me, where you turn over the entire structure, than to put it in the way we have talked about here.

Q. And of course if we had the Glencoe patent in issue [755] here it would be very simple then to make that change from the Rix and the Jeoffroy structures, wouldn't it? A. It is possible.

Q. Of course with that change to make the Glencoe structure we would still have the shank in the same relative position of the fulcrum plate and fixed member as we had in Jeoffroy to start with, wouldn't we? A. Yes. But different to what you had in Rix.

Q. But the same application of forces as we had in Rix? Is that right? A. In certain details, yes.

Q. Now, you show this reconstructed device in the lower right-hand corner of Defendants' Exhibit 24? A. Yes.

Q. And I believe you have a claim with a number of "yeses," that is Claim 1, I believe, isn't it? You have "Yes" all up and down for each element, so that device finds a response to each element of the Graham Claim 1, is that right? A. Well, I think I pointed out in that connection that it does with a broad construction of certain of the elements following the construction of the applica-

tion that has been followed here in an attempt to find response in the accused structures.

Q. And your chart shows that you found each element, you [756] have "Yes" in this column along the right-hand side of the breakdown of the claims? You have "Yes" in each one of those? A. That is right, construing them in that broad way that the plaintiff construed them to find response in the accused structures.

Q. Now then, you also have "Yes" on each element of Claim 2 so that you find response in this structure you reproduced at the lower right-hand corner of Defendants' Exhibit 24? A. Yes, with that limitation that I have mentioned.

* * *

The Court: Court will be in recess until 10 o'clock in the morning.

(Adjournment.)

---

[757] MORNING SESSION, WEDNESDAY, MAY 9, 1962

CLARENCE T. FISHLEIGH resumed the stand and testified further as follows:

Cross-Examination by Mr. Gold (Continued.)

Q. Mr. Fishleigh, you have read the Cockshutt record, haven't you? A. Not in detail, no, sir.

Q. You have read it sufficiently to know that the District Court and the Court of Appeals of the Fifth Circuit had all the facts regarding the prior art that is before the Court here, didn't you? A. Well, I am not certain as to that, but I think they had the same material, whether they had the complete facts I am not sure.

Q. In your opinion was the Glencoe device invention over the prior art? A. I have made no study of that, sir, as to whether there was any patentable invention in it, and I haven't had before me the complete prior art as it was applicable to Glencoe. I am not prepared to answer that.

Q. Considering the prior art that we have before us here, in your opinion would the Glencoe device be invention? A. On a broad basis—of course we wouldn't think so. [758] Whether there are some portions of it, some details that would be inventive, I am not certain, and certainly not, as I haven't considered the structures as disclosed in the Rolf patents.

Q. In your opinion was the Hunter device invention over the prior art?

Mr. Morris: Your Honor, I think I am going to object to the continuous examination along this line. The ultimate question of invention is certainly a question of combined law and fact for determination by the Court. It requires the application of a statutory test. It requires the application of the tests as laid down by the courts, and whether or not a given witness, Mr. Fishleigh or any other witness, can apply the entire statutory test and the tests laid down by the courts or is applying such a test or such tests seems to me to be far beyond the realm of proper expert opinion.

The question of invention, validity and infringement are combined law and fact questions. Now, they are not the same thing, what a skilled artisan could do or what the art shows or the functioning or operation or even the existence of mechanical elements, it requires the exercise of the final determination of the ultimate issue that this Court is going to be [759] called upon to decide.

The Court: I would think so.

Mr. Gold: Apparently Mr. Morris is objecting to the use of the word invention. Maybe I can rephrase the question and ask Mr. Fishleigh if in his opinion the Hunter device would have been obvious to anyone skilled in the art in view of the prior art that we have before us.

Q. (By Mr. Gold) Can you answer that question, Mr. Fishleigh? A. I am inclined to think that it probably would have.

Q. We have Defendants' Exhibits 24 and 25 on the easel. Yesterday we were discussing Defendants' Exhibit 24 to some extent. I believe that you stated that you would want to turn the Jeoffroy shank and attaching mem-

ber over so the shank would be under the plate. Is that right? A. I didn't understand the whole question.

(Question read.)

A. Well, it would—from one approach it would amount to that. What I said was that I would mount it in the way that Rix did, with the plate between the shank and the fixed portion of the frame member. That in effect amounts to turning the plate and shank over so that the plate is above the shank.

[760] Q. Of course we could turn the Rix structure 90 degrees to the left as well as 90 degrees to the right, couldn't we? A. Yes. It would still be the same. The plate member would still be between the fixed member and the frame and the shank.

Q. Of course in that case it would be above the shank? I am sorry—the shank would be above the plate member? A. Well, if it were put—structurally it would be above but the plate would still be between the shank and the frame member. If it were so lined up that it could be satisfactorily made to work that way.

Q. Then of course the ears on the plate member would be downwardly so that the pivot pin in that instance would be below the shank, wouldn't it? A. Yes, but still on the opposite side of the plate from the shank and toward the fixed member.

Q. That would be down like it is where the ears are in the Jeoffroy SC-580 clamp? A. No, because if we were going to make that arrangement it would necessitate that we would have turned the Jeoffroy structure over to be working on it, too. If we were going to assume that situation.

Q. And of course that is just merely assuming some kind of positions without regard to any application of forces? [761] A. Well, this latter part certainly is.

Q. You want to disregard the application of the forces in all your modifications that you have suggested in Exhibit 24? A. Oh, I don't think it is a question of disregarding them, but not accepting those as the one sole controlling factor. Naturally forces would vary, depending on what you do with it.

Q. But you would make your modification and reverse the application of the forces to the shank and plate member? A. Yes. I would make my modification in line with the structural arrangements and if it happened that there was a change of forces so that the force on one was at a little different time than it was at a previous time and vice versa, I wouldn't be particularly disturbed by that.

* * *

[763] Q. (By Mr. Gold) Look at Defendants' Exhibit 25. On that chart you are showing the work that would be required to redesign the 811 structure to make the 798 structure, aren't you? A. Well, I have shown certain modifications which could be made in the light of the prior art, and if they were made it would come out with a structure which was quite similar to 798 and would provide a response to the mechanical elements of the claims.

Q. I believe you said here in a note in the center of your chart, "Use the Graham 2,493,311 mounting M including the fixed member 41, shank attaching member 63, pivot pin 62, coil spring 66 and rod means 71." But you didn't say anything about how you would move the ears on that structure, did you? A. I don't think it was mentioned, but it would of course be done in the same manner as we talked of before. That is, the ears would have to be shifted to place the [764] pivot pin in the proper place for the pivot pin when the shank was turned over.

Q. At least that is what you have done in the modified form that you show down in the lower right-hand corner, you have moved the ears upward and rearwardly? A. That is correct.

Q. In other words, you did it exactly like you did in the Jeoffroy SC-580 clamp on your Defendants' Exhibit 24? A. Substantially so, yes.

Q. Now then, you are going to take the Petersen patent, the teachings of Petersen, I guess, to make a modification of this 811, is that right? A. Yes, the teaching of putting the fulcrum member or hinged member between the shank and the fixed member.

Q. Now of course if we are going to do that we ought to take this whole hinged member from Petersen and put

it over in Graham 811, shouldn't we? A. Oh, I don't think so. That isn't what I suggested, that you use that particular shank member. I am saying that that is the basic teaching of Petersen, to have the hinged member between the shank and the fixed member, and without substantial modification—in other words, put it another way, following the teaching of Petersen we simply turn the shank and hinged member of 811 over.

Q. In the 811 structure the forces acting on the shank at [765] the rear of the fulcrum plate are upwardly or in a direction opposite to the engaged faces of the shank and the fulcrum plate? A. That is correct.

Q. I believe we agreed that in the Petersen structure the forces acting on the shank would be in the same direction as in Graham, in a direction opposite to the engaged faces of the shank and the hinge member plate? A. At the back end, that is correct, in that position.

Q. And that was also true of the forces as applied to Jeoffroy, they were just like they were in the Graham 811, weren't they? A. Quite similar anyway, yes.

Q. And that was true in the Rix structure, the forces on the shank were in a direction opposite to the face of the plate member engaged by the shank? A. Well, these situations are all true at one time. But at another time in the course of operation the forces could be and probably would be just the reverse of what you are talking about.

Q. You are talking about rebound forces now? A. Yes.

Q. But we are talking about the forces supplied as you are plowing and the rearward pull on the shank as in 811? A. In just normal, easy plowing, shall we say, that is true, [766] but as I say, in the course of the type of operation that is expected in such plows that is the basis for putting a spring clamp on such a device, under those circumstances then there comes a time when the forces are just reversed from what you are suggesting.

Q. Of course these other structures of Petersen, Jeoffroy, Rix, and we can actually include Cobb in that, can't we? Now I show you the Cobb on Defendants' Exhibit 11. We can say the same thing about the forces of Cobb as we have mentioned on these others? A. Yes, at

one time they are in one direction and at another time they are in another direction.

Q. And in each of them they would have the pulling force in the plowing that would be applied in one direction, the rebound would be in the opposite direction? A. That is correct.

Q. And whichever force we are considering, the forces—the direction of these forces is in the same direction relative to the engagement of the shank and the plate in the rebound—in the regular pulling stress or forces, they are all in the same direction, then when you have your rebound they are all in the opposite direction and each one of them is exactly alike as far as those directions, aren't they? A. Well, I would hesitate to say exactly alike, sir. They [767] are quite similar in that respect.

Q. As far as direction of forces they are not exactly alike? A. I have some doubt they are precisely alike, but certainly in general that is correct.

Q. Now then, we will look at Glencoe. Glencoe also has the same direction of forces applied relative to the engaged faces of the shank and this hinged plate member, so that in the plowing the force is in a direction opposite from the plate, upwardly actually in the illustration you have, your rebound of course would be down, but that is the same relative direction we had in the Graham 811? A. Well, there again that is probably too broad a generalization. At the left-hand end of Glencoe in normal plowing the force would be up at the right-hand end of the shank as we see it there. I believe the force would be down, naturally would, it would never open the clamp.

Q. But the force at the rear of the hinged member, which I believe you understand we have been talking about, that force would be away from this face of the plate? A. At the rear.

Q. Yes, sir. A. It would be away from it at that particular point, not [768] at the point where you run your pencil, and that is why I took exception to it.

Q. And that is the same relative direction that you have in Graham 811, Petersen, Jeoffroy SC-580, Rix, and also Cobb? A. Yes, sir.

Q. Now, when we apply the Petersen device in this hinge member into the Graham 811 and keep the same relative direction of forces, our modification of the Graham 811 would again be the Glencoe except that we would have a set screw in this upper part of the loop instead of the bolt 32 that you have marked on the illustration of Glencoe? A. Well, if you in effect disregarded the teaching—what to me is the more basic teaching of Petersen, and simply used Glencoe, then that is the way it would come out.

Q. You followed me as far as the moving of the hinge member of Petersen into the Graham 811, did you not? A. Well, yes. If you put Petersen in so that you no longer have the hinge member between the shank and the fixed member as taught by Petersen, then what you are saying I believe would follow.

Q. If we keep the same relative direction of forces that would be applied in Petersen, then you would have your modified structure like Glencoe? [769] A. I think it would be just that way. But in so doing you depart, in my opinion, from the teaching of Petersen.

Q. In the Deere 100 series I have here, Defendants' Exhibit 27-A, your force on your shank in the plowing is upwardly at the rear of the clamp? A. Yes, sir.

Q. And that is in a direction relatively toward the face of the hinged member? In other words, it would be the same relative direction of forces as you would have in a structure looking like the Graham 798? A. Well, if you will move your pencil as you were pointing again back to the proper point, I will say yes.

Q. So we will actually be looking at a Graham 798, in other words, the forces at the rear of the hinge member on the Graham 798 have the same relative direction as to the shank and the hinge member as is present in this Deere 100 series clamp? A. At the rear end of the clamp.

Q. And we can say that that same relative direction is also present in the Deere 650 structure? A. At the rear end of the clamp, yes, sir.

Q. So the two accused structures then have the same relative directions of forces at the rear end of the clamp as in the Graham 798, yet each of these examples of your

prior art has an opposite relative direction [770] of forces? A. At that point, yes, sir, and under those conditions.

Q. I believe you said that in this Glencoe, while we would have an upward force on the shank at the rear of the hinge member, that in the forward portion of the shank, that part forward of the loop, that would have a downward force or toward the plate member? A. At the far end I think the force would be down and whether or not there would actually be any force tending to push the two together in between would depend a little on the structure.

Q. And in the Graham 811 structure, the force at the rear being upwardly along the part of the shank above the fulcrum plate, that part of the shank would have a force toward the face of the fulcrum plate? A. Well, at least the right-hand end of the shank, I believe, would have that force. That would be what would tend to compress the spring and open the clamp.

Q. And that would also be true of Petersen? A. Yes.

Q. And of Jeoffroy SC-580? A. Yes.

Q. And of Rix? A. That is correct.

Q. And we can also say it would be true of Cobb? [771] A. Yes.

Q. Now, when we consider these relative directions of forces, even Glencoe doesn't teach us that we should turn that plate and shank member over, does it? A. I don't think that Glencoe itself teaches that you should turn the shank member over at all, as such.

Q. You mentioned earlier about some model that you made or had made back in 1951 at the trial in the first Jeoffroy case, and you told us about ideas that you had at that time. Have you read the record as to a description of that model? A. Part of it.

Q. That model embodied some ideas you had in clamps, I believe you said, didn't you? A. Oh, I don't know whether I would put it quite that way. It was intended to demonstrate in court the operability, at least, of a structure when you made a fixed pivot for the hinged member and fastened the shank and the hinged member together to eliminate the so-called floating action of the 811 shank. That is as I recall it.

Q. I think that is correct, but I thought some of the other comments you have made about your ideas at that time were slightly different than this, so I think it might be desirable to put in the record what actually was said [772] about the description of that model.

Mr. Morris: Well now, I have no objection to putting the testimony in the record, but if you have in mind some impeachment of credibility here, some attempt to show that it is different, I want a predicate laid for what it is you say is different before it is offered on that basis. I object to it, if it is offered for the purpose of impeachment, as having no predicate laid.

Mr. Gold: We had some testimony that I think was indicating that he had suggested a clamp in a model back in 1951, that would lead him to some of the changes he has presented in Defendants' Exhibits 24 and 25, and I do not believe that the model described here is in accordance with some of his comments about it.

The Court: What are you going to ask him? About the model he describes in the prior case?

Mr. Gold: Yes, sir, I am going to ask him if this description is correct.

The Court: I think you should then read that testimony to him and ask him if he did testify thus in that case.

Mr. Morris: I certainly have no objection to it on that basis, Your Honor.

Q. (By Mr. Gold) This is a question at the bottom of the [773] page of 790, in Volume 2 of the printed record in the Jeoffroy Manufacturing, Inc., et al., versus William T. Graham and Graham Hoeme Plow Company, Inc., No. 14227.

Mr. Morris: Do you want to back up and get it in proper context and mention on 788 where he first described the changes which had been made?

Mr. Gold: I don't find what you have reference to.

Mr. Morris: Bottom of page 788, the last paragraph. If you will read it you will see he described the two changes he made just as he described them yesterday.

Q. (By Mr. Gold) In view of that we will start with the answer you gave at the bottom of page 788:

"ANSWER: In this device, I have changed it from the original form in two ways: I have fastened the bar representing the shank to the fulcrum plate; and in addition to that I have put a plate over the bottom of the—, I have fastened the shank to the fulcrum plate, and I have put a plate over the bottom so that we have a closed bearing instead of an open bearing where the fulcrum plate rides upon the pivot pin 62. By fastening the shank to the fulcrum plate I have eliminated any possible longitudinal movement of the shank with respect [774] to the fulcrum plate. And by putting a cap over the bottom in, in effect, a bearing cap, I have assured ourselves that the fulcruming will be about the fulcrum pin 62, as described in the patent.

"Your Honor will note that by applying force to the bar representing the shank that I get substantially the same type of pumping action as I get if anything a little smoother, a little bit more resilient pumping than I was able to get before; but as far as the pumping action and the movement of the shank, they are substantially identical."

Is that a complete description of that clamp, the model you had back in 1951? A. That is my recollection of it. I of course can't remember specifically if that was exactly in accord with my testimony, but I have no doubt of it.

Q. That is your testimony? Do you recall that that would be your testimony at that time? A. Well, that is my recollection of what was done to the model, and it is my recollection of what I said here about it yesterday, or the day before perhaps.

The Court: We won't pin you down on the days.

Mr. Gold: I believe that will give the same description I was going to read on the other page.

Q. (By Mr. Gold) Now, Mr. Fishleigh, with this Graham 798 device before you, it was rather simple to make the [775] changes in the various devices that you have proposed in Defendants' Exhibits 24 and 25, wasn't it? A. Well, that approach would have been true because a glance at this prior art shows that all of the features of the 798 are present and taught in the prior art and all that it amounts to is a little shifting around of some of those features.

Q. And you had the Graham 798 patent before you when you made these charts? A. I didn't have it before me. I knew about it when these charts were prepared in detail.

Q. You had studied it and were quite familiar with it at that time? A. Reasonably so, yes, sir.

Q. I believe you stated that the Graham 798 device would give the same plowing job as was obtained by the prior art. Now, did you mean by the prior art the same as the 811 and the Jeoffroy SC-580? A. Well, I think I was talking, that is, in general terms as to what one could tell in looking at it in the field or even watching it from a distance, and I would include, I believe, those two with it, that you got substantially the same type of action as far as you could see in the field.

Q. Of course you have already testified that you have never [776] seen Dunbar and Rix and Cobb and those operating in the field, haven't you? A. That is correct.

Q. Now, in this 811 structure— A. Might I say I should add perhaps to that list, and Glencoe.

Q. That you have not seen? A. No. To those that operate—as far as over-all final result is concerned, I don't think you could tell, by looking at a field or even watching the plow if certain parts were covered up so you couldn't actually see the clamps, which one was operating.

Q. Now, I believe you have seen the 811 structure in operation, haven't you? A. Yes, sir.

Q. And when you saw that in operation, particularly as you began to turn on a slight curve with the plow, there was a tendency for the shank to lay over or lean, wasn't there? A. My recollection of it is, and I believe I said the other day that I had noticed more sidewise movement in the 811 than in any of these others.

Q. In the 811 and in the Jeoffroy SC-580? A. Well, my recollection—it is some little time since I saw a Jeoffroy 580 in operation. My recollection is [777] that there was less of that in the Jeoffroy than there was in the Graham, but I am not positive of that.

Q. You do recall that in some cases they laid over rather extremely, don't you—particularly the 811? A.

Well, I don't recall it at the moment but I couldn't say but what perhaps that was true. I don't recall under some extreme condidtion that that was true. I have no reason to doubt it, however.

Q. Now, when I say laid over, in effect that would be lateral movement so that looking toward the direction of travel the back part of the shank would lean at an angle to the vertical, is that right? A. Yes, if I understand what you are suggesting, that the shank portion in the clamp could twist.

Q. Now, did you find that same tendency to lay over in the Deere 650 and 100 series? A. No, not in that extent.

Q. You have a reproduction of the Claim 1 on the top sheet or on a sheet that is stapled to Defendant's Exhibit 25, and Claim 2 of the Graham 798 is on the actual sheet, so that the Claim 1 overlies Claim 2, is that right? A. Yes.

Q. And in both instances you have "Yes" after each of the elements of the claims and those refer to a modified [778] form that you have in the lower right-hand corner of Defendants' Exhibit 25? A. They do refer to the structure as shown in my pictures in the lower right-hand side.

Q. In other words, it has the same relative arrangement as the reproductions of Claims 1 and 2 with your answers as to the elements that you had in Defendants' Exhibit 24? A. Yes.

Q. Mr. Fishleigh, we have placed the chart Defendants' Exhibit 28 on the easel. You have reproduced on that structure—on that chart Claim 1 of the 798 patent, that is, it is near the center of the chart, is that right? A. Yes.

Q. And you have lines drawn from the elements of that claim to parts of illustrations of the drawings of the Graham 798 patent to the left of the chart and that has some on a fly part that overlies some other drawings? A. That is correct.

Q. You have a part showing the Deere 100 series that is stapled to the main sheet of the chart and under that

you have an illustration of the Deere 650 series, is that right? A. Yes.

[779] Q. Now, I notice that you have a column headed, "Is element found in Defendant's structure?" And in reference to that column on the fly part it shows the defendants' structure 100 series, and you have placed "Yes" for the introductory part of Claim 1 and the part you have numbered 1 you have also marked "Yes." That means that you have found that those elements do find a response in the defendants' structure, 100 series, is that right? A. Yes.

Q. Now, you will have in your element that is marked 2-A "No," is that right? A. Yes, that is what I have. I have a "No."

Q. That element calls for a fixed member, it is adapted to be fixed to a transverse member of the frame. The Deere 100 series has a part that you have marked yellow and it is adapted to be fixed to a box frame, isn't that right? A. That is correct.

Q. The element of the claim then continues that this fixed member has "a longitudinally extending underface terminating forwardly of the transverse member to which said mounting is adapted to be fixed." Now then, I believe that we have already stated in connection with the Graham 798 structure that that underface formed a [780] stop face so that when the spring urged the shank and plate member upwardly that would define what you called a home base position, is that right? A. Yes. I picked up the phrase home base position; would provide a stop to position it in normal plowing position.

Q. Now, in the Deere 100 series you have a hinge member that is colored dark green that you have numbered with a small numeral 8, is that right? A. That is correct.

Q. And the spring force is applied in such a manner that that member and the shank are urged upwardly so that there is an engagement of some faces that would tend to hold the shank in its home base or normal position? A. Yes, some faces.

Q. In this case you have a base on the dark green or hinged member that engages an underface of a beam, do you not? A. Yes, a relatively short face on the hinged

member, which does engage one side of the lower face of the beam.

Q. And as far as those two faces that are engaged in normal position, they are corresponding? A. I am not sure that I quite understand what you mean.

Q. In the Deere 100 series the part that is engaged between this hinge member and this beam (indicating), there are corresponding faces on the hinge member and beam? [781] A. Well, I wouldn't quite put it that way, but that is of course a part of the face on the beam which is engaged. That portion of it does correspond in outline with that portion of the face on the hinged member. Actually if two things come together they contact on comparable areas in both members.

Q. Then your answer to my question is yes? A. I don't think it is yes, because the faces, considering the complete faces, are not corresponding.

Q. I believe my question was the engaged faces, Mr. Fishleigh. A. Well, even then a portion of the face which is engaged.

Q. Now then, also in Element 2 there are "Ears extending rearwardly from said underface at the sides thereof." There are ears on the Deere 100 series fixed member and it does extend rearwardly, does it not? A. Well, I haven't made a point in that, but they are the actual ears in the same sense as over in Graham, but there are extensions through the fixed member through which the pivot pin passes and I would make no complaint about it.

Q. You wouldn't want to call these parts that, call the pivot pin in the Deere 100 series ears? A. Well, I say I have not questioned it although there is [782] some degree of difference on it.

Q. There are the plate that extends upwardly at the rear of the bend and there are parts of that casting that extend rearwardly from that plate, aren't there? A. That is correct.

Q. And that wouldn't be called an ear? A. Well, as I say. it isn't in the same sense, in my way of thinking, but I have called it an ear and let it go at that.

Q. Its function is to have a hole in it to mount a pivot pin, isn't it? A. That is correct.

Q. And that is the function of the ears on the fixed member in Graham, merely to provide a place for a pin for pivoting this hinge member? A. Yes, I think that is true.

Q. And of course in Graham they wanted that pin above the shank and the pins above the shank in the Deere structure? A. It is above in both instances. I don't know what they wanted. That is what they show in Graham.

Q. So we have in this element 2 in Graham a face on the fixed member on the under side, in other words, that would be facing downwardly, wouldn't it? A. Yes, an underface.

[783] Q. And we have ears on the fixed member that mounts the pivot pin? A. That is correct.

Q. And in Deere we have a fixed member on a beam, but we have a downwardly facing face on this beam, and we have ears that are to the rear and above the shank on that fixed member to mount a pivot pin, is that right? A. Yes.

Q. If we moved or threw a bit of metal on the upper part of the forward end of the hinged member in the Deere 100 series, so that it would be sufficient to engage the flange on which the spring is seated, so that those would engage and could be moved, this little bit of metal that engages the beam, would that change the operation of that clamp structure? A. I don't believe it would.

Q. It would operate exactly the same way? A. Substantially the same, yes, sir.

Q. And your reason for putting "No" in this exhibit as to the element 2 is because the engagement of the hinge member is with the underface of the beam and not with an underface of the fixed member, is that right? A. Well, at that particular point my reason is that on the fixed member there is no longitudinally extending underface in the sense of the Graham patent. It is [784] true that later on it is pointed out that that underface is supposed to engage something else, but that does not find a response in my opinion in the sense that it is in the Graham patent.

Q. Now of course if we are going to talk about a longitudinal extending underface, merely take this element

here, the fixed member has an underface under this flange on which the spring seats, doesn't it? A. Well, there is a face there of sorts. I don't believe that we could say that that is comparable to the face in Graham, and certainly as carried forward later on for its functioning it doesn't fit in the picture.

Q. Then you went ahead with the other elements of the claim and how they would function in considering whether or not you found a response for element 2? A. No, more particularly I went to the file wrapper and saw how that was described in the file wrapper at the time that this claim was put in and the basis on which it was said to introduce novelty into the claim, and I don't find that in this 100 structure.

Q. Then you were considering the function of the underface? A. Structure and function.

Q. If you were considering only what is specified in the claim and whether or not you could find the response to that element 2, you would have to say that if you didn't [785] consider the function that you would find an underface, wouldn't you? A. Well, if I were just reading that language as English language out of the dictionary I might find something that it could be in a broad sense applied to. But in the sense of this patent I don't find anything on the fixed member of the 100 series to which it can properly be applied.

Q. If we read the element alone, without considering function, we find a response in this particular part? A. Well, I don't read an element alone as English without considering its function in the structure to which—

Q. You also consider the function? A. Both the function and the structure.

Q. The function can be very important, can't it? A. It can be, certainly.

Q. And in this case you didn't find the same structure but you did find some parts that would serve that same function, didn't you? A. I found a different part on a different part which performed that same—in general terms, that same function.

Q. On the stop? A. Yes.

Q. So if we were considering the function we would have to change that "No" to "Yes", wouldn't we, as far as the [786] action that we have in the Deere structure and the action that we have in the Graham 798? A. Well, no. If that element read merely "Some stop means," then perhaps we would say yes, but as it is set forth there, considering the function and the structure, the answer is no, and of course that is particularly true when distinction was made from other stop means in the prior art.

Q. You mean a sliding type of stop means? A. No. A stopping type of stop means.

Q. I find you also have in the element No. 3, "A shank attaching member" and you have "No" there. If we take just that portion of the element, there is a shank attaching member in Graham and there is also a shank attaching member or hinge member in Deere, isn't there? A. Oh, yes, and in all the prior art that we talked about.

Q. We have in this particular case an elongated plate portion and Deere has an elongated plate portion on their shank attaching member, do they not? A. Oh, I think I would say yes.

Q. And it has an upper face, too, doesn't it? A. Yes.

Q. And that upper face corresponds with and normally is in contact with an underface that is in that device designed to be engaged by, right here where your number [787] 25 is on the illustration of the 100 series, is that right? A. Yes, a portion of that upper face of the hinged member is in contact with a portion of the lower face of the frame member.

Q. And element 3 continues, "A longitudinally extending underface." The Deere structure has a longitudinally extending underface, doesn't it, on the shank attaching member? A. Well, may I ask did you intend to skip the actual working of part of it there?

Q. I am not reading the element exactly, I am asking you about the response of the various parts of it. A. All right.

Q. And the shank attaching member of the Deere 100 series has a longitudinally extending underface? A. Yes.

Q. And it is in engagement with a corresponding upper face of the shank, this part you have colored pink, I be-

lieve, is engaged with the underface of the shank attaching member, is it not? A. Yes, sir.

Q. And the hinged member or shank attaching member in the Deere 100 series is between the shank and the fixed member, is it not? [788] A. Yes.

Q. Now of course we don't have any question about the means that connects this plate portion with the shank, that is this bolt, isn't it? A. It is the bolt and the portion of the strap member at the rear of the hinged member.

Q. You feel that both of them are necessary? A. Yes.

Q. You didn't have to have anything in the rear of the 650 series as shown on this same chart to have a light-colored green on it to respond to such a means, did you? A. No, because on that we said there was no such response.

Q. Then this particular part, this plate member, isn't essential to the operation of the 100 series is it? A. To the operation of it?

Q. Yes. A. Well, no, it operates without such a means.

Q. But regardless of how we interpret Claim 1, as far as element 4, we do find that there is a response in the Deere 100 series? A. Oh, I wouldn't go that far. I could imagine you interpreting it in many ways which wouldn't find a response. But when it is interpreted in a proper way, I believe there is a response to that piece in the 100 series.

[789] Q. Now, we also have another element, a transverse pin that you have marked element 5, and it pivotally connects the shank attaching member to the fixed member, does it not? A. Yes.

Q. In the Graham structure? A. Yes.

Q. And here is Exhibit 10 that you have colored blue in Deere to pivotally attach that shank connecting member to the fixed member? A. Yes.

Q. And in the Deere structure that pin is in such a manner that it is rearwardly of the contacting faces that form the stop, is it not? A. It is rearwardly of those faces which form the stop.

That is correct.

Q. It is rearwardly and upwardly, isn't it? A. Yes, somewhat.

Q. And the shank attaching member pivots upon the rocking movement of the shank in the Deere structure? A. Yes.

Q. So your marking that particular part "No" was because there was no fixed member right in front of the hinge pin that had a face that would contact the shank attaching member, is that right? [790] A. Well, possibly. Actually it was because, although the transverse pin is rearwardly of a couple of contacting faces which provide stop members, it was not at the rear ends of said normally contacting faces as described in the preceding elements of this claim.

Q. Of course if you wanted to put a little bit of metal under this fixed member—under the beam, on one-half of the fixed member so it would be right above this shank attaching member, you would have such faces and there would be no change in operation, would there? A. No, you wouldn't have such faces so long as you left it on the beam. You could change it very readily and come back to—

Q. You misunderstood my question, Mr. Fishleigh. I don't want you to misunderstand. I said if I took some metal and put on one-half of the fixed member so that that metal would extend under the beam and be above the shank attaching member so those faces would engage, then you would have contacting faces, yet the operation of the device would not be changed one iota, would it? A. Well, if you changed it over so that the upper longitudinal face of the hinged member did correspond with and contact an underface and a fixed member, then of course you would back up and would have a response to certain points. Now, in my opinion there would be no basic [791] change. I would hesitate to say to you that this wouldn't be changed one iota, but no substantial nor basic change in the operation.

Q. Will you tell me any change that would occur in the operation. A. Well, if that was all you did there you might tip it down, but as the thing is organized there,

without doing anything more than you suggested I don't just see how you could get an operable structure without changing the adjustment of the plow. But perhaps you contemplate making other adjustments so that you would have something comparable to the 798.

Q. We have what appears to be a space—actually it looks like it is yellow on this chart, between the bottom of the beam and the upper face of the hinge member, and that is all the metal we put into it, showing that space would we change the operation? A. I suppose if you attempted to do that, no more than that, you would probably end up with an inoperable structure, if you attempted to put in such a face as that of this cast fixed member.

* * *

[792] The Court: Gentlemen, I think we might take a 5-minute recess.

(Recess.)

Q. (By Mr. Gold) Mr. Fishleigh, there is no question that the Deere 100 series has coil springs and therefore we can read element 6 of the Claim 1 on that device, can't we? A. That is correct.

Q. Now, in element 7 we have "Means having connection with the forward end of the shank and with the other end of the coil spring." We have a spring bolt in the [793] Deere 100 series and it does have a connection with the forward end of the plate member, doesn't it? A. Yes.

Q. And that spring urges the plate member upwardly so as to maintain a normal contact with the upper portion of the plate portion with the stop face designed into that structure in the fixed elements of the device? Is that right? A. Yes.

Q. And the purpose of that is to maintain the normal plowing depth of the groundworking tool? A. Yes.

Q. So we have a structure here that does provide the function as provided in the element 7 of Claim 1? A. Well, the ultimate result, yes, of maintaining the normal plowing depth of groundworking tool. That much of it in the structure device.

Q. In your notes you have stated that there is no means in Defendants' 100 series structure which is directly con-

nected to the forward end of the shank, isn't that right? Isn't that your note? A. Well, I think so, if you read it correctly. This is right.

Q. The word "directly" was put in by you. You didn't find "directly" in element 7 of Claim 1, did you?[794] A. It isn't spelled out there, but that is what is shown in the 798 patent.

Q. When we are considering the scope of this means that would perform this function, we do have a spring bolt in the Deere 100 series that is connected to the forward end of the hinge member, which in turn is connected by a bolt to the shank member, so there is a connection really between the shank member and through the hinge bolt—I am sorry, through the spring bolt to the upper end of the spring? A. Indirectly through the hinged member.

Q. This element 7 doesn't say whether that connection is directly or indirectly, does it? A. It doesn't spell it out in that language. In a case of that kind I look to the patent and the specification to see—certainly in the sense of the 798 patent that is certainly not a literal response.

Q. I believe you said that this element was merely a single means element? Did you say something like that on your direct testimony? A. I don't know that I said anything about a single means element. It is what I call a means clause, in other words, specifying means for doing such and such.

Q. With the function? I think you added that also? A. Yes.

[795] Q. I believe you stated that it had no structure specified in that element. A. Well, I don't know whether I said that or not. I think at least as far as the thing being described, I think there is no specific structure. It does refer to other structures that it has connection with.

Q. The connection could be a structure then, couldn't it, so we can't say that this means clause has no structure in it? A. As far as the means being described, it is not spelled out in any structural definition.

Q. The means by itself, but it is spelled out that it does have a connection with the forward end of the

shank and with the other end of the coil spring? A. Oh, yes. It refers back to structure previously mentioned in the elements of the claim.

Q. Then you don't consider the word connection has any significance as to structure? A. Oh, I wouldn't say that I didn't think it had any significance, but it doesn't describe any particular structure.

Q. Then we do have, through the connection of the spring bolt and the hinge member and this bolt that you colored light green, we have a connection from the upper end of the spring to the shank to provide the function [796] of maintaining the hinge member or shank attaching member and the shank in their normal position? A. Yes, there is that indirect connection as between parts other than specified in the—the connection between parts other than specified in the claim which does result in that structure being held in normal plowing depth of the groundworking tool.

Q. Of course you have shown on the Glencoe structure over here at the side and made some comments in a note that if we ignore certain features of the Graham 798 device of Claim 1 that you would have the elements in the Glencoe structure to correspond? A. I think that is so.

Q. In that note you disregarded relative positioning of the parts? A. Yes.

Q. And you also disregarded the direction of forces applied to the shank relative to the plate member? A. Well, yes, because there is nothing set forth about that.

Q. We have already brought out that in the structures, the direction of forces in the Deere 100 series and the 798 series are the same, but they are opposite from the Glencoe structure? A. That is right, at certain points and at specific steps [797] of the operation.

Q. You have, in applying your "Noes" to the various parts of the claim as shown relative to the 100 series, taken a very narrow view of any scope of the elements of those claims, haven't you? A. Well, I have taken as broad a view of the scope as I felt was justified in the light of the progress through the Patent Office, the file wrapper

and the specification and drawings and the general state of the art, and in some instances, particularly the longitudinal face business of the stop face, I was guided by the fact that in the course of the prosecution certain things were pointed out clearly as not being what was described there, so that a least had set a point of departure for me.

Q. In your notes you have not brought out the parts of Deere that would cooperate to provide the same function as would be provided by the 798 elements of the claim, have you? A. No. In some instances I think I have said there is a part that does certain things, I believe I have, but differs in certain respects.

Q. In details? A. Well, details in one sense, and looking at it from the standpoint of the parts which carried the claim through [798] the Patent Office I would say they are tremendous mountains.

Q. As far as the actual operation of the structure of Deere 100 series they would be minor details, wouldn't they? A. Oh, important details, I would say.

Q. Important? A. Yes.

Q. Of course one thing we ought to do is to remove this little bit of material on the upper part of the shank attaching member that contacts the beam and put it up on the front of the shank attaching member so it will contact the underface of the part of the fixed member on which the spring seats, then we would have an underface of the fixed member, we would have an upper face of the shank attaching member that were contacting, wouldn't we? A. We would have a portion of the face if we did make that change.

Q. And they would form the stop? A. That is right.

Q. And the operation and function of the Deere 100 series would still be the same as if provided with the structure that is here in issue? A. At least quite similar, yes.

[799] Q. Now, we have turned the fly part over so we have the illustration of the 650 series of the Deere structures, and now we are going to look at the "Yeses" and "Noes" that are on the main sheet of the exhibit, aren't we, in reference to the 650? A. Well, I don't know what you are going to do.

Q. That is, where you have the yeses and noes as to the 650 series? A. That is correct.

Q. And in this Claim 1 relative to the 650 series in both the introduction and the element marked 1 you have provided "Yes", that you do find a response, haven't you? A. Yes.

Q. Now, in the fixed member in element 2 you have provided a "No". Now, in reading that element it specifies a fixed member and Deere does have a fixed member that you have colored yellow, doesn't it? A. Certainly.

Q. It is adapted to be fixed to a transverse member of a frame, isn't it? A. Yes.

Q. And does that fixed member have a longitudinally extending underface? A. Not in the sense of the Graham patent and for the [800] purpose there set forth.

Q. It does have an underface that I am pointing to with my pencil that is above the heads of the bolts that hold the parts to the fixed member? A. That is correct.

Q. It also has an underface on the bottom of this lug that you have designated with the numeral 44 at the forward end of this structure, doesn't it? A. Yes, it has a small bottom to the lug.

Q. So then we should say that the 650 series does have an underface, doesn't it? A. No.

Q. This also specifies that this underface terminates forwardly of the transverse member to which said mounting is fixed. This underface on the lug 44 in the 650 series is forwardly of the transverse member? That would be the square beam, wouldn't it? A. That is correct.

Q. And of course the forward end of that face would be terminating forwardly of the transverse member? A. Well, the whole thing is forwardly of it. That whole lug is forwardly.

Q. So it naturally follows that the forward edge of it would be terminating forward of the other transverse member, that is obvious, isn't it? [801] A. I certainly wouldn't understand that that is applicable language in a case of that kind.

Q. You would have difficulty in applying that particular description to that face of the lug? A. Yes, although

the facts are clear enough. The lug is forward of the transverse member of the frame as the plow operates.

Q. You know, if the Graham 798 structure in the embodiment illustrated in the drawings were to have some additional metal that would be added upwardly from the rear part of what you colored yellow and come up to the top plate over the H-beam so as to form a housing-like structure, would that change the operation or the purpose of that structure at all? A. I don't think so.

Q. We have already determined that these ears are merely to mount the pivot pin, aren't they, on the 798 structure? A. Yes, that is the purpose of them.

Q. And merely adding some more metal in there might add a little bit more strength, that would be about all it would do, wouldn't it? A. Well, functionally that might be, but it might change any description of the matter.

Q. Now, of course in the Deere structure we have some metal added above the boss to which the pivot pin [802] extends, haven't we? A. Well, we have to have a part there. We don't particularly have it added there. That is the construction of it.

Q. That would give some strength around this part that mounts the pivot pin, wouldn't it? A. That is correct, and also provide other functions.

Q. Of course this boss that we have here on the Deere 650 series is toward the rear of the fixed part, isn't it? A. That is correct.

Q. But the fact that we have made more metal to box that in instead of having it—this other part cut out, then you say we don't have any ears in the Deere structure, is that right? A. I think that is a fair statement of it.

Q. So therefore that is the reason why you put "No" after the element No. 2? A. Oh, that was only, as I say, a minor portion of it. It is there as a statement of the difference, the basic difference was on the matter of the longitudinal faces which are not there in the sense of the Graham structure.

Q. Of course in both cases the ears are an integral part of the casting that we have called the fixed member in the Graham 798, aren't they? A. Well, the ears are and the

support for the pivot pin is an integral part of the structure.

[803] Q. And we have bosses on the 650 series that are an integral part of the lower half of the 650 series, do we not? A. That is right.

Q. As far as the function of mounting the pivot pin, the Deere 650 series provides that same function that would be equal to the function of the mounting of the pivot pins in the 798 structure? A. Well, mounts the pivot pin, yes.

Q. You wouldn't want to say it would be equal as far as function? A. Oh, in that sense, as far as whether it is better or worse from other points of view, but certainly they both support the pivot pin satisfactorily.

Q. So in the Deere 650 series we do have a fixed member, it does have an underface, and the underface is forwardly of the transverse member, and it has pivot pin mountings which serve the same function as ears, whether you call them bosses or ears wouldn't make much difference, so we should change that "No" to "Yes" here on element 2, shouldn't we? A. No.

Q. To be fair about it? A. No, we would be most unfair if we did, because even in your statement of it you omit some of the more important [804] and critical parts and of course we never should look at language entirely aside from—divorced from the specification and file wrapper, and for that matter, prior art of a patent.

Q. What parts did I leave out that you are particularly concerned about? A. Oh, you just said an underface, left out the "longitudinally extending," for example, and left out the—whether or not that part that you are pointing to in any way is similar to the underface that is considered or referred to in Graham, and whether it would be even adaptable for the same function.

Q. Now, let's take the word longitudinal. If we consider the surface at the lower part of the lug marked 44, from the front edge of that lug to the rear edge, that would be longitudinal of the shank, wouldn't it? A. Oh, certainly.

Q. And that would be in the same direction as is referred to as longitudinal in describing the underface of

the fixed member of Graham, wouldn't it? A. That is correct.

Q. So we do have a longitudinally extending underface in the Deere 650 series? A. No, not in this sense. You have a part which has a little length that way, but if you are going to talk [805] about that face at all, or describe it, it would be transversely extending.

Q. It would also extend longitudinally though, wouldn't it? It would extend both directions? A. Any surface has two dimensions, but certainly if you are talking about a surface and a direction it extends, you don't talk about its shortest dimension and disregard its longest dimension. In the sense of what that means and as it was pointed out how far it is, I wouldn't say that that came under it at all.

Q. In your answers, Mr. Fishleigh, very, very frequently you have mentioned about something in the description of an element of the claim as being in the sense of the Graham 798 structure. When we talked about this underface you again mentioned it. But when we consider the sense of the Graham 798 structure we should consider the purpose of it, shouldn't we? The purpose is the sense of it, isn't it? A. Well, that is only half of the story. That is, if this Graham 798 stood out as a milestone by itself, then perhaps what you are saying is true and it might be entitled to a broad range of equivalents, but when, as we see here, the difference between what was not patentable and that which became patentable is restricted almost entirely or primarily to certain [806] specific things, then you can't disregard them and talk purely of function, because for things to be equivalent it is not, as I understand it, just mechanical equivalents, it is not at all enough that they perform the same function or the same job.

Q. They should perform it in substantially the same way, shouldn't they? A. And they should be similar structures, and the range of that depends—

Q. Of course now you are getting into a legal opinion here, aren't you? A. Well, I have been taught that the question of equivalence, it is true, it is set forth by the Court, but it is said that it is a question of fact to be determined, amongst other ways, by expert opinion.

Q. Now then, let's consider the face that we have on the Deere 650 series on the lower end of the lug, and its purpose. It is a stop face, isn't it? A. That is correct.

Q. And the face on the fixed member, this lower face we have been talking about in the Graham 798 structure, is a stop face? A. That is correct.

Q. Both to perform a function in connection with letting something engage it to hold the tool in a normal position? [807] A. That is correct.

Q. And when we actually consider the words in element 2 without going into the so-called sense of the Graham patent which you have been referring to, we do then find that there are a number of faces that can be called longitudinally extending underface in the Deere 650 structure, don't we? A. Oh, I think if you take the language of that element and look up word for word in some dictionary or even the best dictionaries, that you could perhaps—that is, if someone described or could describe the 650 series and refer to some surface and describe it that way, I think that perhaps is true, considering it not as an element of a claim in a patent, but as mere verbiage, I think you probably could find several such places that you could find a—could describe it.

Q. Of course we should look at the teachings of the Graham 798 patent with the same broad scope that we should look at the teachings of the prior art, shouldn't we? A. Well, if I am thinking of it as to what it might teach me, but if I am thinking of it as to what portion of that teaching belongs to Mr. Graham rightfully, then it is a vastly different subject.

Q. Then you want to narrow it down to detail of a specific [808] illustration of the embodiment? A. No, to what advantage, if any, Mr. Graham made over the prior art.

Q. Now then, we do of course have a shank attaching member in the Deere 650 series, do we not? A. Yes.

Q. And it has an elongated plate portion? A. I think that is correct.

Q. And it has an upper face? A. Yes.

Q. And it also has a longitudinally extending underface? A. Yes.

Q. And the underface is in engagement with the corresponding upper face of the shank? A. Yes.

Q. And the plate portion is between the shank and the fixed member? A. That is correct.

Q. Now if we would extend this plate portion out to the forward end of the shank and then cut your lug 44 off so it would engage the upper face of the plate portion we would not have changed the operation of the Deere 650 series device, would we? A. Oh, you would have changed the detail but it would still undoubtedly plow satisfactorily. [809] Q. It would just be moving the face of the stop here, be the reverse of what Deere did, I imagine, merely cut off this face and extend the lug down so as to have engagement to perform the stop against that shank, would that be about right? A. Well, I don't know that I know or knew at any time. I certainly don't recall that Deere did that.

Q. But with either structure the operation would be the same, the same results, same manner of plowing? You wouldn't have changed the operation of this device at all, would you? A. Not materially, no, sir.

Q. And that is the reason that you have marked "No" on element 3 is because this lug has been extended down and the face cut off, instead of having the plate member extend out and the lug engage the top of the plate member? A. Well, my reason for saying no is because there is not in the Deere structure any parts which provide that —that respond to it.

Q. If we made this minor change of extending this plate portion forward and had the lug engage the top of the plate portion, then we would have to change that "No" to "Yes"? A. Oh, no. No, because in the first place I have never [810] agreed with you that the bottom face of that lug could be said to be a proper response to element 2 or to part of element 2, and likewise if you did have it contact the rear end of the hinged member, that that would have a face—that that shank attaching member would then have an upper face corresponding with and normally in contact with said underface, that regardless of that it would not be the same.

Q. Because this face then under the lug 44 wouldn't be running throughout the length of the plate member? A. Well, yes, it would be a longitudinally extending face in the sense of Graham, it would be even smaller than the face which was—pair of faces which were distinguished in the file wrapper, in which they clearly said, This isn't what we have got.

Q. Do I understand your testimony that in the sense of the Graham patent, that the longitudinally extending underface would have to be the extent of this red line that you have shown on Fig. 2 of the Graham drawings on Defendants' Exhibit 28? A. That is what it is in the Graham structure. In another structure I don't believe that it would have to be precisely that, but it would have to be such that it was in fact a longitudinally extending face and somewhere between that and the situation which was distinguished [811] from in the prior art.

Q. Then we can shorten up this red part in the Graham when we read it onto some other structure then? As far as getting response in these elements of the claims, the underface can be much shorter? A. Can be some shorter, certainly. I think there comes a limit to it and I am quite certain that this structure shown in this 650 series is beyond that limit.

Q. If we would shorten it up one half of what is shown on Graham would that be all right? A. Oh, I think somewhere in that neighborhood would be—

Q. If we shorten it up to one-fourth of the length would that be all right? A. I am not prepared to say just where. I think you are getting very close to it. I think it is a very nebulous distinction, but nevertheless that was the distinction made over the prior art and certainly when you get down to the length of the stop members, as they existed in the prior art and are distinguished from, then that certainly is the limit and that is somewhere in the neighborhood of a quarter, I would say, of this, somewhere between a quarter and the full length would probably be all right.

Q. It is your position then that the distinguishing feature of the Graham 798 patent that made it allowable [812] in these claims was this longitudinally extending

under face? A. Well, that was the most emphasized and most repeated item.

Q. It was mentioned, of course, in the argument with the examiner, but was that the distinguishing feature? A. Well, as I recall it, that was very much emphasized both in the mechanical elements of the claim and in the argument.

Q. But you are not in a position to say whether or not that was the distinguishing feature? A. I think that was the primary distinguishing feature.

Q. There could have been a number of distinguishing features between the claims and the prior art then? A. Oh, there could have been some other feature. That was the one which was emphasized.

Q. Now, we do have an arrangement here in Deere 650 that does perform the stop so as to hold the shank in its normal position in response to the urging of this claim, don't we? A. Yes.

Q. And we do have contacting faces that form that stop? A. Yes, on the shank and on the bottom of the lug, small faces.

Q. Now let's take element 4 and read it and compare the [813] words with the structure in the Deere 650 series. "Means connecting the elongated plate portion with the shank for maintaining the upper face of the shank in constant continuous contact with the underface of said plate portion of the shank attaching member." We do have a bolt that you have colored green in the Deere structure, do we not? A. Yes.

Q. And it does maintain the shank in contact with the plate? A. Not throughout and not through all working conditions.

Q. Well, we have to have this member back here, No. 7, on the fixed member to support the shank in the Deere structure? A. Well, that does not maintain it in constant continuous contact, that simply prevents it from moving too far away so as to cause a rupture.

Q. Then it is your position that in the Deere structure there is a space between the shank and the hinged member, we will say, back towards the rear part of it ? A. At certain times, yes.

Q. And therefore the bolt doesn't hold the shank up in contact with that plate surface? A. That is right, not in constant continuous contact.

Q. Does the element of the claim give any extent of that [814] contacting surface? A. Well, it says that the upper face of the shank and the bottom face of the hinged member are in contact. That certainly to me implies throughout their length.

Q. That implies that to you but— A. And that is what is shown, of course, in the drawings.

Q. You mean in the Graham 798 drawing? A. That is right.

Q. However, in any quantity manufacture I believe that you indicated that you at least would make the hinge member of Graham out of a casting? A. I think I indicated that I personally would disregard the teaching of the Graham patent. But if one wanted to follow a teaching of that sort you adapt the tolerances to fit the teaching, not adapt any old tolerances and let it depart therefrom. Now, to accomplish what is suggested there I believe you would need rather close tolerances.

Q. You would have to machine the hole through the loop part or stirrup part of that shank attaching member then? A. I think you very well might.

Q. The specification in the Graham 798 structure doesn't say it is machined, does it? A. No.

[815] Q. Of course we have a surface on the fixed member that engages the bottom surface of an H-beam in the illustration and it shows contacts all the way across, doesn't it? A. Yes.

Q. So I assume that by your interpretation we would have to machine that surface also to have contact? A. No, not if there is no special reference to it. But here there is definitely a reference and it is shown as the same type of contact from end to end.

Q. Of course this is shown here too (indicating) and it has contact? A. That is right, but there is nothing in the specification nor in the elements of the claim that refer to having a constant continuous contact between those surfaces. If it did and is shown that way then cer-

tainly I would expect it to follow that that contact would be co-extensive with the extent of the surface.

Q. And of course you would assume that we would have to have the underface of the fixed member also machined, wouldn't we, in the Graham 798 structure? A. Well, not necessarily.

Q. You wouldn't machine it then? A. It might very well be sufficiently smooth for the purpose. There again it doesn't specify and there is [816] rather precise and extreme language that we have in the other situation where you call for constant continuous contact.

Q. And of course the bolt at the forward end of the Deere 650 structure does maintain a constant continuous contact with the forward portion of the shank and the plate member? A. At the part right under the bolt, yes.

Q. So we do have constant continuous contact, as you would put it, of a portion of those surfaces? A. At a small portion, yes.

Q. So it is due to your particular very limited interpretation of the words "the upper face" and "the underface" that causes you to put a "No" for the fourth element of Claim 1, referring to the Deere 650 series? A. Well, I wouldn't put it that way myself. I don't think it is mine. I think it is simply the definition and interpretation of those as set forth, I would say the inescapable—

Q. But your interpretation of the upper face and the underface means it would have to be the entire faces that are in engagement? A. Yes, these faces that are previously mentioned, that those faces do contact and not that some little part of some face contacts with some little part of another. [817] But of course in this instance there isn't a contact of even any portion of comparable faces.

Q. We did have (indicating)— A. Oh, excuse me. I was thinking you were referring back to the other. That is correct.

Q. So we will be clear, I am talking about the fourth element and the words "for maintaining the upper face of the shank in constant continuous contact with the underface of said plate portion," and you have interpreted that to require, due to the fact that the words "the upper face" are used and "the underface" are used, that you have to

have complete contact along the entire base between the shank and the plate member? A. Yes, as shown in the patent, and no other suggestion made for any departure therefrom.

Q. In making your drawings for your illustration did you try to make your drawings to scale? A. Not precisely.

Q. And there could be errors in them? A. Well, I know that there is a matter of clearance that is not shown on this drawing which—

Q. You showed the upper face of the shank in constant continuous contact with the lower face of the hinge member on that illustration, did you not? A. Yes.

[818] Q. That is what is shown there? A. That is right.

Q. Now we go on to this transverse pin in element 5. A. That is, it is shown in complete contact at that point. This drawing, of course, doesn't show anything about constant contact from a time element during the operation or whether under that time element there would be continuous contact. But at that point it does show continuous contact.

Q. Now, in view of that comment, let's consider the sense of the Graham 798 patent. Isn't it part of the objects of that patent to mount the shank so it would retain the resiliency of the shank? A. Of the shank?

Q. Yes. A. Yes.

Q. So the shank could flex? A. That is right.

Q. That is one of the purposes, isn't it?

The Court: Gentlemen, I think it is about time to recess. Court will be in recess until 2 o'clock.

(Noon Recess.)

[819] AFTERNOON SESSION, WEDNESDAY, MAY 8, 1962

CLARENCE T. FISHLEIGH, resumed the stand and testified further as follows:

Cross-Examination by Mr. Gold (Continued.)

Q. Mr. Fishleigh, just before the noon recess I was asking you about the Graham 798 structure and in the sense of that patent isn't there indication that the shank will flex? A. Well, I had worked on the assumption that the 798 patent didn't change the characteristics of the shank, but I don't find that statement, at least I didn't in looking through it just before the recess. If you can refer me to it I will be glad to—

Q. Did you go on the assumption that it will flex in a similar manner to the 811 shank? A. Well, not particularly the 811, but any shank of this type. I find some references to resiliency, but it seems to be as provided—seems to me to be as provided by the spring clamp that is mentioned here.

Q. Doesn't the third paragraph, Column 1, also indicate that "the shanks may rock when necessary and vibrate under action when the plow is working in rocky or heavy soils"? [820] A. Yes. But I don't interpret that as a specific reference to any action of the shank per se as distinguished from the flexible spring clamp.

Q. Wouldn't vibrate imply a flexing? A. Well, it might just as well be a movement of the spring clamp as of the shank itself, although I had assumed that it would act as other such flexible shanks.

Q. Of course then the wording that I read, it does say "the shanks" and it indicates that the shanks vibrate. That would indicate that the shanks would vibrate substantially the entire length, wouldn't it? A. Well, I think it is intended they would, but I think this reference, actual reference in the patent is to the action of the spring clamp rather than the shank per se.

Q. The Graham 811 shanks would flex substantially through their entire lengths, would they not? A. Well, certainly from the clamps down to the point.

Q. Also in the part above the plate member? A. They might.

Q. If there is flexibility substantially the entire length of the Graham 798 shank there would also be flexibility for substantially the entire length of the shank in the Deere 650 structure, would there not? A. Well, there would be from the clamp to the end of the [821] tool, or that is, to where the shank fastens to the tool. Certainly there is flexibility in that part of it.

Q. My question was if there is flexibility substantially the entire length of the Graham 798 shank then there would also be flexibility for the entire length in the Deere 650 structure? A. I don't think there is any necessary relationship as between the two. It doesn't—there either is or isn't in Deere irrespective of whether there is in 798, but I am saying that I think the flexibility of any consequence is in the portion from the—well, from the contact point with the hinged member to the end of the shank.

Q. Then you couldn't say that if there is flexibility in the portion of the shank under the plate member in Graham 798 that there would also be flexibility in the Deere 650 structure in the portion under the plate member? A. I don't think that one follows the other at all, if there is any relationship between the two.

Q. There could be a difference then in their action in your opinion in as far as flexing? A. Oh, there can be, yes.

Q. Now, I believe that we had started to go to element 5 [822] a little earlier, element 5 on Defendants' Exhibit 28, you have also applied a "No," but you don't find that element in the Deere 650 structure? A. Well, I think we perhaps discussed that and there is, of course, a transverse pin, but it is not at the rear ends of said normally contacting faces, as called for in that element.

Q. Of course you do agree that the Deere structure does have a transverse pin? A. Yes, certainly.

Q. And it does pivotally connect the shank attaching member to the fixed member? A. Yes.

Q. At the rear of the fixed member, rear portion of the fixed member? A. Well, toward the rear of the fixed member, yes, not at the rear but toward the rear.

Q. And that would be rearwardly of the contact of the shank with the underface of the lug 44, wouldn't it? A. Yes, sir.

Q. And that pivotal connection by the transverse pin is such that the shank attaching member in the Deere 650 structure pivots upon rocking movement of the shank? A. Yes, sir.

Q. So the function of the transverse pin, the fifth element [823] of Claim 1, is performed in the Deere 650 structure then, isn't it? A. Well, part of the function.

Q. Just part of it? A. Yes, sir.

Q. There is some function that is not performed? A. Well, it pivotally connects the shank attaching member to the fixed member, but its location is not as specified here in this fifth element, because insofar as the pivoting is concerned it does permit pivoting of the hinged member.

Q. Permitting the pivoting of the hinged member is the function of the pin, isn't it? A. Yes, sir.

Q. So the function is performed by the pin in the Deere 650 structure? A. That function of pivoting is performed.

Q. Going back to element 4 I notice that you have a note here at the right-hand side of the breakdown of claims and you state in the second paragraph of that particular note, "The Bolt 41 is the only means in Defendants' structure for connecting the Shank 12 to the Hinged Member 35. The Bolt 41 does not maintain the Shank and the Hinged Member in constant continuous contact along their entire corresponding faces during all stages [824] of operation." Now then, in putting in the part there about "along their entire corresponding faces," that was your language, wasn't it? A. My understanding of what the language in the claim element means.

Q. The words "their entire corresponding faces" is not present in element 4 of Claim 1, is it? A. No, that specific language is not there.

Q. Now, as far as the coil spring, element 6, you have indicated that you do find that coil spring in the 650 series? A. That is right, there are two of them there, but I don't think that affects it at all.

Q. Of course where we say "a coil spring," you have two coil springs, and of course you do have a coil spring

in two instances, don't you? A. I don't think in this instance it makes any difference. I have seen cases—in fact in the last case I testified it made a good deal of difference whether in a situation of that kind you said "a coil spring" or "at least one coil spring." But I don't believe in this instance it makes any particular difference, although it could under other circumstances.

Q. Now then we have a 7th element, "Means having connection with the forward end of the shank and with the other [825] end of the coil spring," and of course that is the spring bolt in the 650 series, is it not? A. That is right.

Q. And it does have connection with the other end of the coil spring? A. Yes, coil springs.

Q. And it does have connection with the forward end of the shank? A. That is correct.

Q. Then you still have "No"—in that particular part, if the actual element and the connection is there you know then it would be because of the faces that we have been referring to before, yet you don't agree as to the rotation of the contacting faces? A. Yes. Had the element stopped where you stopped in reading it I would have had no question, I believe, in saying yes. But it goes on to add some very specific language in addition to that and in view of that additional specific language, which is not applicable to 650, I said no.

Q. Of course that additional language is "whereby the spring yieldably maintains said normal contact of the upper face of the plate portion of the shank attaching member with the underface of the fixed member to maintain the normal plowing depth of the groundworking [826] tool." A. That is right.

Q. And as to this particular means in applying it to the 650 structure, the spring does yieldably maintain contact of the shank with the lug, with the underface of the lug 44, to maintain the normal plowing depth of the groundworking tool, doesn't it? A. Yes, sir.

Q. Now, as to your note, on the site of the arrow directed to the Glencoe structure are comments that you made on the over-ride, which you have below the illus-

tration of the 100 series, substantially applies to your notes in the part below the 650 series, wouldn't it? A. Well, as I recall it, at least my comments I believe would have.

Q. Mr. Fishleigh, you were asked on direct examination about a Defendants' Exhibit 8-D, which I believe you stated was a copy of Claim 7 from the 798 file history.

* * *

[827] Q. (By Mr. Gold) Do you have a copy? A. I have a copy.

* * *

Q. Now, in that breakdown that you have of Claim 7 you have five elements numbered in the claim, do you not? A. I don't have it. This was just handed to me, but there are five elements listed here.

Q. And there are seven elements in Claim 1 of your breakdown of Claim 1 of the patent, as shown on Defendants' Exhibit 28? A. Yes. They are numbered somewhat differently. I show an introduction in element 1, where this is not numbered, and then I believe the balance of them correspond reasonably well.

Q. And in your breakdown of Claim 2 you also had seven elements, did you not? A. I think so. Yes.

Q. In your breakdown of Claim 1, as shown on Defendants' Exhibit 28, you don't have a separate numbered element for the longitudinal extending underface, do you? A. I didn't have, no.

Q. And that would also be true of your breakdown of Claim 2, would it not? [828] A. That is correct.

Q. Now, I have placed on the easel Defendants' Exhibit 29. As far as the drawings of the Graham 798 at the left of the exhibit they are duplicates of what you had on the Defendants' Exhibit 28, are they not? A. I believe they are, yes, sir. Yes, I am sure they are.

Q. And a drawing of Defendants' structure 100 series that is to the right of the claim is a duplicate of what you had on the fly sheet or cover sheet on Defendants' Exhibit 28? A. Yes.

Q. Now, looking at the claim, which is Claim 2, with reference to the 100 series, you show the introduction as found in that structure, do you not? A. Yes.

Q. And the element that you have marked 1, the mounting, starts "A mounting," you found that element also? A. Yes.

Q. Now, the element you have numbered 2 you have marked "No." Let's consider that element. It starts out "A fixed member," does it not? A. Yes.

Q. Actually this particular element that you have numbered 2 is identical in wording to the element 2 of Claim 1, so wouldn't our comments that we had in considering [829] element 2 of Claim 1 relative to the 100 series also apply here? A. I am sure that my comments would.

Q. The wording is the same, is it not? A. I am quite certain that it is word for word the same.

Q. Now then, we will take the third element. You also have a "No" marked after it, don't you? A. Yes.

Q. That element says, "A shank attaching member having an elongated plate portion provided with an upper face."

In the Deere 100 series you do have a shank attaching member, it has an elongated plate portion, and that plate portion has an upper face, does it not? A. Well, it has a couple of other faces, but it has a portion which could be said to be an upper face.

Q. And it has an upper face that corresponds with and is normally in contact with an underface of a member that cooperates with it to form a stop, isn't that right? A. Well, not entirely. A small portion of one of the upper faces does come in contact with a small portion of the underface of the beam member to form a stop. That much is true.

Q. And as far as the engaged part of it, that would be a corresponding base on the two parts, wouldn't it? A. Well, yes. The small portion of the upper face of the [830] hinged member, which does come in contact, does correspond with that portion of the underface of the frame member with which it is in contact. That is correct.

Q. Now, this element also specifies "a longitudinally extending underface." The shank attaching member does have a longitudinally extending underface, does it not? A. Yes.

Q. And that underface is "in engagement with a corresponding upper face of the shank whereby the plate portion of the shank attaching member is between the shank and the fixed member," isn't that right? A. Yes.

Q. The element then says, "Said shank attaching member having a lug." The shank attaching member in the Deere 100 series does have a lug, does it not? A. Yes.

Q. It extends upwardly between ears on the fixed member? A. Oh, I think we could agree to that, yes.

Q. Then your Fig. 1, you show that lug portion behind this ear on this side, don't you (indicating)? A. That is right.

Q. And in Fig. 4 that would be the lug portion between those ears, would it not? A. Well, it is between that portion of the fixed member. [831] As we said this morning, there is some question as to the proper nomenclature, but it is the support for the pivot pin and I made no point of it, I am sure.

Q. Now, it is disposed adjacent to the rear end of the plate portion and above the plane of the underface that is engaged by the plate portion upon the stop? A. Well, it is toward the rear end of the plate portion. Yes, I would say it was at the rear end of the plate portion, but not above—what did you ask me? Above what?

Q. The plane of the face engaged by the plate member to form a stop. A. Yes, above the plane of the lower face of the beam member.

Q. Which does form the stop on which the plate member engages? A. Yes, against which the plate member engages.

The Court: You are talking about the hinged member?

Mr. Gold: Yes, sir.

Q. (By Mr. Gold) This claim element then says, "said shank attaching member having depending means embracing the shank at the rear end of said plate portion." I believe in your direct testimony you said that there was

a response of that part in the Deere 100 series, [832] did you not? A. Well, I believe I probably did, but I will say it now if I didn't.

Q. So actually in that case you have applied "No" to the element because of the particular stop faces that are used in the Defendants' 100 series? A. No, I wouldn't put it that way. I have said "No" because of the absence of the particular stop faces which are called for in that element, as I believe my note at the right probably points out.

Q. That is because there was, as you say, no surface on the plate portion of the hinged member that engages a face of the fixed member, isn't that right? A. That is correct, as called for in that element of the claim.

Q. And it is for that reason that you have applied "No"? A. Yes.

Q. Now, as far as the function of those stop faces, they do have—they are to provide a stop so that the spring will urge the plate and shank up to a normal position, isn't that right? A. Yes. We have a stop function performed by structure other than that which is called for in the elements of the claim.

Q. And as we stated relative to the 100 series when we were [833] comparing Claim 1 with it, if we removed this this little bit of metal here on the plate portion of the hinge member and placed it up on the upper end at the forward end of the hinge member so it would engage the underface of the fixed member below the part that the spring seats on, then you would have an engagement that would stop and the structure would still perform in exactly the same manner? A. Yes, but I don't believe that I agreed that under those circumstances we would even then have a proper or complete response to these elements.

Q. Of course we did say that this was an underface of that portion of the fixed member, did we not? A. Oh, I think we agreed that that was an underface.

Q. And the upper face of the forward end of the hinge member could be said to be an upper face on that hinge member, could it not? A. I would be inclined to say that in line—to describe it in line with some other description

I have seen as being the upper face on a beak member, beak portion of the hinged member.

Q. If you add a little bit more metal on this so there would be engagement and remove the metal here under the beam you would have a stop which would be provided by an upper face of a plate portion of the hinge member [834] with the underface of a portion of the fixed member? A. Yes, if you changed it from what it is to something different and made that something different correspond to what you say, that would be true.

Q. And if we kept the engagement such that the shank, when those faces were engaged, would be in the same position as shown in your Fig. 2, the operation in plowing would not be altered from the operation of the particular structure you show in these illustrations, is that right? A. Well, the operation in the plowing, as far as you could observe, probably would be somewhat the same. The wear on the structure might be somewhat different and somewhat different from what is shown in the Graham patent.

Q. Having the stop portions here on the forward end of the hinge member would cause more wear than what we would have with the stop faces as shown in the drawing? A. Certainly than is shown in the drawings in the Graham patent, yes.

Q. I am asking about the Deere 100 series. A. I don't think there would be too much difference there, depending upon the relative nature of the frame member and the fixed member.

Q. Then changing the stop to that forward end of the hinge member wouldn't change the pivotal action of the shank or the hinge member, would it? [835] A. I don't believe it would, essentially, assuming that you kept it so that it didn't change it.

Q. And it wouldn't change the action of the bolt 13 that connects the hinge member to the shank, the forward end? A. No.

Q. And it wouldn't change the function or the operation of the spring and spring bolts, would it? A. No.

Q. So all those parts then would act the same, regardless of which place you had the stop portions? A. Substantially I think, yes, sir.

Q. I find that you do indicate that in this claim you do have the bolt in element 4 in the Deere structure and have marked "Yes" after that element, haven't you? A. Yes.

Q. I notice in the fifth element, again the pivot pin, you marked "No," but there is a pivot pin present in that Deere structure? A. Yes.

Q. Extends transversely through the lug on the shank attaching member? A. Yes.

Q. And it is carried by the ears of the fixed member? A. That is correct.

Q. With the axis of the pin above the plane of the underface [836] that forms a stop on this particular clamp? A. Yes.

Q. And the function of that pivot is to permit the hinge member or shank attaching member to pivot, isn't that right? A. That is right.

Q. And these contacting faces that form the stop on the pivoting of the hinge member would immediately move out of contact with each other, would they not, on the rocking movement? A. Of the shank and hinged member, yes.

Q. In other words, there wouldn't be any sliding action, they just plain separate, don't they, when the forward part of the hinge member rocks downward? A. Well, they separate like any two members which are evident about the common point. It is a rotary separation as distinguished from a linear separation.

Q. We do have a pivot pin in the Deere structure and it does have a function except again you put "No" because of the location of the stop faces? A. Well, yes, because it doesn't fit in with the language which has been put in here. If this language wasn't important and wasn't in here, then—in other words, if the element were different than it is now we might very well have found a response to it. [837] Q. Then your answer is that it was actually due to the location of these faces that you have put "No" on

that element? A. Well, it is due to the fact that the pivot pin is not so organized whereby the normally contacting face of the shank attaching member immediately moves out of contact with and away from the face of the fixed member. That is not present there and consequently I said "No."

Q. In the 6th element you show the coil springs present? A. Yes.

Q. In your 7th element, again this relates to the spring bolts or means that connect the forward end of the shank with the other end of the coil spring, and you have "No" there. Now, can you explain why you placed "No" on that element? A. Yes, for the same reason, because here once more after describing these means, which is the spring bolt, rather generally, it goes on and adds the fact that "Whereby the spring yieldably maintains said normal contact of the upper face of the plate portion of the shank attaching member with the underface of the fixed member." It specifically spells out the specific contact that it requires and that specific contact is not present.

Q. Then all of these "Noes" that you have placed after [838] the elements of the claim actually are there because a plate portion has a face engaging the underface of the beam instead of an underface of the fixed member? A. Well, because it doesn't have the underface of the fixed member in engagement with the upper face of the hinged member, as set forth in this claim, repeatedly injected it into each one of these elements.

Q. Now, was your answer any different than what I said in my question? A. Oh, I think it is.

Q. My question was, I believe, that the reason you have placed "No" in each of those elements is because the upper face of the shank engages the lower face of the beam of the frame and not a lower face or underface of the fixed member? A. My "No" has nothing to do with the fact that the upper face of the hinge engages the lower face of the frame. It goes entirely to the fact that there is not the engagement of the underface of the fixed member with the upper face of the hinged member, and I am sure that if I agreed to that you would find that it was different six months from now.

Q. In making a clamp in 1953 or '54, a structure such as shown in Dunbar was available, was it not? A. Yes. The teaching of it or the showing of it was. [839] I am not sure about whether or not there was such a structure.

Q. Deere could have made such a structure as shown in Dunbar instead of making the 650 series, couldn't they? A. As far as I know they could have.

Q. They could have also made a structure like in the Rix patent, couldn't they? A. That is right.

Q. They could have made a structure like is shown in the Petersen patent, could they not? A. Yes, as far as I know.

Q. And they could have made one like is shown in the Cobb patent? A. That is right.

Q. And they could have made one like is shown here in the Glencoe? A. I don't—that is, they could have made it, but whether they would have been free to make such a structure. I don't know that they would have. I haven't made a study of that. I know there are some patents covering that or later modifications. I haven't studied the detail of them.

* * *

[844] Q. Do you know about the survey that you made of the spring clamps in the field? A. I was here in court when such a survey was discussed. I have not read it. I have not read either one of them, but I learned here, and had heard about them previously, that there were such surveys.

Mr. Gold: Your Honor, I would like to introduce Plaintiffs' Exhibits O and P. Exhibit O is the file wrapper of the Rolf patent No. 2,739,518.

Exhibit P is soft copy of that same patent.

The Court: Very well, they will be received.

(Plaintiffs' Exhibits O and P were received in evidence.)

Re-Direct Examination by Mr. Morris.

Q. Mr. Fishleigh, we have all sat here now for something over a half day as plaintiffs' counsel has nimbly stepped through an attempt to apply the mechanical elements of the two claims in suit to the Deere structures,

and I note that as we come to each crucial element wherein there is language of significance, that language has been avoided. If the language were given its application in the light of the prior art which existed at the time this patent was issued, and in the light of the Patent Office procedure under which this [845] patent was issued, and in the light of the specifications and the drawings contained in the patent, would any one of those elements which you testified about in your opinion be fairly applicable to either the Deere 650 or the 100 structures?

Mr. Gold: Your Honor, we would like to object to the question as being very leading.

The Court: I think the question is somewhat leading, and very general.

Mr. Morris: Your Honor, I can go through the tedium the same way that we have had it here, step by step, item by item. I had hoped to avoid consuming that kind of time.

The Court: The Court wishes that you could too. It is obvious what the witness's answer would be.

Mr. Morris: The answer would be so obvious. But that is all right. I will come at it in another way.

Q. (By Mr. Morris) Mr. Fishleigh, looking at the prior art as existing at the time this application was filed, that is the 798 application, and looking at the specifications and drawings from the patent and to the file wrapper history, do you think that under any stretch of the imagination the frame member of the plow could be construed to be an element of the clamp? [846] A. No, except as for the environment as it is indicated in the introduction.

* * *

[847] Q. (By Mr. Morris) Considering the same factors, Mr. Fishleigh, that is, the state of prior art, the disclosure of the specifications and the drawings of the patent and the proceedings in the Patent Office, do you think that under any reasonable interpretation the depending lug element of the Deere 650 clamp contacting an upper face of the shank itself could be construed as mechanically the same thing or substantially the same mechanical thing as a contact of the longitudinally extending underface of Graham 798 with Graham's longitudinally

extending upper face of the hinge member? A. I do not. [848] Q. Mr. Fishleigh, there are a few specific things I would like to direct your attention to and get them out of the way before we go ahead with some of the other matters. May I have the prior art chart with the Carter disclosure on it?

Mr. Fishleigh, I have placed on the easel Defendants' Exhibit 19, which contains a group of prior patents and prior public uses, one of which is Carter. Yesterday you were asked some question about Carter on cross-examination, particularly with reference to how that device would pivot. Have you had an opportunity to study the Carter drawings overnight and look at that particular question? A. Yes, I have given further thought to it.

Q. All right. From looking at the drawings further can you explain to the Court how the pivot would occur in that structure? A. Yes. We have already pointed out that the perspective in Fig. 2 is not particularly good perspective and I believe the same thing applies to Fig. 1, that there would be on the upper—in fact, it tends to show in Fig. 3 in the lower left corner that where you had a pin—

The Court: Pardon me, are you talking about Fig. 3 shown in the other diagram? It doesn't show on [849] this—

Mr. Morris: No, it is shown in the patent, Your Honor, in the book of patents, Exhibit 5.

A. Well, there is shown a pivot "L" running crossways of the hinged member with a connection to the main body at the center of that pin, and looking at the Fig. 3 and also Fig. 1, which of course is shown, it looks to me as if there were a couple of fingers straddling that portion that extends from "L" back to the main body so that there would be a pivotal action, but that even though shown in the drawings, that those fingers would not interfere with the tilting action.

Q. To demonstrate that more clearly and understandably, assume that my hand here with this pencil between my fingers represents the portion called the pivot block in Carter. Then a fixed member which is attached to the frame upon which that member pivots, if it had two fingers catching over the tops of the extension, the two

extensions of the block, is that what you are saying would be the place it would pivot? A. Yes, as indicated perhaps in the bottom part of Fig. 3, just below the letter "J".

Q. In the particular view that is shown on our chart here which is Fig. 1, and is in part a cross-section of that particular device, is the device drawn so that you can [850] look behind and see the pivotal fitting? A. Well, I think it is intended to be, although the delineation as of 1880 is not the way that we certainly would draw it today.

Q. All right, sir. Now then, Mr. Fishleigh, as an engineer, not just you but as any engineer, in looking at the drawings and interpreting the drawings, are you dependent upon what accompanying specifications there might be to tell you everything that there is shown in those drawings? A. No, not everything. There are many things which drawings in and of themselves show.

Q. Is it a common and ordinary procedure to omit those routine, usual things which would be readily understood to those people versed in the trade? A. In patent drawings you mean?

Q. Yes. A. Yes. In fact, very frequently in instances of that kind those common features are shown diagramatically merely by a rectangle, and you assume that the person in the art to whom the patent is addressed knows what is meant.

Q. Mr. Fishleigh, you were asked a number of questions concerning these prior art disclosures as to whether or not they related to harrows and cultivators as [851] distinguished from chisel plows. Is there anything in the 798 patent that tells you anything at all about the size of the tool involved? A. No.

Q. Is there anything about the fact that the particular device is in the harrow or cultivator art that confines its mechanical teachings to that art? A. No, sir.

Q. As an engineer, taking a particular structure and a particular spring clamp structure used in the harrow and cultivator art, do you feel that it would be within your capacity to transfer those structures into some other type agricultural implement and apply their use? A. Yes,

wherever such action was needed and if it involved greater forces to increase the strength and size of the part accordingly.

Q. If you have a workable structure in a light implement, such as harrows and cultivators, is the problem of transferring to heavier tools primarily one of size and strength of tools to carry the particular force loads which they will be called upon to carry? A. In most instances, yes, unless some unusual conditions are to be encountered which might change it.

Q. Yesterday you were asked what was the function of the rear support web or the rear web portion of the Deere [852] 650, and I believe at that time you stated that it was to control the shank on rebound or recoil action. Does it have any other function, Mr. Fishleigh? A. Yes, it does.

Q. What is that, please? A. To provide a supporting strut to strengthen the fixed member, to strengthen the two side flanges of the fixed member.

Q. To provide lateral support for these two side flanges? A. That is correct.

Q. In tools of this sort, from your own observation, are there substantial lateral forces that would tend to force the shank to one side or the other? A. There are at times, yes, sir, very substantial.

Q. Now, you were asked a long series of questions about bending of the shank and flexing of the shank, and I would like for us to be absolutely certain that we don't have any conflict or misinterpretation of the two terms. Now, as I understood your testimony, you are using "bend" primarily in the sense of distorting the thing beyond its elastic limits so that it takes a permanent set and does not return, is that correct? A. Well, yes, I had used that certainly as a general basis.

Q. On the other hand, the matter of flexing and returning [853] to its former position you have called the resiliency of the shank, is that correct? A. Yes.

Q. That is the sense in which they have been used here? A. That is correct. I am not absolutely sure that they have always been used that way, but I think that is the way that I have used them.

Q. Now, in the 798 patent I wish you would refer to column 2 on the first page of the specifications, the sentence beginning in Line 21: "The bar stock is shaped to provide a substantially straightened portion"—wait, that is not the reference I want. Yes—I am too far down. The same column, the sentence beginning in Line 17: "The shank 2 is formed of metal bar stock of substantially rectangular cross-section and is of a width and thickness to provide the necessary strength and a certain amount of resiliency." Do you find anything else in the specifications which gives any specification as to size of plow shanks or as to any other size of the parts of these plows or of these claims? A. I don't recall any at all.

Q. Do you find any other reference in the specifications which would indicate what it is that gives the resiliency to the shank other than the size of the bar stock from [854] which it is formed? A. No.

Q. Would that apply equally well to bar stock a quarter inch thick and two inches wide as it would to bar stock three quarters inch thick and two inches wide? A. Yes.

Q. Or to bar stock an inch thick and two inches wide? A. Yes. The amount of flexing or resiliency for a given load might vary, but at least the same fundamental teaching would be there regardless of the detailed size.

Q. Do you find anything in the patent at all which would confine these clamps to an application in a so-called chisel plow as compared to a cultivator or a harrow implement? A. No.

Q. Now, you were asked a great many questions about bending or flex of the forward end of the shank up inside the mounting or clamp between the point of pivot and the point of forward attachment of the bolt or forward attachment of the spring rod. Do you find anything in the specifications, the drawings, the file wrapper history, or the claims of this patent, which would suggest at any place that there is a bending or flex of the shank of any consequence whatsoever in that area? A. No, I don't. In fact, I find the contrary in the [855] elements of the claims, where they provide that the shank shall be held in constant continuous contact with the plates or hinged member, which would indicate the converse of bending.

Q. I believe you pointed out in connection with Fig. 6 of the patent drawings, Defendants' Exhibit 21-C, as set out on Defendants' Exhibit 21-C, which shows the clamp in a pivoted or rocked position, that the shank and the hinge member are in continuous contact throughout their entire length, is that correct? A. Yes, that is consistent with the requirement in the mechanical element of the claim.

Q. And if there were any bending of consequence to be emphasized or with which this patent was attempting to deal, would that be one of the points at which in your opinion the flexing would be at its maximum, if there is any? A. Yes, and should certainly be shown diagrammatically in such a view.

Q. Now then, you have been asked—well, let's just stop right there. In your opinion, Mr. Fishleigh, from studying these structures and from observing operation, is any tendency to flex which there might be in the forward portion of the shank within the clamp structure itself of any significance or consequence whatsoever [856] to the operating function of these structures? A. No, sir.

Q. These spring steel shanks of the sort which are used in the agricultural tools of this type, I am holding one here in my hand, which happens to be a Cockshutt shank, but is it representative of the types of shanks which are used in these plows? A. Reasonably so, yes, sir.

Q. In that type of spring steel shank, in the curvature here to the rear, extending from the groundworking tool around the curve up to the point of attachment to the clamp member, is there a deliberately designed resiliency? A. Yes.

Q. Is that the intent of that long curved area of the spring steel bar stock? A. That is correct.

* * *

[857] Q. * * * From the particular shape and design of that type of spring steel shank where, in your opinion, would it be likely to have significant flexing action? A. From the rear end of the clamp to the lower end of the [858] shank.

Q. Now, you were asked a long series of questions about direction of flex or bend and relative direction of

flex. I would like for you to take any one or all of these structures that I am going to outline here now, Graham 811, Jeoffroy SC-580, Glencoe, Graham 798, and consider the direction of flex in the shank itself, assuming that there is some, is there any difference in any of those structures of the direction of flex insofar as the shank itself is concerned? A. No, sir.

Q. Could you demonstrate that, please? Could you point it out how that is true? Put whatever drawings are necessary on the stand to work with. I believe we have 811 and 798 already there. Let's put Jeoffroy 580 and Glencoe on the easel. A. Well, in all cases if a sufficient load were encountered, the point of the tool would be moved backward and there would be a tendency to flex along the line that I am now indicating, considering the portion in front of the—or that is, behind the clamp. That would also be true in Graham 798 and it would be true here in Glencoe, and if as a result of the stressing there is any tendency to flex or any actual flexing, although it is my view that while there may be some tendency the actual [859] flexing will be very small, a matter of at most a very few thousandths, that would tend to be a curve as I am showing it, in each one of the cases, and the reason that that is possible is that in a structure such, for example, as Glencoe, and there is enough clearance in that commercial structure so that when the shank moves against the top of the opening through the loop 29 it gives ample clearance space for any bending which actually does occur in such a shank.

Q. In each of these examples—incidentally, I believe you did not mention the Jeoffroy SC-580 structure but if we had the shank exposed here, curved downwardly from the drawing, Defendants' Exhibit 18, would the same thing be true that you have just mentioned as to the other three? A. Yes.

Q. Now, in each of these structures, 811, 798, Glencoe, Jeoffroy SC-580, Mr. Fishleigh, is the force on the plow tool and in turn on the shank rearwardly and upwardly while it is in the ground? A. Yes.

Q. Is there a downward force provided either at a pivot pin or at a portion of the clamp which operates downwardly onto the shank to resist the upward and rearward

thrust on that shank? [860] A. Well, there is a resistance at that point.

Q. All right, let's call it resistance. A. Not an active, aggressive force to push it down, but to resist upward movement.

Q. To resist the tendency of it to come upward? A. That is right.

Q. And is that true whether the pivot pin is located above the shank as in 798 or below the shank as in 811, Jeoffroy SC-580 and Glencoe? A. Yes.

Q. And on the opposite side of the fulcrum point, whatever it be, whether it be some other portion of the clamp or the pivot pin itself, is there in turn an opposing force furnished by the spring and its attachment which opposes the tendency of the shank to be forced upward at the rear? A. Well, upward and rearward. That is actually a rotary movement around the fulcrum or pivot point.

Q. Around the fulcrum point? A. Yes, sir.

Q. So it is true then we have an upward force tending to pivot the shank around whatever its pivot point may be and on the opposite side an upward force which tends to oppose that force which tends to rotate it? A. That is correct.

[861] Q. So that the resultant bends or flexes in the shank, regardless of which of the clamps it may be, would be of the same direction insofar as the shank itself is concerned? A. That is correct.

The Court: I would like to ask one question in that connection. Is it your testimony or is it your opinion that the stresses applied in each one of these devices on the shank and throughout the entire length of the shank, wherever it may be, would be the same regardless of whether the shank were located above the fulcrum plate or below?

A. Yes, sir.

Q. Would it make any difference as to the distribution of that strain? A. I don't believe it would, at least of any important consideration. There might be some slight difference that one could determine in a laboratory which might give a slight variation, but from a practical standpoint I don't believe there is any practical difference.

Q. Passing on to the further consideration of the point along the lines the Court has just inquired about, assume that there is a tendency in the shank to flex between its forward portion, between its fulcrum point and its spring tension. In each of the structures [862] we have just gone over, 798, 811, Jeoffroy SC-580, and Glencoe, would the direction of flex in that portion of the shank itself, if there is any, be the same? A. Yes.

Q. In answer to Mr. Gold's question I believe you pointed out that the loose type of construction was sufficient to provide the necessary clearances for whatever tendency to flex there might be in that structure? A. That is my opinion anyway.

Q. And you have just testified in connection with Glencoe that in your opinion the clearances through the loop element again would be sufficient to provide whatever—to accommodate whatever tendency to flex there might be in the forward portion of the shank, is that true? A. That is correct.

Q. Will you indicate to the Court, please, in the particular Glencoe hinge member, which we have here, the clearances you are talking about. A. Yes. As I look through above the shank and between the shank and the loop I can see there is quite a substantial space there, and if it is loose it can be moved or even though tight at the other end if there is sufficient forces to tend to flex the shank, the shank can move up that amount and the amount of the bending which would occur between the bolt and the loop [863] could take place in there without restriction by the hinged member.

Q. Is there anything whatsoever in the record pertaining to 798, either its specification, its drawings, its claims or its history, which would indicate any provision for clearances at all? A. No.

Q. Is there anything—assuming there were some, would there be anything to indicate any clearances any greater than here in the Glencoe structure? A. No.

Q. Is there any basis then in the claims, the specifications, the drawings and the file wrapper history, to assume that there is a provision for flex in the 798 structure that is not fully accommodated in Glencoe? A. No.

Q. Do you find one single word in the entire history of 798, again all four places, the history, the specifications, the claims, or the drawings, which says anything whatsoever or indicates anything whatsoever about a direction of flex of the shank relative to the hinge member in that forward portion? A. No.

Q. Is there anything in the file wrapper history at all or the specifications to indicate that the patentee was [864] addressing himself to a problem of that sort? A. No.

Q. Is there anything in the specifications or the claims or the history which tells you whether or not this structure would be a fabricated structure from steel or a cast structure from malleable or some other casting material? A. No.

Q. Turning our attention to another matter, Mr. Fishleigh, yesterday I sought to ask you whether or not the person having ordinary skill in the art could do certain things, and objection was leveled. We didn't pursue the matter further. Today on cross-examination Mr. Gold asked you this question: Would the Hunter 650 patent structure have been obvious to a person ordinarily skilled in the art? And I believe you answered that probably it would. I now ask you whether, considering the 798 structure at the time of its alleged conception in 1951, whether it would have been obvious to a person having ordinary skill in the art as of that date?

Mr. Fishburn: Your Honor, I want to object to that question. Just because Mr. Morris waived objection, that is no sign we are bound by that. If he didn't see fit to object to that question, that is not binding on us.

[865] The Court: That is probably true, but you asked him the same type of question.

Mr. Fishburn: That is all right. He should have objected to it, if he didn't like it he should have objected to it. He didn't do it. That doesn't preclude us from making the same objection, that it is improper.

Mr. Morris: Your Honor, I think these people opened this door wide open to what would be obvious when they inquired along those lines.

Mr. Fishburn: I don't agree, Your Honor, I can tell you an instance which happened right in this court, before the late Judge Otis, Mr. Scofield probably will remember it, where the same identical question happened, and Mr. Scofield also knows the late Arthur C. Brown, with whom I worked, and Mr. Brown let a question go by, let a piece of evidence go in without objection because he wanted to get the same thing in on his case. When it came time to do it, Mr. Scofield and Ray Watson, who has also now passed on, made objection. Mr. Brown says, "Well, they put it in." And Judge Otis said, "That makes no difference, you didn't object to it. So naturally it went in, but it is improper and you can't get it in." This is the same situation.

[866] The Court: That is true, if you don't object to the admission of testimony it goes in for what it might be worth.

Mr. Morris: I am not seeking to strike out that testimony, I am saying that they have opened the door to permit this witness to testify as to what was obvious to a person having skill in the art. They opened the subject matter.

The Court: Was that a permissible question in a proceeding of this kind? I thought we went into that the other day and confined the witness' answer to whether it was obvious to him. Of course a person skilled in the art, that is getting somewhat remote. I don't know as to who a person skilled in the art would be. I don't suppose anyone with 100 percent clarity and definiteness could say.

Mr. Morris: Your Honor, I heeded the Court's ruling meticulously, I think, and because of the Court's ruling, I think the question was proper in the first instance, but that is not for me to decide. That is the Court's decision. But here opposition comes along, asks precisely the same question, opening the door as to this witness' testimony as to what would be obvious to a person having skill in the art, and I believe that I am entitled to pursue the matter since [867] they have opened it.

The Court: What do you say about the general legal proposition? If you fail to object to evidence and it is inadmissible of course you are waiving your objection.

Mr. Morris: Means I can't complain about the admissibility of their question, but it has nothing to do with whether or not they have opened the door, authorizing me to ask the same type of questions of the same witness upon the same subject matter.

The Court: I think you could ask the same question of the witness, as to the specific question answered regarding the Hunter patent. But whether that would open the door to all types of evidence along that line, assuming the ruling is correct, is another matter. I don't think it would.

Mr. Morris: Well, I have said all I have to say about it, and what the Court rules I am going to abide by. If the ruling is against me, I want to go ahead and make my bill, except to the Court's ruling and go ahead and tender this testimony for purposes of the bill at this time.

The Court: Of course the ruling will be the same as it was on the prior day, that testimony of that type is inadmissible.

[868] Q. (By Mr. Morris) All right. In order to avoid wasting time later on, because there are only two questions—really only one, to turn to my question for purposes of the bill, Mr. Fishleigh, looking at the state of the art as it existed at the time of the alleged invention of 798, in your opinion would the disclosure of 798 have been obvious to a person having skill in the art as of that date? A. I believe it would.

Q. Now, Mr. Fishleigh, yesterday you were asked a number of questions having reference to the Rolf patent and its history, particularly as to what might have been considered by the Patent Office. I believe the inquiry carried only forward to about page 15 of the file wrapper. I would like for you to take that same file wrapper, which is Plaintiffs' Exhibit O, and turn to page 20 and just read that to the Court, please. A. Beginning where?

Q. Read the entire page, start with the date of it and go right on through.

The Court: I might say the Court has already read it. But go ahead and make your record.

Q. (By Mr. Morris) All right, let's make a record on it. A. "April 19, 1952. Responsive to amendment filed May 25, 1953.

[869] "Additional reference made of record:

Graham 2,627,798 Feb. 10, 1953 97-47.83

(Filed August 27, 1951.)

"The above cited patent has become available as a reference since the first Office action.

"Claims 1 and 2 are rejected as not patentable over the above cited patent to Graham, 2,627,798, in view of the patent of record to Graham, 2,493,811, and either of the patents of record to Jones or Elder. It would not require invention to reverse the position of member 12 of Graham, 2,627,798, so as to place it on the lower side of the tool shank 2 as is the member 63 of Graham, 2,493,811, and to substitute the nut and washer and convex surface of Jones at 13 or Elder at 'E', for the member 64 of Graham, 2,627,798. Such a substitution of equivalents would be no more than an obvious substitution of well known equivalents, not amounting to invention."

Q. Mr. Fishleigh, can you step down here to the table, please, and demonstrate to the Court the utter simplicity of reversal of the position of the hinge member and shank in the Glencoe structure? A. Well, yes. The shank and hinged member of Glencoe—

Q. Let's first put it in the structure in its normal position. In its normal position the hinge, of course, is below the shank as we have it in the device now, is [870] that correct? A. That is correct.

Q. All right. What would be the first change to make? A. Well, the first thing would simply be to remove the pivot pin and turn the shank upside down.

Q. When you have done that, what else would be necessary? A. If I did no more than that I would not have a proper stop member, but all that would be necessary would be to remove the lug from one side to the other or to put a stop lug on the upper side where the stop lug of Glencoe has been previously.

Q. Can you demonstrate that, please? A. Yes (demonstrating).

Q. When you have completed that second simple change would you then have an operative structure? A. Yes.

Q. Of course in this instance the lug that has been added has merely been screwed on by some small screws? A. That is right.

Q. But in commercial manufacture how would you expect it to be done? A. I would expect it to be an integral part of the hinged member just as the present Glencoe lug was an integral part of the hinged member.

Q. Now return to the stand, please. I would like to identify [871] that little lug element by a separate exhibit number. We will number that as Defendants' Exhibit 3-A, merely to keep it separate from the clamp as a whole, which is Defendants' Exhibit 3.

(Defendants' Exhibit 3-A was marked for identification.)

The Court: What serves the lug in the regular position is a bolt which—

Mr. Morris: No, sir, a lug directly opposite, of the same type but on the opposite side of the hinge member.

A. Member marked on drawings Defendants' Exhibit 17 as 36 contacting a lug on the fixed member immediately above it.

Mr. Gold: If Your Honor please, I believe that the record should also show that apparently the original Glencoe clamp, Defendants' Exhibit 3, has been altered to accommodate this additional lug member.

Mr. Morris: It has certainly been altered by putting two screw holes in it and threading those screw holes to receive the lug on the opposite side, just as we have demonstrated it here.

The Court: Yes, I understand it is just for demonstration of change in the Glencoe device.

Q. (By Mr. Morris) Now then, Mr. Fishleigh, have you prepared a drawing of the Glencoe structure to demonstrate [872] or to indicate the modification of the inverted parts, just as we have demonstrated it in the physical exhibit here? A. Yes, I have prepared such a drawing, it is on the easel and marked as Defendants' Exhibit 17-A.

Q. Will you point out on the drawing, please, very briefly, the modification that has been made. A. Yes.

The hinge member 21 has been turned upside down and put back on the same pivot that it was on before, and in this instance an additional lug member marked 36 has been installed upon what is now—that is, in the modified position—is now the upper face of the upper side of the hinged member in the same position that the lug 36 previously was, so that it would contact the same lug on the fixed member that 36 previously contacted, and will hold the hinged member and shank in the same position, relative tilted position that it was in the preceding—in the original drawing, Defendants' Exhibit 17.

Q. In the inverted position as we have just demonstrated it here, would there in your opinion be any substantial difference in the ultimate over-all functioning of that structure as compared to its original condition with the plate inverted? A. No substantial difference.

[873] Q. Would you recognize, Mr. Fishleigh, that when you took it into the field with that change alone you might possibly find that the particular parts weren't strong enough to handle the loads that were encountered? That might be possible? A. Well, more particularly I would think that there is a little less lateral stability so that it might require a little change in the design of the fixed member to give comparable lateral stability.

Q. And if that turned out to be true after testing, what kind of problem, engineering or manufacturing problem, would exist? A. That would be a draftsman's job. I wouldn't even think you would call it really a designer's job even.

Q. Would it merely be the matter of strengthening the material sufficiently to stand the stresses? A. Strengthening the material and the part.

Q. Now, in that orientation with the plate inverted as shown on Defendants' Exhibit 17-A, Mr. Fishleigh, if we construe the mechanical elements of the Graham 798 claims in the broad manner in which Mr. Fenton has construed them here yesterday or in the broad manner which Mr. Gold suggested on his cross-examination today, would you find a response for the mechanical elements, for each and every one of the mechanical elements in [874] the two claims in the Glencoe structure as shown on 17-A? A. Yes.

Q. Just two or three other little items I would like to check with you if I may. This is perhaps a misunderstanding of the question and answer on my part, but I am not certain about it. I believe you were asked a question pertaining to the Deere 100 clamp and were asked whether or not the device would be an operative structure without the strap and two bolts to hold the shank at the rear, and I understood your answer to be that it would be an operative structure. Did I just hear it wrong or what is the testimony in that respect? A. Well, you either heard it wrong or I misspoke, if I was asked that question, because it is clearly my opinion on the matter that it would not operate satisfactorily for the purposes intended without that strap at the rear, and I am quite certain as to that.

Q. Just as you testified that the Graham 798 structure in your opinion would not be operative with the bolt alone, with the stirrup or loop member eliminated? A. That is correct.

Q. You were asked a number of questions as to whether certain modifications of the Deere structures could be made and whether they would operate just the same. [875] Let's take first the suggestion as applied to the 100 structure. We could merely remove what was called "a little metal" off the top of the hinge member where it contacts the beam and add a little metal to the top of the hinge member so that it would contact the forward extension of the fixed member, whether it would then operate just the same as it does in its present condition. I would like to ask you two questions. Insofar as the ultimate overall result is concerned, that is, the plowing operation, would it operate substantially the same? A. I think it would.

Q. Insofar as providing the stop function would you have the same cooperation of parts to provide that stop function in the modified—suggested modification as in the present structure? A. No.

Mr. Morris: Now then, Your Honor, there was one matter which I failed to inquire about yesterday on direct examination of this witness. It is not strictly re-direct or responsive to anything raised on cross here. I would like the opportunity to present that one additional matter as part of the direct testimony, if I may.

The Court: I think that is within the [876] discretion of the Court. You may.

Q. (By Mr. Morris) Mr. Fishleigh, you have heard some references here to the Cockshutt structure, which was held not to infringe in the suit of Graham versus Cockshutt. Some questions have been asked about it. I hand you two drawings here which have been colored and marked as Defendants' Exhibits 1-A and 1-B. I will ask you if you have checked those drawings and compared them with the Cockshutt structure, which is in evidence here as Defendants' Exhibit 1, to determine whether or not they are a reasonably accurate representation of the structure of that clamp? A. I have.

Mr. Fishburn: If Your Honor please, if this is for the purpose of comparing the accused John Deere structures with the Cockshutt structure, then we object, for the same reason that I stated a moment ago, that we put in these Jeoffroy devices because they were a copy of the 798 patent, without any objection. Now, that does not waive our right to object to putting in structures or evidence relating to the Cockshutt device. If it is for the purpose of comparing the Deere structure with the Cockshutt clamp, then that is not proper in our opinion and we want to object to that. The only question is whether or not the claims of the [877] 798 patent are infringed by the Deere structures and not comparing those structures with some other structures.

The Court: As I understand it, the matter was passed upon of whether or not the Cockshutt device infringed the device in question here, the 798?

Mr. Morris: The 798 patent.

Mr. Fishburn: The court has ruled that was not infringement of the 798 patent. Now my point is that it is improper to compare the John Deere devices with the Cockshutt device to determine whether or not there is infringement of this patent.

The Court: I don't know whether that matter would be determinative in and of itself of the issue in question. It might shed some light upon it.

Mr. Fishburn: I don't think it proper at all to compare them. The question is whether or not these devices in-

fringe the claim, and you have got to consider the claim and the prior art, and not some other device that was held not to infringe, which was several years later than the patent, not prior art at all. If it were prior art it would be a different thing, but since it is not prior art it is improper to compare the Deere devices with the Cockshutt device, just because it was held not to infringe this patent. [878] Mr. Morris: Your Honor, I believe we had that out the first day here.

Mr. Fishburn: I don't believe we had it out at all. It was brought up but it wasn't passed on, and if the Court doesn't agree with me then I want an exception and to brief the matter.

Mr. Morris: We had the same objection raised as to the admissibility of the Cockshutt structure itself, Your Honor, and this Cockshutt structure, in my opinion, is admissible upon two grounds. First of all, plaintiff here has offered in evidence the Jeoffroy structures which were held to infringe, and I assume has been forced to argue or tries to argue that the Deere structures are substantially the same as the Jeoffroy SC-580, and have asked numerous questions along that line in evidence here the last few days. I think it is equally pertinent though, as the Court says, it is not determinative, to point out the structure of the Cockshutt device which was held not to infringe this patent. I think the use of this structure, what it shows and what elements it hasn't shown, may be used as proper to reflect the cross-examination of expert witnesses.

The Court: I would think if it sheds any light upon the issues in this case it would be admissible testimony. It might be that your objection is valid in [879] that it does not at that stage apply to the prior art. However, for the purpose of this trial, I am going to admit it at this time. I can receive briefs on it and if you are correct it will not be considered, will be later stricken and not considered in the ultimate decision.

Mr. Scofield: Your Honor, I submit, too, that it is comparable to expert testimony. Here the court has passed on what structure was not infringed by this same patent, and that should be helpful to this court in the in-

terpretation of the same patent here. That is, it is much like our expert testimony which would be given to indicate to you what structure infringes or doesn't infringe. They have put in some that did infringe and I think by the same token that the defendants here should be entitled to put in that that was held not to infringe.

Mr. Fishburn: I would like to make one more remark, Your Honor. That argument is entirely contrary to the argument Mr. Morris made in his opening statement that in order to prove these claims you consider the claims and the prior art, and you cannot consider some other foreign matter that isn't prior. If there were prior art it would be different, but this is something entirely foreign.

[880] The Court: What if that was identical to the structure that was held to infringe? It might shed some light upon the issue. The only purpose, I think, it might show is to shed some light upon the ultimate issues involved in this case. If it doesn't it would not serve any purpose and would not be of any effect in the case. As stated previously, I think it will be admitted at this time for whatever weight it might have, and I will be glad to receive any briefs on any ruling on that particular point, whether it is admissible. If the ruling is that it is not admissible the testimony in that regard will be disallowed and not considered in the ultimate decision in the case.

Q. (By Mr. Morris) Mr. Fishleigh, I have handed to you the two colored drawings marked Defendants' Exhibits 1-A and 1-B. Have you compared those drawings with the Cockshutt structure, Defendants' Exhibit 1, to determine whether or not the drawings fairly reflect the structure as shown in the mechanical device, Defendants' Exhibit 1? A. I have.

Q. And what is your conclusion ? A. That they do fairly represent the Cockshutt structure, Defendants' Exhibit 1.

Q. Is there any difference between the drawings and the actual clamp which you think should be pointed out? [881] A. Well, I believe there is one difference, if I may check it, please. On the actual clamp there is a recess in the bottom section of the fixed member toward the rear of the clamp, which does not show on the drawing, but which I do not believe is a matter of materiality.

Q. Insofar as the issue concerning the mechanical elements of the structure is concerned here, it is your opinion that that is immaterial? A. Yes, and is not intended to show any operation different than what is in the actual structure.

Q. Have these drawings been colored with the same color scheme as used on your various charts which have been previously discussed, that is, a violet color for the frame member, a yellow color for the fixed part, a green color for the pivoted shank attaching member, a blue color for the pivot pin, an orange color for the spring means, and a brown color for the spring lock and washer and nut? A. Yes, and a pink color for the shank member.

Q. And have you in addition on these drawings shown red lines to represent the corresponding contacting faces similar to the red lines or surfaces which you have shown on the 798 patent structure? A. Yes, red lines and red surfaces.

Mr. Morris: We offer those exhibits.

[882] The Court: They will be admitted, subject to the conditions previously stated.

(Defendants' Exhibits 1-A and 1-B were received in evidence.)

Mr. Morris: You may cross-examine.

Re-Cross-Examination by Mr. Gold.

Q. Mr. Fishleigh, in regard to the part of the action that you read from the file wrapper of the Rolf application, the examiner stated that it would not require invention to reverse the position of the member 12 of the Graham 798 patent, is that right? A. Well, frankly, I think it is right, but I don't have that paragraph in mind. I haven't memorized it, I don't have a copy of it, but I think you are right. (Document handed to witness.)

That is correct.

Q. Mr. Fishleigh, what the examiner actually said was that it would not be invention for Rolf, who made this Glencoe device, to invert or to reverse the position of the structure of the 798 as taught by the 811 patent to make it the same relative position as the 811, isn't that what

he said? A. Well, what he said was it wouldn't be invention to reverse the position of the member 12 so as to put it [883] on the lower side of the tool shank, as was done in 811. He didn't—I don't construe that to say do it in view of that, but it wouldn't be invention to do it, and when so doing you would have it similar to 811.

Q. In other words, since it already has a position in the 811 that was similar to the Glencoe, Glencoe then coming along here in view of this prior 798 patent didn't have any—the examiner said it would not require invention to arrange this structure as in Glencoe, in view of 811? A. That isn't what he said, at least. What he said was it wouldn't require invention to turn 798 upside down.

Q. As is the member 63 in the 811? A. That is right.

The Court: Of course he was speaking in regard to the Rolf patent?

Mr. Gold: Yes, sir. The Glencoe structure, sir, that application in this action was made after the 798 patent had been issued, and the 798 was then cited and—

The Court: That is what the Court understands.

Q. (By Mr. Gold) So the examiner didn't say anything about reversing the Glencoe structure, did he? A. No. He said reverse the 798. The implication of course is there.

Q. To reverse it to provide the position shown in 811? That [884] is what the examiner said, wasn't it? A. Well, he said that if you did reverse it, which would not require invention, it would then be in the position shown in 811.

Q. Now, you have made an alteration of the Glencoe structure and that alteration that you have made to invert this shank and plate was in view of having the Graham 798 patent before you, wasn't it? A. Well, I don't know just what you mean by that. I was aware of the 798 before I made that change, but it was done to show what would happen if you did turn them upside down.

Q. Turn it upside down so you would be then making the Graham 798? A. Well, if you did nothing more than turn it upside down you would have the same thing that 798 showed except for the longitudinally extending contacting faces, which are emphasized sometimes throughout the claims.

Q. And your teaching that you found for that inversion was in the Graham 798 patent? A. Well, I would say that was found in rather simple mechanics. As the Patent Office indicated, it was no great trick to turn it from one way to the other and no great trick to turn it from the other way to the first way.

[885] Q. No trick to turn it over when you had another patent showing the reverse arrangement? A. No trick. Period.

Q. That is your opinion, that it would be no trick, period? A. That is my opinion and it agrees I believe wholeheartedly with what apparently was the opinion of the Patent Office examiner.

Q. I believe the examiner's action speaks for itself. I won't go any further with it. You made the statement, I believe, that the 100 series—if you had testified that the 100 series device would work or would operate without the plate and bolts at the rear end, that that was in error; you then stated it would not operate without the plate and bolts, is that right? A. Not satisfactorily, no, sir.

Q. In answer to Mr. Morris's question did you also add the words "not satisfactory"? A. I don't remember the exact wording. I believe that I said something to the effect that not under the conditions for which those devices were intended to be used.

Q. And if the 100 series would not operate satisfactorily without the plate and bolt, would the 650 series operate satisfactorily without the bar across the rear of the fixed member that goes under the shank? [886] A. No, sir.

Q. Then those portions under the shank in both of the Deere structures, the 100 series and the 650 series, are essential to satisfactory operation? A. I believe they are, yes, sir.

Q. You were asked some questions regarding the Carter disclosure. Do I understand from your testimony that you would change the Carter drawings in order for the member "G" to rock? A. I don't think I say I would change the drawings. I simply say that I don't think the Carter drawings are consistent throughout and good drawings. They don't show the operation as suggested in the degree of accuracy that I would like or that I think they

would be made today. But even today, I find patent draftsmen today who make rather absurd mistakes and I think this is one, and not too surprising in 1880.

Q. In taking the drawings as they were shown, that member "G" wouldn't rock very well, would it? A. Well, if I interpreted it in one way I think I could interpret the drawing so that it wouldn't rock in the way that it is quite evidently intended to. But without a great deal of difficulty I can interpret it or make allowance for the draftsman's error and make it consistent so it would rock. [887] Q. Then you are able to look at these drawings and interpret them and understand the inherent operation without any specifications at all? The drawing would be sufficient to show you that? A. Now, are you talking about the Carter drawing?

Q. Yes. A. No. I am saying that the drawing itself could be—if you just had that you might have some difficulty seeing how the thing operated. But where you have a pivot pin and a structure which clearly to function should operate and you find, for instance, that there is a difference really between crosshatching and not crosshatching a certain portion, that that makes a difference between operative and inoperative, I believe that you will normally construe the drawings to provide the operative rather than the inoperative. But there is that question up there. It isn't shown accurately.

Q. And it isn't necessary for Carter to show you every position that the shank could be in for you to understand the inherent action of the parts, is it? A. Not every position, no.

Q. In other words, you as an engineer should be able to recognize some inherent movements of the parts that actually take place in the operation of the structure shown in the drawing? [888] A. If they are natural and inherent operations.

Q. I believe you mentioned that you could very readily tell from drawings the structure and in some instances a mere rectangle was used to designate some part. But you wouldn't be able to tell what that rectangle meant without some specification or description, would you? A. That is correct, that is, in the case of diagrammatic showing

there would be some indication, but quite frequently quite brief, to the effect that the rectangle represented thus or so, might even say represented a spring or a gear or something.

Q. I believe you were asked if there was anything in the Graham 798 patent to indicate it was a plow and not a harrow or cultivator, is that correct? A. I think it was something to the effect of whether it was restricted to that, was it not?

Q. Then your answer was relative to whether or not it was restricted and not to whether or not it was relating to a plow, not a harrow? A. Well, it mentions a plow, relates to a plow of a type including ground conditioning tools.

Q. In its very title it refers to a plow, doesn't it? A. Yes.

Q. And there are other places in the specification it refers to plowing, doesn't it? [889] A. That is correct.

Q. When a piece of steel is bent beyond its elastic limits so it takes a set, does it take as much or more force to straighten that piece of steel back out than it did to bend it in the first place? A. I don't believe I can tell you, give you a general answer to that, sir.

Q. You have never seen demonstrations as to bending of steel under certain forces and attempts to straighten it back out? A. I have, but I can't recall any specific relationship as between the two.

Q. You were asked some questions relative to the shank, as to which portion of the shank had the greater flexibility. What was your answer on that? A. I said that as the shank is fixed and assembled that the greater flexibility is in the curved portion.

Q. Not in the straight portion? A. No.

Q. When you bend something beyond its elastic limit, do you put stress into the structure of the steel? A. Depending on the circumstances under which it is bent, yes. If it is a cold bending it would tend to do that. If it is a hot bending it might not, wouldn't.

Q. If you did it by heat then there might not be any stress? [890] A. That is correct, or if it was bent in either condition, hot condition.

Q. Of course you don't know whether these shanks have been cold or hot, do you? A. I don't happen to know.

Q. Some springs, coil springs, are rolled or coiled cold, but they get pretty hot when they are being coiled, don't they? Have you seen that operation? A. Well, and I believe they are heat treated as well.

Q. There are some cases where in the coiling of them the heat of coiling is such that they don't even bother about heat treating, do they? A. I don't happen to know of that specific situation, but I wouldn't necessarily question it. It is possible, though not—I wouldn't expect it to be normally too accurate.

Q. Have you run tests on the amount of force that is required to bend a curved portion of a shank as compared to bending of a straight portion of the shank? A. Of the same length? Not to make that particular comparison, no.

Q. Then you don't actually know where the greater flexibility would be in the shank, in the straight portion or the curved portion, do you? A. Oh, yes. That isn't what you asked me. I have run [891] tests which indicate that as assembled the amount of bending that takes place—very substantial bending takes place under heavy forces in the curved part of the shank and very little between—almost negligible between the clamping bolt and clamping lugs or loops.

Q. In this bending are you talking about the amount of bending per unit of length? A. Well, I would be talking about both the amount of bending in unit of length and total length.

Q. Now we are again referring to a terminology of bending in the part that you have just been stating— A. Well, I should again—I followed along with you without making that distinction. We perhaps should both be talking then more about the matter of flexing, of resilient bending, below the elastic limit. At least that is what my tests were.

Q. In that case that is what you were referring to, not a bending that could cause a set? A. That is right.

Q. Actually in some of your testimony on cross-examination you were referring to bending, as you specifi-

cally stated, had it not been beyond the elastic limit, did you not? A. I don't recall that. I followed along with you without making any deliberate attempt to distinguish at that time [892] until the question came up later.

Q. In most instances where we have talked about any bending we have been keeping it a flexing that would be below the elastic limits? A. Well, I think so in most cases, although that might not be—I don't think that could be said to be a hundred percent so. I think we did talk about some bending beyond the elastic limit.

Q. I believe you told the Court that the stress throughout the length of the shank would be the same regardless of whether the shank was above or below the plate, the hinged member in these devices, is that correct? A. I don't recall that.

* * *

[893] Q. (By Mr. Gold) So we can be more specific, Mr. Fishleigh, in the Graham structure the pin in the plate is above the shank, is it not? A. That is right.

Q. And that is also true of the defendants' 100 series? A. That is right.

Q. And the defendants' 650 series? A. That is right.

Q. And in the Glencoe structure both the pin and the plate are below the shank? A. Yes.

Q. So in the Court's question earlier we were considering the pin or the plate member or both; would your answer be that the stress throughout the length of the shank would be the same whether the shank is above the plate, as in Glencoe, or below the plate, as in the defendants' structure? A. I believe substantially so, yes.

Q. You think they would be the same? A. Substantially. Now, differing in detail as to any particular change in dimensions or something, but generally speaking I would say yes.

Q. Now, when you are referring to stress are you talking about unit stress or distribution stress or does it make any difference? [894] A. Well, I believe you could talk practically either way and the same result would be substantially true.

Q. And would that also be true if we would change the word stress to flex? A. Would you want to change it to strain?

Q. No, let's change it to flex. A. Well, what do you mean by flex in a case of that kind?

Q. Would the flexing— A. The amount of movement.

Q. Yes, sir. A. Or the position of them.

Q. Yes, sir, where we have been formerly using the word bend, which would be a bend below the elastic limit, would the bend in the shank be the same throughout its length, regardless of whether or not the shank is above the plate or below the plate? A. Substantially I believe it would, yes.

Q. Now, you say substantially. I think that there have been times when the word substantially might be rather ambiguous. Can you be more definite? A. Well, for instance, we are talking about two structures in which the configuration and the clamping arrangements are somewhat different, and insofar as the length of the part clamped and all is concerned it might make some—what I would call slight difference. It is to avoid [895] being pinned down to something of that sort that I am using the word substantially. But it would be, as I visualize it, a tendency at least to come out and either straighten out or possibly curve a little bit, depending upon the amount of the load and the resistance.

Q. Now, Mr. Fishleigh, let's not dream up difficulties in regard to this question. I think the question is rather simple. It is a question of whether or not it would make any difference as to whether the plate is above or below the shank, and you have rigged up a structure here in which you turned over the Glencoe structure, you put the shank below. Now, the normal position, as shown in the drawing with the shank above the plate member, that is the design structure? A. Yes. In that case I would say they would be the same.

Q. The flexing would be the same regardless of the position of the shank relative to the plate, either above or below? A. Yes.

Q. In other words, as I understand your testimony—let's not have any mistake about it—your testimony is that

the bending or flexing where it is below the elastic limit in the operation of the Glencoe structure, as shown in the drawing—as shown in Defendants' Exhibit 11, or at the right-hand side of Defendants' Exhibit 28, that [896] that would be the same as it would be if that structure was reconstructed as you have done here with this Glencoe device where the shank is below the plate? A. Yes, sir.

Q. Mr. Fishleigh, you were drawing on some exhibits to indicate how these shanks would bend or the flexing of the shank in operation. Would you please repeat that?

Mr. Morris: Your Honor, I don't see any point of this repetition of previous testimony. If this lawyer has some questions he wants to ask, all right, but to ask the witness to go back and repeat his testimony is just wasting everybody's time.

The Court: I don't think it would serve any purpose to ask him for repetitious testimony in the case.

Mr. Gold: It won't be repetition, Your Honor. I want him to show how he would do it and make a line around to show how this would bend. Will you do that?

A. Yes. In the 798 for instance it would be straight across and—

Q. (By Mr. Gold) I believe that you started the other way. A. Oh, I started here (indicating) and came up with sort of an S-curve and then across underneath there and [897] possibly at a very—in others than the 798, that is, where a specific—

Q. That is sufficient. Wait a minute now, Mr. Fishleigh. You drew this line up to show the curvature, then you came down in a sharper curve right here below or behind the hinged member, did you not? A. Well, that may be rough. I don't think that perhaps is quite the way it would come. That is just as the rough part of it coming here, but I don't think that that is what you would necessarily get, a sharp bend at that point.

Q. Now, are you saying that you would have a uniform bend throughout this curved part and on up to the rear of the hinge member? A. No, I think it would come out, coming from the other end, come out here and tend to come up above that and come down to some such position as this (indicating).

Q. Very little bending in the curved part of the shank? A. Bending from what it is now?

Q. Yes, sir. A. Oh, I think it would bend in that part as well as in the other parts; at least where I have seen them they seem to bend that way.

Q. I believe this is a little larger here in the 811 structure. In other words, your testimony would be then [898] that this entire curved part is going to tend to straighten out and have a larger radius? A. I think it would tend to, yes.

Q. And that would be the same amount of bending that you would have in the other area, that you would have immediately behind the broken plate? A. Oh, I can't say as to the detail of it. I haven't made such a sketch. I have seen them that way but I haven't measured them to measure exactly the curvature.

Q. Then your testimony here has been merely theory as to how much would be bent—how much the shank would bend in the curved part and how much it would bend in the part immediately behind the— A. No, my drawings have been at best diagrammatic and not intended to be—well—numerical in that respect.

Q. Now, I believe you also stated that when the force is up that there was a restraining force down on the shanks in the 811, 798, Glencoe; didn't you make that statement? A. I think that is generally true. There is a force against the pivot pin or fulcrum which resists movement.

Q. Now of course in all these forces that we have been talking about all along it was understood that we were referring, in your cross-examination, to a particular force and certainly those forces would be resisted in [899] some way in order to hold this structure in an operative arrangement, whether it was tipping to some degree or whether it was back up to its normal position, isn't that right? A. Yes, I think so.

Q. So then when we were talking about the direction of the forces it was not misleading or was not understood by you that we were trying to indicate there were no other forces to resist that, were we? In other words, the upward force on the shank at the rear of the hinge member certainly is always going to be resisted by something,

otherwise the whole shank would go up in the air, wouldn't it? A. Oh, I would expect so, yes.

Q. And the forces we talked about being in a direction toward the face engaged by the shank in the 798 structure, was that one force that was acting on the shank tending to cause it to move up at the rear? A. Well, that is what I understood, at least.

Q. Now, of course we do have a spring force that is applied to the front of the shank in the Graham 798 structure? A. That is right, which tends to or permits the device to move so that any diagram that I was making roughly was not at the moment taking account of the fact that the hinged member and that portion of the shank would shift [900] under the action of the forces too.

Q. Now of course the defendants' structures also have springs that tend to return them to their normal positions and they are acting in such a way that there is a force on the forward end of the shank? A. That is right.

The Court: Gentlemen, * * * we will be in recess until 10 a.m. tomorrow.

(Adjournment.)

---

[901] MORNING SESSION, THURSDAY, MAY 10, 1962

CLARENCE T. FISHLEIGH resumed the stand and testified further as follows:

Mr. Gold: I have no more questions of Mr. Fishleigh.

Re-Direct Examination by Mr. Morris.

Q. Just one very brief item. Mr. Fishleigh, concerning the resiliency and bending or flex of the spring steel shank in these structures, particularly in the Deere 100 and the Deere 650, have you conducted some tests to attempt to make some measurements of some of those flexes? A. Yes, sir, I have.

Q. I would like to hand you four photographs which we have identified as Defendants' Exhibits 52-A, B, C and D, and ask you please to state what each of those are, in order.

Mr. Fishburn, I am sorry, I don't have any extra sets of those. We will have to have some more prints made for you. A. Well, all of these four show the Deere 100 series clamp on a test stand, where force was applied to the lower end of the shank to see what deflection there was in the shank itself, what deflection there was in that [902] portion of the shank up in the clamp and—

Mr. Morris: I haven't offered them yet, Mr. Gold.

Mr. Gold: I just want to see them.

Q. (By Mr. Morris) Would you describe just very briefly the physical setup that was used to apply the pressure to the shank, and so on. A. Yes. A bar was mounted between two uprights to simulate the cross frame of a plow. The clamp was mounted upon that transverse member. Then a hydraulic cylinder and connecting means were attached to the lower end of the shank and force applied in increments of 500 pounds and measurements of the deflection or change, if any, of that portion of the shank in the clamp relative to the hinged member itself. A series of dial indicators were set up, attached to the hinge member and registering the relative position of the shank member with respect to the hinged member.

Q. All right. Refer, please, to the Exhibit 52-A and state what that particular exhibit reflects, and raise it up so the Court can see it as you explain. A. 52-A shows the position of the setup and particularly the contour of the shank before any pressure was applied, before any force was applied.

Q. As it appears in that photograph, is the shank in its [903] normal unstressed contour? A. Yes, sir.

Q. And is the clamp itself under any pressure in that first photograph? A. Nothing other than the weight of the shank itself.

Q. Then 52-B, and what does it show, please? A. It shows a front view of the clamp, showing the condition of the coil springs and the relationship of the hinged member to the fixed member.

Q. In that particular photograph had any pressure yet been applied to the shank element? A. No. That is comparable—

The Court: That is the shank here (indicating)?

A. Yes. That is comparable to 52-A, both taken under the same conditions, but one from the side and one from the front of the device.

Q. (By Mr. Morris) All right. Then pass to 52-C. A. 52-C shows the same clamp and the same setup with 4,000 pounds applied of pressure, force or pull, at the bottom end of the shank.

Q. Does that photograph show a deflection of the shank member itself? A. Yes, what I would call a very substantial deflection.

Q. As shown in that photograph, approximately what was the distance or amount of the flection of the shank at [904] its lower end? A. In the neighborhood of ten inches.

Q. And I believe you said that was with 4,000 pounds of pressure applied to the shank by the hydraulic cylinder? A. That is correct.

Q. Pass to Exhibit 52-D, please. What is it? A. Another front view comparable, as far as the relationship is concerned, with 52-B, and shows the condition and the relationship of the shank and the hinged member and the compression of the coil springs under that same load of 4,000 pounds.

Q. Does that particular photograph, the fourth one, 52-D, reflect that the springs have been totally compressed? A. Yes, it does, and in the course of the test it was evident that they were fully compressed at somewhat less load than the 4,000 pounds.

Q. All right, sir. Now then, with the varying tests under varying loads, what was the maximum amount of deflection of the shank which you were able to measure in its forward end between the pivot point and the point of spring attachment? A. With the 100 series clamp and with the bolts tightened as they should be in normal operation, the maximum movement of the shank away from the pivot member was four thousandths of an inch, four one-thousandths [905] of an inch.

Q. Four one-thousandths of an inch? A. Yes, sir.

Q. And would that be at approximately the same time that the tool end of the shank was deflected approximately

ten inches as indicated in the third of the photographs there? A. That is correct.

Q. Now then, with the bolts loosened in the 100 clamp, that is, the forward fastening bolt which attaches the shank to the hinge member at the forward end, and with the fastening bolts at the rear which hold the shank to the hinge member at the rear, with those also loosened so that they were not in an intended operative condition, what was the maximum amount of flex in the forward end of the shank which you were able to demonstrate? A. Thirty-two thousandths of an inch.

Q. Now then, were similar tests made for the 650 clamp to determine the possible flex of the forward end of the shank away from the hinge member in that clamp? A. Yes.

Q. And what was the maximum demonstrable flex in the forward end of that shank away from the hinge member? A. At no time, up to and including the application of 4,000 pounds, was there any movement of the shank away [906] from the hinged member.

Mr. Morris: You may cross-examine.

Re-Cross-Examination by Mr. Gold.

Q. Mr. Fishleigh, were any of the plaintiffs' personnel present during the making of these tests? A. No, sir.

Q. You mentioned some bolts on the 100 series. Were those bolts tightened before the test? A. Yes.

Q. And the pictures you have produced, Defendants' Exhibit 52-A and Defendants' Exhibit 52-C, will you tell us exactly what differences—what was done, what things were moved, between those two pictures? A. The only thing that was moved was that hydraulic pressure or force was applied through the hydraulic cylinders so as to pull on the bottom end of the shank, the hydraulic cylinder having been located in the first instance slightly above the bottom end of the shank.

Q. The first picture was taken to show what you said was the unstressed position, then the only thing that was done was to apply pressure to the cylinder and take the second picture? A. Yes. That is, in the meantime we

had stepped up increments of 500 pounds and had made readings of the [907] dial indicators at those various increments of pressure.

Q. Nothing else was moved other than that? A. Not of the main equipment.

Q. On the stool you have an indicator of some type. It shows a dial or face in Defendants' Exhibit 52-A. In Defendants' Exhibit 52-C that is turned around, isn't it? A. That is correct.

Q. At least it is not the same view, is it? A. Well, no, that particular recording instrument, on the basis of which the pressure was applied, had been moved slightly.

Q. So there were other things done to it between these pictures than what you mentioned awhile ago? A. Not as far as the clamp and the shank and the power application. As far as the other materials, perhaps wrenches are moved and other things, or the recording instrument could very well have been moved, and apparently was, so that it could be read more readily. But nothing that affected the operation.

Q. Tell us again the location of this dial indicator that you mentioned. A. Well, there were a series of dial indicators which were fastened to the hinged member by means of a series of—

Q. Show us the series of dial indicators in these pictures, [908] Mr. Fishleigh. A. There is only one of them that shows clearly in these pictures and that is at the front end, but there were others arranged—

Q. That is the only ones shown in these pictures? A. In these two pictures.

Q. These pictures don't adequately show the test structure then, do they? A. They don't show the complete details of it. They show the condition of the coil springs and the condition of the shank.

Q. And the dial indicator that is positioned or shown in these pictures engages the forward end of the shank? A. That particular one does, yes, sir.

Q. I have placed Defendants' Exhibit 27 on the easel. When we refer to the front end of the shank where that dial indicator was located, that would be at the point

I am placing my finger, in other words, just ahead of the bolt numbered 13 that secures the front of the shank to the hinge plate? A. That is correct.

Q. And measurement at that point wouldn't show any deflection as to what would occur in the portion between the bolt and its plate at the back of the hinge member, would it? [909] A. No. That particular indicator would show only what occurred at that point.

The Court: Is that where the flexion indicator was located, the front part?

Mr. Morris: Your Honor, we can bring it out clearly. I believe he has already said that there were several indicators, and if Mr. Gold doesn't bring it out here I will bring it out. There were indicators located at intermediate points all along, and between the point of forward attachment and at the rear, and measurements were taken at several different points between those two points, deflection measurements were taken at those different points.

The Court: The deflection wouldn't be the same, would it?

Mr. Morris: It will not be the same, and I asked him about the maximum. We will also bring out, if anybody wants it, the maximum was approximately at the center point. The others as they grade toward the two ends become zero, virtually so.

Q. This deflection that you found in the 100 series was a deflection bowing the shank downwardly away from the plate? A. To the extent of four thousandths of an inch, yes, sir.

Q. Will you answer my question, please? It was downwardly [910] away from the shank? A. Yes, to that extent.

Q. And the deflection that you mentioned in the 650 series, it also was a deflection downwardly away from the shank? A. No, I said there was no deflection away from the shank in the 650 series.

Q. No deflection whatsoever? A. Not away from the shank.

Q. Away from the plate member. I am sorry if I said shank. A. Oh, if you did—anyway, I meant from the plate member, as no doubt you did.

Q. To be clear, your testimony is that in the 650 series there is no deflection of the shank away from the plate member? A. No movement of the shank away from the plate member when the force is applied.

Q. Now referring to Defendants' Exhibit 52-B, tell us the mounting of the dial in that structure. A. The dial was mounted through a series of plates and brackets which I can't at the moment describe in detail, but to the hinged member, so that it was carried by the hinged member and with its point upon the shank, and that was checked to see if there was any permanent change, because it was run from zero to 4,000 pounds at [911] 500-pound increments, then returned to zero and checked and did check out to be—all of the dial indicators came back to zero, and then ran through once more at 1,000 increments just as an additional check, to see that the dials—that there was not any looseness or difficulty in that way.

Q. But you are not able to tell us in detail the mounting of that dial? A. I can't at this moment. I helped in setting them up and seeing them set up, was there when they were set up, but I don't have in mind and didn't make any notes or diagram as to the exact arrangement of clamps and plates which carried that connection out.

Q. You do have duplicates of these pictures, do you not? A. I have a set of my own, yes, sir.

Q. Will you explain the reason for the deflection that you found in the shank in the 100 series clamp. A. Yes. There is a fulcrum at the rear end of the clamp and—

Q. That would be this point I am putting my finger on, the dark green portion right above the shank at the rear? A. That is right. There is a fulcrum or resistance at that point, there is a load out behind it and another load, or really resistance, but another load at the point of [912] the bolt connection in the one instance and at the point of the spring rod connection in the other instance, and whenever you have that type of thing there may be a very minute—or under other circumstances, if it is thin enough and differently clamped, might be substantial, but in this structure, because of the nature of the forces, it was a very, very slight deflection.

Q. As a matter of fact, it is simply physics, is it not, that you are putting a stress on a member, causing it to tend to move about a fulcrum, like a beam about a fulcrum, and you have a part on the other side that is an extension of that beam with a connection at the other end so that when you are applying stress and the resistance naturally causes the shank here, the part under the plate, to bow downward, is that right? A. Well, very little. It is more like the mounting, comes closer to being what we would have in the mounting of a cantilever beam where, if properly mounted, it is mounted to avoid any appreciable deflection, and that is what happens here.

Q. And you did find some deflection, you will admit that there was some deflection downwardly away from the plate member? A. Four thousandths of an inch in the one instance, none in the other instance.

[913] Q. Now, let's look at the Defendants' Exhibit 26 of the 650 series. There is an upward force on the shank rearwardly of the hinge member in operation, isn't there, and that would be true in your test? A. Yes.

Q. And the rear of the plate member right above the shank would be a fulcrum member just like you testified relative to the 100 series, would it not? A. After the load had been applied to it, yes.

Q. So the forces that would be applied here would be upwardly on this shank so as to tend to bend it around its fulcrum, is that right? A. It would tend to.

Q. And you do have a resistance at the forward end with a bolt connecting the shank to the plate just like we have in the 100 series, don't you? A. Yes.

Q. So the factors of the fulcrum and resistance at the forward end of the shank and this bolt is the same in the 100 series as in the 650 series? A. In general, yes, differing in detail, but in general, yes.

Q. As to the fulcrum, the forces and this bolt at the forward end, they are identical, aren't they? A. After any clearances have been taken up, yes.

[914] Q. Do you have some clearances between the shank and the hinge plate when the force is applied to it? A. Yes.

Q. Then the shank wouldn't be pushed up against that hinge member in response to those forces? A. Wait a minute. What I said was that before the forces are applied there is clearance there.

Q. Before the forces are applied? A. Oh, yes. I pointed that out several days ago.

Q. So then you measured the position of the shank before the forces were applied and then you applied the forces up to 4,000 pounds and took up that clearance that you mentioned? A. Yes, it naturally did take it up, yes.

Q. And didn't find any downward deflection in view of the clearance that you had taken up? A. That is correct.

Q. Of course you could have arranged a quarter of an inch of clearance here and then you would need a quarter inch of deflection in order to find the zero reading that you found, wouldn't you? A. Well, if the structure was built differently than it is, no doubt the results might be somewhat different. I was simply measuring the structure as it is accused here and as it is produced.

[915] Q. Did you work the cylinder many times to see what would happen in actual operation after a period of hours of plowing? A. Well, we didn't work it all day, that is, just forward and back. We ran a series of tests on this one, a number, I would say we applied it and took it off, oh, probably about 12 times, but naturally didn't attempt or at least didn't attempt to conduct what might be called a live test in this particular instance.

Q. And you didn't work it long enough so you could see if the bolts came loose? A. No. I had seen that out in the field. I saw one which had been in operation for two years and was quite tight, very tight, in fact, still.

Q. At the particular time you saw it? A. Yes. As I came to it, and out in the farmer's yard, he had no idea I was coming—there was the machine.

Q. You had a connection between the lower end of the shank and the forward portion of the clamp? A. Yes. Wait a minute. I guess I missed—I thought you said something different. May I have that again. (Question read.)

A. No, not that I—if I understand you correctly, no. I frankly don't quite understand your question.

Q. There is a member extending upwardly and forwardly from [916] the lower end of the shank. Isn't it connected to the clamp? A. If you will point out what you are talking about—I don't—

The Court: I don't follow it either.

Mr. Gold: Would Your Honor care to look at the pictures?

A. Will you point out here what you mean?

Q. (By Mr. Gold) You can't see any connection in the pictures that you are looking at? A. Not that answers the description that you are suggesting.

Q. Look at Defendants' Exhibit 52-B and you have the 52-A also. Well, let's look at 52-C. There is a member extending forwardly from the lower end of the shank, is there not, and that member also shows in Defendants' Exhibit 52-B as a rod that extends upwardly from a bolt or something on the lower end of the shank? A. No, you are completely misreading the pictures. The member which extends forwardly from the shank stops at about the stool leg, as shown in this picture. The rod which you are talking about and which in the picture does overlap is some—oh, many inches forward of it, and it is part of the member, part of the clamping arrangement which held the dial indicators in place. No connection—

[917] Q. That picture you are referring to is Defendants' Exhibit 52-B? A. That is correct. No connection between what you are pointing to as a vertical member and the member shown in 52-C or, for that matter, in 52-A at all. They are quite a number of inches apart.

Q. You also have in Defendants' Exhibit 52-B a horizontal bar extending out from some brace means at the side of the structure? A. No. That again, the brace means is on the upright supports and this bar which goes across is part of the clamping mechanism. They simply appear to overlap in the picture but they are not in any wise connected. The clamping means for the dial indicators were removed from the supports so that they operated and did not in any wise restrict the movement of the clamp in its tilting or pivoting motion.

Q. Have you previously read anything that would suggest to you that with the bolts loose you should find a maximum deflection of thirty-two thousandths of an inch?

* * *

[918] A. I have not read anything of that sort, no.

* * *

That is all.

Re-Direct Examination by Mr. Morris.

Q. Mr. Fishleigh, in conducting the tests on both the 100 and the 650, which was just discussed here, did you set measuring dials to take measurements of the deflection of the shank at various points between the point of forward attachment and the point of rear attachment or rear pivot?

Mr. Gold: Your Honor, I believe the question is very leading. I think that the witness should testify.

Q. (By Mr. Morris) All right, let's put it the other way around. Mr. Fishleigh, where did you put your measuring dials on these shanks to measure the various deflections? A. There was one forwardly of the bolts, one just rearwardly of the clamp and several in between.

[919] Q. And was that true on both the 100 and 650, that is, several different dials? A. Yes.

Q. And where in the 100 did you find—approximately where did you find the maximum point, maximum amount of deflection of the shank away from the hinge member? A. Approximately in the center between the bolt marked 13 on this drawing and the strap member marked 11.

Q. Now then, as to 650, after the original tolerance or slackness was taken up and some pressure put on the shank, did there from that point forward ever at any time appear to be any measurable deflection of the shank away from the hinge member at any point? A. No.

Mr. Morris: That is all.

Re-Cross-Examination by Mr. Gold.

Q. Mr. Fishleigh, if the bolts on the 100 series would come loose then I understand from your testimony that it would deflect more? A. Well, it might, yes, under certain conditions.

Q. Now, on your re-direct I believe you said that after you had pushed the shank up against the rear end of the plate member, that from that point you had no deflection whatsoever in this part of the shank under [920] the plate? A. I don't think I said just that. I said no deflection away from the hinged member, was what I was asked.

Q. You did have the flection in the shank? A. Some slight movement of it, yes.

Mr. Gold: That is all.

Mr. Morris: No further questions.

(Witness excused.)

Mr. Fishburn: In view of this witness's testimony regarding the Cockshutt device and these exhibits, plaintiff would like to introduce in evidence as Plaintiffs' Exhibit Q photostatic copy taken from the record in the Cockshutt case, No. 16,955, starting on page 16 through page 27, which consists of Judge Dooley's opinion, letter opinion in the District Court, findings of fact, conclusions of law and judgment, with respect to the validity phase of the Graham patent in suit.

The Court: Northern District of Texas?

Mr. Fishburn: Yes, Northern District of Texas.

Mr. Morris: Do you want to introduce also his opinion in the first case, finding no invention in that patent? You don't want to introduce that, I assume?

Mr. Fishburn: I am not going to introduce it.

[921] Mr. Morris: If you want to introduce this I will have no objection on the condition that his letter opinion in the first Jeoffroy case, in which he first held the patent invalid, is part of the record in the case, otherwise I will object to that.

Mr. Fishburn: Won't the reported opinion in the Court of Appeals take care of that?

Mr. Morris: I don't know whether it will or not. I rather doubt it.

Mr. Fishburn: I don't object.

Mr. Morris: I have no objection then to your introduction of your proposed exhibit, Plaintiffs' Exhibit Q.

* * *

[922] GEORGE DWIGHT HUNTER, previously duly sworn, was called as a witness on behalf of the defendants, and testified as follows:

Direct Examination by Mr. Morris.

Q. Mr. Hunter, sometime earlier in the case here some questions have been asked concerning the function of the rear web or bar member of the Deere 650 main clamp. Will you please tell us what the purposes of that particular bar are in the clamp. A. The bar in the lower rear corner of the 650 clamp has two primary functions. One is to give lateral support to the side members of the clamp so that they may resist the side loads imposed in the side members by the standard, provide mutual support between the two side bars, side plates. The second function is to support the standard during rebound.

Q. Now then, in the working drawings of this 650 clamp, blueprint of which is in evidence here as Defendants' Exhibit 38, is there a designed clearance between the bottom side of the standard or shank and the upper surface of the web member which we have just been discussing? A. Yes. That is clearly shown in this—

Q. Will you point it out to the Court, please, Mr. Hunter.
[923] A. Design clearance is indicated between the lower surface of the standard and the upper surface of the web member in this lower left-hand corner.

The Court: This is the amount of clearance (indicating)?

A. Yes, sir, that is the amount of clearance in the home position. This is the clearance that is shown at the—

Q. As the shank pivots or rocks about its pivot point, does the clearance between the bottom surface of the shank and the upper surface of the web member open up? A. Yes, it increases.

Q. I suppose it would be recognized that the bolts are not fastened tight or there may possibly be some variations in shank thickness or hinge thickness, that it would be possible for the shank upon occasions to contact the web when in a static, unoperating position or condition, is that correct? A. Yes, that could happen.

Q. Does that factor perform any function in the device at all though? A. No. As the standard comes under load that immediately lifts up.

Q. The minute any groundworking load is placed on the plow tool, does the shank move away from whatever contact it may have with the bottom bar or web member? [924] A. Yes, that is correct.

Q. Then of course you have already stated it may contact it on a recoil or rebound action? A. That is right.

Mr. Morris: You may cross-examine.

Cross-Examination by Mr. Gold.

Q. Mr. Hunter, would you please step down here a minute. I have here Plaintiffs' Exhibit I, that is a 650 series clamp, is it not? A. Yes.

Q. And that is what you were testifying about in connection with Defendants' Exhibit 38, the drawing that you were testifying about? A. Yes.

Q. And you said there was design clearance between this bar and the shank? A. Yes.

Q. Can you move that up and down to show us that clearance?

Mr. Morris: I expect you will have to remove the spring pressure, Mr. Gold.

A. Yes, that can be moved like that (demonstrating).

Q. (By Mr. Gold) Slightly? How much? A. How much would be only an estimate. Very slight.

Q. Very slight. Insignificant? [925] A. No, I wouldn't say it was insignificant, but there was movement there.

Q. Actually there is enough clearance to allow the shank to be slipped in— A. I didn't hear you.

Q. The clearance is just enough to allow the shank to be slipped in, isn't there? A. No, that isn't its only purpose.

Mr. Gold: That is all.

(Witness excused.)

* * *

[931] The Court: Gentlemen, we will take a short recess of five minutes.

(Recess.)

[932] Mr. Morris: Your Honor, we have no further witnesses. I would like to check off and offer our exhibits at this point, please.

We will offer the following exhibits which have been heretofore identified:

Defendants' Exhibit No. 1, which is the Cockshutt spring clamp.

Defendants' Exhibit No. 1-A and 1-B, the colored drawings of the Cockshutt clamp.

Mr. Fishburn: If Your Honor please, do you want us to make any objections as we go through them?

The Court: It would probably be easier for the record if you would make your objections as he takes each one up.

Mr. Fishburn: I have already stated my objection in connection with the Cockshutt colored drawings.

The Court: Yes, and that has been noted for the record, and it has been admitted subject to being stricken after you file your briefs if I think your objection is well taken.

Mr. Fishburn: I call attention to the inaccuracy in the Exhibit 1-B, noted, I think, by the witness.

Mr. Morris: You are not saying that there [933] are any other than the one Mr. Fishleigh pointed out?

Mr. Fishburn: No other at the present time, so we have none.

Mr. Morris: Defendants' Exhibit No. 2, the Jeoffroy SC-580 spring clamp.

Defendants' Exhibit 3, the Glencoe spring clamp.

Defendants' Exhibit 3-A—

The Court: Pardon me just a minute. May we proceed on the basis that unless you make objection as he names them you are not objecting to their admission?

Mr. Fishburn: That is correct, Your Honor.

Mr. Morris: Defendants' Exhibit 3-A, which is the lug, separate lug attached to the Glencoe clamp and used for demonstration purposes.

Mr. Fishburn: Now, we object to that on the ground that it is just made up to show the shank turned over.

There has been no device made or used according to that. It was made by this witness for the purpose of use in this trial only.

The Court: Made just for demonstration purposes.

Mr. Fishburn: That is right.

Mr. Morris: No contention otherwise.

[934] Defendants' Exhibit 4, the file history of patent 798.

Defendants' Exhibit 5, the book of prior art patents.

Defendants' Exhibit 6, the Graham 811 spring clamp.

Defendants' Exhibit 8-D—maybe to make the record complete—well, these may possibly come in later. We will leave them alone for the moment.

Defendants' Exhibit 8-D, which is—

Mr. Gold: Are you skipping some?

Mr. Morris: Yes, I am skipping some which haven't been identified yet, may not be.

8-D, Claim 7 from original 798 patent application as filed.

Mr. Gold: I believe that is a copy of that that has been broken down into elements, separated into elements in the Defendants' Exhibit 8-D.

The Court: Has any language been changed in it?

Mr. Gold: The language is the same.

Mr. Morris: No change in language.

Defendants' Exhibit 11, Mr. Fishleigh's colored chart No. 1.

Defendants' Exhibit 12, colored enlargements of the Dunbar patent drawings.

Defendants' Exhibit 13, colored enlargement of the Rix patent drawings.

[935] Defendants' Exhibits 14-A, 14-B, 14-C, colored enlargements of the Graham 811 patent drawings.

Defendants' Exhibit 15, colored enlargements of the Traeger patent drawings.

Defendants' Exhibit 16, colored enlargements of the Petersen patent drawing.

Defendants' Exhibit 17, colored enlargements of Glencoe drawings.

Defendants' Exhibit 17-A, colored enlargements of Glencoe drawings, showing the plate member inverted and an additional lug attached.

Defendants' Exhibit 18, colored enlargements of Jeoffroy SC-580 drawings.

Defendants' Exhibit 19, Mr. Fishleigh's Chart 2.

Defendants' Exhibit 20—

Mr. Gold: I didn't get that last part.

Mr. Morris: Chart 2, Defendants' Exhibit 19, Mr. Fishleigh's colored chart of prior art. Chart 2.

Defendants' Exhibit 20, another of Mr. Fishleigh's colored charts with respect to prior art, being Chart No. 3.

Defendants' Exhibits 21-A, 21-B, 21-C, 21-D, colored enlargements of the Graham 798 patent drawings.

Defendants' Exhibit 22, Mr. Fishleigh's Chart [936] 11 of Graham 798 Claim 1.

Defendants' Exhibit 23, Mr. Fishleigh's Chart 12 of the Graham 798 Claim 2.

Defendants' Exhibit 24, Mr. Fishleigh's Chart 21, showing a composite of Jeoffroy SC-580 and Rix.

Defendants' Exhibit 25, Mr. Fishleigh's Chart 22, showing a composite of Graham 811, Petersen and Glencoe.

Defendants' Exhibit 26, colored drawings of the Deere 650 spring clamp.

Defendants' Exhibit 26-A, one of the Deere 650 spring clamps, here on the table.

Defendants' Exhibit 27, colored drawings of the Deere 100 spring clamp.

Defendants' Exhibit 27-A I believe has already been offered but we offer it again, the Deere 100 spring clamp, also a part here on the table.

Defendants' Exhibit 28, Mr. Fishleigh's Chart 3, showing mechanical elements of Claim 1, not found in the Deere 650 or the Deere 100 structures.

Defendants' Exhibit 29, Mr. Fishleigh's Chart 32, showing mechanical elements of the Graham 798 Claim 2, not found in Deere 100 spring clamp.

Then our numbers 30, 31, 32, 33-A and 33-B and 34-A and B have already been offered by the plaintiff. [937]

We are not making a separate offer of them. They are in the record. The same thing is true of our Exhibit 38, Defendants' Exhibit 38, Defendants' Exhibit 39.

We will omit exhibit numbered 40, there will not be any number 40.

Defendants' Exhibits 41 and 42-A through I, and 44 have all already been offered—let me take that forward; also 45-A and B and 46 have been offered by plaintiff. We will not make any additional offer. They are in the record.

There will not be an Exhibit 43, unless something else should develop.

Exhibits 47 and 48 will be omitted.

Defendants' Exhibit 49, which is one of the Graham sweeps, has also previously been offered by plaintiff.

* * *

Mr. Fishburn: I believe you marked this [938] (indicating).

* * *

Mr. Morris: Let me get my numbers straight then. That is Graham clamp made April 1962?

Mr. Fishburn: April 3rd—well, it was used—

Mr. Morris: But marked as Defendants' Exhibit 50. I will not offer it.

There will be no Exhibit 51.

We offer Defendants' Exhibits 52-A, B, C and D, the photographs of a part of the test setup, testified to by Mr. Fishleigh this morning.

Then we will offer as Defendants' Exhibit 53 Judge Dooley's letter opinion dated September 9, 1953, in civil action No. 1469 in the United States District Court for the Northern District of Texas, Amarillo Division, styled Jeoffroy Manufacturing, Inc., v. Graham.

(Defendants' Exhibit 53 was marked for identification.)

Mr. Morris: And as Defendants' Exhibit 54 a photostatic copy of Judge Dooley's letter opinion to counsel in the same case dated December 18, 1953.

(Defendants' Exhibit 54 was marked for identification.)

Mr. Morris: Defendant rests.

[939] Mr. Fishburn: Your Honor, in connection with these colored charts, I didn't want to make objection each time, but I think it is already understood that the printing and writing on those are these defendants' arguments, their position with respect to these things, and we do not agree in any way that they are true, those designations that he put on, like his statements here in the center.

The Court: Certainly the Court wouldn't place that burden on you, Mr. Fishburn.

All of the exhibits will be admitted subject to the objections.

(Defendants' Exhibits 1, 1-A, 1-B, 2, 3, 3-A, 4, 5, 6, 8-D, 11, 12, 13, 14-A, 14-B, 14-C, 15, 16, 17, 17-A, 18, 19, 20, 21-A, 21-B, 21-C, 21-D, 22, 23, 24, 25, 26, 26-A, 27, 27-A, 28, 29, 52-A, 52-B, 52-C, 52-D, 53 and 54 were so received in evidence.)

---

## PLAINTIFFS' CASE IN REBUTTAL

F. C. FENTON, recalled by plaintiffs, testified in rebuttal as follows:

Re-Direct Examination by Mr. Gold.

Q. You are the Mr. Fenton who previously testified in this case concerning the Deere clamps charged to infringe? A. Yes, sir.

[940] Q. Have you examined the copies of the patents which were set up by the defendant as a part of the prior art pertinent to the Graham patent in suit? A. Yes.

Q. Did you hear the discourse or comparison made of these reference patents with structures shown in the patent in suit and the accused structures, by Mr. Fishleigh? A. Yes.

Q. I believe there was also a Moore patent that was set up by the defendants, No. 503,288. It is in the book of prior art, Your Honor, Defendants' Exhibit 5.

The Court: Yes.

Q. (By Mr. Gold) Would you like to comment on the device shown in the Moore patent as to character of the

mounting and also as to the character of the mountings of the devices shown as prior art on Defendants' Exhibit 11? A. Yes, I would. I think the discussion of the prior art might well be made by dividing it into two classes. I call one class the antique art and the other class the modern art. Now, the characteristics of the antique art—in most instances are old, that is back a long while ago, and it is intended to be operated by horse power, which means that the tools are light, that they contact the ground only at shallow depth and [941] they are surface cultivators and harrows. That is one characteristic.

The other characteristic of this prior antique art is that in every instance these are what I call a simple pivoted shank, which is best illustrated, I think, by Moore. By a simple pivoted shank, we have a groundworking tool on one end, a spring on the other end and a pivot somewhere in between, and that is a characteristic of these prior art patents.

It is true there are variations, but in Traeger, for example, we have the groundworking tool, the spring, and a pivot. Of course this Traeger has two parts, but I am taking only the part that is really adequately shown in this discussion, the upper part is more or less intimated. I mean it isn't fully disclosed.

Take the Cobb patent. The Cobb patent has a groundworking tool, a spring and a pivot. The Dunbar patent has a similar spring, a groundworking tool and a pivot.

Now, in the Rix and the Petersen patents, there has been quite a lot of attention given by the witness, Mr. Fishleigh, to this pivoted part. But actually if you examine that you will see that the function of this extension is merely an extension of [942] the shank to contact the spring and to furnish the stop as in the case of Rix. It is the same in the Petersen patent. In fact, the Petersen patent claims nothing basically except these grooves, the shank is placed in a channel in the hinged member and the hinged member is placed in a channel in the fixed member, the purpose of which is to stop lateral motion.

So we have here simple pivoted members for light duty. Now, why haven't they been used, why hasn't this idea

been used in the modern art? When Graham was confronted with the problem and these gentlemen with Deere were confronted with the problem of designing a clamp for use in their modern tools, why did they make use of this art in designing it?

Well, there are several reasons, of course. One is under a heavy duty load it is difficult to pivot a shank so that it will be strong enough, so that the pivot will hold, and bear in mind that the shanks were pretty well standardized, that is, they didn't wish to change the size and the shape of the shanks in designing this pivot. So not only was it hard to make a pivot arm on one of these heavy shanks that will hold—

The Court: Mr. Fenton, in that connection were the shanks used on a rigid frame the same size as the shanks that are used on the—what they call the [943] vibrating pivoted frames? A. You mean this old art?

The Court: No.

A. In the new art?

The Court: Yes.

A. Well, I don't know anyone who has tried to do it actually. No one has tried to pivot these heavy shanks—

Mr. Morris: That is not the question, Mr. Fenton.

A. Then I didn't understand.

The Court: The question was, when they had just a rigid frame, were the shanks the same size as these shanks?

A. In some cases, yes. They are now the same size on rigid frames, and they are attached at the front and not pivoted. They are attached at the front end.

Q. (By Mr. Gold) I believe, to make it more clear, I think that what the Court possibly had in mind was the devices such as in the Noel patent in the prior art, which was a device similar to what Graham had to start with, with what was called the fixed clamp? A. Yes, not a pivoted clamp.

Q. Would those shanks be of similar size to what the shanks are now in these cases? A. In earlier days I think the shanks were smaller, but in [944] recent days

they are all the same size or many of them are the same size.

May I go on now?

The Court: Yes.

A. Well, my point is that it wasn't possible or practicable to make a pivoted shank to take the heavy power, the hard shocks they were called upon to do. So when Graham was confronted with this problem of designing the clamp for his plows, he hit upon the idea that—

Mr. Morris: Now, I object to what idea Mr. Graham hit upon, Your Honor, as pure speculation of this witness. He can confine it to what is disclosed by the patents, but some other things would be pure guesswork.

A. It is listed as the Graham patent No. so-and-so, and I suppose that would assume some—

The Court: I don't think it would be permissible on what his ideas were. He can testify as to what the patent shows, certainly.

A. Yes. Well, this patent 811 was the first real answer to the problem, and what are the basic things about that patent that makes it what it is and distinguishes it from these antique arts? He has—or there is, I beg your pardon, there is in this device—

Mr. Morris: In which device, Mr. Fenton?

[945] A. The Graham 811.

* * *

[946] Q. (By Mr. Gold) Will you continue now, Mr. Fenton. A. I wish to point out that the Graham 811 has a fulcrum plate. Now, the characteristic of this fulcrum plate is that it extends along the shank and takes the thrust or the pull of the shank and the two pivot together [947] more or less on this spring bolt which is fastened to the front of the shank. This carries the load in a direct line and it permits a larger movement and you can plow deep, this tool goes in 18 inches sometimes under certain conditions. The character of this device permits larger movement and supplies the resilient action that was wanted.

Q. Now you said that it carries the load in a direct line. Can you tell us what you mean by a direct line? A.

Well, along the line of the shank, from the stress applied by the plowing here, the force applied by the plowing is carried in a parallel line. I might contrast that to this one (indicating). This is a shank attaching member, it was claimed that at least. Its structure was entirely different in that it carries the load laterally to the spring, you see, and to the stop.

Q. And in the 811 structure would be longitudinally of that part of the shank and the clamp? A. Yes. Basically this then (indicating).

Q. Just a minute, Mr. Fenton. And you were referring to another structure on Defendants' Exhibit 11. I don't believe you called the name of the patent. That was the Rix patent that you were referring to, were you not? A. Yes, the Rix. So I think that we ought to keep in mind [948] the basic element of this as the new. Now, this is the only real element that has been used by the so-called modern art.

* * *

A. Well, is it permissible to state, which I would like to, that all of the modern art have used the principle embodied in 811 in one form or another?

The Court: You may give that as your opinion, yes.

A. That is my opinion. And this device is still in use in a wide way, as evidenced by, for example, the survey [949] which the Deere men made. It says in the summary that there is one of these on every farm nearly.

When I look at the antique art I don't find that member (indicating), that fulcrum plate member, in any of these. There are, it is true, elements, mechanical elements, and Mr. Fishleigh found all of the mechanical elements in some of these, he reported. But I don't find this element (indicating) in the way it is used in any of these antique structures.

The Court: Are you referring now to the fulcrum plate?

A. Yes, the fulcrum plate idea in application.

Q. (By Mr. Gold) When you say the fulcrum plate idea, do you have in mind relationship of the shank and

the plate and also the forces that are applied? A. Yes, sir, I refer to those.

Q. What are the particular characteristics of the 811 structure? Can you tell us a little more about that? A. Well, we have mentioned the main characteristics, namely, a resiliently mounted shank, attached to a frame, with a spring on the front end to provide the resilience, a fulcrum plate pivoted at the rear and provision for the rocking movement. This has been discussed many times here. I think its operation is very clear.

[950] Q. Now, let's refer more specifically to some of this art that you have classed as antique art. Refer to the Dunbar patent on Defendants' Exhibit 11, and tell us how the forces would be applied and tell us more in detail about the character of that structure. A. We have the groundworking tool, a harrow tooth, which is pivoted to a member here, attached to the fixed member of the frame, and the "C" spring, which urges the groundworking tool forward.

Q. And how are the forces applied to that structure that can cause you to characterize it as a simple pivot? A. We have, as I mentioned before, a groundworking tool, a spring, and a pivot between the two.

Q. And how are the forces applied to it as to direction? A. The forces are applied rearwardly by the soil, by the working of the soil, and that is resisted by the spring above.

Q. Would those forces be primarily longitudinally of the shank or transversely? A. Transversely very largely.

Q. Now, refer specifically to the Cobb structure and tell us the characteristics of that that would cause you to call it a simple pivot. A. The Cobb structure is almost identical in principle of operation. We have this groundworking tool, we have the [951] spring, we have the pivot between them, and the pivot is attached, of course, to the frame.

Q. Well, you also have a plate member in the Cobb structure, do you not, that is colored dark green on the exhibit, and how is the shank and the plate member, as far as forces, how do they act? A. Well, the force is applied to the plate member and transferred to the spring

at this point and causes the spring to flex in a left-hand direction.

Q. Would the force from plowing be primarily longitudinally of the shank or transversely of the shank? A. Transversely, backward here, forward on spring (indicating).

Q. Now, do I understand the same comments apply to Rix, from what you said awhile ago? A. Well, the direction of the tool is the same, downward, harrow-type tool. Here is the groundworking tool, here is the spring, here is the pivot (indicating). In order to reach the spring they have put in a little extension which is essentially an extension of the shank, the purpose of which is to give adjustment, upward and lower adjustment. These tools wear off and you have got to lower them after a while, or throw them away, and so here you have an adjustment in height.

Q. And the forces would be applied in that case [952] longitudinally or transversely of the shank? A. Transversely, for the most part.

Q. Now, refer more specifically to the Petersen structure. That is at the lower left-hand corner, I believe, and tell us how you characterize that structure. A. The Petersen structure, the tool is not disclosed, but it is probably either a harrow or a cultivating tool, a horse hoe. The shank extends through this fastening means (indicating) to an extension of the shank which is run up here to contact the spring. So as the tool moves against the ground resistance it compresses the spring.

Q. And would the principal forces on that shank be longitudinally or would it be transversely? A. Transversely. Those are all in the same relative position, as far as that is concerned.

Q. Now, will you please tell us the differences, if any, of the 798 structure from the 811 structure? I have placed on the easel Defendants' Exhibit 21-A, showing the 798 structure. It might be better if I would move it down here closer to the 811. A. I have listed six changes as indicated by—six changes in the 811 patent in order to produce the 798 patent. The first one is that the longitudinal movement between the shank and the fixed

member has been eliminated by [953] putting in a bolt here, shown in green on this drawing below. The second change is that the spring is relieved of its function, the spring bolt is relieved of its function of pulling the shank by this bolt and therefore the spring bolt is relieved from much of the wear which characterizes it in its former shape.

Q. Do I understand you to mean that in the 798 structure it is relieved from the wear and stress that was experienced in the 811 structure? A. Correct. The third point is, this wear that was evident where the shank encountered the under part of this fixed member in the groove—

Q. You are pointing to the rear part of the fixed member? A. Yes. When this device functioned this shank pushed up against the rear portion of the fixed member and that was one of the main points of wear, or is one of the main points of wear. This is eliminated—

Q. In what manner is it eliminated? A. By placing around the shank an embracing member—no, I am wrong in that case, I was mixed up there.

Q. I think that you were telling us about the wear on the rear of the fixed member, Mr. Fenton, and that that was eliminated in the 798 structure. How was it eliminated? A. It was eliminated by changing the relative position of [954] the shank and the fixed member, placing the shank below the fixed member—below the pivoted member so that the pivoted member is placed between the shank and the fixed member. No possibility of the shank contacting that lower face of the fixed member under those conditions.

Q. And the pivoted member rocks about what in the 798 structure? A. Rocks about the pivot point.

Q. That is the pivot pin? A. Pivot pin, as indicated at that point in blue, and the other point is the lateral movement of the shank was restricted by putting a stirrup around the shank at the point just below the pivot pin.

Now as a total, I say the six points which I have listed, as a total of these changes there has been achieved a more desirable flexing of the shank throughout its length in the clamp, more desirable.

Q. When you say a more desirable flexing, will you elaborate on that a little bit and tell us what you mean. A. Well, there is undoubtedly some flexing of the shank in the Graham 811 patent, but in this it is more controlled and I think perhaps a little greater in amount.

Q. We have been talking some about the 811 structure. There [955] is another item in the prior art that is shown on Defendants' Exhibit 11 and that is the Jeoffroy SC-580 structure in the upper right-hand corner. Would you comment on that structure, please. A. As I understand, that is the structure that was held to infringe in the first Graham-Jeoffroy litigation. This is shown—I don't know who made that, but that is an unreal position, because the nub is shown forward extending out of there. It never would be in that condition unless you would put a crowbar in there and flex it, push it apart, you see. I suppose the thing was drawn to make it visible rather than to show the operation.

* * *

Q. (By Mr. Gold) Now, as far as the movement of the shank or relative position of the shank and the plate member in the Jeoffroy SC-580, would you care to comment on that as compared to the 811? [956] A. Well, you could call it a Chinese copy, I guess. It is very similar.

Q. Now, we have another item of prior art on the Defendants' Exhibit 11. That is the Glencoe device. Would you point out any distinctions, if any, to the 798 structure from the Glencoe structure? A. In the Glencoe structure the hinged member is below the shank, as it was in the—it was on the opposite side of the shank from the 798 patent. It is below the shank. Outside of that difference the main mechanical elements are found in Glencoe as they are in this (indicating).

Q. Speaking of the mechanical elements, what is your opinion as to the presence of the individual mechanical elements of the 798 structure being present in the prior art? A. Well, I don't find the fulcrum idea in any of the earlier art; I characterize simple pivot members. The fulcrum is not present in any of those.

* * *

[957] Q. (By Mr. Gold) No, I will ask another question, Mr. Fenton. Now, as to the presence of the individual mechanical elements in the modern art, will you comment on that. A. Those elements that are shown here, they are all shown, I think, substantially in Glencoe and of course the mechanical elements are largely shown in the 811, may be one or two that are missing, and they are all shown in Jeoffroy SC-580.

Q. Now, as to their association or relationship, what would be your opinion as to the presence of the mechanical elements in the prior art structures? We might as well talk about the more modern art, I think. A. You are asking about the mechanical element of 798?

[958] Q. Yes, about the association and relationship of the mechanical elements of the 798 structure, what is your opinion about their presence in the modern art? A. As I have just stated, the element is pretty well present in Glencoe but the change is in the substitution or the movement of the pivoted member from below the shank, it is different in that respect.

Q. You heard Mr. Fishleigh's testimony about uniformity of bending stress and the length of the shanks in the devices we have here. Do you agree with him?

Mr. Morris: Object to that as too broad, not sufficiently pointing out the testimony about which you are inquiring, not sufficiently specific.

The Court: I think the question is sufficiently specific. That is his testimony on the test I presume—

Mr. Gold: No, sir.

Mr. Morris: That is what my objection is, Your Honor. It can be directed to the tests, it can be directed to—

The Court: If not directed to the tests the objection is sustained. That is the way I took it. I think it should be pointed out with more particularity.

Mr. Gold: Mr. Fishleigh testified relative to the shank shown here (indicating), and made some statement relative to uniformity of stress along the [959] length of the shank and I was asking Mr. Fenton as to whether or not he agreed with Mr. Fishleigh as to the uniformity of bending stress along the length of such shanks.

A. I don't now recall that he gave any such testimony, but if he did I don't agree with him. That is, do I understand uniformity of stress all along the shank?

Mr. Morris: Well, Your Honor, the defendant objects to the competence of any further testimony along this line.

The Court: The Court recalls the testimony. I don't know it is material whether he agrees with Mr. Fishleigh or not; might not be well taken since he doesn't recall Mr. Fishleigh's testimony. Of course you can ask the witness what his opinion is of the stress.

Mr. Gold: Your Honor, I think the witness misunderstood my question and was commenting about what I had said relative to Mr. Fishleigh's testimony.

Q. (By Mr. Gold) Mr. Fenton, what is your opinion regarding uniformity of bending stress in shanks under operating conditions such as the shank I just held up for you? A. Well, I am firmly of the opinion that the stress is not uniform in the shanks. It varies. There is a great deal of variation on whether rock is hit or obstruction [960] is hit, and increases toward the pivot point, I think, in general, it increases toward—as it approaches the pivot point and in most instances that was the point where the maximum stress would probably occur.

Q. Now, when you refer to a pivot point you are pointing to a pivot point in the structure shown in Defendants' Exhibit 21-A in the 798 structure? A. Yes.

Q. What is your opinion relative to the presence or absence of a high stress point in the shanks of devices in issue here, in operation? A. Well, I think these shanks are subject to terrific stresses, shock loads in actual plowing, not always but frequently. Just how those stresses will be applied to a shank is purely speculative, because you never know how a rock is going to be encountered in the soil. Sometimes the shank hits it on the edge and slides around it, sometimes it is a square portion of the rock, sometimes a round portion, and I am sure that is—the stresses in the shank will not be simplified. They are great undoubtedly.

Q. If a plow would strike a rock and tend to ride up over the rock, would there be a high stress point applied to the shank, in your opinion? A. Yes. Yes, indeed.

[961] Q. Can you tell us where that would be? A. Well, the maximum stress would probably in most instances be at this pivot point which I mentioned. But I can imagine conditions where it might be right back here at the bend in the shank. It depends on the shape of the rock and other things.

Q. Did you hear Mr. Fishleigh's testimony that there would be no difference in the flexing of the shank along the plate member when the shank is above from that which would occur when the shank was below the plate? A. Yes, I think I did hear that testimony.

Q. Can you tell us actually anything about any flexing that would occur in a structure such as the 798 device in operation? A. Reason leads me to believe that as the shank is moved upward by its contact with some immovable object, moved rearwardly and upward, there would be a high stress point just below this pivot, and that is in an upward direction at that point. Since that is resisted by this spring and the bolt, you will tend to have a flexing between them, between these two points, a downward deflection between those two points.

Q. Have you made any tests on any similar device that would tend to show that there was such flexing? A. Yes, we made a test in the Graham factory at Amarillo.

[962] Q. Can you tell us about that test? A. Well, this shank was mounted in a Jeoffroy clamp on a fixed frame, very heavy I-beam member, so it was quite rigid, and a hydraulic cylinder was placed on the point of the shank here where the tool normally bolts on, extending in a rearwardly and upwardly direction, and the hydraulic cylinder was capable of putting force on that shank. We used a dial indicator on the center at the bottom of this shank, under the face of the shank at the center point. By the way, I should say that this was a three-quarter inch shank.

The Court: I didn't follow you there, Mr. Fenton. Where did you place the dial?

A. Right here, beneath the center (indicating).

The Court: Very well.

A. That is independently mounted, of course, and so that the movement, any movement doesn't affect the

mounting, and it registers with reasonable accuracy the deflection in the shank to the thousandth of an inch. Well, we placed up to a thousand pounds on this shank and secured a deflection of approximately thirty-five thousandths of an inch or one thirty-second of an inch approximately, in this instance. Then you could release the pressure and repeat it, and we did that enough times to indicate that it was pretty reliable [963] information.

Q. Could you tell us what type of pivot member you had in that test? A. It was a Jeoffroy clamp, pivoted—

Mr. Morris: I won't quarrel with that, it is a Jeoffroy HT-5.

Mr. Fishburn: Identified as Plaintiffs' Exhibit C.

Q. (By Mr. Gold) So there will be no misunderstanding, was there more than one test, Mr. Fenton? A. Well, we made several tests at this time, but we also made a later test in—I believe in the same case, but for a different purpose. The second test we made is to try to show and we did possibly show that the set screw in this second member would be loosened by this flexing. In that test we did it 25 times.

Mr. Morris: If you like, I will also stipulate that you made some subsequent tests with the Jeoffroy HT-5-A type, the set screw and the stirrup member.

Mr. Fishburn: Identified as Plaintiffs' Exhibit D.

Mr. Gold: We had a set screw in the loop portion as shown in the Plaintiffs' Exhibit D-1.

Mr. Morris: And let's complete the stipulation, that that was also a three-quarter inch shank.

[964] Mr. Gold: Yes, sir, that was a three-quarter inch shank.

Mr. Morris: All right.

Q. (By Mr. Gold) Now, Mr. Fenton, did you finish your testimony relative to the tests? A. I might add that in my own opinion the results were about what I would expect. I think it was reasonable.

Q. What was the extent of the flexing of the shank, and can you tell me how it flexed relative to the plate of the hinge member, if it did. A. Well, it moved away, moved away from the face of the hinged member by the amount

that it flexed, more at the middle and less back at the end, of course.

Q. And the amount of that flexing was how much? A. Thirty-five thousandths of an inch maximum.

Q. Was the flexing such that in your test you could see the deflection by eye? A. Oh, very easily, yes, sir.

Q. Now, take the 798 structure and assume you were able to turn the plate and the shank over and put a pivot pin below—down below the lower part of the fixed member, so that we have the shank and plate member inverted with the shank above the plate member, what would be your opinion relative to flexing in that structure? [965] A. Do I understand that the other portion of the shank is the same relatively—in other words, the groundworking tool is in the same position?

Q. Yes, and you are to assume the forces would be applied upwardly on it. We merely invert the plate and the shank, turn it over and have the pivot below the plate member. A. In that case the tendency of the shank to flex—which is of course the same if you put the same load on it—is resisted by this plate element of the hinged member and it can flex, it just forces down against the plate member. We didn't make any tests on that. We didn't have the apparatus to make tests on that. It could be made, but we didn't do it.

Q. Now, Mr. Fenton, I have placed on the easel the Graham 798 patent drawing, Defendants' Exhibit 21-A. We have a Glencoe device, a commercial device, shown in Defendants' Exhibit 17, we have a drawing of a Glencoe structure in which the plate has been inverted, as was done here yesterday by Mr. Morris and Mr. Fishleigh. Can you tell us your opinion relative to the flexing of the shank relative to the plate member in the Glencoe structure, both the commercial and this reconstructed device? A. Where the shank is above the pivoted member and with a stirrup [966] at the rear, stress on the tool here will cause the shank to push downward on this fixed member so that essentially there is no flexing.

Q. Now, you are pointing to the drawing, Defendants' Exhibit 17? A. Yes.

Q. Now, can you tell us a little bit more the reason why you wouldn't find any flexing in the force of the shank above the plate member? A. The reason is that the forces are downward. The forces are upward on this shank at this pivot point, so on the plate member they are downward, and it just pushes against the plate surface of that hinged member.

Q. What is the function of the loop in the plate member in that particular action? A. That would restrain the shank from upward movement at that point. That and this bolt are the main members that take the whole force of the shank. It doesn't have a contact with the fixed member, so it pushes up against these two elements which in turn transmit the force to the fixed member.

Q. Now, do I understand your testimony relative to the Glencoe structure that your statement relative to the flexing would be about the same as you were stating that you would have in the Graham 798 if we inverted [967] the shank and the plate member, as I gave you the hypothetical case earlier? A. Yes, substantially the same.

Q. Now, what about the flexing of the shank in the area along the plate member in the Glencoe reconstructed device as shown in the Defendants' Exhibit 17-A? A. In this device the hinged member is placed above the shank, the stirrup extends down to a point below the shank and tends to restrain it there. A flexing in this point (indicating) will be similar to what we testified to over here, that the intervening space between the attachment and the stirrup will tend to flex downward, of course, by some amount.

Q. Mr. Fenton, I have placed on the easel drawings of the defendants' structure, the one showing the 650 series being Defendants' Exhibit 26, the one showing the 100 series being Defendants' Exhibit 27. Now, can you comment as to the relative forces that would be applied and as to the possibility of bending of the shank relative to the plate member in those structures? A. Take the 100 series first. The shank extends along the underside of the hinged member with a stirrup, a flat plate and two bolts securing it at that point. Also an attaching member here (indicating). When you get upward stress and back-

ward stress on the shank, the tool, [968] this shank ought to flex downward in the center at this point (indicating).

Q. Now, comment about the 650. In your opinion would there be any difference in the tendency to flex in the 650 over the 100? A. No, no essential difference. This end is relatively freer than this (indicating).

Q. Now when you said this end, Mr. Fenton— A. The back end, the point of maximum stress in the shank, which is in this area (indicating).

Q. That is the 650 series you are pointing to? A. And I would expect that that shank would flex downward at this point (indicating), between that pivot and the bolt attachment.

Q. Can you give us any reason why you would expect it to? A. Because it is under bending movement, bending around this point of maximum stress. This is held rigidly at this point, and the tendency is for the shank to bow downward at this point in between those two.

Q. Now, you said this is rigid at this point and I believe you were pointing to the bolt on the 650 structure on Defendants' Exhibit 26, is that right? A. Yes. The point that I mentioned being rigid is the bolt attachment at the front end.

Q. Of the 650 series? [969] A. Yes, sir.

Q. Is there any material difference in the application of forces that might tend to cause bending in the 650 series from the 100 series? A. Do you mean in this portion of the shank (indicating)?

Q. Yes, sir, the portion of the shank under the plate. A. Under the plate. Yes, I think this plate and this clamping means with both—

Q. When you say "this plate" and "this clamping means," and you are pointing to the exhibit, the record doesn't show that. Would you please tell us which one you are pointing to each time. A. The 100 series, the plate at the rear with the two bolts can be clamped up very tight, and it might have an influence on the flexing.

Q. Would that have a tendency to increase or decrease the flexing, the extent of flexing? A. Actually it would have a tendency to decrease it at that point.

Q. Mr. Fenton, you have seen some of these types of plows in operation, haven't you? A. Yes, sir.

Q. From your observation of plows with spring clamps, what would be your opinion relative to the possibility of the bolts at the plate part in the 100 series [970] becoming loose in use? A. My observation and experience with this type of machine would indicate that they always work loose under heavy duty work. Unless the farmer or operator tightens them frequently they will work loose. I might add there that that is essentially true when the pivot points become worn and there is a little more movement. As a result the wear is in other parts of the clamp.

Q. Mr. Fenton, I have placed on the easel the claim chart, Plaintiffs' Exhibit M, and that is the one that shows the 100 series. I believe you were asked some questions the other day relative to claims and also as to mechanical elements. In comparing element 6 of Claim 1 with the defendants' structure, would you please read that element. A. "means having connection with the forward end of the shank and with the other end of the coil spring whereby the spring yieldably maintains said normal contact of the upper face of the plate portion of the shank attaching member with the underface of the fixed member to maintain the normal plowing depth of the ground working tool."

Q. Now, Mr. Fenton, it is possible I missed on my notes, but as far as the mechanical element that would be called for in that claim, do you find it in the defendants' [971] structure, the 100 series? A. The mechanical element?

Q. Yes, sir.

Mr. Morris: Which element are you talking about?

Mr. Gold: Element 6.

* * *

Q. (By Mr. Gold) Now, will you tell me in your opinion is the—I am asking the question over because of the confusion as to what we were talking about—in your opinion can you find the particular mechanical element that would respond to that element, that claim element, in the Deere 100 clamp? A. Not literally.

Q. Well, what about the mechanical equivalent? A. Actually the job is accomplished by the combination of the hinged member and the shank, which is bolted to the hinge member mechanically, that work together.

Q. In your opinion is the mechanical equivalent of element 6 of Claim 1 in the Deere 100 series? A. Yes, it is, that element.

Q. Now, if you will refer to Claim 2, which is Plaintiffs' Exhibit N, and also referring to the 6th element of the claim, did you find the particular literal reading of that claim in the Defendants' 100 series? [972] A. The situation is the same. Literally it doesn't agree, but mechanically the equivalent is there.

Q. Did you hear a definition of mechanical equivalent the other day? A. Yes, I heard it, but I don't think I could repeat it right now.

Q. Now, let's also look at Claim 1—

Mr. Morris: Mr. Gold, I am going to have to object to his testimony as to mechanical equivalents then, unless a definition is stated so that we may understand we all have in mind the same definition applicable to his testimony, and unless that be done I move that the previous answers as to mechanical equivalents be stricken.

Mr. Fishburn: I think the witness said he couldn't repeat the term and I don't think the objection is well taken in view of the fact that the witness said he couldn't repeat it.

Mr. Morris: I am not asking him to repeat it, I am asking that a proper definition be given so that we may confine the testimony within the confines of that definition.

The Court: Yes, I think that would be proper.

Q. (By Mr. Gold) Very well. Mr. Fenton, if we define mechanical equivalents as being something that is [973] substantially the same structure, providing substantially the same result in substantially the same way, in your opinion would the mechanical equivalent of element 6 of Claim 2 of the 798 patent be found in the Deere 100 series? A. Yes, sir, it certainly would.

Q. With that same definition of mechanical equivalents, what would your opinion be as to all of the elements

of Claim 2 being present in the Deere 100? A. That is a pretty broad question. I think I can honestly testify that with that definition of mechanical equivalents they are all present, because it operates the same and functions the same.

Q. Now we believe we should go back to Plaintiffs' Exhibit M, which shows Claim 1 of the Deere 100 series, and with the definition of mechanical equivalents that I just gave a minute ago, in your opinion is the mechanical equivalent of element 6 present in the Deere 100 series, element 6 of Claim 1? A. Yes, sir.

Q. Considering Claim 1 on the 100 series clamp and the same definition of mechanical equivalents, in your opinion is each and every element of that claim present in the Deere 100 series? A. Yes, sir.

[974] Q. Now I have placed on the easel Plaintiffs' Exhibit L, which shows the Deere 650 series clamp, and also shows Claim 1 of the 798 patent. Using our definition of mechanical equivalents, in your opinion is element 6 of Claim 1 the mechanical equivalent of Claim 1 found in the Deere 650 series clamp? A. Yes, sir.

Q. In your opinion is the mechanical equivalent of each and all of the elements of Claim 1 of the 798 patent found in the Deere 650 series clamp? A. Yes, sir.

Mr. Gold: That is all.

The Court: We will be in recess until 1:30.

(Noon Recess.)

---

[975] AFTERNOON SESSION, THURSDAY, MAY 10, 1962

J. C. FENTON resumed the stand and testified further as follows:

Re-Cross-Examination by Mr. Morris.

Q. Mr. Fenton, I would like to discuss with you just a moment this matter of the flexing of the shank in the forward portion that is up within the body of the clamp structure. Let's take a device like the Graham 811 device,

which is shown here in the drawings, Defendants' Exhibits 14-A and 14-B, taken from the 811 patent, in which there is a shank member that is located on top of the fulcrum plate, the fulcrum plate lies underneath, the spring rod on that end (indicating). Now, where is the pivot point of that shank in the 811 structure? Is it up above or down below? A. Up above, where it contacts the fixed member.

Q. All right. So that we would have a point, wherever it is, or a line on the rear base of the body portion of that clamp, which constitutes the pivot point, is that correct? A. Yes.

Q. So that the force, whatever ground force there is that tends to rotate the shank, is upward and rearward, an upward component of that force against the point [976] on that frame member about the point on which it tends to rotate, is that correct? A. That is right.

Q. All right. Then of course the weight of the plow acting through that pivot point resists the tendency of the shank to go up, does it not? A. Yes, sir.

Q. And on the opposite end of the shank, acting through the lower plate, is a spring and spring rod which is the pressure that resists the tendency of it to rotate, is that correct? A. That is correct.

Q. All right. Now then, in that type of structure you have testified here that in your opinion there would be a tendency of the forward portion of that shank in the line between the spring rod and the point of pivot to flex downwardly, is that correct? A. I did that in other structures, but not in this.

Q. Well, is that true? A. Yes, that is true.

Q. Now then, in the 811 structure, as shown in the patent, I refer you to Fig. 2 of the drawing, there is a very noticeable clearance between the under surface of the fixed member and the upper surface of the shank itself, is there not? [977] A. That is right.

Q. Now, with that amount of clearance, as shown in the drawings, and also as you have seen it in the actual commercial structures, there is plenty of room for the shank to flex certainly more than thirty-five thousandths of an inch in its forward end, isn't there? A. I believe so.

Q. And you would certainly anticipate, based on what you have said heretofore, that it would flex at least that much, would you not? A. Depending on the load.

Q. Depending on the load, of course, assuming that you get a load here on the plow tool of sufficient strength to flex the forward end of the shank thirty-five thousandths of an inch. Is that correct? A. Substantially correct, I believe.

Q. All right, sir. Now then, the amount, magnitude of the flex in the forward end of that shank would depend upon the load which would cause it to tend to flex and the amount of clearance allowed to permit it to flex, would it not? A. Correct.

Q. So that if you opened the clearance here a quarter of an inch and you imparted a force sufficiently great on the rear, you could have a full quarter inch flex, [978] couldn't you, in the forward end? A. It is possible.

Q. Quite possible. In other words, the plate lying underneath the shank itself in its forward portion would not prohibit the flex of the shank, provided the clearances were adequate to permit it; that is true, isn't it? A. Yes, sir.

Q. All right. So that whether you have the plate located underneath the shank or above the shank, the magnitude of flex in the forward end of the shank will depend upon the clearances provided to permit it to flex and the forces which tend to cause it to flex? A. The fulcrum plate in this instance has no influence on the flexing, because it is removed from it.

Q. All right, so that whether the plate be above or below is utterly immaterial to the flex in the shank provided sufficient clearance is in the structure to permit it to flex, is that correct? A. In that particular structure only. That doesn't apply to other structures, does it? You didn't mean it to?

Q. I am asking you about this one, for the time being. A. Yes.

Q. All right. Let's transfer our thinking to Jeoffroy SC-580. The drawing is on the board, shown on [979] Defendants' Exhibit 11. It is, as you have already stated, quite similar to 811, with the shank above the plate.

Would everything that we have just got through saying about 811 with respect to the flex in its forward end be true of Jeoffroy SC-580? A. No, I don't think it would.

Q. Where would it differ? A. The shank in this place—of course we can't see the clearance back there on this one.

Q. You saw lots of them, you testified about them in the first case, didn't you, Mr. Fenton? A. Yes. But I can't see the clearance here.

Q. Well, let's get a clamp before us so we don't have to guess about it. I have in my hand now the Jeoffroy SC-580 clamp which has been introduced in evidence here. Will you check the clearances there, Mr. Fenton. A. Yes.

(Witness complies.)

Q. And they are certainly more than thirty-five thousandths of an inch, aren't they? A. Yes, quarter of an inch there.

Q. And it would certainly permit the shank to flex in the forward end, any magnitude of the amount that you would anticipate here, would it not? A. Yes, I believe so.

[980] Q. And the location of the plate portion below the shank would not prevent that shank from flexing, would it? A. Possibly at the end where—at the other end it might touch there.

Q. Which end? A. The front end.

Q. You mean it wouldn't flex at the front end? A. Yes, there may be a portion there where it might not.

Q. You wouldn't actually expect it to flex clear out to the end, would you? A. Some, very little.

Q. A very minor amount? A. Very minor.

Q. All right, sir. Now transfer your thoughts to 798 and let's for the moment disregard the language of the patent, which says that the shank and the pivoted part are held in constant continuous contact. Now then, in that structure—I have placed a drawing from the patent on the board, Defendants' Exhibit 21-A, as it is drawn, showing no clearances whatsoever, with the shank lying underneath the plate—where would your flex be? A. Throughout the length, from that stirrup to the bolt.

Q. And in what direction? A. Downward.

Q. Of course you will admit, will you not, Mr. Fenton, that [981] if this loop element were a machine tool type fitting, it would prohibit or certainly limit the flex of the shank, would it not? It would tend to limit the flex of the shank? A. I doubt it.

Q. Didn't you say this morning that if the bolt and strap on the Deere 100 was pulled up tight it would tend to lock the shank at that end? A. In that case you put a lot of pressure on with a wider plate. It is impossible, even though you machine this you have to slip the shank in.

Q. So you don't think it would have any bearing on it? A. No, no appreciable bearing.

Q. All right. Whatever the situation may be, though, there would have to be some clearance in order to permit it to flex, would there not? A. And to push it in there.

Q. Well now, we are not concerned about pushing it in now. There would have to be some clearance in order to permit it to flex, would there not? A. Yes, bend in that area, to bend in that area.

Q. Now then, let's look at it the same way we looked at 811 a while ago. Our point—let's put it on the blackboard. In 798 with the shank lying underneath the plate what is it that the shank pivots about? [982] A. Pivots about the pivot pin.

Q. And where is the pivot pin with respect to the shank? A. Above the shank.

Q. So that the point— A. Also above the stirrup.

Q. All right. So that the point of resistance to the pivoting action of the shank is located above the shank just the same as it was in 811? A. Yes.

Q. That is true, is it not? A. Yes.

Q. Now then, what direction would the shank tend to flex? A. You mean—

Q. In the 798? A. Downward.

Q. It would tend to flex in precisely the same direction as it would tend to flex in 811, wouldn't it? A. Yes.

Q. And would you anticipate that the magnitude of flex in the forward end of the shank would be substantially

the same as in 811? A. The length of that section is very important there in flexion.

Q. Sir? A. The length of that section in flexion, and as I recall [983] the 811 is a little shorter, so it might be less, a little less flex.

Q. Solely because of the section of shank up inside the clamp, that is all? A. Yes.

Q. Given the same length of the forward portion of the clamp, though, you would anticipate that the magnitude of flex would be precisely the same or substantially the same as in 811, wouldn't you? A. I would think so.

Q. Is there anything in the world in this patent that tells you about the size of the shank or how much of it is up inside of the shank, what the length of it is in 798? A. No.

Q. There is not, and there is not in 811 either, is there? A. No, I was simply thinking of the models.

Q. So then in shifting from the 811 structure to the 798 structure we have neither changed the direction of flex in the shank nor have we changed the magnitude, have we? A. Not in that portion.

Q. In that portion of the shank, and that is what we are talking about, isn't it, Mr. Fenton? A. That isn't all I was talking about when I was testifying this morning [984] Q. Do you want to talk about some other flex in the forward end of this shank now? A. Not in the forward end.

Q. Of course the flex back in the curve behind the clamp back to the ground, we have had that always, we had that back before we had any spring clamps, didn't we? A. Yes, but I don't know whether you are coming up to my improvements or changes. The more—

Q. Well, let's just come to them right now, and in particular this one. A. All right.

Q. One of the points which you say Mr. Graham has done in 798 to improve 811 or over 811 is that the structure achieves a more desirable flexing of the shank. All right. Now, we have just agreed, have we not, that there is no change in the direction of flex of the shank? We have agreed to that, haven't we? A. No, we haven't agreed to that. We have agreed to the flexing in that portion, yes.

Q. In the forward portion? A. Yes.

Q. All right, let's confine it to that for the moment then. There has been no achievement, no change of direction of flex in the forward end of the shank? A. That is right.

[985] Q. And there has been no change in the magnitude of flex in the forward end, has there? A. Not appreciably.

Q. Then where is it that the more desirable flexing has been achieved? A. It is achieved by the stirrup, which doesn't let it wobble so much. You don't get side flexing.

Q. Oh, do we want to shift the flex of this shank now from flex, as we have been talking about it for two days. to a lateral shift of the shank? A. I was talking about over-all improvements or change in—

Q. Let's confine, please, Mr. Fenton, confine our thinking to this more desirable flexing that has been achieved. The control of lateral movement of shank is not the flexing of the shank, is it? A. It causes the flexing.

Q. In this old sloppy 811 type structure where you had all that working around that we talked about, as Mr. Gold brought out here, you had a tendency of that shank to fishtail as it went through the ground, didn't you? A. That is right.

Q. And that was because of the absence of lateral support for the shank, wasn't it? A. Yes, correct.

[986] Q. That was not the flexing of the shank, was it? A. Certainly it is flexing of the shank.

Q. Well, where does it flex? Point it out to the Court, please. Where is the flexing that causes that? A. These drawings don't view it from the rear.

Q. Let's look at 811 over here now. A. This shank, because it isn't supported here—every one is under stress, is a flex.

Q. Do you mean out behind the clamp at the rear it does some fishtailing in 811? A. No, it does it in—in 811, certainly, yes, quite marked.

Q. Is that the flexing of the shank you are talking about? A. That is one of the flexings.

Q. And that has been controlled in 798 by doing what? A. By putting the stirrup around it here.

Q. And that makes the shank track better? A. Better, yes, sir.

Q. Of course that particular matter had been fully controlled in Glencoe, hadn't it? A. Yes, they had a similar element in Glencoe.

Q. So by providing—what you are saying to the Court then is that by providing the stirrup element in 798 he has controlled the shank and got a better flexing in that it doesn't have as much lateral play, is that what you are saying? [987] A. That is right, compared to 811.

Q. How about compared to Glencoe? He wouldn't achieve anything though in that respect, would he? A. No, I wouldn't think so.

Q. All right. Now, I want to confine our attention for the moment, please, Mr. Fenton, to this flex that has become such a monument here. You have in the past conducted some flexing tests in two devices. One of them is the Jeoffroy HT-5 structure, Plaintiffs' Exhibit C, with a three-quarter inch shank, which was the type of structure in evidence in the second of the Jeoffroy cases, the one in which this patent was first involved? A. Yes.

Q. All right. That is the first one. Then the second flexing tests that you have conducted were in a later modification of the Jeoffroy structure which had a set screw to hold the shank at the rear, as shown here in Plaintiffs' Exhibit D-1, that again being a three-quarter inch shank? A. Yes.

Q. All right. The first of those tests was conducted when, please? A. I think it was '56.

Q. And the second one? [988] A. My impression is we did it later in the same case, just went out there again and did it in the same case.

Q. All right. In any event, that is the two tests that you conducted and that is all that you conducted, isn't it? A. Yes.

Q. Will you tell us, please, sir, how you had your gauge, your dial—I don't know what part of it you call it particularly, the gauge that you used to measure the flex in the shank in that Jeoffroy structure, tell us how you set it up, please. A. It was mounted on an arm off of the

train which extended out and under the shank, capable of adjustment.

Q. Did it come up to a point of contact on the underneath surface— A. Yes, sir.

Q. —of the shank member? A. Correct.

Q. And you gauged then your bending of the shank as it moved downward at that point against the gauge surface? A. Correct.

Q. Now, you did not attach your gauge to the hinge member itself, did you? A. No, sir.

Q. So that those tests told you absolutely nothing about the flex of the shank away from the hinge member? You [989] didn't even attempt to measure that flex, did you? A. Not by an instrument, no.

Q. And your testimony to this Court that the shank flexes away from the hinge member in 798 is dependent upon those tests made with a Jeoffroy structure in which you didn't even measure any flex away from the hinge member? A. We could see it.

Q. Oh, you say you could see it but you didn't measure it? A. Oh, you could very easily see it.

Q. What you have told the Court, though, and what your test actually shows, is that you had a maximum of thirty-five thousandths of an inch of bend in the shank from its normal position? A. That is right.

Q. Under a thousand-pound load, and that is all that you can say as far as measurement is concerned, isn't it? A. That is right.

Q. All right, sir. You have made no tests whatsoever on either of the Deere structures, and your idea that they would flex away from the hinge member is pure theory, isn't it? A. Yes.

Q. All right. And if it is true that the tests show in 650 that there is no flexing of the—I will put it this way, [990] Mr. Fenton. There is no way that you can deny that the shank in the 650 series does not flex away from the hinge member, is there? A. Not except as a matter of reason.

Q. But reason, as you have many times said before, sometimes doesn't check out in the field? A. That is true.

Q. The pure physical theory oftentimes doesn't check out when put to the test, does it? A. Well, that is a general statement.

Q. Well, it is true, isn't it? A. It all depends.

Q. Certainly it depends, and you are in no position to say otherwise, are you? A. No, except that I have seen much testing of steel and other devices in the laboratories and—

Q. Yes, but you have seen no testing of 650 or 100? A. I have not.

Q. All right. Now I would like to shift your attention, if I may, Mr. Fenton, to the prior art. Well, just a minute before we leave that. Do you regard the small degree of flex in the forward end of the shank that lies between the pivot point and the point of spring attachment to be of any significance or any importance to the functioning of a device such as 798? [991] A. Unless you are approaching the elastic limit, I think this flexing will reduce the maximum stress at the point of pivot there, where the maximum stress does occur. I think it will reduce that. I don't know how much.

Q. Do you think it is a substantial factor, a factor of importance in the functioning of the structure? A. Not a great factor, no.

Q. Not a great deal, and you so testified in the Jeoffroy case, in which you said that it was characteristic of the structure but that it was not in your opinion of any great importance, and that the device would operate substantially the same whether the flex was there or not, didn't you? A. Unless, as I just said now, unless you are approaching the elastic limit of these shanks, then I think it might be quite important.

Q. Well now, didn't you testify in the Jeoffroy case—let me read your testimony. A. I don't remember that testimony of course.

Q. Let me call it to your attention then and see if this is not what you testified to. Page 112 of Vol. 1, Case No. 15117, Fifth Circuit, beginning about two-thirds of the way down the page. I am omitting a sentence which is in another context, commencing: "Do you consider [992]

this portion, this what you called the resilient action of the shank, Mr. Fenton, in the forward eight or nine inches of that shank that's up inside the mounting or bracket, important to the function of the device?

"ANSWER: Not too important. It is present, but not too important.

"QUESTION: It functions just as well as whether that were there or not, wouldn't it?

"ANSWER: In this particular case in this device?

"QUESTION: Yes, sir.

"ANSWER: I think it would essentially, yes."

That was your testimony in that case with respect to the Jeoffroy HT-5 structure, Plaintiffs' Exhibit C, was it not? A. Or it might be that the other clamp, there was one J-210, wasn't there? We had one J-210? But it doesn't make any difference.

Q. This was the first case and the only one in issue was the HT-5 like Plaintiffs' Exhibit C here? A. You may be right on that.

Q. You don't question that that was your testimony, do you? A. No.

Q. All right. Now then, Mr. Fenton, turning your attention to the prior art, on direct examination this morning you testified that in the Glencoe structure you found, [993] and I will take the Glencoe structure as it appears here on Defendants' Exhibit 11, that you found in that structure substantially all of the elements, mechanical elements as provided for in the 798 claims, in substantially the same relationship and would do substantially the same work, with one exception, and that was that the position of the shank and the hinged member were inverted? That is correct, isn't it? That is a correct statement of your testimony? A. Yes, I believe so.

Q. And we have just pointed out that it doesn't make any difference whether the plate is below or above the shank insofar as the flex in the forward end of the shank is concerned, haven't we? A. No, we certainly haven't.

Q. Will you agree to that? A. No.

Q. You won't agree to that? A. That is just contrary to my testimony this morning.

Q. What difference then does it make in the flex of the shank whether the hinged member is above or below, as in Glencoe? A. When the shank is above the hinge member the shank presses down on the hinge member and doesn't flex. When the opposite is true—of course those are both [994] in the same position in that drawing, but when the opposite is true the shank flexes away from the hinge member underneath.

Q. All right. Then are you saying, Mr. Fenton, that the sole distinction, insofar as substantial operation, substantial means of operation, and structure is concerned, between Glencoe and 798 is that the shank is above the plate in Glencoe whereas it is below the plate in 798? A. Well, that is the main difference in the two structures, principally.

Q. All right. And what does that do, what is achieved in 798 by inverting the position that is not achieved in Glencoe? A. There is a much better handling of the forces in the 798. The upward movement of the shank goes directly to the fixed member. In Glencoe it goes to that stirrup and to the bolt. It is very weak construction, considering the stresses that are called upon there to stand.

Q. Now then, just a minute, let's stop right there. Then you want to make a distinction on the basis that 798 reveals a stronger structure than Glencoe, is that correct? A. Yes, it does.

Q. How do you reach that conclusion, Mr. Fenton? What is [995] there in the patent that tells you anything about the strength of the structure? A. I am not looking at the patent, sir, I am look at the structure itself.

Q. You are not looking at a 798 structure, because there never has been one of them. What is there about the 798 patent that tells you anything about the strength of structure that is proposed? A. Well, I don't recall.

Q. There is nothing, is there? So then on that basis the strength of the device is not material, because there is nothing in the patent that says anything about strength, is there? A. We are looking at the structure here also, not only the patent.

Q. All right. You pointed out one difference now, and that is that 798 is a stronger structure than Glencoe? A. I believe it is, yes.

Q. You don't find anything in the patent that tells you anything about strength of structure though, do you? A. No.

Q. And strength of a structure depends upon the size and materials used in it, doesn't it? A. Yes.

Q. Now then, what else do you see as a distinction that is [996] achieved in 798 over Glencoe? A. Those are the principal things. I don't see any other.

Q. And since strength is out of the question, since the patent says nothing about that, then we return ourselves to the one point of distinction and that is that in Glencoe the flex of the shank is in a direction toward the plate member whereas in 798 the flex of the shank is in the direction away from the hinged member? A. And the hinged member is in a different location than 798.

Q. That is all the difference it makes, though, is it permits the shank in one case to flex—the 798 permits the shank to flex away from the hinged member, whereas in Glencoe the tendency would be to flex toward the hinged member? A. Yes.

Q. All right. Then that returns us, Mr. Fention, to the proposition then of what difference does that make in the flexing of the shank in the forward end. In Glencoe, if we have adequate clearance in the stirrup or loop member at the rear to permit the shank to flex in its forward end, then we would have the same magnitude of flex and the same direction of flex as in 798, wouldn't we? A. No, because they are reversed. The shank is in a [997] different position.

Q. Yes, but the direction of flex of the shank is the same, isn't it? A. No.

Q. Let's test that. I think you will agree that it is if you will just look at it. A. One is downward—

Q. Just a moment. Let me test this out for you. We will put Glencoe here on the blackboard. I will put our pivot pin. Of course that is a crude drawing but you understand it clearly enough, do you not? This point I am pointing to would represent our pivot pin, which is located below the hinge member, do you agree to that? A. Yes.

Q. Intermediate between that we have the shank which lies above the plate portion of the hinge member, attached to the hinge member by means of a bolt and nut, is that clear enough? A. Yes.

Q. Then at the rear we have the upstanding loop element which goes up around the shank to hold the shank at that point, is that clear? A. Yes.

Q. All right. Now then, as the ground forces are encountered [998] on the Glencoe plow tool we again have an upward component which tends to rotate the shank about the pivot pin, do we not? A. Yes.

Q. And we have a fulcrum point above the shank which resists that force, do we not? A. Yes.

Q. And in this instance that fulcrum point would be in the loop element of the hinge member itself, would it not? A. Yes, sir.

Q. And on the opposite side from that fulcrum point we have a spring which tends to pull the shank the opposite direction or to resist the rotation or tendency to rotate, do we not? A. Yes.

Q. Then between the fulcrum point and its forward point of attachment, whatever tendency there is of the shank to bend would be in a direction downward, would it not? A. Correct.

Q. All right, sir. So that whatever tendency of the shank there is to flex in Glencoe the direction of its flex is precisely the same as it is in 811, in SC-580 or 798, isn't it? A. Well, the direction, regarding up and down, is not—

Q. We will come to the other in just a moment. Do you [999] agree to that? A. Well, yes, they would both be downward.

Q. All right, sir, just like the other three that I have mentioned, is that true? A. Yes.

Q. All right. Now then, you want to say, though, that because the plate portion lies underneath the shank that it will not be permitted to flex, it will flatten out, and it can't flex? Is that your testimony? A. That is right.

Q. And of course, Mr. Fenton, I think you will recognize, if you will just give that a bit more thought, that that is

incorrect, unsound conclusion. I have taken out the portion of the Glencoe shank and hinge member and I have it, holding it here in my hand, in the same orientation it would be in the clamp, am I not? A. Yes.

Q. And at the rear pointing toward you is the upstanding loop element which forms the fulcrum point? A. Correct.

Q. And whether or not the shank could flex in its forward end would depend upon whether there is adequate clearance between the shank and the plate portion for the shank to bend, is that true? A. No.

[1000] Q. It is not? A. No. In fact, the clearance will help it to flex.

Q. The greater the clearance the more it will flex? A. The more it will flex.

Q. All right. That is exactly the point. So that if there is clearance, as in this instance—do you have a steel rule, Mr. Fishleigh? So that in the Glencoe structure we actually have a clearance between the top of the shank and the bottom of the loop of between a 32nd and a 16th of an inch, don't we? A. Somewhere in there, in that particular model.

Q. In this particular model? A. Yes.

Q. So that certainly this shank could have adequate room to flex as much as thirty-two or thirty-five thousandths of an inch, which you found in the Jeoffroy type structures using the quarter inch shank, couldn't it? Is that true? A. Of course—

Q. Just a minute. Is that true, Mr. Fenton? A. Not precisely, no.

Q. It could not flex that much? A. Because it doesn't flex just here (indicating), it flexes along and part of it might be lying right against the shank and here it would be farther away.

[1001] Q. All right. The greater the load, the point of pressure moves backward along the shank, does it not? A. Correct, yes.

Q. So that there would not be any change in the magnitude of flex, it would only be in the point of flex? A. Distribution.

Q. Under some loads it might be toward the rear, under some loads it might be toward the front? A. Yes.

Q. And if we attached the bolt farther forward we would provide greater room for it to flex, would we not? A. I would say so, yes.

Q. But the magnitude of flex is dependent upon the clearances allowed and the direction of flex is dependent upon the fulcrum point, isn't it? A. Yes.

Q. All right. So that the net result is that in Glencoe the magnitude of flex permitted and the direction of flex permitted is precisely the same under the same given conditions as it is in 811, SC-580 and 798?

Mr. Fishburn: If Your Honor please, I don't believe that is the witness' testimony. If he is talking about direction it might be true, but this is a different situation. [1002] The Witness: He says he will take that up later.

Mr. Morris: Will you read my question, please. (Question read as follows:

"All right. So that the net result is that in Glencoe the magnitude of flex permitted and the direction of flex permitted is precisely the same under the same given conditions as it is in 811, SC-580 and 798?")

* * *

A. I don't agree with you, because to say that—they are all downward, but downward isn't a factor at all. It is the flex in relation to the supporting members, and in 798 it is away from the shank. In Glencoe it is [1003] against the shank.

Q. Oh, yes, we have been through all of that, Mr. Fenton, and nobody would question that— A. Nobody.

Q. —direction relative to the plate in one is against the plate, in the other toward the plate. A. That is right.

* * *

Q. (By Mr. Morris) In the performance of the shank it makes no difference because the magnitude of flex permitted and the direction of the flex permitted is the same, isn't it? A. No.

Q. Point out where the difference is, please. A. You are depending, in the Glencoe, on that clearance, and the

clearance is indefinite. You are saying that in 798 there has to be a machined spacing there.

Q. No, I didn't say it had to be. I just merely asked you if you had that kind of a situation. [1004] A. The clearance in this particular sample of Glencoe is rather larger than I would expect. Maybe if it is less there would be a different flexing effect.

Q. What would be the magnitude of flex that you would anticipate in the 798 structure if one of them was ever built? A. Quarter of an inch.

Q. A quarter of an inch? A. That is, if you put four thousand pounds on it.

Q. Have you ever seen one in anybody's device that you have measured a quarter of an inch in? A. Well, we had a 32nd in a thousand pound load on a three-quarter inch shank.

Q. You have volunteered many times here, of course, that Jeoffroy HT-5 is supposed to be a Chinese copy of 798, and this is one that you say is sure enough in accordance with 798, don't you? That is what you testified before? A. Yes.

Q. That is still your view, isn't it? A. Yes, in most respects.

Q. And the maximum from a thousand-pound pressure on a three-quarter inch shank was a thirty-five thousandth of an inch, and yet you want to tell the Court here that you would anticipate one of those things flexing [1005] a quarter of an inch in that area? You don't really want the Court to believe that, do you? Of course you don't.

Mr. Fishburn: Let the witness answer.

A. Under tests—the tests that Mr. Fishleigh conducted are not shock loads, you see, they are steady loads; there is a terrific difference between a shock load and a steady load.

Q. Yes, but the amount of flex depends upon the total magnitude of the force, doesn't it? A. Yes, and the total magnitude of a shock load may be tremendously different than the one you measure.

Q. It may be 4,000 pounds or it may be a thousand pounds, and whether it hits quick or hits slow, the same total force will bend the shank the same amount, won't it, because it is the number of pounds that flexes it? A. MV squared is the essential element.

Q. Well, yes, but that is dependent— A. You see, the velocity of the stress, which is the shock load.

Q. And it ends up in so many pounds of force on the shank? A. Pounds isn't the only part of it though. That is the point I am making.

Q. But in any case do you want to tell the Court that you would anticipate in one of these devices the shank [1006] would flex a quarter of an inch in that forward end? A. Well, I think that is certainly extreme.

Q. And when you said back in the Jeoffroy case several years ago and when you said awhile ago that you didn't really think that the flexing within that forward portion was important to function, you meant that, didn't you? A. Well, we were talking about different things then, arguing different things, you remember?

Q. No, I don't remember that, Mr. Fenton. We were talking about just one clamp, Jeoffroy HT-5. A. We were talking about tightness of set screws and those things.

Q. Oh, yes, I recall that you testified that the Jeoffroy HT-5 had the movement, and so on, that the old 811 had in it. But that is not what we were talking about in these questions I asked you awhile ago, that I read to you, was it? A. Well, I am not sure whether you have oriented it properly, that is, as regards this problem. You just read a section of the testimony.

Q. Let's don't have any doubt about it, Mr. Fenton. (Reading) "Do you consider this portion, this what you called the resilient action of the shank, Mr. Fenton, in the forward eight or nine inches of that shank that's [1007] up inside the mounting or bracket, important to the function of the device?

"ANSWER: Not too important. It is present, but not too important.

"QUESTION: It functions just as well whether that were there or not, would it?

"ANSWER: In this particular case in this device.

"QUESTION: Yes, sir.

"ANSWER: I think it would essentially, yes."

A. You read the same part. I thought perhaps the basis for it might be a little different.

Q. Is there any doubt in your mind that we were just talking about one structure, Jeoffroy HT-5? A. No doubt about that, but I don't know the orientation of the argument at that time.

Q. All right. Now, Mr. Fenton, you have characterized the prior art here as ancient art and as modern art. How far back would you go to class it one way or the other, ancient or modern? A. I said that I classed it horsedrawn and tractor-drawn or heavier tools. One of them, Traeger, is not too old, 1941.

Q. Traeger you couldn't possibly classify as ancient art, could you? A. No, you surely couldn't, on that basis. There are a lot [1008] of devices in India that are today—they are ancient art.

Q. Yes, but this is not in India, it is here in the United States and it is in a patent. A. That is in Australia.

Q. But it is here in the courthouse in the United States disclosed to us? A. Yes, but intended for horses.

Q. And shows the date of 1941, doesn't it? A. Yes.

Q. Now, then, the thing you said you didn't find taught in the ancient art was the idea of a fulcrum plate? A. That is right.

Q. You classified the ancient art as art in which you merely had a pivoted shank, resisted by a spring, isn't that right? A. No. I said that these were examples of ancient art and they all were simple pivoted members.

Q. Well now, is Traeger, 1941, a simple pivoted member? A. It certainly is.

Q. Does it not have a fulcrum member? A. In no sense of the word.

Q. What is it that the shank is attached to and about which it pivots? A. It is attached to another—about which it pivots?

[1009] Q. Yes, sir. A. It pivots around that green pivot pin, which is mounted on the other spring.

Q. Well, it pivots around a pivot pin, does it not? A. Yes.

Q. And the shank is attached to a shank attaching member or pivoted member by means of a rivet or fastening means, isn't it? A. Yes.

Q. And what is it that transmits the load of the shank into the pivot pin? A. The attaching member of the plate that is fastened on there.

Q. The load—the rearward pull of the shank, by means of its attachment to the hinge member through the rivet, is transmitted into the hinge member and in turn to the pivot pin, is it not? A. There is no hinge member there.

Q. What is the green member if it is not a hinge member? A. Well, it is a plate that supports the pivot pin.

Q. Well, does it pivot with the shank? A. No, I don't think so.

Q. From reading the drawings can't you see— A. That little plate there probably is fixed and the shank pivots in between it.

[1010] Q. Then you don't understand the Traeger disclosure as showing a pivoted member to which the shank is attached? A. Why, certainly, the shank is pivoted.

Q. Oh, the shank itself is pivoted? A. Yes, indeed.

Q. Where, please? A. At that pin (indicating).

Q. This rear portion of the shank is itself pivoted? A. Well, through that little attaching means.

Q. It is pivoted only in that it is attached to the pivot member, which in turn is pivoted about the pivot pin, isn't it? Isn't that true? A. Well, that is an awfully thin distinction. I don't see any.

Q. Well, it is true, isn't it, Mr. Fenton? A. Not necessarily true. You must have an attaching member. You can't have a pivoted shank without an attaching member. That is self-evident.

Q. Of course you pointed out in Moore this morning that—I would like to get the drawing before you—you pointed out in Moore that we have a direct pivoted shank with no shank attaching member? A. Yes.

Q. Now that is a true direct pivoted shank in which the [1011] shank itself— A. Just as much of an attaching member there as there is over here (indicating). See it there, it extends across between those two members.

Q. Then what distinction do you make for a direct pivoting shank as compared to a shank which is pivoted by means of a shank attaching member? What distinction do you make? A. I didn't make any distinction on that point.

Q. What is the distinction you want to make then? A. The distinction I made was that in Graham 811 we have a fulcrum plate which mounts, transfers the forces from the shank to the fixed member. That is the element that isn't present in this ancient art.

Q. That is what the patent calls it, is a fulcrum plate? A. Yes.

Q. And I am entirely willing to accept that terminology. A. O. K.

Q. Now, let's define what that fulcrum plate, as you see it, does in 811. It transmits the pressure of the shank rearwardly to the pivot point and permits it to pivot. That is it, isn't it? A. Yes.

Q. And that is all, isn't it? A. It is mounted on the fixed member there. This must be [1012] mounted on the fixed member.

Q. Of course the pin must be mounted on a fixed member to resist— A. Yes, that is what it does.

Q. But it transmits the rearward pull of the shank through the pivoted member into the pivot pin, doesn't it? A. Yes.

Q. And in turn of course from there into the main body of the clamp? A. Correct.

Q. In Traeger does the rivet which attaches the shank to the pivoted member transmit the rearward pull of the shank by means of that rivet into the pivoted member and in turn into the pivot pin? A. In a different way, however.

Q. Does it do that, Mr. Fenton? A. Well, it should if the thing functions.

Q. All right, sir. So that in the process of transmitting rearward thrust of the shank into the pivot pin, the pivoted member in Traeger does it precisely the same as the pivoted member in 811, doesn't it? A. Does that swing, that member?

Q. Do you not understand the art, Mr. Fenton? A. Does that swing?

[1013] Q. You are the expert here. A. Then it isn't a fulcrum plate if it doesn't swing.

Q. Do you understand the art, Mr. Fenton? A. Certainly.

Q. Well, does it or doesn't it swing? A. No.

Q. It does not pivot? A. Not that attaching—

Q. You don't understand that the green member called a shank attaching member pivots along with the shank? A. I am sure the shank does.

Q. Have you read the specifications? A. Yes.

Q. Would you like to refresh your memory about it? A. No.

Q. How do you suppose that rivet in this dotted line here which shows it in a rocked position, what do you suppose that rivet is doing off down there with the shank if it doesn't come along with some other part of it? A. Well, it is a pretty far, imaginative thing to claim that that is a fulcrum, isn't it?

Q. Mr. Fenton, you have defined the fulcrum plate and what it does, and I merely want to know if the pivotting shank attaching member in Traeger doesn't do precisely [1014] the same thing in transmitting that thrust of the shank into the pivot pin. A. I don't think so.

Q. You don't think so. All right. Well now then, let's come on to the other modern art. Of course you want to talk about the days of 811, when it was devised, but the point of time in issue here is when 798 came into existence. A. Yes, sir.

Q. As of that date there existed, of course, as parts of prior art, Graham 811, Jeoffroy SC-580, and Glencoe, so that when we come to the alleged date of conception of 798, the principle of a fulcrum member which transmitted the loads of the shank into the pivot pin, and to the

other portions of the structure, were completely before us, were they not? A. Those that are shown here, yes.

Q. And nothing was done to change the principle of the fulcrum member in any way whatsoever in 798 except to invert its position, was there? A. Yes, that is right.

Q. That is all? A. Yes, sir.

Q. All right. Every single mechanical element that is present in 798 was present in the art, wasn't it? [1015] A. In the modern art.

Q. In the modern art that preceded it? A. Yes.

Q. And every single function— A. Well, wait a minute. Yes, I think they are all present.

Q. And every single function performed or which you would expect to be performed by the 798 structure was present in the modern art? A. No, not—in a different way.

Q. What function was not present? A. The improvements that we suggested in 798 over 811 certainly were different, weren't they?

Q. Different from 811, but you must consider the rest of the art, mustn't you, Mr. Fenton? A. Well, all right. The other art—Glencoe, we have already gone over that, that there is a reversal of parts there.

Q. Let's take the additional things. I told you awhile ago we would come to them. The additional things that you say were present in 798 that were not present in 811 or were an improvement over 811. No. 1, longitudinal movement of the shank relative to the pivoted member was eliminated by fastening the two together with a bolt. That is your No. 1? A. Yes.

[1016] Q. That had been fully accomplished in Glencoe, had it not? A. Yes.

Q. No. 2. The spring was relieved of the shank pulling load. That was accomplished by fastening the plate and the shank together by the bolt at the forward end and freeing the spring rod from the load that it had to bear in the 811 structure, wasn't it? A. Where is that in there?

Q. In Glencoe the spring rod bears no part of the pulling thrust of the shank, does it? A. No.

Q. And neither does it in Jeoffroy SC-580? A. No.

Q. That is correct. All right. The third element you have eliminated you say in 798 as compared to 811, you eliminated the wear at the rear by putting the shank below the plate and the plate between the shank and the fixed member so that the shank would not rub on the fixed member? A. Correct.

Q. All right. That was fully accomplished in Glencoe by a fixed attachment of the shank to the pivoted member and a location of the pivot pin so that there would be no rubbing contact of the shank with any part of the fixed member, wasn't it? [1017] A. Do you have the fixed member of Glencoe there?

Q. I do, sir. I have assembled it in its normal position, and the spacing in relationship to the pivot pin is such that there is no possible rubbing contact of the fixed member, is there? A. I was seeing whether this could contact if—

Q. But by the time you reached that point you would be way beyond the limit of your spring and have a solid structure, would you not? A. You have a very long spring in this model.

Q. You want to check that out? A. I don't think there is any contact.

Q. All right. So that that feature that was accomplished in 798 had been fully accomplished in Glencoe? A. Yes.

Q. All right. The next one was that the shank was arranged to pivot around the pivot pin rather than about a point on the rear of the fixed member? Of course that is part of the elimination of the wear contact, but that is one you did state, is it not, the shank was pivoted—arranged to rock about a pivot pin? A. I don't think I stated that, but then it does rock around a pivot pin.

Q. It does rock around a pivot pin, whereas in 811 it had rocked about a rear surface on the rear of the clamp [1018] itself and that was the wear producing element, wasn't it? A. However, the hinged member in the 811 rocks around the pivot.

Q. Oh, yes. Well now, if there is any difference, in any event, by providing a complete rocking pivot around a

pivot pin, then that was fully accomplished in Glencoe, wasn't it? A. It is definitely provided for, yes.

Q. Then your fifth item of improvement of 798 over 811 was that the lateral movement of the shank was restricted by the stirrup, that is correct, isn't it? A. Yes.

Q. That had been fully accomplished in Glencoe, had it not, by a substantially similar stirrup merely in an inverted position? A. Yes, it would function about the same.

Q. And the other, the achieving of a more desirable flexing of the shank, we have been over in full already? A. Quite thoroughly.

Q. So that in the final analysis there is only one thing that we can say for 798 over Glencoe, and that is that there is a different direction of flex of the forward end of the shank relative to the hinged member? A. That is right, yes.

[1019] Q. And in this entire 798 patent history, in its specifications, in its claims, in its drawings, and in its history through the Patent Office, there is not one word or one disclosure or one claim for such a direction of flex relative to a hinge member, is there? A. No, there is no mention of flexing.

Q. I have taken again from the file wrapper of the 798 patent some of the—well, let's start ahead of that. When we come to consider claims and mechanical elements of claims of course we must pay some attention to the wording of those claims in order to arrive at a construction, must we not? A. Yes, some attention, sir.

Q. All right. I would like to hand you a hypothetical claim which I have marked as Defendants' Exhibit 7. Let me give you the carbon copy, please. I would like for you to track with me, if you will, a claim such as that to test its application to some structures.

Mr. Gold: If Your Honor please, this exhibit shows here some hypothetical general claim. There is no claim in issue like this, there is no indication that such a claim is in the file wrapper, from what I understood so far from Mr. Morris, and I would like to object to some hypothetical wording that has no place in this case at all.

[1020] The Court: I guess first you had better let him state his hypothetical question and then make the objection.

Mr. Morris: Your Honor, I don't propose to ask any hypothetical question. I am presenting a hypothetical claim for the purpose of testing with this witness claim language in terms of mechanical elements.

The Court: If it is solely then for the purpose of testing the witness's knowledge, the objection is overruled.

Q. (By Mr. Morris) I have handed you what we will call a hypothetical general claim, I don't assert it is in any of these applications.

We start off with an introductory statement: "In a plow having a transverse frame and a ground working tool provided with a shank adapted to rock relatively to the frame when the plow is in operation in a foreward direction." Now, you recognize that language, of course, as being the same kind of language as introduced in the claim in suit, don't you? A. Yes.

Q. I would like for you to take this generalized claim with me and see if we can apply it to the Glencoe structure. I would like you to consider the Glencoe [1021] structure as it actually is as shown on Defendants' Exhibit 17. We of course have a plow having a transverse frame and a shank adapted to rock relative to the frame. We have that, don't we? A. Yes.

Q. Then pass to the next introductory part: "a mounting for attaching and supporting the shank of the ground working tool from the frame." We have that, don't we? A. That "from the frame" doesn't seem right; to the frame.

Q. All right. You want to change "from" to "to"? That suits me. I have no objection to changing the word. A. Isn't that more correct?

Q. That is perfectly all right, let's just change that word "from" to "to" then in that introductory part. We would have that then in Glencoe, would we not? A. Yes.

Q. Element 1, that is this mounting having element 1, "a part adapted to be fixed to the frame," do we have that? A. There surely are some parts but this isn't specific enough, doesn't tell any—

Q. Do we have a mounting having "1, a part adapted to be fixed to the frame," in Glencoe? A. "Said mounting including a part." Yes, certainly.

[1022] Q. "A part adapted to be fixed to the frame," we have that, don't we? No. 2, "a pivot pin on the fixed part." Is that present in Glencoe? A. It isn't under said mounting. The pivot pin isn't under said mounting. We are talking about said mounting up there.

The Court: He is just asking you relative to these questions here. There is no controversy for the purpose of bearing on any ultimate issue in this case respecting the element of the 798 patent or any other patents, as I understand it, and it is admitted only for the purpose of affecting the credibility or the qualifications of the witness.

Mr. Morris: It is perfectly all right. We will come forward from this point.

A. You are asking me whether there is a pivot pin present, is that it?

Q. (By Mr. Morris) I am asking you whether in Glencoe we have a pivot pin on the fixed part of the clamp. A. No.

Q. You do not have it? A. Not on the fixed part.

Q. The pivot pin is not on the fixed part of the clamp? A. You are pointing to the pivot part. Yes, it goes through the fixed part.

[1023] Q. All right. Element 4, "means for attaching the shank of the ground working tool to the movable part so that the shank and the movable part will pivot together around the pivot pin." Is that present in Glencoe? A. Yes.

Q. All right. Element 5, "spring means having connection with the fixed part and shank to permit the shank to rock and return to normal position." Is that present? A. I would think so, yes.

Q. All right, sir. So that, Mr. Fenton, if we had the patent claims specified in language of that sort—

Mr. Fishburn: Just a minute, Your Honor. I think the credibility of the witness has been tested by his recognizing the elements. Now he is going beyond that point, in my opinion.

The Court: Let him go ahead and finish his question.

Mr. Fishburn: All right, go ahead and finish it.

Q. (By Mr. Morris) If we had the mechanical elements of a claim defined in this language, as I have set them out in this hypothetical general claim, you would certainly find them all present in Glencoe, would you not?

Mr. Fishburn: I object to the witness [1024] answering that because it goes beyond the credibility of this witness. He has answered that he recognized the elements of the claim, and that is what he asked him for. That is what this exhibit is for. Anything beyond that is improper.

Mr. Morris: I am not testing credibility, I am testing qualification, Your Honor.

Mr. Fishburn: What is the difference?

Mr. Morris: I think there is a vast difference. I think mechanical elements specified broadly, as in this fashion, I am entitled to ask this witness whether or not they would be present, and I will move forward to some more points. It bears upon his power to interpret mechanical language.

The Court: That goes to the very issue in this case as to the particular specifications mentioned in the patent. I don't see where it has any probative value at all in construing particular claims of the 798 patent, because any claim could be stated probably in such general language as to cover almost any type of these devices. I don't see where it helps the Court out any, though, in arriving at the ultimate issue in this case.

Mr. Morris: If you will permit me I will take it forward. I don't want to state my conclusion [1025] until I have had a chance to ask the witness a question. But if I don't connect it up the Court can strike it out.

The Court: Well, I am certainly at this time in doubt about the admissibility of this type of evidence. I will let you put it in on the conditional basis that if it is not admissible it will be stricken from the record.

Mr. Morris: I am satisfied with that.

Q. (By Mr. Morris) Mr. Fenton, returning to my question then, if the mechanical elements of a claim were

stated in this broad fashion, as I have stated them there on Defendants' Exhibit 7, you would certainly find them all present in Glencoe, would you not? A. Yes.

Q. Now then, I would like for you to consider Claim 1 from the file wrapper, the initial Claim 1, which was rejected and canceled. I have that set out on Defendants' Exhibit 8-A. I would like for you to again check through that claim with me and see if we can find all those mechanical elements present in Glencoe.

Introductory portion of course is:

"In a plow having a frame and a ground working tool provided with a shank adapted to rock relatively to the frame when the plow is in operation in a forward [1026] direction." That is present? A. Generally, yes.

Q. "A mounting for attaching and supporting the shank of the ground working tool from the frame including," that is present, isn't it? That is, a mounting to do that general job? A. Yes.

Q. Including element 1, "a part adapted to be fixed to the frame." Is that present? A. Fixed part is there certainly.

Q. "2. A part pivotally mounted on the fixed part." If we stop right there it is present, isn't it, in Glencoe? A. "Part pivotally mounted on the fixed part."

Q. Yes. A. Yes.

Q. "Having a plate portion extending forwardly from said pivotal mounting along an end portion of the shank and in movable engagement with the fixed part." Is that present in Glencoe? A. Yes.

Q. Continuing the element, the next limitation of the element, "means on the pivotal part embracing the end portion of the shank," is that present in Glencoe? A. Yes.

Q. Then the third element. "Resilient means interconnecting [1027] said parts and engaging the end portion of the shank to hold the pivotal part in yielding contact with the fixed part so that when the shank is rocked the end portion of the shank will cause the pivotal part to move away from the fixed part along said end portion of

the shank and back to normal position with said plate portion in contact with the fixed part." Is that present in Glencoe? A. I believe it is.

Q. All right. Now then, if the claims of this patent that are here in issue were broadly stated as they were stated in that rejected Claim 1, then of course they would read on Glencoe, would they not? A. Thus far.

Q. All right, sir. Now then, I will not consider any more of them. I think that is adequate. Would you think it would be a fair conclusion, Mr. Fenton, to say that then if the present claims are to be distinguished from the prior art, and in particular Glencoe, it must be upon the basis of some specific language of those claims which defines a structure differently from what it was defined in the rejected claim we have just considered?

Mr. Gold: May I have that question read back?

(Question read.)

[1028] A. Well, I don't understand the claim language sufficiently to answer that question. Seems to me that is one for you folks to settle between yourselves.

Q. Mr. Fenton, the point is, you have undertaken to construe claim language and apply it to structures here as an expert witness in this case, and you have just agreed with me that if the language is broad as it was in the rejected Claim 1 that it would apply to Glencoe. Now, don't you think from just plain reason that if these present claims are going to be distinguished from Glencoe in any way it must be on the basis of some additional specification of structure that has been brought in here? A. I don't follow you.

Q. You don't comprehend that? A. No.

Q. All right. Well, this morning you said that you find that Glencoe has substantially the same elements in substantially the same arrangement, doing substantially the same work, as in 798, as the elements in 798. A. I don't think I ever said that, use of it.

Q. Isn't that the conclusion you reached? Isn't that true? A. Part of it is true but not all of it.

Q. You won't agree with that in full? [1029] A. No. It seems to me you went a little too far there.

Q. Wherein is that not true? A. I would have to have it read again.

Q. That in Glencoe you have substantially all of the mechanical elements performing substantially all of the functions and achieving substantially the same result as the mechanical elements in 798 as defined in the Claims 1 and 2?

Mr. Fishburn: If Your Honor please, I think that is getting into repetition, I think it has been gone over two or three times with this witness.

The Court: It might be somewhat repetitious. I think the question is proper. I don't know that the question has been answered in full; may have been answered in a series of other questions.

Mr. Fishburn: In connection with flex, and so forth, the witness pointed out the difference at least twice.

The Court: You may answer the question.

A. On second reading of that, or on the rereading, you didn't say the same arrangement of parts, you said the same mechanical elements, didn't you?

Q. (By Mr. Morris) Yes, sir. A. Then I think what you say is substantially true.

Mr. Morris: All right. That is all.

[1030] Mr. Morris: We offer in evidence the additional two exhibits, Defendants' Exhibits 7 and 8-A.

The Court: They will be admitted conditionally on the same basis on which the other exhibits were received in evidence.

(Defendants' Exhibits 7 and 8-A Were So Received in Evidence.)

The Court: We will resume the hearing on this case at 2 o'clock tomorrow afternoon. * * *

(Adjournment.)

[1031] AFTERNOON SESSION, FRIDAY, MAY 11, 1962

Mr. Morris: Your Honor, before commencing testimony, we have worked out stipulation for the appearance of Deere & Company as defendant and it has been signed and handed to the clerk.

The Court: Very well.

(Plaintiffs' Exhibits R, S and T Were Marked for Identification.)

J. C. FENTON, resumed the stand and testified as follows:

Re-Direct Examination by Mr. Gold.

Q. Mr. Fenton, we have placed on the easel three pieces of paper that have been marked Plaintiffs' Exhibits R, S and T. Will you tell us what is shown on Plaintiffs' Exhibit R? A. This is a sectional view of the 798 clamp in the static position, that is, without load being applied.

Q. And tell us what is shown in Plaintiffs' Exhibit S. A. This shows the same clamp at the full deflection position of the spring.

Q. What is the situation relative to any clearance shown in the stirrup portion in both Plaintiffs' Exhibits R, S and T? A. Well, a small clearance is indicated, enough to permit [1032] the shank to be inserted.

Q. Now tell us what is shown in Plaintiffs' Exhibit T. A. In Plaintiffs' Exhibit T is shown the deflection of the shank between the two points of support by a dotted line drawn down below the bottom of the shank and also at the top of the shank, this line indicating the direction rather than the amount of deflection.

Q. And how did the dotted lines get on that particular exhibit? A. This is a result of our test of deflection on a similar shank and our experience, perhaps, in the art.

Q. Did you place the dotted lines on that drawing yourself? A. Yes, I did.

Q. Could you tell us whether or not these three charts would have any bearing as to showing what you may have been testifying to in the last few days? A. Yes, I think

they are substantially or precisely in accord with my testimony on the same subject during the last few days of the trial.

(Plaintiffs' Exhibits U, V and W Were Marked for Identification.)

Q. (By Mr. Gold) Mr. Fenton, I have now placed on the easel some sheets of paper marked Plaintiffs' Exhibits U, V and W. Will you tell us what the Plaintiffs' Exhibit U shows. [1033] A. This shows a sectional view of the changed 798 clamp with the hinged member inverted, that is, the hinge member has been placed below the shank rather than above, as it is in the regular structure.

Q. In this particular drawing, Plaintiffs' Exhibit U, the shank is spaced downwardly from the part of the fixed member underneath the H-beam. Can you tell us why that was done? A. Well, that was done to avoid interference with the upper side of the stirrup as the shank was stressed, flexed.

The Court: I didn't quite follow you on that last explanation.

Mr. Gold: If I may, I will tell you. When it was inverted, the stirrup member—merely turning it over in the same relative position as in the Plaintiffs' Exhibit R, the stirrup would be against the rear side, rear edge of the fixed member, so in order to have it pivot it had to be moved down so there would be a little clearance there and it could swing.

Q. Now, Mr. Fenton, what is the situation relative to the shank in Plaintiffs' Exhibit U? A. The shank is located above the hinged member.

Q. And as to the clearance in that structure, what is the situation? [1034] A. You refer to the clearance at the stirrup?

Q. Yes, sir. A. In the drawing it was tried to indicate the same clearance that we had in the other view, a moderate amount of clearance.

Q. And is there any force being applied to the shank in Plaintiffs' Exhibit U? A. No.

Q. Now, tell us what is in Plaintiffs' Exhibit V. A. This shows the clamp under stress position, and fully de-

pressed, and what would be the maximum force on the clamp.

Q. And what is the position of the shank in that view as compared to the position in Plaintiffs' Exhibit U relative to the plate member? A. Well, the shank is in the same position above the plate.

Q. Now tell us what shows in Plaintiffs' Exhibit W. A. On this Exhibit W we have endeavored to show by a similar dotted line the flexing of the shank.

Q. Will you step over to the easel and point out what you are referring to. A. You can see it (indicating). We have shown a dotted line first that shows the tendency of the shank to flex downward against the hinged member, first of all [1035] to take up the clearance which—as the tool works in the ground there is an upward movement and force on the stirrup member which raises it in amount equal to the clearance. Then the force is continued and the shank at the point between the stirrup and the bolt here tends to push down on the fixed member and the point of contact will move backward to a point where there will be an equilibrium there and the greater the force the farther back this contact will move until the forces are in equilibrium. We have tried to show the same movement on the upper edge of the shank to indicate that if this is flexed downward to contact the fixed member there will be a slight deflection in the top of the shank.

Q. Mr. Fenton, I believe you said to contact the fixed member. Did you mean the fixed member? A. If I said that it was erroneous. Contacts the hinge member, the plate.

Q. Now then, how would the stress compare as to the arrangement of the structure shown in Plaintiffs' Exhibit T as compared with Plaintiffs' Exhibit W, as to location? A. In Plaintiffs' Exhibit T the stresses in this central portion of the shank will be maximum at the point of pivot just where the shank enters the stirrup and they [1036] will be distributed somewhat throughout that length. Possibly the largest stress would be right in the center of that flexed portion.

Q. What about the stress locations in the form shown in Plaintiffs' Exhibit W? A. The stress in this Exhibit

W will—as the shank is pressed down against this hinged member, there will be little or no stress on the part that is firmly in contact with the plate member. At the point where the shank is away from the plate member there will be an area of higher stress and also a similar high stress where it enters the—

Q. When we said stress we were referring to bending stress? A. Bending stress within the shank itself.

Q. Resume the witness chair now, please. Have you refreshed your recollection as to how the dial indicator was mounted on the test in the flexing of the shank in the Jeoffroy case? A. Yes, I reread the testimony.

Q. Can you tell us now how you mounted the dial indicator? A. The dial indicator was mounted on the stirrup at the rear of the hinged member and with arms extending to approximately the center the indicator was brought to bear on the bottom part of the shank.

Q. I show you the hinge member of Jeoffory, Plaintiffs' [1037] Exhibit D-1. Can you point out on that exhibit as to how the dial indicator was mounted? A. Well, this is the stirrup (indicating), and it was mounted at this point in the first case.

Q. What would have been mounted at that point? A. The attachment for the dial indicator, by means of the arms that are furnished with one of these instruments, the support was extended so that it reached the underside of the shank, touched the center of the under—

Q. Center of the under—did you complete your sentence? A. The under portion of the shank.

Q. With your knowledge of this art through the last 11 years and your long experience with agricultural implements, in your opinion would the 798 structure be obvious in view of the prior art? A. No, I don't think it would be.

Mr. Gold: That is all.

Re-Cross-Examination by Mr. Morris.

Q. Mr. Fenton, I just have a couple of questions. On all of these exhibits which have just been identified here today, beginning with R and going through W, those are all just some freehand sketches intended to indicate theoretical positions at various stages of the 798 type structure,

are they not? [1038] A. Yes; as reinforced, however, by our experience.

Q. Well, reinforced by your experience, of course your experience you are talking about has been with the Jeoffroy HT-5 and HT-5-A type clamps, has it not? A. Yes.

Q. You have stated, I believe, in connection with one of the exhibits, that the dotted line is intended to indicate direction of flex only and not magnitude? A. That is right.

Q. That is true of the other one also? A. Yes.

Q. That would be true of both Exhibit T and Exhibit W, would it not? A. Yes, sir.

Q. Just one other thing. You don't intend to say to the Court here that the actual stress lines or bending areas of the shank would be precisely as you set them out here in these dotted lines, do you? A. No.

Q. Now then, also these drawings do not attempt to show anything that might happen insofar as flex of the hinge member itself is concerned, do they? A. They do not, no, sir.

Q. And you have not attempted to measure or compute that at any time, have you? [1039] A. No.

Q. So this then again would be a theoretical representation of flex in the shank alone? A. The shank, yes, sir.

Mr. Morris: That is all, thank you, sir.

Re-Direct Examination by Mr. Gold.

Q. Mr. Fenton, is it your opinion that the structure shown in the drawings would flex in the manner shown in Plaintiffs' Exhibits T and W? A. Yes, sir.

Mr. Gold: That is all.

(Witness excused.)

Mr. Fishburn: We would like to introduce in evidence Plaintiffs' Exhibits S, T, U, V and W.

Mr. Morris: No objection.

The Court: Very well. They will be admitted.

(Plaintiffs' Exhibits S, T, U, V and W Were Received in Evidence.)

Mr. Fishburn: We would also like to introduce in evidence the interrogatories if that is necessary, Your

Honor. What is your rule with respect to the interrogatories? They are filed in this case and answers filed. Do you wish those given exhibit numbers?

[1040] The Court: They are introduced in the case, admitted in the case unless there is some objection, of course, which can be ruled on as pertains to particular parts of the questions or answers. You can consider them introduced if you want to, or you can introduce them.

* * *

[1041] The Court: * * * They are generally considered part of the pleadings in the case, they are in the case.

* * *

Mr. Fishburn: Then we will just consider them in evidence as pleadings?

The Court: If that is agreeable to both sides, they will be so considered.

Mr. Morris: That is all right.

Mr. Fishburn: I would like to offer in evidence the film which was shown before as the Plaintiffs' Exhibit X.

[1042] The Court: Any objection?

Mr. Morris: No, Your Honor. Of course 75 percent of it is relatively immaterial to the case, but I have no objection to it.

The Court: Very well. It will be admitted.

(Plaintiffs' Exhibit X Was Received in Evidence.)

* * *

[1045] Mr. Fishburn: That is all plaintiffs' rebuttal, Your Honor.

Mr. Morris: Defendants will offer no surrebuttal.

* * *

(Adjournment.)

# United States Court of Appeals

FOR THE EIGHTH CIRCUIT.

## No. 17,441.

CIVIL.

JOHN DEERE COMPANY OF KANSAS CITY,
a Corporation and DEERE & COMPANY,
a Corporation,
*Appellants,*

vs.

WILLIAM T. GRAHAM, and GRAHAM PLOW, INC.,
*Appellees.*

APPEAL FROM THE DISTRICT COURT OF THE UNITED STATES
FOR THE WESTERN DISTRICT OF MISSOURI,
WESTERN DIVISION.

INDEX

Volume III—Exhibits


Plaintiffs' Exhibit A, Graham Patent No. 2,627,798 ..... 577
Plaintiffs' Exhibit K, Pamphlet of the Deere 900 Series ..... 589
Plaintiffs' Exhibit O, File Wrapper and Contents of Patent 2,739,518 Granted March 27, 1956, to Elmer A. Rolf ..... 593
Plaintiffs' Exhibit P, Soft Copy of the Rolf Patent No. 2,739,518 629
Plaintiffs' Exhibit Q, Opinion Letter of Judge Jos. B. Dooley, Order, Findings of Fact, Conclusions of Law and Judgment 633

Plaintiffs' Exhibit R, Sectional View of the 798 Clamp in the Static Position ..... 643
Plaintiffs' Exhibit S, 798 Clamp at the Full Deflection Position of the Spring ..... 645
Plaintiffs' Exhibit T, Showing Deflection of the Shank Between the Two Points of Support by Dotted Line Drawn Down Below the Bottom of the Shank and at Top of Shank 647
Plaintiffs' Exhibit U, Sectional View of the Changed 798 Clamp with the Hinged Member Inverted ..... 649
Plaintiffs' Exhibit V, Clamp under Stress Position and Fully Depressed ..... 651
Plaintiffs' Exhibit W, Dotted Line Showing the Flexing of the Shank ..... 653
Defendants' Exhibit 1-A, Colored Drawing of the Cockshutt Clamp ..... 655
Defendants' Exhibit 1-B, Colored Drawing of the Cockshutt Clamp ..... 657
Defendants' Exhibit 4, File History of the Patent 798 ..... 659
Defendants' Exhibit 5, Book of Prior Art Patents ..... 705
Defendants' Exhibit 7, Hypothetical General Claim ..... 795
Defendants' Exhibit 8A, Claim 1 from 798 File Wrapper ..... 796
Defendants' Exhibit 8D, Claim 7 from the 798 File History ..... 797

## Volume IV—Exhibits

Defendants' Exhibit 30, "No. 600 Tool Carrier Survey" by E. H. Lee, March, 1953, Product Research Department Copy ..... 799
Defendants' Exhibit 31, "No. 600 Tool Carrier Survey" by E. H. Lee, April, 1953, Product Research Department Copy 823
Defendants' Exhibit 32, Correspondence Produced During the Taking of Depositions of the Employees at Moline, Illinois, of Deere & Company ..... 844
Defendants' Exhibit 33-A, Drawing XCA-318-N ..... 877
Defendants' Exhibit 33-B, Drawing XCA-318 ..... 879
Defendants' Exhibit 34-A, Drawing Attached to Letter of October 23, 1953, Part of Correspondence with Exhibit 32 ..... 881
Defendants' Exhibit 34-B, Another Drawing Attached to Same Letter ..... 883
Defendants' Exhibit 38, Drawing XCL-134-N ..... 885
Defendants' Exhibit 39, Drawing XCL-135-N ..... 887
Defendants' Exhibit 41, Drawing Attached to Letter in Correspondence, Letter Being Dated December 8, 1953 ..... 889
Defendants' Exhibit 44, Copy of the Hunter Patent, No. 2,777,378 ..... 891
Defendants' Exhibit No. 45-A, Drawing of the Fixed Member 895
Defendants' Exhibit No. 45-B, Drawing of the Pivoted Member 897
Defendants' Exhibit 46, Drawing of Final Production Model of the 100 Series ..... 899

Defendants' Exhibit 52-A, Photograph of a Part of the Test Setup ..... 901
Defendants' Exhibit 52-B, Photograph of a Part of the Test Setup ..... 901
Defendants' Exhibit 52-C, Photograph of a Part of the Test Setup ..... 903
Defendants' Exhibit 52-D, Photograph of a Part of the Test Setup ..... 903
Defendants' Exhibit 53, Judge Dooley's Letter Opinion Dated September 9, 1953, in Civil Action No. 1469 in the United States District Court for the Northern District of Texas, Amarillo Division, Styled Jeoffroy Manufacturing, Inc., v. Graham ..... 905
Defendants' Exhibit 54, Judge Dooley's Letter Opinion to Counsel in the Same Case Dated December 18, 1953 ..... 916

PLAINTIFFS' EXHIBIT A

Plt. Ex. A

577

Feb. 10, 1953 W. T. GRAHAM 2,627,798

CLAMP FOR VIBRATING SHANK PLOWS

Filed Aug. 27, 1951 4 Sheets-Sheet 1

Fig. 1.

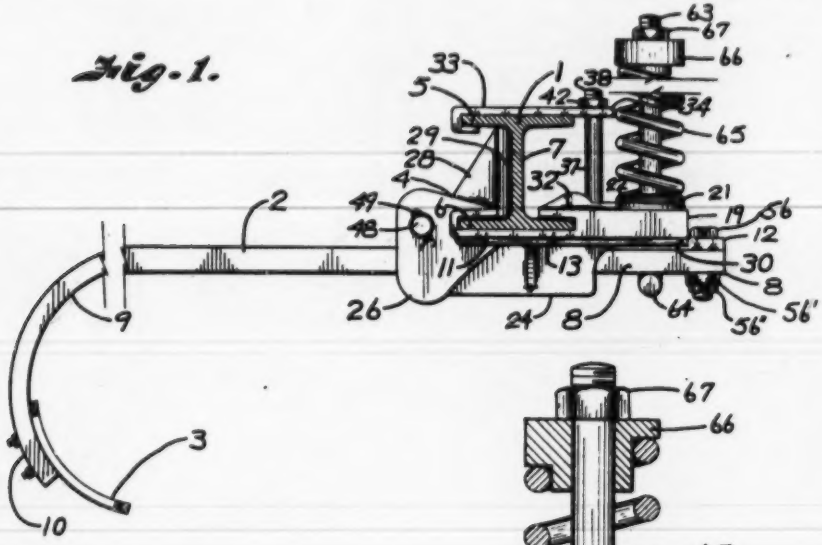


Fig. 2.

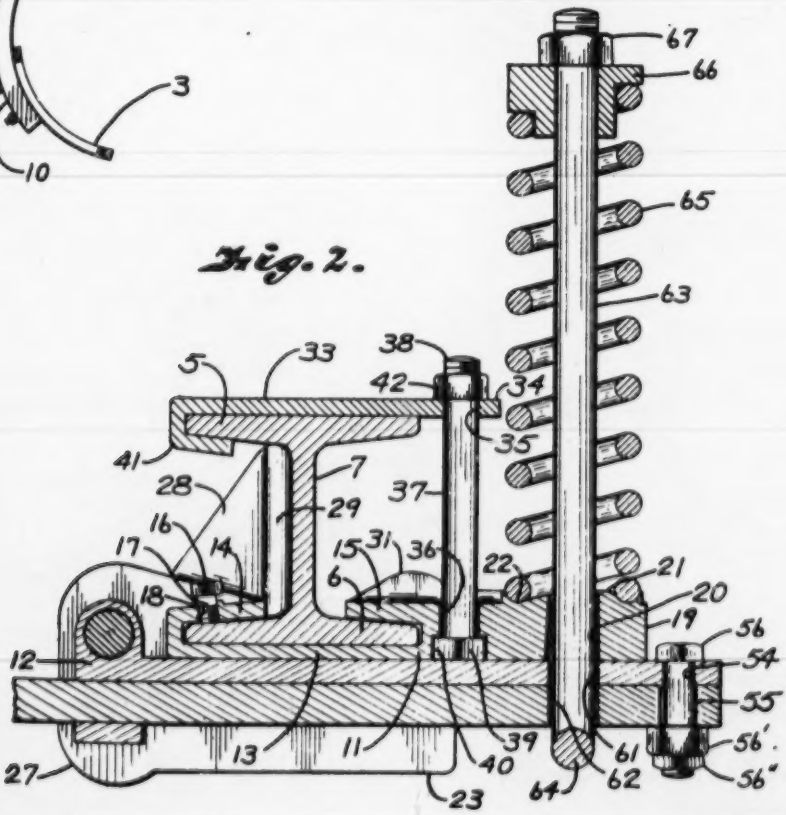


INVENTOR.
William T. Graham.
BY
Fishburn & Mullendore

579

Feb. 10, 1953 W. T. GRAHAM 2,627,798

CLAMP FOR VIBRATING SHANK PLOWS

Filed Aug. 27, 1951 4 Sheets-Sheet 2

Fig. 3.

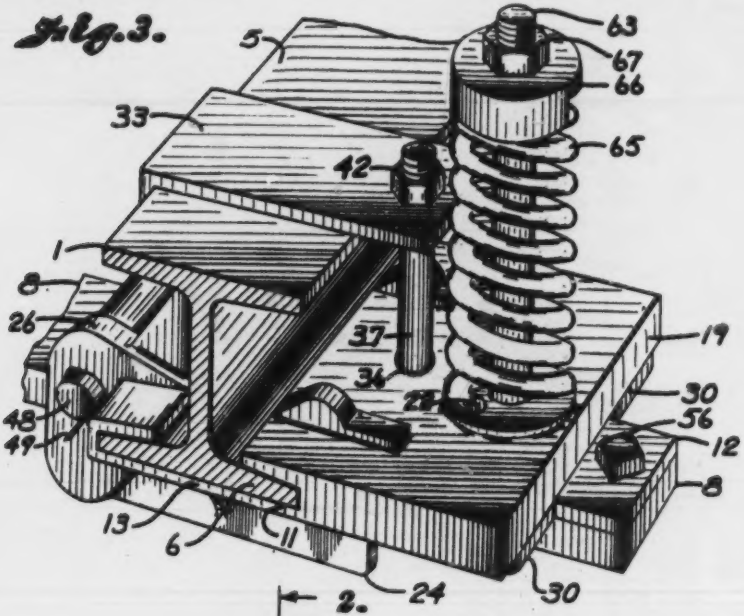


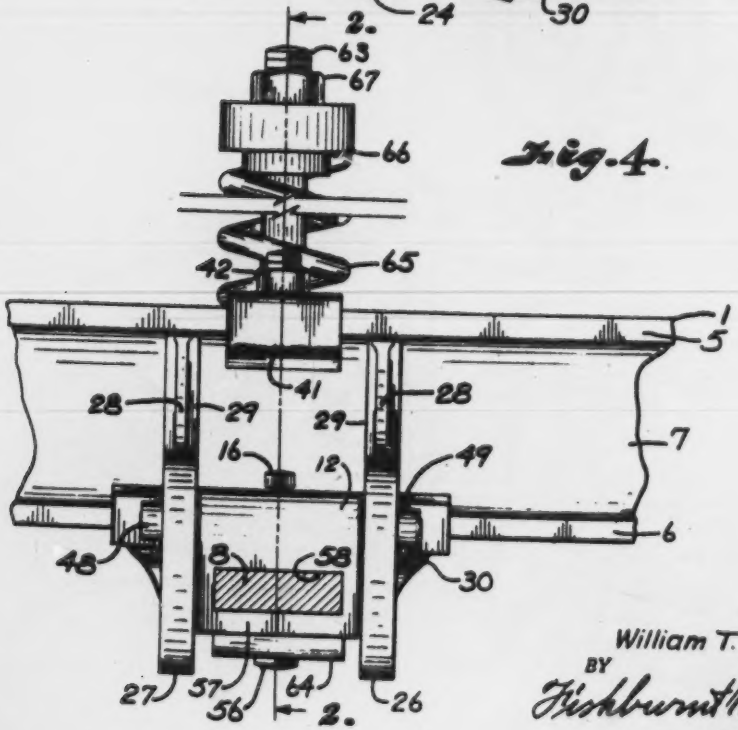


Fig. 4.

INVENTOR.
William T. Graham.
BY
Fishburn & Mullendore
ATTORNEYS.

581

Feb. 10, 1953 W. T. GRAHAM 2,627,798

CLAMP FOR VIBRATING SHANK PLOWS

Filed Aug. 27, 1951 4 Sheets-Sheet 3

Fig. 5.

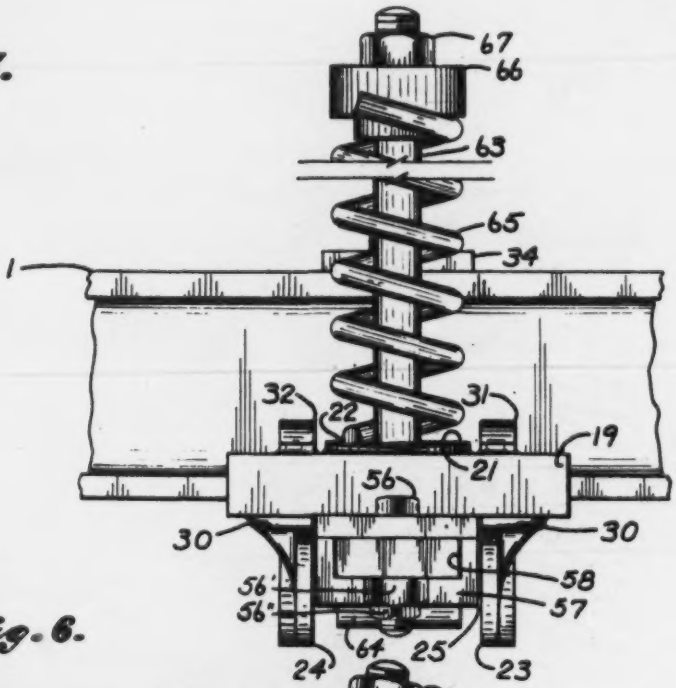


Fig. 6.

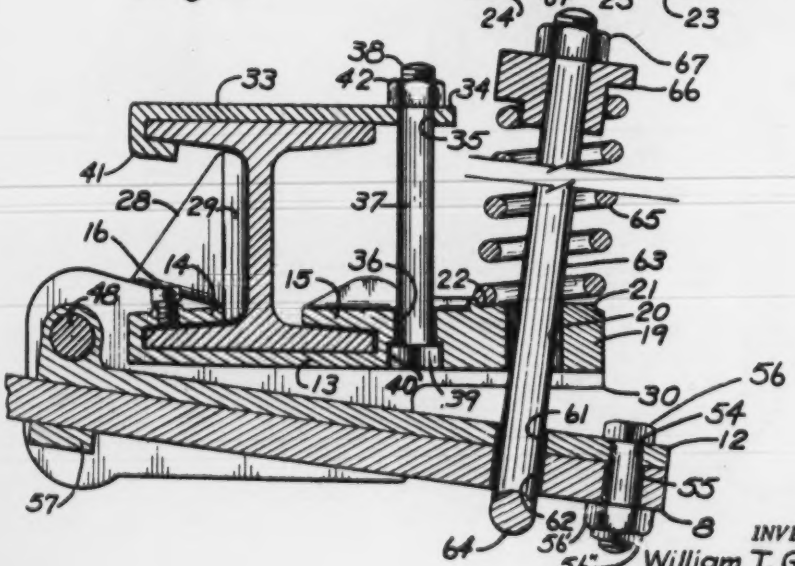


INVENTOR.
William T. Graham.

BY
Fishburn & Mullendore

ATTORNEYS.

5-83

Feb. 10, 1953 W. T. GRAHAM 2,627,798

CLAMP FOR VIBRATING SHANK PLOWS

Filed Aug. 27. 1951 4 Sheets-Sheet 4

Fig. 7.

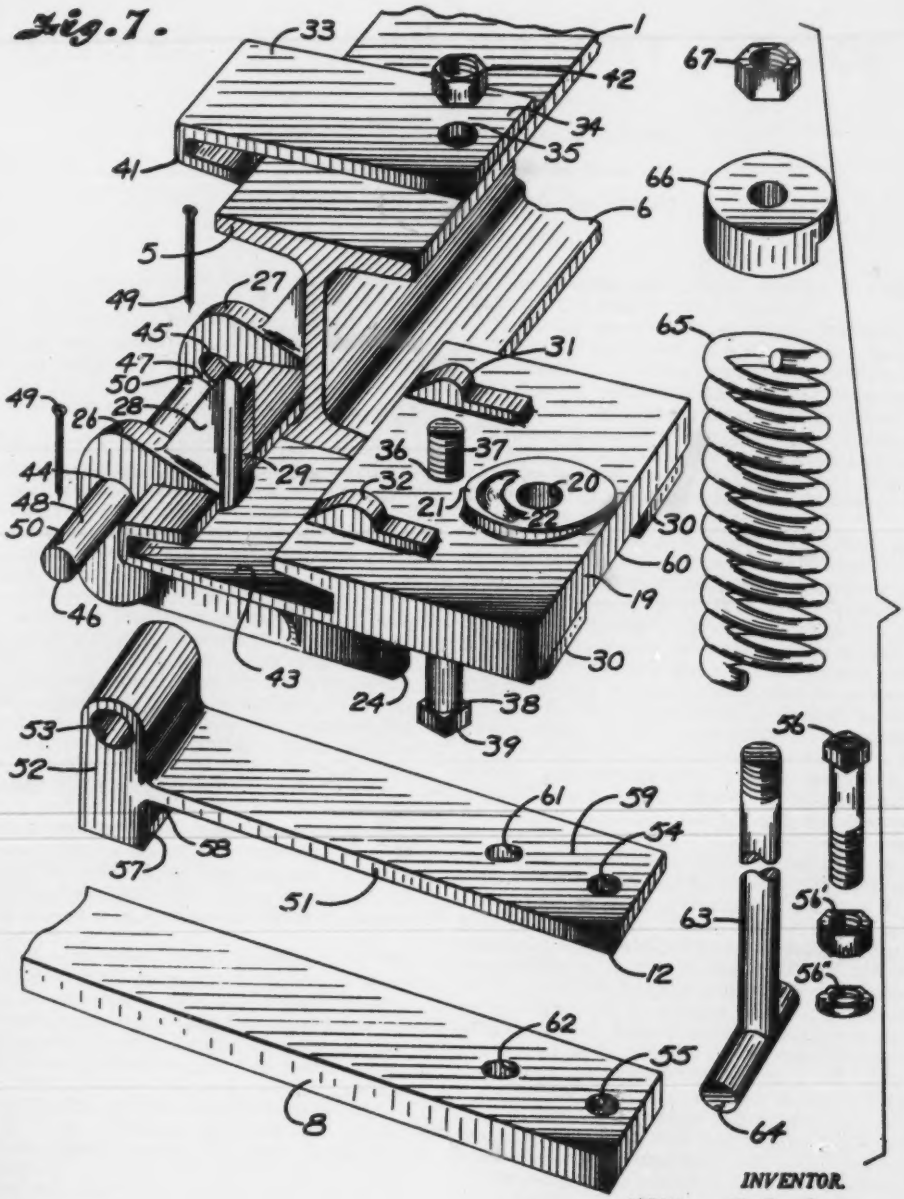


INVENTOR.
William T. Graham.
BY
Fishburn & Mullendore
ATTORNEYS.

585

# UNITED STATES PATENT OFFICE

2,627,798

## CLAMP FOR VIBRATING SHANK PLOWS

William T. Graham, Amarillo, Tex.

Application August 27, 1951, Serial No. 243,893

2 Claims. (Cl. 97—184)

1

This invention relates to a plow of a type including ground conditioning tools that are carried on shanks having support on a mobile frame and which work under the surface to heave and break the soil and form alternate ridges and furrows having exposed surfaces composed of sod, straw and clods normally occurring on a field.

When the field contains rocks and other obstructions, it is desirable to mount the shanks of the ground working tools for rocking movement on the frame of the plow so that the ground working tools will pass freely over the obstructions and return to normal plowing position without injury to the plow.

It is therefore the principal object of the present invention to provide a simple and reliable mounting for attaching the shanks of the ground working tools to the mobile frame whereby the shanks may rock when necessary and vibrate under action when the plow is working in rocky and/or heavy soils. It is also an object of the invention to provide a mounting which includes a fixed part and a movable part pivotally connected with the fixed part and having a shank attaching portion to which the shank is rigidly secured and resiliently retained on the fixed part.

In accomplishing these and other objects of the invention hereinafter pointed out, I have provided improved structure, the preferred form of which is illustrated in the accompanying drawings, wherein:

Fig. 1 is a vertical section through a frame member of a plow showing a mounting constructed in accordance with the present invention for resiliently attaching the shanks of the ground working tools whereby the shanks are adapted to rock relatively to the frame when passing over an obstruction and return to normal position after the obstruction has been passed.

Fig. 2 is an enlarged longitudinal section through the frame member, the plow shank and the mounting by which the shank is pivotally connected with the frame member and resiliently held in normal plowing position, the section being taken on the line 2—2 of Fig. 4.

Fig. 3 is a perspective view of the structure disclosed in Fig. 2.

Fig. 4 is a rear elevational view, with the shank being shown in cross section.

Fig. 5 is a front elevational view.

Fig. 6 is a longitudinal section similar to Fig. 2 but showing the shank and movable part of the mounting rocked relatively to the fixed part of the mounting.

Fig. 7 is a perspective view of the parts shown

2

in disconnected and spaced relation to better illustrate the construction thereof.

Referring more in detail to the drawings:

1 designates a part of a plow frame to which the shanks 2 of the ground working tools 3 are attached by mountings generally indicated 4 and constructed in accordance with the present invention. Since all of the tool, shank and mounting assemblies are of like construction, only one of them is illustrated and described, it being understood that the plow may include one or more of the ground working devices.

The frame member 1, which composes a part of a plow frame, is illustrated as comprising an I-beam having upper and lower horizontally arranged flanges 5 and 6 that are interconnected by a vertical web 7. The shank 2 is formed of metal bar stock of substantially rectangular cross section and is of a width and thickness to provide the necessary strength and a certain amount of resiliency. The bar stock is shaped to provide a substantially straight end portion 8 extending in the direction of travel of the machine and a rearwardly and downwardly curved portion 9 terminating in a forwardly curved end 10 to carry the ground working tool 3. The straight end 8 of the shank extends transversely with respect to the frame member 1 and is adapted to rock transversely relatively to travel of the plow.

Each mounting 4 includes a fixed part 11 and a movable part 12. The fixed part 11 has a substantially flat plate portion 13 substantially corresponding in length to the width of the lower flange 6 of the I-beam and which is closely engaged therewith by flanges 14 and 15 extending over the upper face of the lower flange 6, as best shown in Fig. 2. One of the flanges, for example the flange 14 preferably carries a set screw 16 that has its shank 17 threaded in an opening 18 of the flange to engage the upper face of the flange 6 and draw the plate portion 13 of the fixed part into engagement with the lower face of the flange and assure a firm connection with the I-beam.

Projecting forwardly from the plate portion 13 and flange 15 is a relatively thicker extension 19 provided with a slot-like opening 20 extending through a boss 21 that forms a spring seat 22. Depending from the under side of the plate portion 13 and extending forwardly of a portion of the extension 19 are flanges 23 and 24 spaced apart to form a downwardly opening channel or way 25 therebetween and in which the movable part 12 of the mounting is adapted to rock along with the forward end portion 8 of the shank 2. Projecting rearwardly from the spaced flanges

23 and 24 are ears 26 and 27 that extend upwardly over the flange 14 and carry webs 28 that support abutments 29 which engage the rear face of the I-beam web 7 for distributing forces acting on the shank to the upper portion of the I-beam. The under side of the plate extension 19 may be reinforced by bosses 30 that extend forwardly on opposite sides of the channel or way 25, as shown in Figs. 5 and 7. It is obvious that the flange 14 of the fixed part is reinforced by the ears and webs 28. To reinforce the forward flange 15 the upper face of that flange and the extension 19 may be provided with spaced ribs 31 and 32, as best shown in Fig. 7.

In order to further attach the fixed part to the I-beam, the mounting may include a hook member 33 having a plate portion 34 that extends over the upper face of the upper I-beam flange 5 and which has an opening 35 aligning with an opening 36 in the forward extension of the fixed part to pass the shank 37 of a bolt 38, the head 39 of the bolt being countersunk within a recess 40 that is formed on the under face of the extension 19, as best shown in Figs. 2 and 6. The opposite end of the plate portion 33 has a downwardly and forwardly extending hook 41 that engages under the upper flange of the I-beam. The bolt 38 has a nut 42 threaded on the shank thereof to draw the parts tightly against the I-beam as shown in Figs. 2 and 6.

The ears 26 and 27 are provided above the level of the underface 43 of the plate portion 13 with registering openings 44 and 45 to mount the ends 46 and 47 of a transverse pin 48, the pin being retained in position by cotter pins 49 extending through suitable openings 50 in the projecting ends of the pin.

The movable part 12 includes an elongated plate portion 51 having a width to move freely within the channel or way 25 and the rear end has an upwardly extending transverse ear 52 that is provided with an opening 53 for passing the pin 48 to pivotally connect the movable part 12 with the fixed part 11. The plate portion 51 extends forwardly of the way and beyond the forward end of the extension 19 to accommodate an opening 54 that registers with a corresponding but slightly larger opening 55 in the end portion 8 of the shank 2 to pass a fastening device 56. The movable part also includes a depending loop 57 having a rectangular passageway 58 substantially conforming to the cross sectional shape of the end portion of the shank whereby the end portion 8 of the shank is passed therethrough and embraced by the loop portion to rock with the movable part on the pivot pin 48. The nut 56' of the bolt may be set up snug but is left sufficiently loose to permit slight longitudinal movement of the end portion of the shank relatively to the pivotal part of the clamp. The nut 56' is backed by a jam nut 56'' to prevent turning thereof after the nut 56' has been set.

The plow shank and movable part 12 of the mounting are resiliently retained in normal position with the upper face 59 of the plate portion 51 in clamping engagement with the under face 60 of the fixed part 11. This is effected by a resilient connection as now to be described. The end portion 8 of the shank and plate portion 51 of the movable part have elongated openings 61 and 62 that register with the slot-like opening 20 of the fixed part, as shown in Fig. 2. Extending through the registering openings 60, 61 and 20 is a rod 63 having a transverse head 64 on its lower end engaging under the end portion 8 of



the plow shank. Sleeved over the rod and having one end engaging the spring seat 22 is a coil spring 65 having its upper end connected with the upper end of the rod by a washer-like spring seat 66 retained on the upper end of the rod by a nut 67, the nut being tightened on the rod to compress the spring 65 sufficiently to retain the shank 2 and movable part 12 in normal position but to allow rocking movement of the movable part when the shank is rocked. This rocking movement of the shank will cause the movable part 12 to pivot away from the fixed part 11 along with the forward end portion 8 of the shank 2 to effect compression of the spring 65 so that the stored up action in the spring will return the shank and movable part of the clamp to normal position with the plate portion 51 resiliently clamped against the fixed part 11 of the mounting as shown in Fig. 2.

In assembling the mounting, the fixed part 11 is slid over an end of the I-beam 1 and moved to the desired location thereon along with other of the mountings not shown. The hook member 33 is then placed over the upper flange 5 of the I-beam with the hook 41 engaged with the flange after which the bolt 38 is applied and the nut 42 tightened to draw the fixed part 11 tightly against the lower flange 6 of the I-beam. The set screw 16 may then be tightened to further secure the fixed part of the mounting. The end portion 8 of the plow shank 2 is then passed through the opening 57 of the loop portion of the movable part 12 until the opening 55 registers with the opening 54. The fastening device 56 is then inserted through the registering openings 54 and 55 to secure the shank to the movable part of the mounting. The movable part 12 and forward end 8 of the shank are then placed within the downwardly opening way 25 of the fixed part 11 and the pivot pin 48 is passed through the openings 44, 45 and 53 in the registering ears 26, 27 and 52 after which the cotter pins 49 are inserted in the openings 50.

The rod 63 is then passed through the openings 61, 62, and 20 and the coil spring 65 is sleeved thereover to engage the seat 22. The spring seat 66 is then applied over the upper threaded end of the rod to engage the upper end of the spring after which the nut 67 is applied to compress the spring and draw the movable part 12 into clamping engagement with the fixed part 11, sufficient tension having been applied to normally retain the shank and tool 3 in plowing position.

When the plow is in operation the ground working tool 3 may engage an obstruction. However, the tool is free to ride over the top of the obstruction upon upward rocking movement of the shank 2, the shank moving with the movable part 12 of the mounting about the axis of the pivot pin 48 so that the forward end 8 of the shank moves downwardly to cause the rod 63 to further compress the spring 65 whereby the spring 65 is enabled to return the shank 2 and movable part 12 to their normal position after the ground working tool has passed over the obstruction.

During operation of the plow, there is also a vibratory or pumping movement of the ground working tool that acts to reduce the draft and facilitate operation of the ground working tool in plowing up and heaving the soil to form the ridges and furrows. The pumping action of the ground working tools work the fine soil downwardly to form the seed bed and the larger clods, straw and the other mulching materials are

worked to the surface for covering the fine soil and serving as a mulch to preserve the moisture.

From the foregoing it is obvious that I have provided a plow structure wherein the shanks of the ground working tools are attached to the plow frame in a manner to permit the desired rocking action of the plow shanks in a simple and efficient manner and without producing destructive strains on the plow frame or excessive wear on the mounting parts.

What I claim and desire to secure by Letters Patent is:

1. In a plow having a frame and a ground working tool provided with a shank adapted to rock relatively to the frame when the plow is in operation in a forward direction, a mounting for pivotally attaching and supporting the shank of the ground working tool to a transverse member of the frame, the mounting including a fixed member adapted to be fixed to the transverse member of the frame and having a longitudinally extending underface terminating forwardly of the transverse member to which said mounting is adapted to be fixed, the fixed member having ears extending rearwardly from said underface at the sides thereof, a shank attaching member having an elongated plate portion provided with an upper face corresponding with and normally in contact with said underface of the fixed member and provided with a longitudinally extending underface in engagement with a corresponding upper face of the shank whereby the plate portion of the shank attaching member is between the shank and the fixed member, means connecting the elongated plate portion with the shank for maintaining the upper face of the shank in constant continuous contact with the underface of said plate portion of the shank attaching member, a transverse pin pivotally connecting the shank attaching member to the fixed member at the rear ends of said normally contacting faces and whereon the shank attaching member pivots upon rocking movement of the shank, a coil spring having one end seated on the forward end of the fixed member, and means having connection with the forward end of the shank and with the other end of the coil spring whereby the spring yieldably maintains said normal contact of the upper face of the plate portion of the shank attaching member with the underface of the fixed member to maintain the normal plowing depth of the ground working tool.

2. In a plow having a frame and a ground working tool provided with a shank adapted to rock relatively to the frame when the plow is in operation in a forward direction, a mounting for pivotally attaching and supporting the shank of the ground working tool to a transverse member of the frame, the mounting including a fixed member adapted to be fixed to the transverse member of the frame and having a longitudinally extending underface terminating forwardly of the transverse member to which said mounting is adapted to be fixed, the fixed member having ears extending rearwardly from said underface at the sides thereof, a shank attaching member having an elongated plate portion provided with an upper face corresponding with and normally in contact with said underface of the fixed member and provided with a longitudinally extending underface in engagement with a corresponding upper face of the shank whereby the plate portion of the shank attaching member is between the shank and the fixed member, said shank attaching member having a lug extending upwardly between said ears of the fixed member and disposed at the rear end of the plate portion and above the plane of the underface of the fixed member, said shank attaching member having depending means embracing the shank at the rear end of said plate portion, a bolt connecting the forward end of the plate portion with the forward end of the shank and cooperating with the shank embracing means in maintaining the upper face of the shank in constant continuous contact with the underface of said plate portion, a pivot pin extending transversely through said lug and carried by the ears with the axis thereof above the plane of the underface of the fixed member whereby the normally contacting face of the shank attaching member immediately moves out of contact with and away from the face of the fixed member when the shank attaching member pivots upon rocking movement of the shank, a coil spring having one end seated on the forward end of the fixed member, and means having connection with the forward end of the shank and with the other end of the coil spring whereby the spring yieldably maintains said normal contact of the upper face of the plate portion of the shank attaching member with the underface of the fixed member.

WILLIAM T. GRAHAM.

REFERENCES CITED

The following references are of record in the file of this patent:

UNITED STATES PATENTS

| Number | Name | Date |
|---|---|---|
| 417,775 | Drader et al. | Dec. 24, 1889 |
| 2,014,451 | Pfeifer | Sept. 17, 1935 |
| 2,493,811 | Graham | Jan. 10, 1950 |

FOREIGN PATENTS

| Number | Country | Date |
|---|---|---|
| 57,391 | Denmark | Mar. 18, 1940 |
| 111,910 | Australia | Nov. 8, 1940 |

PLAINTIFFS' EXHIBIT K 589

FOR

# PROFESSIONAL RESULTS

ON EVERY TILLAGE JOB . . .

## No. 650 Series

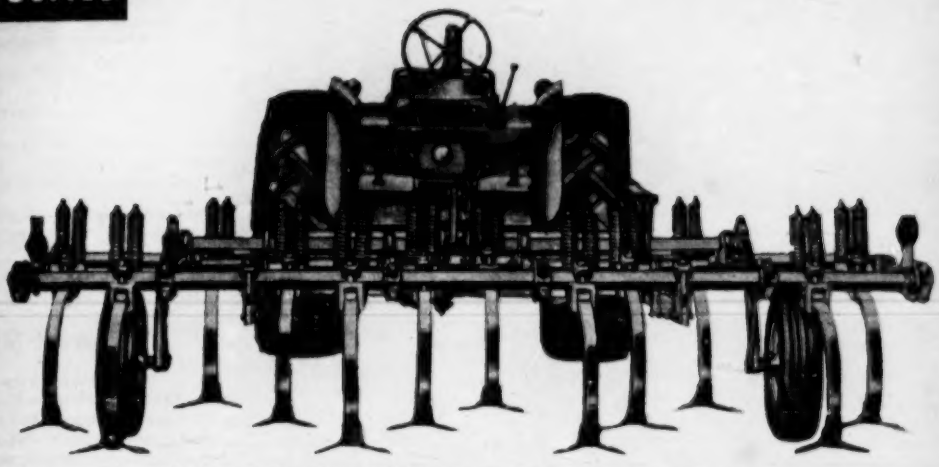

2- OR 3-BAR CARRIERS—BUILT IN 12- AND 16-FOOT SIZES

## o. 900 Series

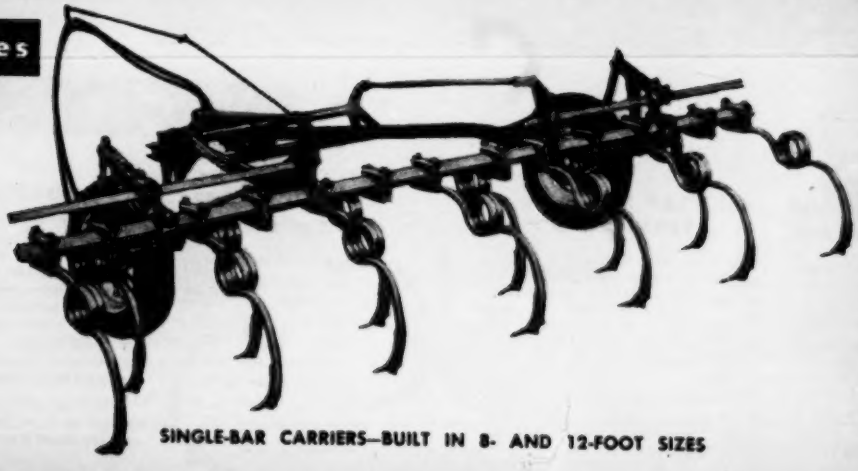

SINGLE-BAR CARRIERS—BUILT IN 8- AND 12-FOOT SIZES

590

# DO BETTER WORK...IN

## CUT COSTS WITH A VERSATI

### No. 650

Shown at left is the 16-foot John Deere No. 650 Tool Carrier equipped with hydraulic Power Trol and flat cushion spring standards. It's a rugged, big-capacity outfit with plenty of clearance for trashy conditions.

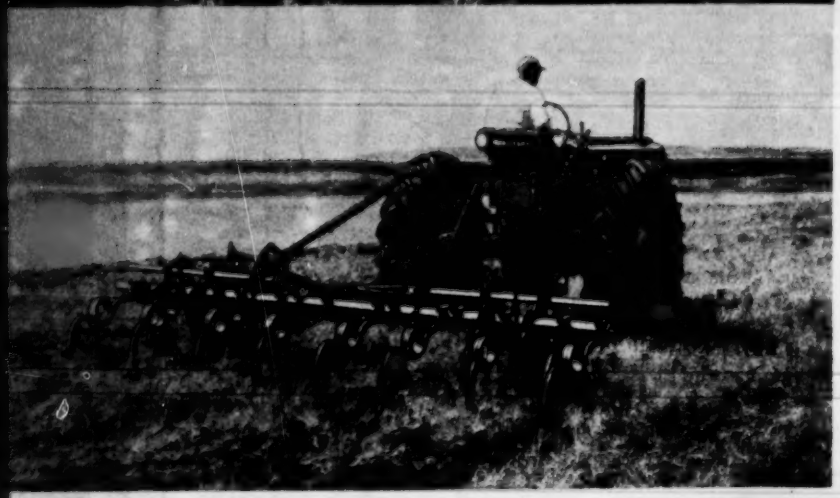

### No. 900

Pictured at left is the single-bar 12-foot John Deere No. 900 Tool Carrier equipped with mechanical power lift and double-coil spring standards. It's also available for hydraulic operation or with hand lift.

## COMPLETE WOR

### FLAT SPRING STANDARDS

At Left: John Deere Flat Spring Standards or Cushion Spring Standards and stub bars are furnished in sets to create a 3-bar No. 650 Carrier with a diagonal tooth pattern. The cushion relief feature reduces breakage in rocky field conditions.

Working points include: 12-, 14-, and 16-inch chisels . . . 14- and 16-inch spikes . . . and 6- through 18-inch sweeps.

### DOUBLE-COIL SPRING STANDARDS

At Left: John Deere Heavy-Duty, Double-Coil Spring Standards. Front- and rear-type standards are furnished in sets to provide 4 rows of standards on the two main frame bars. Clamps are Quik-Tatch for ease of handling. Double-Coil Spring Standards are made of heavy-duty 1-1 4-inch steel.

Working points include: 12-inch chisels or tool bar sweeps in sizes ranging from 6 to 14 inches.

591

# CREASE CROP YIELDS...

## JOHN DEERE TOOL CARRIER

HERE, with one implement, you can establish an entire tillage system that will increase crop yields through better work and soil conservation practices. Used throughout the entire working season, you have versatile tool that cuts the cost of tillage on every job.

### Wide Variety of Jobs

Versatile John Deere Tool Carriers do outstanding rk on a wide variety of tillage jobs. They prepare seedbeds . . . kill weeds . . . work summer-fallow . . . till the subsurface . . . break the subsoil . . . rough up fields to reduce wind erosion . . . and renovate alfalfa or pasture land.

Along with these jobs you can use a John Deere Tool Carrier as an effective conservation implement. They conserve moisture and reduce wind and water erosion.

What's more, accurate planting attachments are available for planting corn or cotton. What more could you ask for in one implement?

Bring on your rough fields . . . your gumbo . . . your heavy stubble . . . your stony fields . . . your hard-baked soils . . . your tough pasture land—a rugged John Deere Tool Carrier is designed, built, and equipped to meet every condition. Their husky construction provides steady, dependable operation with minimum upkeep costs.

### Increased Yields

Many farmers report increased yields by using a John Deere Tool Carrier along with other good soil conservation practices. A wide variety of Quik-Tatch working equipment permits maximum efficient use of a John Deere Carrier by adapting it to so many jobs.

On light tillage work, John Deere Carriers are equipped with either flat cushion spring standards, flat spring standards, or double-coil spring standards. Sweeps, chisels, and spikes, meet every ground-working requirement.

Equipped with "live-action," vibrating spring standards and sweeps your John Deere Carrier does a fast, clean job of killing quack grass, Russian thistle, water weeds, horsetail, and other tough weeds. You can prepare seedbeds in spring . . . work summer-fallow continuously . . . work up stubble fields . . . mulch stubble to absorb and hold moisture and reduce wind and water erosion . . . rough up fields to bring clods to the surface, sifting fine soil to the bottom to reduce blowing . . . and work up hard, baked fields after excessive rainfall.

With reversible chisels or spikes and spring standards you can break up shallow hardpan or renovate alfalfa or pasture.

### Deep Work

Equipped with heavy-duty stiff standards and heavy reversible chisel points, John Deere Tool Carriers do an excellent job of subsoiling. By working around hills or slopes with this outfit you can open up the subsoil to retain water, providing a reservoir for the next crop. What's more, you control water runoff and provide a better rootbed for your crops. The number of chisels you use and depth of operation depend upon the tractor power available.

### Subsurface Tillage

Equipped with stiff standards, 30-inch sweeps, and with rolling coulters where trash or stubble is heavy, John Deere Tool Carriers slice off weeds after they have gained a good growth but before they go to seed. This method kills all vegetation by cutting off feeder roots but leaves weeds and stubble trash "anchored" to the ground by the surface roots to reduce blowing. A heavy, dead mulch completely covers the ground, reducing moisture loss and holding rain or snow to penetrate where it falls. Water erosion is checked and valuable humus is added to the soil.

Quik-Tatch clamps which hold spring teeth and stiff standards to the bars make it a simple job to change from one tillage job to another or to change spacing of various tools along the tool bar. These Quik-Tatch clamps also make it easy to add or remove working attachments as field conditions require.

Get more details on the John Deere Tool Carrier you need on the inside page.

## ING EQUIPMENT

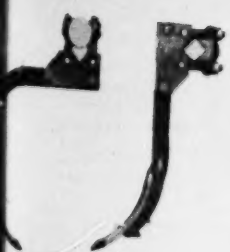

### STIFF STANDARDS

John Deere Stiff Standards are made of 1-1 4 x 2-1 4-inch heat-treated steel. You can work deep with these rugged, stiff standards. A complete line of working points is available on every job and field condition. Chisels in 12, 14, and 16 inches . . . 14- and 16-inch spikes . . . and sweeps from 6 to 18 inches are available.

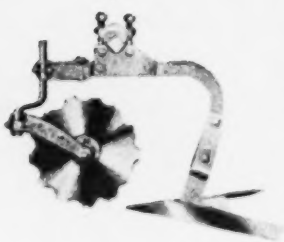

### SUBSURFACE STANDARDS

John Deere Subsurface Sweep Standards handle shallow work at depths to 6 inches. A friction trip release reduces possibility of damage when striking a stone or other obstruction. Greater fore-and-aft clearance is provided. These standards are equipped with 30-inch sweeps for use in 24-, 26- or 28-inch spacing. Notched or plain coulters are available for heavy trash conditions.

When you choose
the RIGHT TOOL...
...You'll do
the JOB RIGHT

PLAINTIFFS' EXHIBIT O

DEPARTMENT OF COMMERCE
UNITED STATES PATENT OFFICE

*To all persons to whom these presents shall come, Greeting:*

THIS IS TO CERTIFY that the annexed is a true copy from the records of this office of the File Wrapper and Contents of Patent 2,739,518, granted March 27, 1956, to Elmer A. Rolf, assignor to Glencoe Manufacturing Company, for Shank Holder.

IN TESTIMONY WHEREOF I have hereunto set my hand and caused the seal of the Patent Office to be affixed at the City of Washington, this thirtieth day of April, in the year of our Lord one thousand nine hundred and fifty-six and of the Independence of the United States of America the one hundred and eightieth.

/s/ Robert C. Watson
Commissioner of Patents.

Attest:

/s/ M. K. Hansen
Certifying Officer
(Seal)

PATENT No. 2739518

Dated Mar. 27, 1956

NUMBER (Series of 1948)
283174
DIV. X Class IV

Division of App., No. _____, filed _____, 19____ Patent No. _____ Granted _____, 19____

Name Elmer A. Rolf, Assessor to Glencoe Manufacturing Company, Glencoe, Minnesota, a Corporation of Minnesota, of Glencoe, State of Minnesota, Invention Shank Holder.

Title Approved
/s/MPS
Examiner

Original

APPLICATION FILED COMPLETE, April 19, 1952
185717

Parts of Application Filed

| | |
|---|---|
| Petition, Specification, Oath, First Fee $30 1 sheets Drawings, | April 19, 1952 |

Examined and passed for Issue August 22, 1955. M. P. Smith, Exr. Class. Div. IV.

Notice of Allowance August 24, 1955, by Commissioner.

Final Fee $30.00 February 21, 1956.

Attorney Williamson, Williamson, Schroeder & Adams, 950 Pillsbury Bldg., Minneapolis, Minnesota.
Associate Attorney

No. of Claims Allowed 2 Print Claims 1 in O.G. Class 97-47-84.

This invention relates to shank holders for holding the shanks of agricultural implements and the like. More particularly, it relates to shank holders for holding the shank of an agricultural implement or the like which is constantly urged into ground-engaging relation and which must necessarily be able to rock or pivot at its forward end to permit the implement to yield when exceptionally heavy obstructions are met.

It is a general object of my invention to provide a novel and improved shank holder of cheap and simple construction.

Another object is to provide a novel and improved shank holder upon which the shank may be quickly and simply mounted.

Another object is to provide a shank holder adapted to be pivotally mounted for use in conjunction with an upright upwardly urged tension rod at its forward end and having its forward end portions so constructed as to facilitate such pivotal movement.

These and other objects and advantages of my invention will more fully appear from the following description made in connection with the accompanying drawings, wherein like reference characters refer to the same or similar parts throughout the several views, and in which:

Fig. 1 is a side elevational view of one embodiment of my invention used in conjunction with a pair of mounting members which secure the ground implement to a cross member of an agricultural machine;

Fig. 2 is a top plan view of my shank holder;

Fig. 3 is a longitudinal sectional view of the same; and

Fig. 4 is a transverse vertical sectional view taken approximately along line 4-4 of Fig. 3.

One embodiment of my invention is shown in Fig. 1 pivotally mounted upon a pair of mounting members indicated generally as A and B. These mounting members positively engage the cross member C of the agricultural machine. As shown, the mounting member A has a channel element 5 and a pair of depending webs 6 which extend downwardly from its opposite sides and each of which has a transversely extending aperture 7 formed therethrough. These apertures carry pivot pin 8 which extends thereacross and therethrough to provide a pivotal axis for the shank holder which embodies my invention. The other mounting member B has a channel member 9 which engages the cross member C and a pair of spaced generally triangularly shaped side portions 10 which extend vertically and forwardly with respect to the cross member C. Each of the side portions 10 has a groove or recess 11 adapted to receive therein the ears 12 of a collar 13 which is slidably mounted upon an upright tension rod 14. The tension rod 14 is threaded at its lower end and carries a washer 15 and a nut 16 thereupon. Mounted on the upper end portion of the tension rod 14 is a compression spring 17 the lower end of which abuts against the collar 13 and the upper end of which abuts against the broad end portion 18 of the tension rod. The compression spring 17 continuously urges the collar 13 downwardly and resists any attempt to draw the tension rod 14 further downwardly. The two mounting members A and B are held together by bolts D so that the channel mem-

bers 5 and 9 will positively engage the cross member C and provide a rigid mounting for the shank holder shown.

The structure recited above is utilized in conjunction with my shank holder to mount a shank 19 and an agricultural implement 20, which it carries, upon the cross member C.

Figs. 2, 3 and 4 show in greater detail the shank holder which embodies my invention. As shown, it includes a rigid elongated bar 21 which has a forward end portion 22, a rearward end portion 23, and a medial portion 24. Along its side edges is a pair of spaced and oppositely depending webs 25 and 26 which extend longitudinally of the bar 21 and have oppositely disposed apertures 27 formed therethrough, these apertures extending transversely of the bar 21 and being adapted to receive the pivot pin 8 which extends through the lower end portion of the mounting member A. A sleeve element 28 having the same internal bore as the apertures 27 connects the two side webs 25 and 26 to provide a pivotal bearing for the bar 21.

Mounted upon the upper surface of the bar 21 and extending upwardly therefrom is a longitudinally extending sleeve element 29, the bore 30 of which is of such size as to readily receive the shank 19 therethrough so that the shank will extend longitudinally of the bar 21. Formed through the bar 21 on the opposite side of the sleeve 28 with respect to the sleeve 29 is a vertically extending aperture 31 adapted to receive a bolt 32 which rigidly affixes the forward end of the shank 19 to the bar 21 at that point.

The forward end portion 22 of the bar 21 is vertically apertured as at 33 and has a lower surface 34 which is shaped convexly and which functions as an abutment surface for the washer 15 and is urged upwardly by the spring 17 and the nut 16. The bore of the aperture 33 is such that the portion of the bar 21 which forms the rear wall 35 of the aperture slopes upwardly and rearwardly as best shown in Fig. 3. The aperture 33 itself is of greater dimensions longitudinally of the bar than transversely as is best shown in Fig. 2.

Mounted on the upper surface of the bar 21 and extending upwardly therefrom is an abutment shoulder 36 which

is positioned between the aperture 31 and the aperture 33. This abutment shoulder 36 when the entire unit is assembled abuts against the lower end portion of the mounting member B to prevent the upper surface of the forward end portion of the plate 21 from pivoting to a position above horizontal.

In operation, the shank holder is mounted upon the mounting members A and B in the manner shown in Fig. 1 with the shank slid from the rear through the sleeve 29 and affixed by the bolt 32 to the portion of the bar forward of the transverse sleeve 28. The shank holder is pivotally mounted between the depending webs 29 of the mounting member A by slipping the pivot pin 8 through the aperture 7 of the web and through the sleeve 28. The tension rod 14 is then inserted through the aperture 33 and the washer 15 and the nut 16 threaded onto the lower end portion of the tension rod 14 so that the washer 15 will abut against the abutment surface 34 of the forward end portion of the shank holder.

As the agricultural machine (not shown) is drawn forwardly the implement 20 is maintained in ground-engaging position by the upward urging upon the forward end portion of the shank holder which is exerted by the tension rod 14 and the spring 17. Whenever an obstacle is encountered or a particularly hard area of ground is engaged the implement tends to raise upwardly and the shank and the shank holder pivot about the pivot pin 8 with the forward end portion 22 of the shank holder moving downwardly in the direction shown by the arrow in Fig. 1. As this takes place the angle between the top surface of the bar 21 and the tension rod 14 changes and the tension rod 14 moves over toward the rearwardly sloping near wall portions 35 of the aperture 33. At the same time the washer 15 slides easily forwardly around the convexly shaped abutment surface 34. By so constructing my shank holder the pivotal movement of the same is unobstructed and unhindered except for the upward urging of the spring 17. Thus my shank holder makes it possible to provide a truly pivotal mounting for the forward end of the shank 19 and places a much lesser strain upon the implement 20 itself which in the past has fre-

quently resulted in undue and unnecessary breakage of the implement.

Thus it can be seen that I have provided a novel and improved shank holder of extremely simple and cheap construction. It can be readily seen that my shank holder is constructed so as to provide the maximum in freedom of pivotal movement of the same so that no undue strain is placed upon any part of the mounting or holder for the shank. The freedom of movement provided by the rearwardly extending walls 35 of the aperture 33 and the pivotal mounting of the tension rod 14 provided by the ears 12 of the collar 13 and the grooves 11 makes it possible for the rear end portion of the shank 19 to raise to any level which may ordinarily be required in ground-working operations.

It will of course be understood that various changes may be made in the form, details, arrangement, and proportions of the various parts without departing from the scope of my invention.

WHAT IS CLAIMED IS:

1. A shank holder comprising a rigid elongated bar, means for rigidly connecting the shank to the rearward end portion of said bar to extend longitudinally thereof, a transversely extending sleeve element mounted upon the medial portion of said bar and adapted to pivotally connect the holder to an implement mounting for pivotal movement relative thereto, said bar having an aperture formed at its forward end portion for receiving therethrough an upright upwardly and resiliently urged tension rod having a washer and nut at its lower end for abutment against the lower surface of said forward end portion, the lower surface of the forward end portion of said bar surrounding said aperture being convexly shaped to facilitate the pivotal movement of the holder relative to the mounting while the forward portion thereof is urged upwardly by the washer and nut on the tension rod.

2. A shank mounting having in combination a rigid elongated bar, an upstanding sleeve element mounted upon the rearward end portion of said bar with the opening of said sleeve element extending longitudinally of said bar

to accommodate a shank therewithin and to facilitate the connection of the shank to said bar, and a transversely extending sleeve element mounted upon the medial portion of said bar and adapted to pivotally connect the bar to an implement mounting for pivotal movement relative thereto, said bar having an aperture formed in its forward end portion, a vertically movable upwardly and resiliently urged tension rod extending through said aperture and having a washer and nut at its lower end for abutment against the lower surface of said forward end portion, the lower surface of the forward end portion of said bar surrounding said aperture being convexly shaped to facilitate the pivotal movement of said bar relative to the mounting while the forward portion thereof is urged upwardly by the washer and nut on the tension rod.

3. A shank holder comprising a rigid elongated bar, means for rigidly connecting the shank to the rearward end portion of said bar, a transversely extending sleeve element mounted upon the lower side of the medial portion of said bar and adapted to pivotally connect the holder to an implement mounting for pivotal movement relative thereto, said bar having an aperture formed in its forward end portion for receiving therethrough an upright upwardly and resiliently urged tension rod having a washer and nut at its lower end for abutment against the lower surface of said forward end portion, the lower surface of the forward end portion of said bar surrounding said aperture being convexly shaped to facilitate the pivotal movement of the holder relative to the mounting while the forward portion thereof is urged upwardly by the washer and nut on the tension rod, the aperture in the forward end portion of said bar being of greater dimensions longitudinally than transversely of the bar to facilitate the pivotal movement of the holder.

4. A shank holder for pivotally securing a shank to an implement mounting which has a pair of transversely apertured downwardly extending webs and a pivot pin in such apertures, said holder comprising a rigid elongated body having an upstanding sleeve at its rearward end extending longitudinally of said body and having a transverse sleeve at its intermediate portion of lesser length

than the spacing between the implement mounting webs to permit the same to be pivotally mounted therebetween, and having a forward end portion vertically apertured to permit an upright upwardly urged tension rod to extend therethrough and to be connected thereto by a washer and nut at the lower end of the rod, the forward end portion of said body having a lower abutment surface shaped convexly to facilitate the movement of such washer relative thereto while the holder pivots relative to its mounting.

5. A shank holder comprising a rigid elongated bar, means for rigidly connecting the shank to the rearward end portion of said bar so as to extend rearwardly therefrom, a transversely extending sleeve element mounted upon the medial portion of said bar and adapted to pivotally connect the holder to an implement mounting for pivotal movement relative thereto about an axis transverse to the direction of movement of the implement, said bar having an aperture formed in its forward end portion for receiving therethrough an upright upwardly and resiliently urged tension rod having a washer and nut at its lower end for abutment against the lower surface of said forward end portion, the portions of said bar which define the rearward walls of the aperture in said forward end portion of said bar extending diagonally upwardly and rearwardly from the lower surface of said forward end portion to permit the tension rod to remain in an upright position despite downward movement of said forward end portion during the pivotal movement of the holder.

6. A shank holder comprising a rigid elongated bar, an upstanding sleeve element mounted upon the rearward end portion of said bar with the opening of said sleeve element extending longitudinally of said bar to accommodate a shank therewithin and to facilitate the connection of the shank to the bar, and a transversely extending sleeve element mounted upon the medial portion of said bar and adapted to pivotally connect the holder to an implement mounting for pivotal movement relative thereto, said bar having an aperture formed in its forward end portion for receiving therethrough an upright upwardly

and resiliently urged tension rod having a washer and nut at its lower end for abutment against the lower surface of said forward end portion, the lower surface of the forward end portion of said bar surrounding said aperture being convexly shaped to facilitate the movement of such washer relative thereto while the holder pivots relative to its mounting and the forward portion of said bar is urged upwardly by the washer and nut on the tension rod, the aperture in said forward end portion of said bar being of longer dimensions longitudinally of the bar than transversely thereto and having its rearward-most walls sloping upwardly and rearwardly to facilitate unhindered pivotal movement of the shank holder except for the upward urging of the tension rod.

7. The structure defined in Claim 6, and an upwardly extending abutment shoulder mounted on the upper surface of said bar intermediate said transverse sleeve element and said aperture for abutment against the mounting to which the holder is connected to prevent the forward end portion of said bar to move upwardly beyond horizontal position.

## OATH, POWER OF ATTORNEY, AND PETITION

Being duly sworn I (XX) Elmer A. Rolf, depose and say that I am a citizen of the United States of America, residing at Glencoe, Minnesota, that I have read the foregoing specifications and claims and I verily believe I am the original, first and sole inventor of the invention or discovery in SHANK HOLDER, described and claimed herein: that I do not know and do not believe that this invention was ever known or used before my invention or discovery thereof, or patented or described in any printed publication in any country before my invention or discovery thereof, or more than one year prior to this application, or in public use or on sale in the United States for more than one year prior to this application; that this invention or discovery has not been patented in any country foreign to the United States on an application filed by me or my legal representatives or assigns more than twelve months before this application; and that no application for patent

on this invention or discovery has been filed by me or my representatives or assigns in any country foreign to the United States, except as follows:

— No exceptions —

And I hereby appoint WILLIAMSON, WILLIAMSON, SCHROEDER & ADAMS, 950 Pillsbury Building, Minneapolis, Minnesota, Registration No. 12984, my attorneys, with full power of substitution and revocation, to prosecute this application and to transact all business in the Patent Office connected therewith.

Wherefore I pray that Letters Patent, be granted to me for the invention or discovery described and claimed in the foregoing specification and claims, and I hereby subscribe my name to the foregoing specification and claims, oath, power of attorney, and this petition.

| | First name | Middle initial | Last name |
|---|---|---|---|
| INVENTOR | Elmer | A. | Rolf |

Post Office Address Glencoe, Minn.

INVENTOR _____

| | First name | Middle initial | Last name |
|---|---|---|---|

Post Office Address _____

_____

State of MINNESOTA )
) ss.
County of MCLEOD )

Before me personally appeared Elmer A. Rolf, to me known to be the person described in the above application for patent, who signed the foregoing instrument in my presence, and made oath before me to the allegations

set forth therein as being under oath, on the 2nd day of April, 1952.

/s/ Frank J. Heaney
Notary Public

(Seal)

My Commission Expires Sept. 5, 1956

WILLIAMSON, WILLIAMSON, SCHROEDER & ADAMS
Registration No. 12984

97
47.84

Aug 24, 55

605

283174 # 2

Pat. No. 2,739,518

PRINT OF DRAWING AS ORIGINALLY FILED

FIG. 2

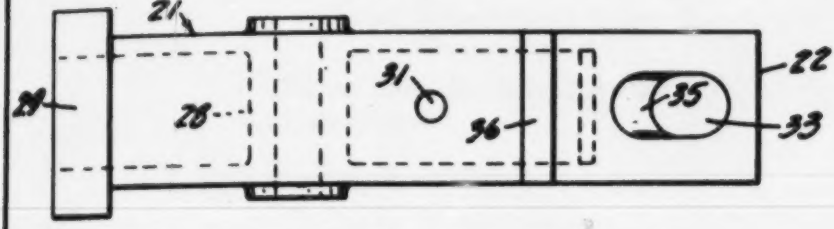


FIG. 3

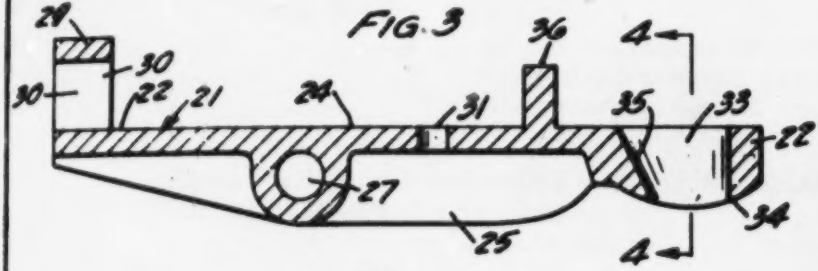


FIG. 1

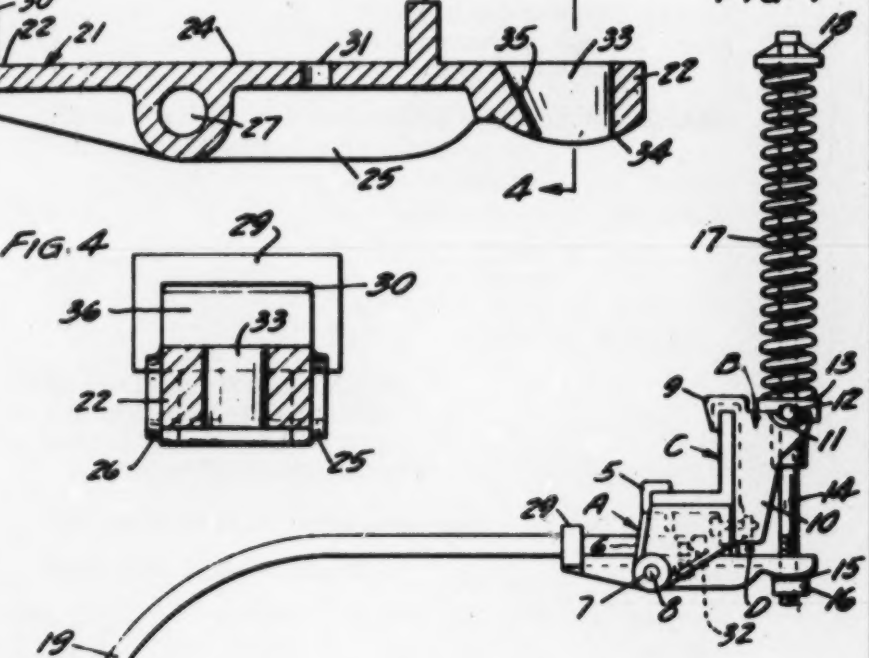


FIG. 4




INVENTOR
ELMER A. ROLF

By Williamson, Williamson, Schroeder & Adams
ATTORNEYS

DEPARTMENT OF COMMERCE
United States Patent Office
Washington

(Mailed Nov. 25, 1952, Pat. Div. 1)
Address Only

The Commissioner of Patents
Washington 25, D. C.

Paper No. 3

All communications respecting this application should give the serial number, date of filing, and name of the applicant.

Please find below a communication from the EXAMINER in charge of this application.

/s/ John A. Marzall
Commissioner of Patents.

Applicant: Elmer A. Rolf
Ser. No. 283,174
Filed April 19, 1952
For SHANK HOLDER

WILLIAMSON, WILLIAMSON,
SCHROEDER AND ADAMS
950 PILLSBURY BUILDING
MINNEAPOLIS, MINNESOTA

This application has been examined.

References made of record:

| | | | |
|---|---|---|---|
| Rix | 287,965 | Nov. 6, 1883 | 55-7 |
| Elder | 304,713 | Sep. 9, 1884 | 97-200-x |
| Jones | 431,981 | July 8, 1890 | 97-200 |
| Graham | 2,493,811 | Jan. 10, 1950 | 97-184 |
| Petersen | 57,391 | Mar. 10, 1940 | 97-184 |

(Denmark) (2 pp. spec.—1 sht. drwgs.)

Claims 1 through 6 are rejected on Rix in view of either Elder or Jones. The expedient of providing a con-

vex surface to contact a washer and nut on a spring tension rod is shown to be old in the art by either Elder or Jones in the embodiment of lugs e' and 13 respectively. To provide a like surface on the nut engaging portion of the Rix shank holder is considered to be well within the expected skill of the art and devoid of invention.

Claim 7 is rejected on the same references relied upon and for the same reasons advanced in the rejection of claims 1 through 6 taken with Petersen. To provide a shoulder abutment on the holder of Rix would not constitute invention in view of the teachings of Petersen in the embodiment of shoulder abutment 17 on holder 2.

Upon allowance of any claim revision as to form may be required. Rule 105.

All the claims are rejected.

/s/ A. Joseph Greeley
Examiner

IN THE UNITED STATES PATENT OFFICE

(Mail Division, May 25, 1953, U.S. Patent Office)
(U.S. Patent Office, May 27, 1953, Division 1)

| | | |
|---|---|---|
| Re App | Elmer A. Rolf | Before the Primary Examiner Division 1 |
| S. N. | 283,174 | |
| Filed | April 19, 1952 | |
| For | SHANK HOLDER | |

Hon. Commissioner of Patents
Washington 25, D. C.

Dear Sir:

Responsive to the official action of November 25, 1952 on the above entitled application, please make the following amendments to said application:

Without prejudice to the patentable subject matter contained therein, cancel Claims 3, 4, 5, 6 and 7.

Claim 2, line 1, substitute "mounting having in combination" for—holder comprising—; line 10, insert a comma at the end of the line; line 11, substitute "a vertically movable" for "for receiving therethrough an upright"; line 12,

insert "extending through said aperture and" after—rod —; line 17, substitute "mounting" for—holder—.

## REMARKS

The action referred to above and the references cited therein have been carefully studied with respect to the instant application. Claims 3-7 have been cancelled for the sake of facilitating the prosecution of the application and since it is felt that if the two Claims contained in the application are allowed they will provide adequate protection for the patentee.

Claim 1 was rejected on Rix in view of either Elder or Jones, the Examiner indicating that Elder and Jones show it to be old in the art to provide a convex surface to contact a washer and nut on a spring tension rod. The attention of the Examiner is called to the fact, however, that the Rix device does not show a shank holder wherein any advantage would be obtained by so forming the lower surface of the elongated bar as specified in the Claims. Such a modification of the Rix device would merely provide a convex surface against which the spring would bear. There is no need for such a surface in the Rix device since the rod E is curved to provide for the arcuate movement of the apertured end of the shank holder. The adaptation therefore, would be a silly one since the Rix device functions in an entirely different manner. It seems clear, therefore, that there is no teaching in either Elder or Jones which would lead one to the structure defined in the Claims. The Rix device does not utilize the principle of a vertically movable rod which is resiliently urged upwardly to urge the shank downwardly into the ground. On the contrary, the Rix device uses a fixed rod with a spring mounted thereon and slidable therealong to provide the urging to the shank holder. It seems clear, therefore, that the structure claimed in Claim 1 would be arrived at by the Examiner or anyone skilled in the art only in the light of the applicant's disclosure and from a position of hindsight. Such modification and reconstruction in the light of the applicant's disclosure is clearly not permissible under well-established patent law. See *Topliff* v. *Topliff*, 145 US 156, and *Hobbs* v. *Beach*, 180 US 383.

The prior art may be utilized only for what the individual patents teach, not for what would result with modification or combinations of mechanisms from a number of patents which is taught only by the invention under consideration in the application.

The attention of the Examiner is also called to the fact that the structure shown in the Rix patent does not meet the structure defined in Claim 1. Claim 1 specifies that the transversely extending sleeve element is mounted upon the medial portion of the bar whereas in Mix the transversely extending sleeve element is mounted at the extereme end of the bar. This means that almost the entire strain of the upward urging on the shank is placed directly upon the pin end whereas in the applicant's device, more of the strain is borne by the resiliently urged tension rod 14.

Claim 2 has been amended to call for a shank mounting having in combination a rigid elongated bar with an upstanding sleeve element mounted upon the rearward end portion of the bar and a transversely extending sleeve element mounted upon the medial portion of the bar, and a vertically movable upwardly and resiliently urged tension rod extending through an aperture on the forward end of the bar. The Claim further specifies that the lower surface of the forward end portion of the bar is convexly shaped to facilitate the pivotal movement of the holder. Claim 2 was rejected on Rix in view of Elder or Jones but the Rix device fails to show the basic combination called for in the Claim. None of the references show the combination of a rigid bar having an upstanding sleeve element at one of its ends and a transversely extending sleeve at its medial portion and an aperture through its forward end portion through which a vertically movable tension rod extends which is constantly resiliently urged upwardly. The Rix device utilizes a fixed rod which cannot move upwardly. Furthermore, as pointed out above, the forward end of the bar slides along the rod instead of the rod moving with the bar as is the case in the applicant's device. It seems clear, therefore, that the basic combination has not been shown in Rix and therefore the Claim is clearly patentable, since it is fundamental and thoroughly established patent law that in order to properly reject a Claim by combining a number of patents, at

least one of those patents must show the basic combination called for in the Claim. Under well-established law, such as in the case of *Owens Co.* v. *Twin City Separator Co.*, 168 F 259, this means that at least one of the patents must disclose all of the salient elements or other mechanical equivalents doing substantially the same work by substantially the same means. It is respectfully submitted to be clear that Rix does not show all of the elements recited in Claim 2 and it does not show any element doing the work in the same manner.

In view of the above remarks, it is believed that the Examiner will agree that each of Claims 1 and 2 is properly patentable, and their early consideration and allowance is most respectfully requested.

Signed at Minneapolis, Minnesota, this 21st day of May, 1953.

ELMER A. ROLF
By his Attorneys
WILLIAMSON, WILLIAMSON, SCHROEDER & ADAMS
By E. J. Schroeder

EJS:mn

DEPARTMENT OF COMMERCE
United States Patent Office
Washington

Address Only
The Commissioner of Patents
Washington 25, D. C.

All communications respecting this application should give the serial number, date of filing, and name of the applicant.
Paper No. 5

Williamson, Williamson,
Schroeder and Adams
950 Pillsbury Building
Minneapolis, Minnesota

Applicant: Elmer A. Rolf
Ser. No. 283,174
Filed April 19, 1952
For SHANK HOLDER

(Mailed Mar. 4, 1954, Pat. Div. 1)

Please find below a communication from the EXAMINER in charge of this application.

/s/ Robert C. Watson

Commissioner of Patents.

Responsive to amendment filed May 25, 1953.

Additional reference made of record:

| | | | |
|---|---|---|---|
| Graham | 2,627,798 | Feb. 10, 1953 | 97-47.83 |

(Filed Aug. 27, 1951)

The above cited patent has become available as a reference since the first Office action.

Claims 1 and 2 are rejected as not patentable over the above cited patent to Graham, 2,627,798, in view of the patent of record to Graham, 2,493,811, and either of the patents of record to Jones or Elder. It would not require invention to reverse the position of member 12 of Graham, 2,627,798, so as to place it on the lower side of the tool shank 2 as is the member 63 of Graham, 2,493,811, and to substitute the nut and washer and convex surface of Jones at 13 or Elder at E' for the member 64 of Graham, 2,627,798. Such a substitution of equivalents would be no more than an obvious substitution of well known equivalents, not amounting to invention.

Claim 2 is further rejected as vague and indefinite in the last four lines in that "the pivotal movement of the mounting relative to the mounting" is not clear.

Claims 1 and 2 are rejected.

Claims 3 through 7 have been canceled.

/s/ A. Blum

Actg. Examiner

FBS

F. B. Sherry/wm

IN THE UNITED STATES PATENT OFFICE

(Mail Division, Sept. 3, 1954, U.S. Patent Office)
(U.S. Patent Office, Sept. 9, 1954, Division 1)

| | | |
|---|---|---|
| Re App | Elmer A. Rolf | Before the Primary Examiner Division 1 |
| S. N. | 283,174 | |
| Filed | April 19, 1952 | |
| For | SHANK HOLDER | |

Hon. Commissioner of Patents
Washington 25, D. C.

Dear Sir:

AFFIDAVIT under Rule 131

STATE OF MINNESOTA )
) SS
COUNTY OF HENNEPIN )

I, Elmer A. Rolf, Glencoe, Minnesota, being first duly sworn depose and say as follows:

I am the inventor of the Shank Holder disclosed and claimed in application for United States Letters Patent, Serial Number 283,174 filed by me in the United States Patent Office on April 19, 1952, and entitled "SHANK HOLDER". I conceived and reduced to practice this invention within this country by producing a pattern of the Shank Holder shown and claimed in the above entitled application for patent and submitted the same to Prospect Foundry Company, 1225 Winter Street, Minneapolis, Minnesota, for commercial manufacture thereof as early as May, 1951. The original pattern equipment is still in existence at the Prospect Foundry Company and the partners of the company can produce the same upon demand.

/s/ Elmer A. Rolf

Subscribed and sworn to before me, a Notary Public, this 2nd day of September, 1954.
(Seal)

L. M. Overby
Notary Public, Hennepin County, Minnesota.

My Commission expires Feb. 25, 1955.

IN THE UNITED STATES PATENT OFFICE
(Mail Division, Sept. 3, 1954, U.S. Patent Office)
(U.S. Patent Office, Sept. 9, 1954, Division 1)

Re App Elmer A. Rolf
S. N. 283,174
Filed April 19, 1952
For SHANK HOLDER

Before the Primary Examiner
Division 1

Hon. Commissioner of Patents
Washington 25, D. C.

Dear Sir:

AFFIDAVIT under Rule 131

State of Minnesota )
) SS
County of Hennepin )

I, Stanley J. Sitarz, 1951 Stinson Boulevard, Minneapolis, Minnesota, being first duly sworn, depose and say as follows:

I am one of the partners of Prospect Foundry Company, 1225 Winter Street, Minneapolis, Minnesota. I hereby certify that our company manufactured and shipped Shank Holders manufactured in strict accordance with the copy of the drawings for application for United States patent, Serial Number 283,174 which is attached hereto and designated as Exhibit A. This Shank Holder was given part No. HDC 2497 and we have manufactured and shipped a number of the same as early as May, 1951, as is evidenced by the invoice attached hereto and designated as Exhibit B. Mr. Elmer A. Rolf of Glencoe, Minnesota submitted a pattern of this Shank Holder to us as early as May, 1951, and these Shank Holders, part No. HDC 2497, were manufactured and shipped for Glencoe Manufacturing Company in strict accordance with that pattern.

/s/ Stanley J. Sitarz

Subscribed and sworn to before me, a Notary Public, this 1st day of September, 1954.

Walter F. Sexton
Notary Public

Commission expires 7-18-55

615

# PROSPECT FOUNDRY CO.

#6

ORIGINAL

MAIL DIVISION SEP 1954 U.S. PATENT OFFICE

GRAY IRON LOW CARBON ALLOY CASTINGS
1225 WINTER ST. N. E. GLADSTONE 2461

MINNEAPOLIS 14, MINN. 5/27 1951

SOLD TO Glencoe Mfg. Co.

ADDRESS

SEP 9

DIVISION

| ORDER NO. | QUANTITY | PATTERN NO. | WEIGHT | PRICE | AMOUNT |
|---|---|---|---|---|---|
| 853 | 64 | HDC 2497 | 256 | | |
| | | Ductile Annealed | | | |
| | | .78 ea | | | 49.92 |

RECEIVED THE ABOVE IN GOOD ORDER

REC'D BY Harold Rafsnes Jr. NO. 16337

MOORE BUSINESS FORMS, INC., MINNEAPOLIS, MINN.

23

617

All. 6927

# PROSPECT FOUNDRY

#6

1225 WINTER ST. N. E. -:- MINNEAPOLIS 14, MINN.

GRAY IRON - DUCTILE IRON
LOW CARBON ALLOY CASTINGS

U.S. PATENT OFFICE

SOLD TO May 29, 1951

Glencoe Mfg.Co.

DATE SEP 9 1 ..

SHIPPED TO DIVISION 2

Terms: Net 10th of month F. O. B.

INVOICE NO. 16337

| ORDER NO. | QUANTITY | PATTERN NO. | WEIGHT | PRICE | AMOUNT |
|---|---|---|---|---|---|
| 853 | 64 | HDC 2497<br>Ductile Annealed | 256# | .78 ea. | $ 49.92 |

24

#6

619

FIG. 2

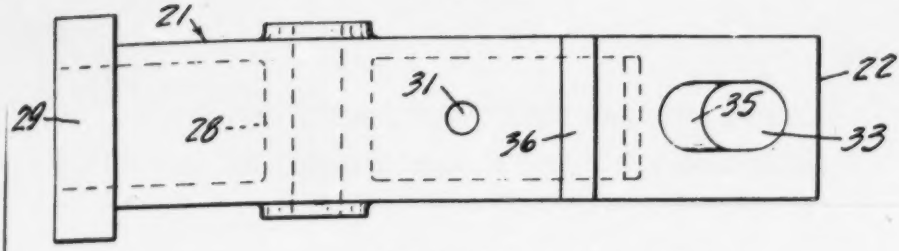


FIG. 3

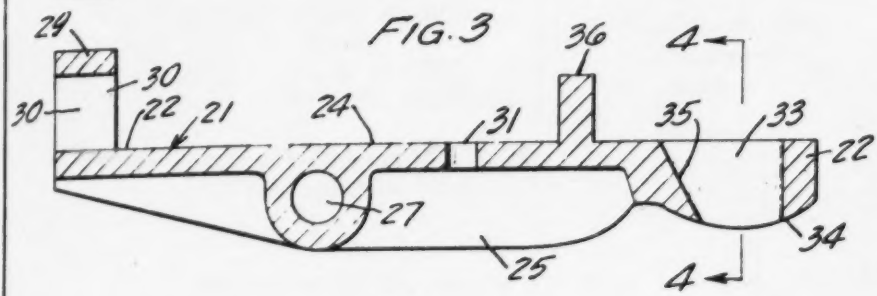


FIG. 1

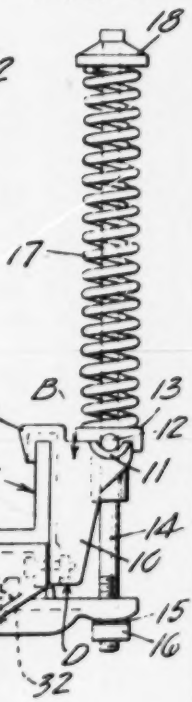


FIG. 4

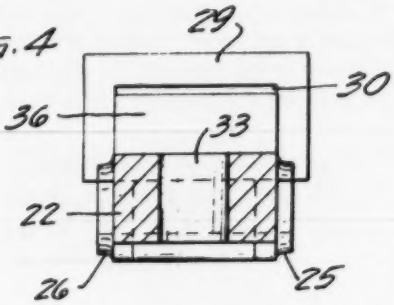

INVENTOR
ELMER A. ROLF
BY
Williamson, Williamson, Schroeder & Adams
ATTORNEYS

IN THE UNITED STATES PATENT OFFICE

(Mail Division, Sept. 3, 1954, U.S. Patent Office)
(U.S. Patent Office, Sept. 9, 1954, Division 1)

| | | |
|---|---|---|
| Re App | Elmer A. Rolf | Before the Primary Examiner Division 1 |
| S. N. | 283,174 | |
| Filed | April 19, 1952 | |
| For | SHANK HOLDER | |

Hon. Commissioner of Patents
Washington 25, D. C.

Dear Sir:

Responsive to the official action of March 4, 1954 on the above entitled application, it is respectfully requested that reconsideration be given the instant application in the light of the remarks made hereinbelow. It is also respectfully requested that the application be amended as follows:

Claim 2, line 8, substitute "bar" for—holder—. Line 16, substitute "said bar" for—the—second occurrence. Make line 17 read as follows: "relative to the mounting while the forward portion".

## REMARKS

The action referred to above has been carefully studied with respect to the instant application. Claim 2 has been carefully amended to overcome the objection as to vagueness and indefiniteness in the last four lines of that claim.

It is respectfully requested that the Graham patent No. 2,627,798 be withdrawn as a reference from the instant application under Rule 131 entitled "Affidavit of Prior Invention to Overcome Cited Patent or Publication". Submitted herewith is an affidavit from the inventor stating that he reduced the instant invention to practice well in advance of the filing date of said Graham patent which was August 27, 1951. The applicant's affidavit states that he had reduced his invention to practice as early as May, 1951.

Also submitted herewith is an affidavit from Mr. Stanley J. Sitarz, a partner of the Prospect Foundry Company, Minneapolis, Minnesota. In this affidavit, Mr. Sitarz states that his company manufactured and shipped shank holders embodying the invention of the instant application as early as May, 1951 in behalf of Elmer A. Rolf, the applicant, who is one of the partners of Glencoe Manufacturing Company, Glencoe, Minnesota. Attached to the affidavit of Mr. Sitarz is a copy of the drawings of the instant application from which he identified the structure manufactured by him for Mr. Rolf as part No. HDC 2497. This number is casted on the casting. Also attached to the affidavit is a copy of an invoice of the Prospect Foundry Company of which Mr. Sitarz is a partner, clearly establishing shipment of such parts as early as May, 1951.

In view of the above it is believed that the applicant has clearly set forth ample proof of having reduced his invention to practice well in advance of the filing date of the Graham patent No. 2,627,798 and therefore that patent is not a proper reference against the allowance of the instant application.

In view of the fact that the rejection relies upon this Graham patent No. 2,627,798 as the primary reference it is believed to be clear that the allowance of Claims 1 and 2 is now proper, and their early consideration and allowance is most respectfully requested.

ELMER A. ROLF
By his Attorneys
WILLIAMSON, WILLIAMSON, SCHROEDER & ADAMS
By E. J. Schroeder

Minneapolis, Minn., September 2, 1954
EJS/ds
Attach.

Paper No. 7
Serial No. 283,174

## REFERENCES CITED

The following references are of record in the patented file of this patent:

### UNITED STATES PATENTS

| Name | Number | Date |
|---|---|---|
| Rix | 287,965 | Nov. 6, 1883 |
| Elder | 304,713 | Sept. 9, 1884 |
| Jones | 431,981 | July 8, 1890 |
| Graham | 2,493,811 | Jan. 10, 1950 |
| Graham | 2,627,798 | Feb. 10, 1953 |

### FOREIGN PATENTS

| Country | Number | Date |
|---|---|---|
| Denmark | 57,391 | Mar. 10, 1940 |

### OTHER REFERENCES

dm—Class. Div. IV

DEPARTMENT OF COMMERCE

United States Patent Office
Washington

Address Only
The Commissioner of Patents
Washington 25, D. C.

All communications respecting this application should give the serial number, date of filing, and name of the applicant.

## NOTICE OF ALLOWANCE

(Mailed August 24, 1955. Class Div. IV)

The application for patent identified below has been examined and found allowable for issuance of Letters Patent.

Applicant (Assor.) Elmer A. Rolf
Title of Invention or Improvement Shank Holder
Serial No. 283,174

Filing Date April 19, 1952

No. Claims Allowed 2

Examiner Mrs. M. P. Smith

With the allowance of the application the final fee becomes due. This fee is thirty dollars ($30) plus one dollar ($1) for each claim allowed in excess of twenty (20) and must be paid within 6 months from the date of this notice. Failure to remit the final fee will result in the patent being withheld from issue.

As a convenience in remitting this fee, use of the enclosed Form POL-85a is suggested. The final fee will not be received from anyone other than the applicant, his assignee or attorney, or a party in interest as shown by the records of the Patent Office.

If it is desired to have the patent issued to an assignee or assignees, an assignment, together with the fee for recording the same, must be filed in this Office on or before the date of payment of the final fee.

The patent will be issued and forwarded within approximately two months after receipt of the final fee.

By direction of the Commissioner.

Williamson, Williamson, Schroder
and Adams
950 Pillsbury Building
Minneapolis, Minnesota

625

[illegible] - Class. Div. IV

345954

FINAL FEE TRANSMITTAL

This form is provided for convenience in transmitting final fees to the Patent Office. When properly completed it may be used in lieu of a formal transmittal letter. Respondents will note and fill in items numbered 1 thru 6 below. The Final Fee Receipt, in all cases, will be mailed to the address appearing in box at lower left of this form. If desired, use the reverse side of your Notice of Allowance for carbon copy when completing this form.

1. The COMMISSIONER OF PATENTS is requested to apply the accompanying fee to the case identified below, and deliver the patent as indicated.

February 20, 1956 — Williamson, Schroeder, Adams & Meyers

Date — Attorney, Agent or Applicant

FEB 21 1956

NOTE—Final fees will not be received from other than the applicant, his assignee, or attorney, or a party in interest as shown by the records of the Patent Office. Final fees will not be applied to pending applications.

Notice of Allowance Date

MAILED

AUG 24 1955

CLASS DIV. IV

APPLICANT (Assor.)

Elmer A. Rolf

TITLE OF INVENTION OR IMPROVEMENT

[illegible]

| SERIAL NO. | FILING DATE | NO. OF CLAIMS ALLOWED | EXAMINER |
|---|---|---|---|
| 265,174 | April 19, 1952 | 2 | (Mrs.) M. P. Smith |

2. DEFERMENT: (Indicate below if desired)

3. FEE ENCLOSED

$ 30.00

4. Assignee:

MAILING INSTRUCTIONS

Note—The office will send the patent to the address entered in stub at left below unless you direct otherwise. Use the spaces provided to indicate any changes which affect the delivery of the patent.

5. Do not send the patent to the addressee listed below. Send patent to (check one)

- [ ] Patentee
- [ ] Associate Attorney (See specific authorization in file)
- [ ] Assignee
- [ ] Change of address—Attorney

The address of the person checked above is typed in Item 6 below.

6.

30

283174

4/19/52

627

# CONTENTS

| | | | |
|---|---|---|---|
| 1. | Application papers. | 26. | |
| 2. | Bryant April 25, 1952 | 27. | |
| 3. | Rejection. NOV 25 1952 | 28. | |
| 4. | Amdt A May 25, 1953 | 29. | |
| 5. | Rejection MAR 4 1954 | 30. | |
| 6. | Amdt B. Abbott & Eph. Sept. 3/54 | 31. | |
| 7. | | 32. | |
| 8. | | 33. | |
| 9. | | 34. | |
| 10. | | 35. | |
| 11. | | 36. | |
| 12. | | 37. | |
| 13. | | 38. | |
| 14. | | 39. | |
| 15. | | 40. | |
| 16. | | 41. | |
| 17. | | 42. | |
| 18. | | 43. | |
| 19. | | 44. | |
| 20. | | 45. | |
| 21. | | 46. | |
| 22. | | 47. | |
| 23. | | 48. | |
| 24. | | 49. | |
| 25. | | 50. | |

16—11278-7 U. S. GOVERNMENT PRINTING OFFICE

U. S. PATENT OFFICE

APR 30 1952

DIVISION 1

PAPERS AS FILED MICROFILMED

PLAINTIFFS' EXHIBIT P

Plt. Ex. 629

PLF. EX. P

D.C.F.

March 27, 1956 E. A. ROLF 2,739,518

SHANK HOLDER

Filed April 19, 1952

FIG. 2

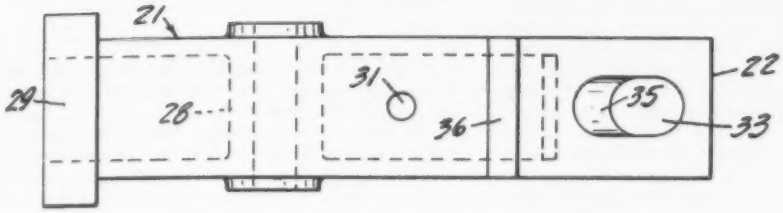


FIG. 3

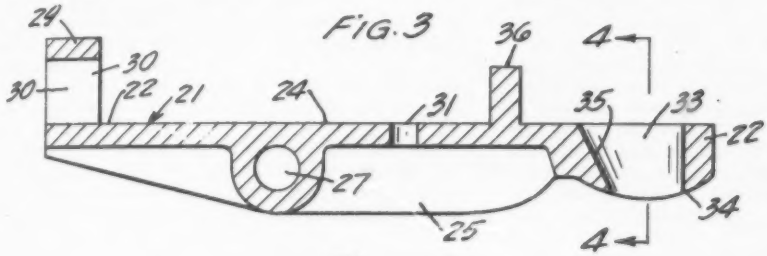


FIG. 4




FIG. 1

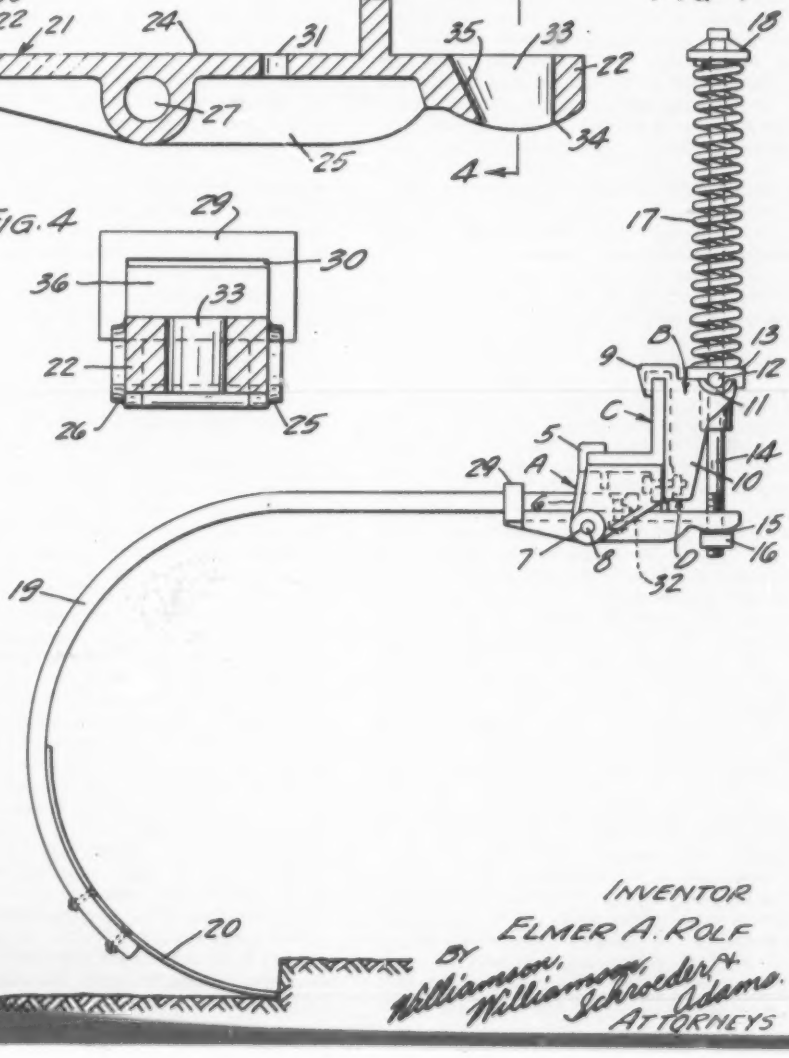


INVENTOR
ELMER A. ROLF
BY
Williamson, Williamson, Schroeder & Adams.
ATTORNEYS

631

# United States Patent Office

2,739,518

Patented Mar. 27, 1956



2,739,518

## SHANK HOLDER

Elmer A. Rolf, Glencoe, Minn., assignor to Glencoe Manufacturing Company, Glencoe, Minn., a corporation of Minnesota

Application April 19, 1952, Serial No. 283,174

2 Claims. (Cl. 97—47.84)

This invention relates to shank holders for holding the shanks of agricultural implements and the like. More particularly, it relates to shank holders for holding the shank of an agricultural implement or the like which is constantly urged into ground-engaging relation and which must necessarily be able to rock or pivot at its forward end to permit the implement to yield when exceptionally heavy obstructions are met.

It is a general object of my invention to provide a novel and improved shank holder of cheap and simple construction.

Another object is to provide a novel and improved shank holder upon which the shank may be quickly and simply mounted.

Another object is to provide a shank holder adapted to be pivotally mounted for use in conjunction with an upright upwardly urged tension rod at its forward end and having its forward end portions so constructed as to facilitate such pivotal movement.

These and other objects and advantages of my invention will more fully appear from the following description made in connection with the accompanying drawings, wherein like reference characters refer to the same or similar parts throughout the several views, and in which:

Fig. 1 is a side elevational view of one embodiment of my invention used in conjunction with a pair of mounting members which secure the ground implement to a cross member of an agricultural machine;

Fig. 2 is a top plan view of my shank holder;

Fig. 3 is a longitudinal sectional view of the same; and

Fig. 4 is a transverse vertical sectional view taken approximately along line 4—4 of Fig. 3.

One embodiment of my invention is shown in Fig. 1 pivotally mounted upon a pair of mounting members indicated generally as A and B. These mounting members positively engage the cross member C of the agricultural machine. As shown, the mounting member A has a channel element 5 and a pair of depending webs 6 which extend downwardly from its opposite sides and each of which has a transversely extending aperture 7 formed therethrough. These apertures carry pivot pin 8 which extends thereacross and therethrough to provide a pivotal axis for the shank holder which embodies my invention. The other mounting member B has a channel member 9 which engages the cross member C and a pair of spaced generally triangularly shaped side portions 10 which extend vertically and forwardly with respect to the cross member C. Each of the side portions 10 has a groove or recess 11 adapted to receive therein the ears 12 of a collar 13 which is slidably mounted upon an upright tension rod 14. The tension rod 14 is threaded at its lower end and carries a washer 15 and a nut 16 thereupon. Mounted on the upper end portion of the tension rod 14 is a compression spring 17 the lower end of which abuts against the collar 13 and the upper end of which abuts against the broad end portion 18 of the tension rod. The compression spring 17 continuously urges the collar 13 downwardly and resists any attempt to draw



the tension rod 14 further downwardly. The two mounting members A and B are held together by bolts D so that the channel members 5 and 9 will positively engage the cross member C and provide a rigid mounting for the shank holder shown.

The structure recited above is utilized in conjunction with my shank holder to mount a shank 19 and an agricultural implement 20, which it carries, upon the cross member C.

Figs. 2, 3 and 4 show in greater detail the shank holder which embodies my invention. As shown, it includes a rigid elongated bar 21 which has a forward end portion 22, a rearward end portion 23, and a medial portion 24. Along its side edges is a pair of spaced and oppositely depending webs 25 and 26 which extend longitudinally of the bar 21 and have oppositely disposed apertures 27 formed therethrough, these apertures extending transversely of the bar 21 and being adapted to receive the pivot pin 8 which extends through the lower end portion of the mounting member A. A sleeve element 28 having the same internal bore as the apertures 27 connects the two side webs 25 and 26 to provide a pivotal bearing for the bar 21.

Mounted upon the upper surface of the bar 21 and extending upwardly therefrom is a longitudinally extending sleeve element 29, the bore 30 of which is of such size as to readily receive the shank 19 therethrough so that the shank will extend longitudinally of the bar 21. Formed through the bar 21 on the opposite side of the sleeve 28 with respect to the sleeve 29 is a vertically extending aperture 31 adapted to receive a bolt 32 which rigidly affixes the forward end of the shank 19 to the bar 21 at that point.

The forward end portion 22 of the bar 21 is vertically apertured as at 33 and has a lower surface 34 which is shaped convexly and which functions as an abutment surface for the washer 15 and is urged upwardly by the spring 17 and the nut 16. The bore of the aperture 33 is such that the portion of the bar 21 which forms the rear wall 35 of the aperture slopes upwardly and rearwardly as best shown in Fig. 3. The aperture 33 itself is of greater dimensions longitudinally of the bar than transversely as is best shown in Fig. 2.

Mounted on the upper surface of the bar 21 and extending upwardly therefrom is an abutment shoulder 36 which is positioned between the aperture 31 and the aperture 33. This abutment shoulder 36 when the entire unit is assembled abuts against the lower end portion of the mounting member B to prevent the upper surface of the forward end portion of the plate 21 from pivoting to a position above horizontal.

In operation, the shank holder is mounted upon the mounting members A and B in the manner shown in Fig. 1 with the shank slid from the rear through the sleeve 29 and affixed by the bolt 32 to the portion of the bar forward of the transverse sleeve 28. The shank holder is pivotally mounted between the depending webs 29 of the mounting member A by slipping the pivot pin 8 through the aperture 7 of the web and through the sleeve 28. The tension rod 14 is then inserted through the aperture 33 and the washer 15 and the nut 16 threaded onto the lower end portion of the tension rod 14 so that the washer 15 will abut against the abutment surface 34 of the forward end portion of the shank holder.

As the agricultural machine (not shown) is drawn forwardly the implement 20 is maintained in ground-engaging position by the upward urging upon the forward end portion of the shank holder which is exerted by the tension rod 14 and the spring 17. Whenever an obstacle is encountered or a particularly hard area of ground is engaged the implement tends to raise upwardly and the shank and the shank holder pivot about the pivot pin 8

with the forward end portion 22 of the shank holder moving downwardly in the direction shown by the arrow in Fig. 1. As this takes place the angle between the top surface of the bar 21 and the tension rod 14 changes and the tension rod 14 moves over toward the rearwardly sloping rear wall portions 35 of the aperture 33. At the same time the washer 15 slides easily forwardly around the convexly shaped abutment surface 34. By so constructing my shank holder the pivotal movement of the same is unobstructed and unhindered except for the upward urging of the spring 17. Thus my shank holder makes its possible to provide a truly pivotal mounting for the forward end of the shank 19 and places a much lesser strain upon the implement 20 itself which in the past has frequently resulted in undue and unnecessary breakage of the implement.

Thus it can be seen that I have provided a novel and improved shank holder of extremely simple and cheap construction. It can be readily seen that my shank holder is constructed so as to provide the maximum in freedom of pivotal movement of the same so that no undue strain is placed upon any part of the mounting or holder for the shank. The freedom of movement provided by the rearwardly extending walls 35 of the aperture 33 and the pivotal mounting of the tension rod 14 provided by the ears 12 of the collar 13 and the grooves 11 makes it possible for the read end portion of the shank 19 to raise to any level which may ordinarily be required in ground-working operations.

It will of course be understood that various changes may be made in the form, details, arrangement, and proportions of the various parts without departing from the scope of my invention.

What is claimed is:

1. A shank holder comprising a rigid elongated bar, means for rigidly connecting the shank to the rearward end portion of said bar to extend longitudinally thereof, a transversely extending sleeve element mounted upon the medial portion of said bar and adapted to pivotally connect the holder to an implement mounting for pivotal movement relative thereto, said bar having an aperture formed at its forward end portion for receiving therethrough an upright upwardly and resiliently urged tension rod having a washer and nut at its lower end for abutment against the lower surface of said forward end portion, the lower surface of the forward end portion of said bar surrounding said aperture being convexly shaped to facilitate the pivotal movement of the holder relative to the mounting while the forward portion thereof is urged upwardly by the washer and nut on the tension rod.



2. A shank mounting having in combination a rigid elongated bar, an upstanding sleeve element mounted upon the rearward end portion of said bar with the opening of said sleeve element extending longitudinally of said bar to accommodate a shank therewithin and to facilitate the connection of the shank to said bar, and a transversely extending sleeve element mounted upon the medial portion of said bar and adapted to pivotally connect the bar to an implement mounting for pivotal movement relative thereto, said bar having an aperture formed in its forward end portion, a vertically movable upwardly and resiliently urged tension rod extending through said aperture and having a washer and nut at its lower end for abutment against the lower surface of said forward end portion, the lower surface of the forward end portion of said bar surrounding said aperture being convexly shaped to facilitate the pivotal movement of said bar relative to the mounting while the forward portion thereof is urged upwardly by the washer and nut on the tension rod.

**References Cited** in the file of this patent

UNITED STATES PATENTS

| | | |
|---|---|---|
| 287,965 | Rix | Nov. 6, 1883 |
| 304,713 | Elder | Sept. 9, 1884 |
| 431,981 | Jones | July 8, 1890 |
| 2,493,811 | Graham | Jan. 10, 1950 |
| 2,627,798 | Graham | Feb. 10, 1953 |

FOREIGN PATENTS

| | | |
|---|---|---|
| 57,391 | Denmark | Mar. 10, 1940 |

PLAINTIFF'S EXHIBIT Q.

OPINION LETTER OF JUDGE JOS. B. DOOLEY.

Filed March 14, 1957.

United States District Court For The Northern District of Texas

Joseph B. Dooley
U. S. District Judge

Amarillo, Texas
March 14, 1957

Underwood, Wilson, Sutton, Heare & Boyce
Amarillo, Texas

Gibson, Ochsner, Harlan, Kinney & Morris
Amarillo, Texas

Re: Wm. T. Graham, et al., v. Cockshutt Farm Equipment, Inc., No. 1953-Civil, Amarillo Division.

Gentlemen:

In the above cause I hold that both claims of the plaintiff's patent 798 are valid, but that same being simply an improvement patent in a somewhat crowded art, its limited equivalency range does not embrace the accused Cockshutt clamp, and there is no infringement of either claim in the patent.

I think the recent patent case styled Cameron Iron Works, Inc. v. Robert O. Stekoll, d/b/a Speed-O-Valve Co., decided February 27, 1957, by the Court of Appeals for the Fifth Circuit, will be of interest to counsel.

Counsel, respectively, may present suggestions of more detailed findings and conclusions, and in this instance might collaborate in drawing a proper decree for presentation to the Court promptly.

The metallic exhibits in this case are in the Court reporter's office, but now counsel should arrange to remove and store same elsewhere promptly, and I will thank you

to do that this week, as all of the Court personnel will be in Wichita Falls next week.

Sincerely yours,

(S.) JOS. B. DOOLEY,
United States District Judge.

CC: Fishburn, Mullendore & Gold,
Kansas City, Mo.

---

ORDER FOR FILING COURT'S LETTER OF MARCH 14, 1957, AS PART OF THE RECORD.

Filed: September 3, 1957.

(Title Omitted.)

At the request of counsel for all parties, it is ordered that the Court's letter dated March 14, 1957, addressed to respective counsel, announcing the Court's decision in this cause be filed by the Clerk and included as a part of the record in this cause.

Dated September 3rd, 1957.

JOS. B. DOOLEY,
United States District Judge.

Approved:

CLAYTON HEARE,
Of Counsel for Plaintiffs.

S. TOM MORRIS,
Of Counsel for Defendant.

---

FINDINGS OF FACT AND CONCLUSIONS OF LAW.

Filed July 12, 1957.

(Title Omitted.)

The Court hereby makes and files in the above cause Findings of Fact and Conclusions of Law, as follows:

## Findings of Fact.

1.

The Plaintiff, William T. Graham, resides at Amarillo and is a citizen of Texas. The Plaintiff, Graham-Hoeme Plow Co., Inc., is a domestic corporation domiciled at Amarillo, Texas. The Defendant, Cockshutt Farm Equipment, Inc., is a corporation organized under the laws of the State of Delaware with a principal place of business at Bellevue, Ohio, and having a regular and established place of business at Amarillo, Texas.

2.

The Court has jurisdiction of the parties and the subject matter of this suit.

3.

On January 10, 1950, Letters Patent No. 2,493,811 was issued to William T. Graham on an application filed February 26, 1947, for an invention relating to a subject designated "Vibrating Plow and Mounting Therefor". Said Graham is the owner thereof and Graham-Hoeme Plow Co., Inc. is a licensee under said Letters Patent.

4.

The Court finds that Graham Patent No. 2,493,811 is valid and Defendant admits infringement thereof by the sale of a device as exemplified in Plaintiffs' Exhibit No. 3. Plaintiffs have admitted that Defendant's clamp, exemplified by Plaintiffs' Exhibit No. 4, does not infringe said patent. Plaintiffs have waived any claim that Defendant was wilful or deliberate in said infringement and any claim for increased damages or attorney's fees therefor under above patent.

5.

On February 10, 1953, Letters Patent No. 2,627,798, was issued to William T. Graham on an application filed August 27, 1951, for an invention relating to a subject desig-

nated "Clamp For Vibrating Shank Plows". Said Graham is the owner thereof and Graham-Hoeme Plow Co., Inc., is a licensee under said Letters Patent.

6.

Patent No. 2,627,798 relates to what is commonly called a "spring clamp" and as disclosed in the patent, may be said to generally comprise a body portion attached to the lower flange of the H-beam and having a part pivoted or rocking on the body portion, the movable part being the fulcrum plate. The forward end of the shank is connected to the fulcrum plate at the forward end of said plate at a substantial distance from the pivoted point of the movable part of the clamp. A coil spring is arranged at the forward end of the fixed part and through a nut, washer and spring rod, acts on the shank and fulcrum plate to resiliently urge the forward end of the shank and fulcrum plate upwardly toward the fixed part of the clamp so that when forces are exerted backwardly and upwardly on the ground working tool, the forward end of the shank will move downwardly against the tension of the spring and rock or pivot with the movable part of the fulcrum plate. The shank is supported relative to the movable member by a stirrup which is adjacent to the pivot of the movable part. The stirrup supports the shank, but does so in a manner that permits movement of the shank thereby retaining the flexibility of the structure and reducing shock and eliminating some of the wear.

7.

Graham conceived the idea for the clamp of Patent No. 2,627,798 about March 1950, at which time his first drawing, Plaintiffs' Exhibit No. 12, was made at his direction by an employee, Proctor. Nothing further was done toward development of the idea until May 1951, at which time the second and third drawings, Plaintiffs' Exhibits Nos. 13 and 14, were made at his direction by the same employee. Only one aluminum model of the clamp, Defendant's Exhibit No. 38, has ever been made by the Plaintiffs and none of the clamps has ever been manufactured,

sold, used or tested by Plaintiffs. Graham did not use reasonable diligence in reducing the conception to practice until approximately the time that he filed his patent application on August 27, 1951. The date of invention to which he is entitled is August, 1951.

8.

The Glencoe clamp was first made and tested as early as August 1949, at which time it was exhibited to the public and photographed. Commercial manufacture thereof was commenced as early as December 1949, and it was offered for sale and actual orders were taken as early as March 14, 1950. It was advertised for sale in a printed publication in the United States in April 1950. Actual sale and delivery was made as early as May 22, 1950, and numerous other sales were made thereafter and prior to August 27, 1951.

9.

All of the prior patents relied upon herein by Defendant, except Rix No. 287,965 and Roberts No. 1,809,599, and all of the prior use devices relied upon by Defendant, except the Glencoe device, have heretofore been before this Court in previous Graham v. Jeoffroy litigation.

10.

The prior art as a whole, in one form or another, contains all of the mechanical elements of the Graham 798 structure, and in a broad sense all of the elements are found in one single reference, the Glencoe clamp, however, the particular arrangement of the elements, disclosed by 798, is not present in any single reference, or as a whole.

11.

No new, but a better, functional result is obtained by the 798 structure, and the main improvement is due to the particular arrangement of the shank in relation to the hinge and spring member, which reflects in outward flexing of the shank at the forward portion thereof alongside

the plate portion of the hinge member, and does lessen wear and tear to some parts of the clamp.

12.

The Glencoe structure uses a rotating pivot which prevents rubbing contact of the shank with the fixed member of the clamp and means for attaching the shank to the hinge member, or fulcrum member, which permits flexibility of the shank equal in magnitude to that which would be expected in the 798 patent structure, however, the flexing of the shank is different in direction and location than that which occurs in the last named structure.

13.

The Graham 798 is an improvement patent in a somewhat crowded art, but is sufficiently different in detailed construction and operation to involve invention.

14.

Plaintiffs have admitted that Defendant's clamp of the type identified as Plaintiffs' Exhibit No. 3 does not infringe said Patent 798. Moreover, neither claim of the patent can be literally read upon Defendant's clamp of the type identified as Plaintiffs' Exhibit No. 4. Defendant's spring clamp, as exemplified by said Exhibit, has a plate between the shank and fixed member of the clamp, but the plate does not have a shank embracing portion thereon, the plate rocks against a portion of the fixed member instead of being pivoted on a pivot pin, and the forward ends of the plate and shank are not held together by a bolt and nut, and in these, as well as other respects, differs sufficiently from the limited equivalency range of the said Patent 798 so as to avoid infringement of the claims in said patent.

Conclusions of Law.

1.

The Defendant's admissions that one type of its clamp infringes Patent 2,493,811 entitles the Plaintiffs to a per-

manent injunction against the Defendant in respect to Claims 1, 2, 4, 5, 6, 7 and 8 of said patent, and an accounting for compensatory damages, as well as any further recovery authorized by law and awarded in the discretion of the Court.

2.

Patent No. 2,627,798 is valid, but not infringed in either claim by the Defendant's clamp, exemplified in Plaintiffs' Exhibit No. 4, and the complaint as to said patent should be dismissed.

Dated this the 12 day of July, 1957.

JOS. B. DOOLEY,
United States District Judge

JUDGMENT.

Filed July 12, 1957.

In the United States District Court for the Northern District of Texas, Amarillo Division.

William T. Graham and Graham-Hoeme Plow Co., Inc., Plaintiffs,

v. No. 1953—Civil.

Cockshutt Farm Equipment, Inc., a corporation, Defendant.

This cause having been tried upon proceedings in open Court without jury, and the Court having heard and considered the evidence, the briefs, and argument of counsel, and having made Findings of Fact and Conclusions of Law, and the Court being fully advised in the premises, it is

Ordered, Adjudged and Decreed, as follows:
As To Patent No. 2,493,811.

I.

Patent No. 2,493,811 is valid and by admission Defendant, Cockshutt Farm Equipment, Inc., has infringed Patent

No. 2,493,811 by sale of clamps of the type identified as Plaintiffs' Exhibit No. 3.

II.

By admission Defendant's clamps of the type identified as Plaintiffs' Exhibit No. 4 do not infringe Patent No. 2,493,811.

III.

Defendant, Cockshutt Farm Equipment, Inc., its officers confederates, associates, servants, attorneys, agents, clerks, and workmen and every person acting for and on behalf of said defendant are hereby perpetually enjoined and restrained from directly or indirectly making or causing to be made, selling or causing to be sold, using or causing to be used clamps of the type identified as Plaintiffs' Exhibit No. 3, or any other device embodying the invention defined by the Graham Patent No. 2,493,811.

IV.

The Plaintiffs, William T. Graham and Graham-Hoeme Plow Co., Inc., shall recover from the defendant, Cockshutt Farm Equipment, Inc., compensatory damages and the said Defendant, its officers, agents, clerks and employees shall submit to such oral examination as may be directed and shall preserve and produce as ordered all of said Defendant's books, vouchers, accounts and other documents relating in any wise to said infringement.

V.

The Court retains and reserves jurisdiction for the purpose of ascertaining and fixing the amount of compensatory damages and for the purpose of fixing and taxing the costs and the amount thereof to be paid by the respective parties.

As To Patent No. 2,627,798.

VI.

Patent No. 2,627,798 is valid; Plaintiff, William T. Graham is the owner thereof and Plaintiff, Graham-Hoeme Plow Co., Inc., is a licensee thereunder.

VII.

The Defendant, Cockshutt Farm Equipment, Inc., has not infringed patent No. 2,627,798 or either of the claims thereof.

VIII.

The complaint is dismissed as to patent No. 2,627,798, and all costs of suit as to said patent are charged against Plaintiff.

Signed this 12th day of July, 1957.

JOS. B. DOOLEY,
United States District Judge.

PLAINTIFFS' EXHIBIT R

643

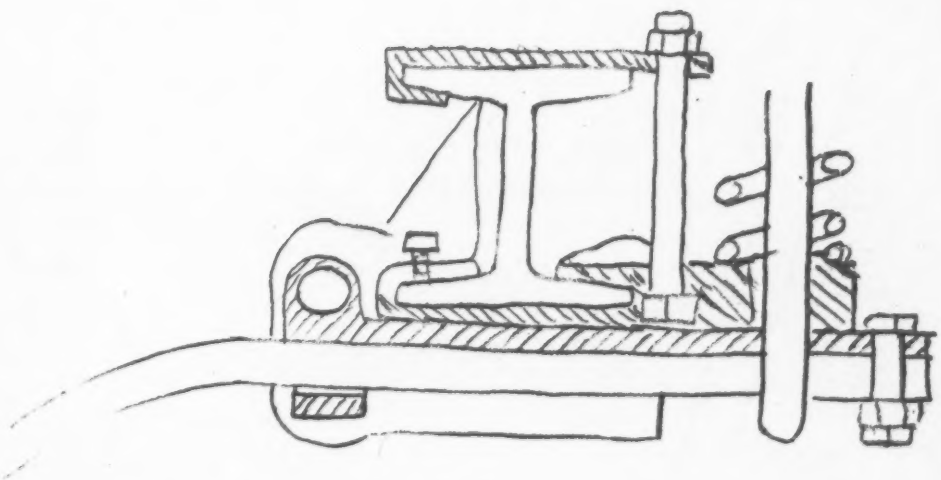

PLAINTIFFS' EXHIBIT S

645

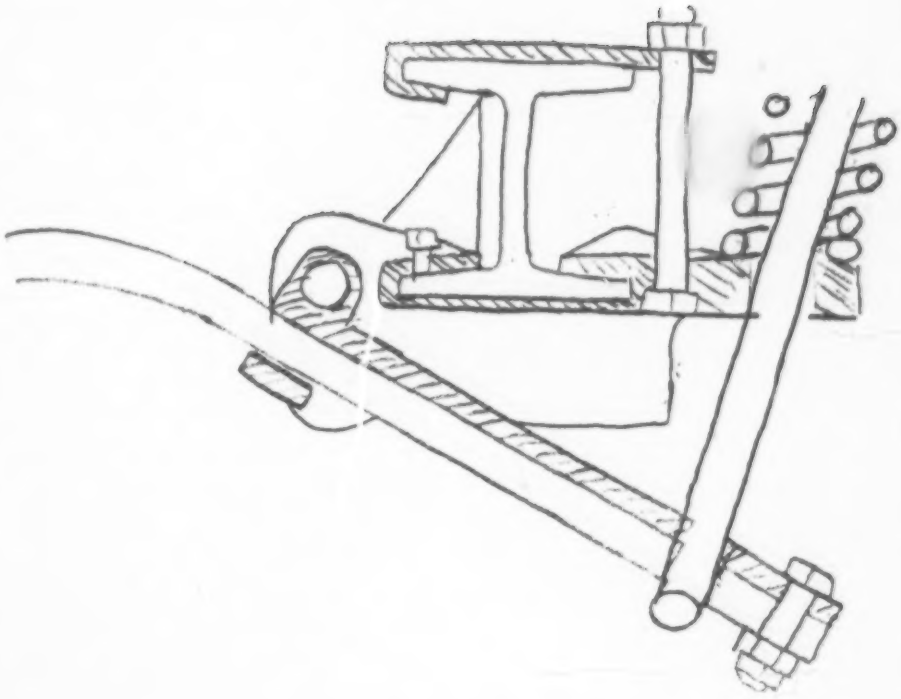

PLAINTIFFS' EXHIBIT T

647

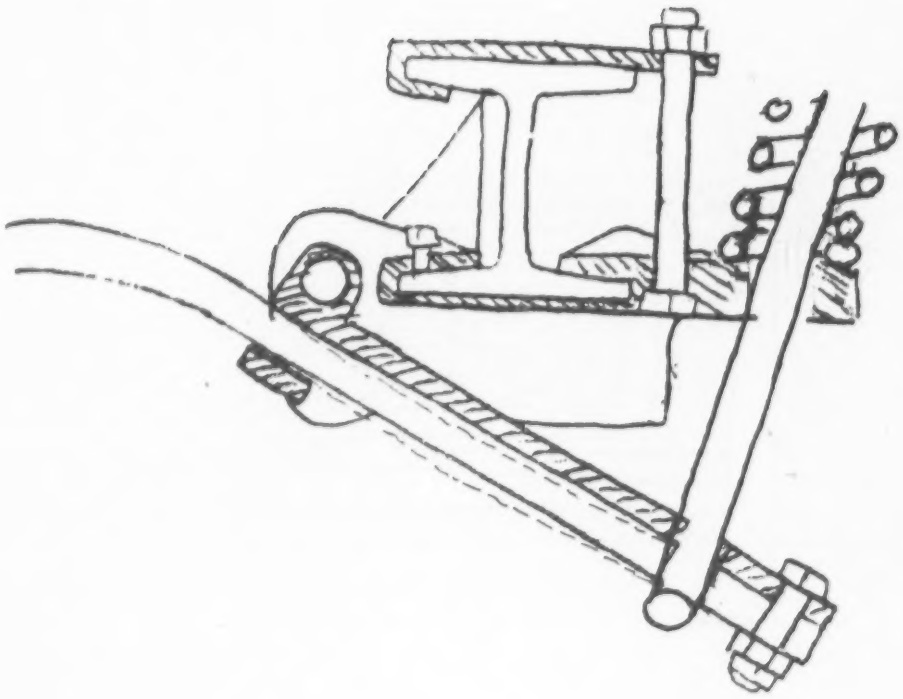

BEST COPY AVAILABLE

PUBLISHER'S NOTICE

Material on the following frames is
the best copy available to publisher.

PLAINTIFFS' EXHIBIT U

649

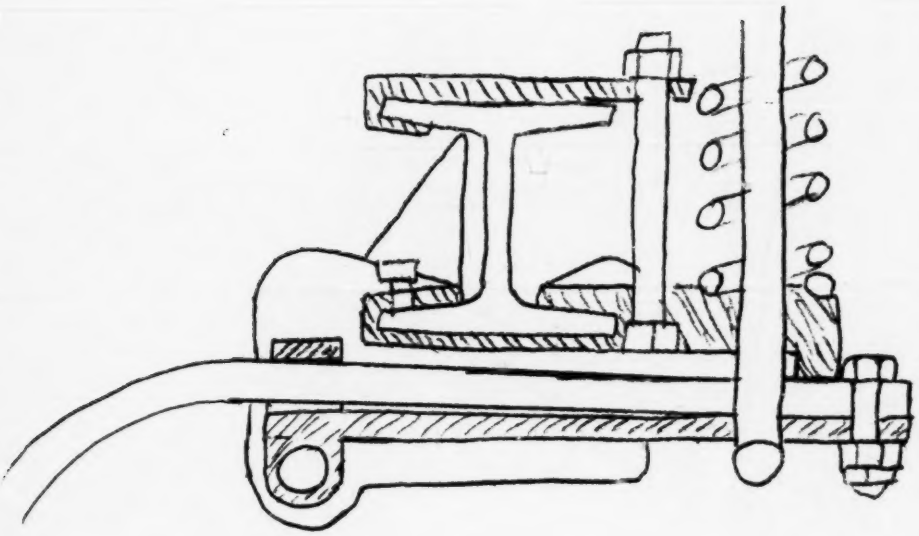

PLAINTIFFS EXHIBIT V

651

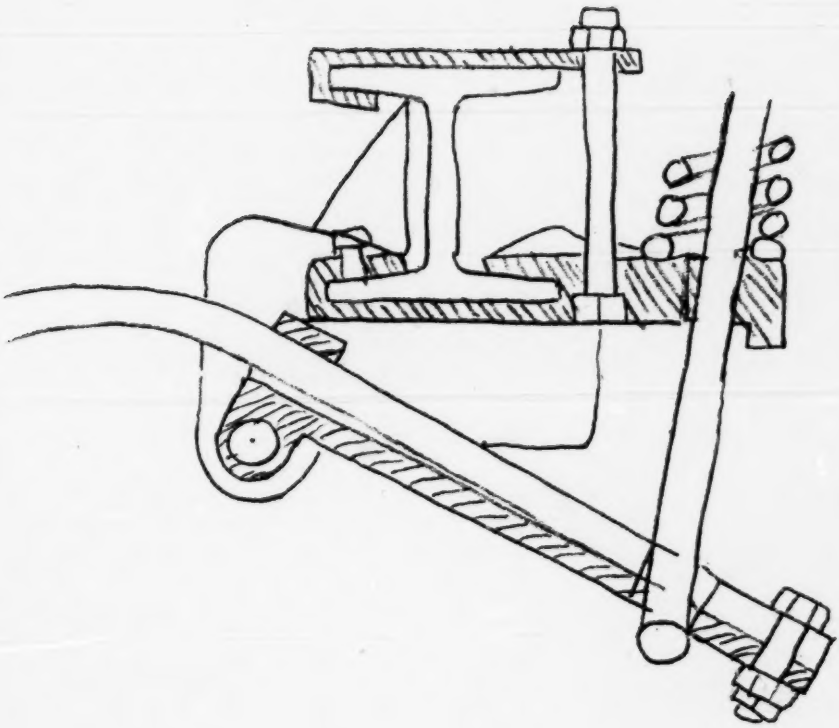

PLAINTIFFS' EXHIBIT W

653

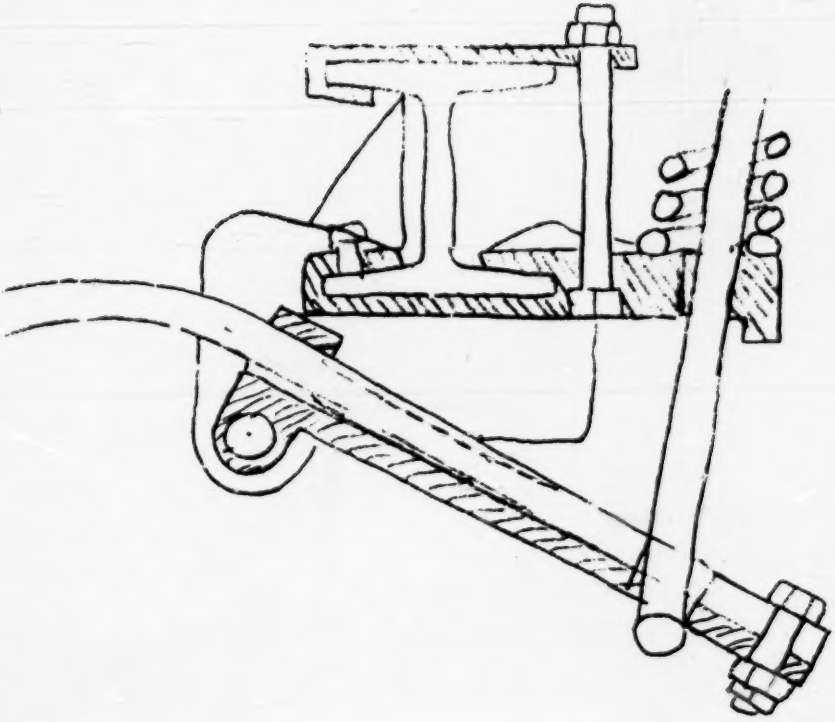

DEFENDANTS' EXHIBIT 1-A

655

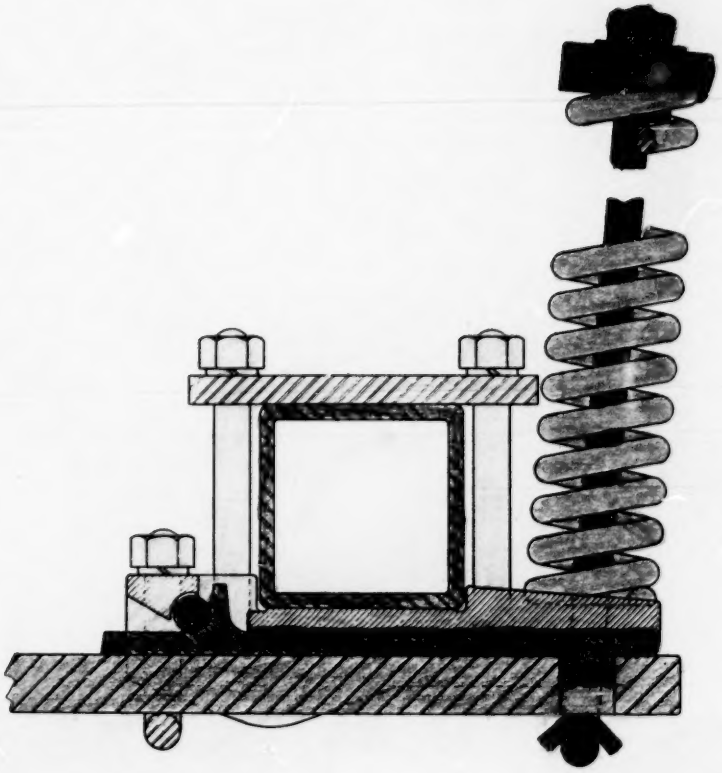

DEFENDANTS' EXHIBIT 1-B

657

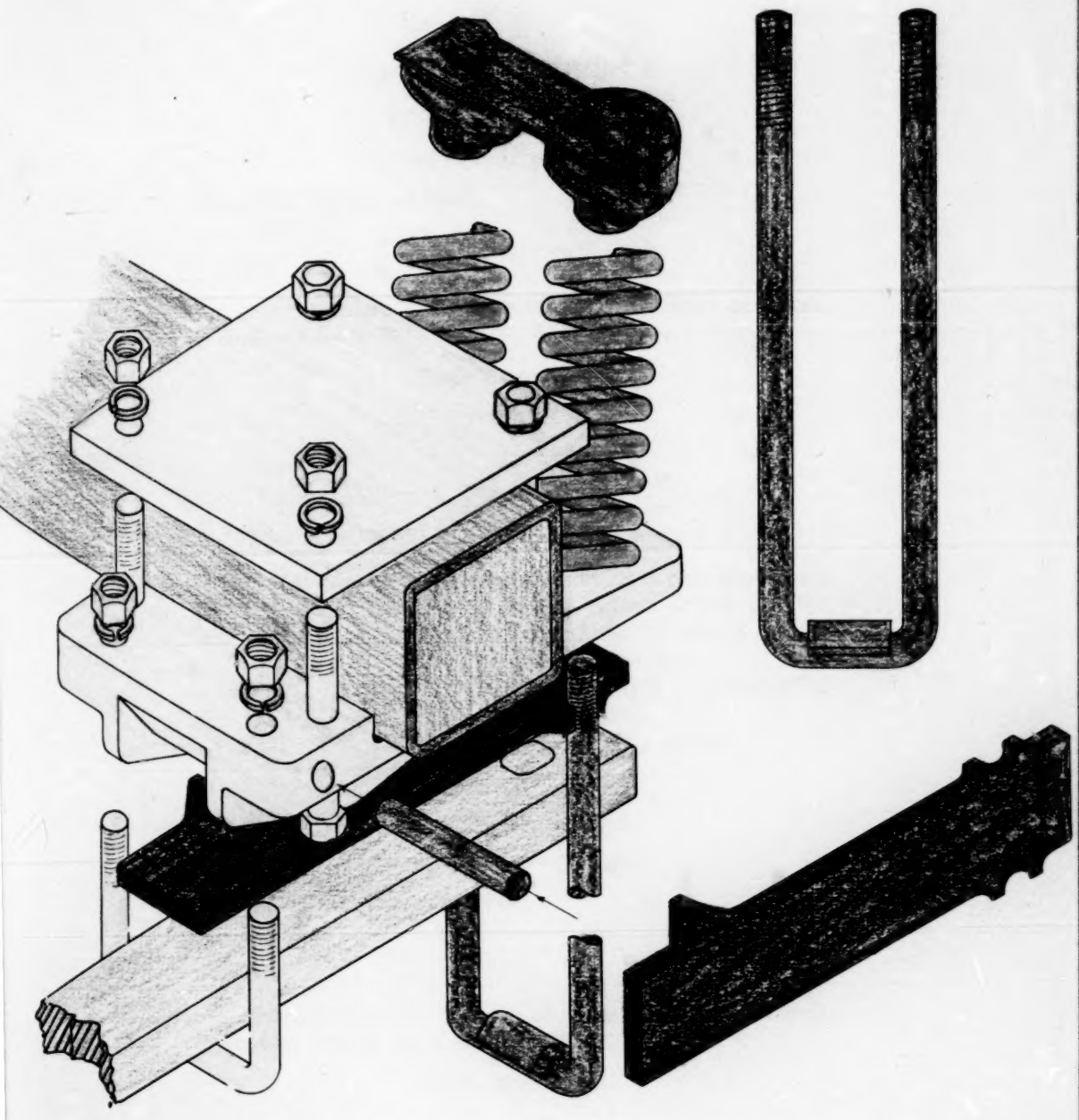

DEFENDANT'S EXHIBIT 4.

PATENT No. 2627798

Dated February 10, 1953

NUMBER (Series of 1948)
243893

DIV. ----------

Name William T. Graham of Amarillo, State of Texas, Invention Clamp for Vibrating Shank Plows.

Title Approved

/s/ APS
Examiner

Original

APPLICATION FILED COMPLETE, August 27, 1951

This is to certify that annexed hereto is a true copy from the records of the United States Patent Office of File Wrapper and Contents of the file identified above.

By authority of the
COMMISSIONER OF PATENTS
/s/ F. R. Oliver
Certifying Officer

Seal

Date March 21, 1962

PATENT No. 2627798

Dated February 10, 1953

NUMBER (Series of 1948)
243893

DIV. ----------

Name William T. Graham of Amarillo, State of Texas, Invention Clamp for Vibrating Shank Plows.

Title Approved

/s/ APS
Examiner

Original

APPLICATION FILED COMPLETE, August 27, 1951

Parts of Application Filed

34601

| | |
|---|---|
| Petition, Specification Oath, First Fee $30 4 sheets Drawings, | August 27, 1951 |

Examined and passed for Issue December 3, 1952, A. Joseph Goldberg Exr. Div. 1.

Notice of Allowance December 3, 1952, by Commissioner.

Final Fee $30.00, January 6, 1953.

Attorney FISHBURN & MULLENDORE, 1216-17 COMMERCE TRUST BUILDING, KANSAS CITY 6, MISSOURI.

Associate Attorney _____

No. of Claims Allowed 2 Print Claim 1 in O. G. Glass 97-184.

FISHBURN, MULLENDORE & GOLD

*Successors to*
ARTHUR C. BROWN
Patent, Trademark & Copyright Causes
Suite 1217 Commerce Trust Building
Kansas City 6, Mo.
Telephone VIctor 1588

Claude A. Fishburn
Paul E. Mullendore
Orville O. Gold

August 24, 1951

Hon. Commissioner of Patents
Washington 25, D. C.

Sir:

Enclosed find necessary papers in the application of William T. Graham for patent on "Clamp for Vibrating Shank Plow", which were executed July 29, 1951.

Our check No. 2759 is also enclosed to cover, among other items, the filing fee of $30.

Acknowledgment of receipt is respectfully requested.

Respectfully submitted,

FISHBURN AND MULLENDORE
By /s/ Orville O. Gold

15,270

This invention relates to a plow of a type including ground conditiong tools that are carried on shanks having support on a mobile frame and which work under the surface to heave and break the soil and form alternate ridges and furrows having exposed surfaces composed of sod, straw and clods normally occurring on a field.

When the field contains rocks and other obstructions, it is desirable to mount the shanks of the ground working tools for rocking movement on the frame of the plow so that the ground working tools will pass freely over the obstructions and return to normal plowing position without injury to the plow.

It is therefore the principal object of the present invention to provide a simple and reliable mounting for attaching the shanks of the ground working tools to the mobile frame whereby the shanks may rock when necessary and vibrate under action when the plow is working in rocky and/or heavy soils. It is also an object of the invention to provide a mounting which includes a fixed part and a movable part pivotally connected with the fixed part and having a shank attaching portion to which the shank is rigidly secured and resiliently retained on the fixed part.

In accomplishing these and other objects of the invention hereinafter pointed out, I have provided improved structure, the preferred form of which is illustrated in the accompanying drawings, wherein:

Fig. 1 is a vertical section through a frame member of a plow showing a mounting constructed in accordance with the present invention for resiliently attaching the shanks of the ground working tools whereby the shanks are

adapted to rock relatively to the frame when passing over an obstruction and return to normal position after the obstruction has been passed.

Fig. 2 is an enlarged longitudinal section through the frame member, the plow shank and the mounting by which the shank is pivotally connected with the frame member and resiliently held in normal plowing position, the section being taken on the line 2—2 of fig. 4.

Fig. 3 is a perspective view of the structure disclosed in Fig. 2.

Fig. 4 is a rear elevational view, with the shank being shown in cross section.

Fig. 5 is a front elevational view.

Fig. 6 is a longitudinal section similar to Fig. 2 but showing the shank and movable part of the mounting rocked relatively to the fixed part of the mounting.

Fig. 7 is a perspective view of the parts shown in disconnected and spaced relation to better illustrate the construction thereof.

Referring more in detail to the drawings:

1 designates a part of a plow frame to which the shanks 2 of the ground working tools 3 are attached by mountings generally indicated 4 and constructed in accordance with the present invention. Since all of the tool, shank and mounting assemblies are of like construction, only one of them is illustrated and described, it being understood that the plow may include one or more of the ground working devices.

The frame member 1, which composes a part of a plow frame, is illustrated as comprising an I-beam having upper and lower horizontally arranged flanges 5 and 6 that are interconnected by a vertical web 7. The shank 2 is formed of metal bar stock of substantially rectangular cross section and is of a width and thickness to provide the necessary strength and a certain amount of resiliency. The bar stock is shaped to provide a substantially straight end por-

tion 8 extending in the direction of travel of the machine and a rearwardly and downwardly curved portion 9 terminating in a forwardly curved end 10 to carry the ground working tool 3. The straight end 8 of the shank extends transversely with respect to the frame member 1 and is adapted to rock transversely relatively to travel of the plow.

Each mounting 4 includes a fixed part 11 and a movable part 12. The fixed part 11 has a substantially flat plate portion 13 substantially corresponding in length to the width of the lower flange 6 of the I-beam and which is closely engaged therewith by flanges 14 and 15 extending over the upper face of the lower flange 6, as best shown in Fig. 2. One of the flanges, for example the flange 14 preferably carries a set screw 16 that has its shank 17 threaded in an opening 18 of the flange to engage the upper face of the flange 6 and draw the plate portion 13 of the fixed part into engagement with the lower face of the flange and assure a firm connection with the I-beam.

Projecting forwardly from the plate portion 13 and flange 15 is a relatively thicker extension 19 provided with a slot-like opening 20 extending through a boss 21 that forms a spring seat 22. Depending from the under side of the plate portion 13 and extending forwardly of a portion of the extension 19 are flanges 23 and 24 spaced apart to form a downwardly opening channel or way 25 therebetween and in which the movable part 12 of the mounting is adapted to rock along with the forward end portion 8 of the Shank 2. Projecting rearwardly from the spaced flanges 23 and 24 are ears 26 and 27 that extend upwardly over the flange 14 and carry webs 28 that support abutments 29 which engage the rear face of the I-beam web 7 for distributing forces acting on the shank to the upper portion of the I-beam. The under side of the plate extension 19 may be reinforced by bosses 30 that extend forwardly on opposite sides of the channel or way 25, as shown in Figs. 5 and 7. It is obvious that the flange 14 of the fixed part is reinforced by the ears and webs 28. To reinforce the forward flange 15 the upper face of that flange and the extension 19 may be provided with spaced ribs 31 and 32, as best shown in Fig. 7.

In order to further attach the fixed part to the I-beam, the mounting may include a hook member 33 having a plate portion 34 that extends over the upper face of the upper I-beam flange 5 and which has an opening 35 aligning with an opening 36 in the forward extension of the fixed part to pass the shank 37 of a bolt 38, the head 39 of the bolt being countersunk within a recess 40 that is formed on the under face of the extension 19, as best shown in Figs. 2 and 6. The opposite end of the plate portion 33 has a downwardly and forwardly extending hook 41 that engages under the upper flange of the I-beam. The bolt 38 has a nut 42 threaded on the shank thereof to draw the parts tightly against the I-beam as shown in Figs. 2 and 6.

The ears 26 and 27 are provided above the level of the under face 43 of the plate portion 13 with registering openings 44 and 45 to mount the ends 46 and 47 of a transverse pin 48, the pin being retained in position by cotter pins 49 extending through suitable openings 50 in the projecting ends of the pin.

The movable part 12 includes an elongated plate portion 51 having a width to move freely within the channel or way 25 and the rear end has an upwardly extending transverse ear 52 that is provided with an opening 53 for passing the pin 48 to pivotally connect the movable part 12 with the fixed part 11. The plate portion 51 extends forwardly of the way and beyond the forward end of the extension 19 to accommodate an opening 54 that registers with a corresponding but slightly larger opening 55 in the end portion 8 of the shank 2 to pass a fastening device 56. The movable part also includes a depending loop 57 having a rectangular passageway 58 substantially conforming to the cross sectional shape of the end portion of the shank whereby the end portion 8 of the shank is passed therethrough and embraced by the loop portion to rock with the movable part on the pivot pin 48. The nut 56' of the bolt may be set up snug but is left sufficiently loose to permit slight longitudinal movement of the end portion of the shank relatively to the pivotal part of the clamp.

The plow shank and movable part 12 of the mounting are resiliently retained in normal position with the upper face 59 of the plate portion 51 in clamping engagement

with the under face 60 of the fixed part 11. This is effected by a resilient connection as now to be described. The end portion 8 of the shank and plate portion 51 of the movable part have elongated openings 61 and 62 that register with the slot-like opening 20 of the fixed part, as shown in Fig. 2. Extending through the registering openings 60, 61 and 20 is a rod 63 having a transverse head 64 on its lower end engaging under the end portion 8 of the plow shank. Sleeved over the rod and having one end engaging the spring seat 22 is a coil spring 65 having its upper end connected with the upper end of the rod by a washer-like spring seat 66 retained on the upper end of the rod by a nut 67, the nut being tightened on the rod to compress the spring 65 sufficiently to retain the shank 2 and movable part 12 in normal position but to allow rocking movement of the movable part when the shank is rocked. This rocking movement of the shank will cause the movable part 12 to pivot away from the fixed part 11 along with the forward end portion 8 of the shank 2 to effect compression of the spring 65 so that the stored up action in the spring will return the shank and movable part of the clamp to normal position with the plate portion 51 resiliently clamped against the fixed part 11 of the mounting as shown in Fig. 2.

In assembling the mounting, the fixed part 11 is slid over an end of the I-beam 1 and moved to the desired location thereon along with other of the mountings not shown. The hook member 33 is then placed over the upper flange 5 of the I-beam with the hook 41 engaged with the flange after which the bolt 38 is applied and the nut 42 tightened to draw the fixed part 11 tightly against the lower flange 6 of the I-beam. The set screw 16 may then be tightened to further secure the fixed part of the mounting. The end portion 8 of the plow shank 2 is then passed through the opening 57 of the loop portion of the movable part 12 until the opening 55 registers with the opening 54. The fastening device 56 is then inserted through the registering openings 54 and 55 to secure the shank to the movable part of the mounting. The movable part 12 and forward end 8 of the shank are then placed within the downwardly opening way 25 of the fixed part 11 and the pivot pin 48 is

passed through the openings 44, 45 and 53 in the registering ears 26, 27 and 52 after which the cotter pins 49 are inserted in the openings 50.

The rod 63 is then passed through the openings 61, 62, and 20 and the coil spring 65 is sleeved thereover to engage the seat 22. The spring seat 66 is then applied over the upper threaded end of the rod to engage the upper end of the spring after which the nut 67 is applied to compress the spring and draw the movable part 12 into clamping engagement with the fixed part 11, sufficient tension having been applied to normally retain the shank and tool 3 in plowing position.

When the plow is in operation the ground working tool 3 may engage an obstruction. However, the tool is free to ride over the top of the obstruction upon upward rocking movement of the shank 2, the shank moving with the movable part 12 of the mounting about the axis of the pivot pin 48 so that the forward end 8 of the shank moves downwardly to cause the rod 63 to further compress the spring 65 whereby the spring 65 is enabled to return the shank 2 and movable part 12 to their normal position after the ground working tool has passed over the obstruction.

During operation of the plow, there is also a vibratory or pumping movement of the ground working tool that acts to reduce the draft and facilitate operation of the ground working tool in plowing up and heaving the soil to form the ridges and furrows. The pumping action of the ground working tools work the fine soil downwardly to form the seed bed and the larger clods, straw and the other mulching materials are worked to the surface for covering the fine soil and serving as a mulch to preserve the moisture.

From the foregoing it is obvious that I have provided a plow structure wherein the shanks of the ground working tools are attached to the plow frame in a manner to permit the desired rocking action of the plow shanks in a simple and efficient manner and without producing destructive strains on the plow frame or excessive wear on the mounting parts.

What I claim and desire to secure by Letters Patent is:

1. In a plow having a frame and a ground working tool provided with a shank adapted to rock relatively to the frame when the plow is in operation in a forward direction, a mounting for attaching and supporting the shank of the ground working tool from the frame including a part adapted to be fixed to the frame and a part pivotally mounted on the fixed part and having a plate portion extending forwardly from said pivotal mounting along an end portion of the shank and in movable engagement with the fixed part, means on the pivotal part embracing the end portion of the shank, and resilient means interconnecting said parts and engaging the end portion of the shank to hold the pivotal part in yielding contact with the fixed part so that when the shank is rocked the end portion of the shank will cause the pivotal part to move away from the fixed part along said end portion of the shank and back to normal position with said plate portion in contact with the fixed part.

2. In a plow having a frame and a ground working tool provided with a shank adapted to rock relatively to the frame when the plow is in operation in a forward direction, a mounting for attaching and supporting the shank of the ground working tool from the frame including a part adapted to be fixed to the frame and a part pivotally mounted on the fixed part and having a plate portion extending forwardly from said pivotal mounting along an end portion of the shank and in movable engagement with the fixed part, means connecting the end portion of the shank to said plate portion to pivot therewith, and resilient means connecting said parts to hold the pivotal part in yielding contact with the fixed part so that when the shank is rocked the end portion of the shank will cause the pivotal part to move away from the fixed part along said portion of the shank and back to normal position with said plate portion in contact with the fixed part.

3. In a plow having a frame and a ground working tool provided with a shank adapted to rock relatively to the frame when the plow is in operation in a forward direction, a mounting for attaching and supporting the shank

of the ground working tool from the frame including a part adapted to be fixed to the frame and a part pivotally mounted on the fixed part and having a plate portion extending forwardly from said pivotal mounting along an end portion of the shank and in movable engagement with the fixed part, said pivotal part having a face corresponding with the form of the end portion of the shank and provided with a loop for embracing said end portion of the shank to retain the end portion of the shank in contact with said face of the plate portion, and resilient means connecting said parts to hold the pivotal part in yielding contact with the fixed part so that when the shank is rocked the end portion of the shank will cause the pivotal part to move away from the fixed part along with said end portion of the shank and back to normal position with said plate portion in clamping contact with the fixed part.

4. In a plow having a frame and a ground working tool provided with a shank adapted to rock relatively to the frame when the plow is in operation in a forward direction, a mounting for attaching and supporting the shank of the ground working tool from the frame including a part adapted to be fixed to the frame and a part pivotally mounted on the fixed part and having a plate portion extending forwardly from said pivotal mounting along an end portion of the shank and in movable engagement with the fixed part, a loop extending from the pivotal part below said pivotal connection for embracing the end portion of the shank, a fastening device cooperating with said loop for securing the end portion of the shank to the plate portion, and resilient means connecting said parts to hold the pivotal part in yielding contact with the fixed part so that when the shank is rocked the end portion of the shank will cause the pivotal part to move away from the fixed part along with said end portion of the shank and back to normal position with said plate portion in clamping contact with the fixed part.

5. In a plow having a frame and a ground working tool provided with a shank adapted to rock relatively to the frame when the plow is in operation in a forward direction,

a mounting for attaching and supporting the shank of the ground working tool from the frame including a part adapted to be fixed to the frame and a part pivotally mounted on the fixed part and having a shank attaching portion extending forwardly from said pivotal mounting along an end portion of the shank and in movable engagement with the fixed part, said pivotal part having a portion embracing said end portion of the shank for retaining said end portion of the shank in contact with the shank attaching portion to pivot therewith, said end portion of the shank and said parts having registering openings spaced forwardly from the pivotal mounting, a coil spring having one end seated on one of said parts and a rod extending through said registering openings and having means on the ends thereof for respectively engaging the end portion of the shank and the other end of said spring to yieldingly hold the shank attaching portion of the pivotal part in contact with the fixed part so that when the shank is rocked the end portion of the shank will cause the pivotal part to move away from the fixed part along with said end portion and back to normal position with said shank attaching portion in clamping relation with the fixed part.

6. In a plow having a frame and a ground working tool provided with a shank adapted to rock relatively to the frame when the plow is in operation in a forward direction, a mounting for attaching and supporting the shank of the ground working tool from the frame including a part adapted to be fixed to the frame and a part pivotally mounted on the fixed part and having a plate portion extending forwardly from said pivotal mounting along an end portion of the shank and in movable engagement with the fixed part, means for securing said end portion of the shank to the plate portion to pivot therewith, said end portion of the shank and said parts having registering openings spaced from the pivotal mounting, a coil spring having one end seated on one of said parts and a rod extending through said registering openings and having means on the ends thereof for engaging respectively the end portion of the shank and the other end of said spring to yieldingly hold the plate portion of the pivotal part in contact with

the fixed part so that when the shank is rocked the end portion of the shank will cause the pivotal part to move away from the fixed part along the said end portion and back to normal position with said plate portion in contact with the fixed part.

7. In a plow having a frame and a ground working tool provided with a shank adapted to rock relatively to the frame when the plow is in operation in a forward direction, a mounting for attaching and supporting the shank of the ground working tool from the frame including a part adapted to be fixed to the frame and having spaced apart depending flanges to form a downwardly opening way to receive an end portion of the shank and having spaced apart ears extending rearwardly in substantially aligning registry with said flanges, said mounting also including a movable part having a transverse ear between said spaced apart ears of the fixed part and having a shank engaging portion extending in said way, a pivot pin extending through said spaced and transverse ears for pivotally connecting the movable part with the fixed part, means connecting the end portion of the shank to the shank attaching portion, and resilient means connecting said parts to hold the movable part in yielding contact with the fixed part so that when the shank is rocked the end portion of the shank will cause the movable part to move downwardly within said way along with said end portion of the shank and back to contact with the fixed part.

8. In a plow having a frame and a ground working tool provided with a shank adapted to rock relatively to the frame when the plow is in operation in a forward direction, a mounting for attaching and supporting the shank of the ground working tool from the frame including a part adapted to be fixed to the frame and having spaced apart depending flanges to form a downwardly opening way to receive an end portion of the shank and having spaced apart ears extending rearwardly from said flanges, said mounting also including a movable part having a transverse ear engaged between said spaced apart ears of the fixed part, a pivot pin extending through said spaced and

transverse ears for pivotally connecting the movable part with the fixed part, said movable part having a plate portion extending forwardly within said way and along the end portion of the shank, said movable part having a portion below said ears for embracing said end portion of the shank, said parts and end portion of the shank having registering openings, a rod extending through said openings and having a head engaging under the end portion of the shank, a coil spring having one end seated on the fixed part and having the other end connected with the rod to hold the movable part in yielding contact with the fixed part so that when the shank is rocked the end portion of the shank will cause the movable part to pivot away from the fixed part along with said end portion of the shank and back to normal position with said plate portion in clamping contact with the fixed part.

9. In a plow having a frame and a ground working tool provided with a shank adapted to rock relatively to the frame when the plow is in operation in a forward direction, a mounting for attaching and supporting the shank of the ground workng tool from the frame including a part adapted to be fixed to the frame and having spaced apart depending flanges to form a downwardly opening way to receive an end portion of the shank and having spaced apart ears extending rearwardly from said flanges, said mounting also including a movable part having a transverse ear engaged between said spaced apart ears of the fixed part, a pivot pin extending through said spaced and transverse ears for pivotally connecting the movable part with the fixed part, said movable part having a plate portion extending forwardly within said way and along the end portion of the shank, said movable part having a portion below said ears for embracing said end portion of the shank, a fastening device extending through said plate portion in the shank to cooperate with said embracing portion to secure the end portion of the shank to the plate portion of the movable part, said parts and end portion of the shank having registering openings, a rod extending through said openings and having a head engaging under the end portion of the shank, a coil spring having one end seated

on the fixed part and having the other end connected with the rod to hold the movable part in yielding contact with the fixed part so that when the shank is rocked the end portion of the shank will cause the movable part to pivot away from the fixed part along with said end portion of the shank and back to normal position with said plate portion in clamping contact with the fixed part.

10. A mounting for attaching and supporting the shank of a ground working tool to an I-beam frame member of a plow including a part adapted to be fixed to the lower flange of the I-beam and a part pivotally mounted on the fixed part and having a plate portion extending forwardly from said pivotal mounting along an end portion of the shank and in movable engagement with the fixed part, means on the pivotal part embracing the end portion of the shank, resilient means interconnecting said parts and engaging the end portion of the shank to hold the pivotal part in yielding contact with the fixed part so that when the shank is rocked the end portion of the shank will cause the pivotal part to move away from the fixed part along said end portion of the shank and back to normal position with said plate portion in contact with the fixed part, a plate member adapted to extend over the upper flange of the I-beam and having a hook portion engaging under said flange at the side of the I-beam, and a bolt connecting the plate member at the opposite side of the I-beam with the fixed part.

11. A mounting for attaching and supporting the shank of a ground working tool to an I-beam frame member of a plow including a part adapted to be fixed to the lower flange of the I-beam and a part pivotally mounted on the fixed part and having a plate portion extending forwardly from said pivotal mounting along an end portion of the shank and in movable engagement with the fixed part, means on the pivotal part embracing the end portion of the shank, resilent means interconnecting said parts and engaging the end portion of the shank to hold the pivotal part in yielding contact with the fixed part so that when the shank is rocked the end portion of the shank will cause the pivotal part to move away from the fixed part along

said end portion of the shank and back to normal position with said plate portion in contact with the fixed part, and an abutment on the fixed part above the pivotal mounting and adapted for engaging the web portion of the I-beam.

12. A mounting for attaching and supporting the shank of a ground working tool to an I-beam frame member of a plow including a part adapted to be fixed to the lower flange of the I-beam and a part pivotally mounted on the fixed part and having a plate portion extending forwardly from said pivotal mounting along an end portion of the shank and in movable engagement with the fixed part, means on the pivotal part embracing the end portion of the shank, resilient means interconnecting said parts and engaging the end portion of the shank to hold the pivotal part in yielding contact with the fixed part so that when the shank is rocked the end portion of the shank will cause the pivotal part to move away from the fixed part along said end portion of the shank and back to normal position with said plate portion in contact with the fixed part, an abutment on the fixed part above the pivotal mounting and adapted for engaging the web portion of the I-beam, a plate member adapted to extend over the upper flange of the I-beam and having a hook portion engaging under said flange at the side of the I-beam above said abutment, and a bolt connecting the plate member at the opposite side of the I-beam with the fixed part.

SOLE

OATH, POWER OF ATTORNEY, AND PETITION

2834

Being duly sworn, I, William T. Graham depose and say that I am a citizen of the United States of America residing at Amarillo, in the County of Potter State of Texas; that I have read the foregoing specification and claims and I verily believe I am the original, first, and sole inventor of the invention or discovery in "CLAMP FOR VIBRATING SHANK PLOW" described and claimed therein; that I do not know and do not believe that this invention was ever known or used before my invention or discovery thereof, or patented or described in any printed publication in

any country before my invention or discovery thereof, or more than one year prior to this application, or in public use or on sale in the United States for more than one year prior to this application; that this invention or discovery has not been patented in any country foreign to the United States on an application filed by me or my legal representatives or assigns more than twelve months before this application; and that no application for patent on this invention or discovery has been filed by me or my representatives or assigns in any country foreign to the United States, except as follows:

And I hereby appoint the firm of FISHBURN & MULLENDORE consisting of Claude A. Fishburn and Paul E. Mullendore, of Kansas City, Missouri, Registration No. 15448, my attorneys with full power of substitution and revocation, to prosecute this application and to transact all business in the Patent Office connected therewith.

Wherefore I pray that Letters Patent be granted to me for the invention or discovery described and claimed in the foregoing specification and claims, and I hereby subscribe my name to the foregoing specification and claims, oath, power of attorney, and this petition, this 29th day of July, 1951.

Inventor William T. Graham
First name / Middle initial / Last name

Post Office Address
c/o Graham-Hoeme Mfg. Co.
P. O. Box 2050
Amarillo, Texas

State of TEXAS )
) SS
County of POTTER )

Before me personally appeared William T. Graham, to me known to be the person described in the above application for patent, who signed the foregoing instrument in my presence, and made oath before me to the allegations

set forth therein as being under oath, on the day and year aforesaid.

/s/ F. W. Span
Notary Public

SEAL

My commission expires 6-1-'52.

This form may be executed only when attached to a complete application as the last page thereof.

Approved Single Signature Form
Sole Inventor
(No. 290)

Address all Communications to
FISHBURN & MULLENDORE

1216-17 Commerce Trust Bldg. Kansas City 6, Mo.

677

DIV. 1 243893

PRINT OF DRAWING AS ORIGINALLY FILED

Fig. 1.

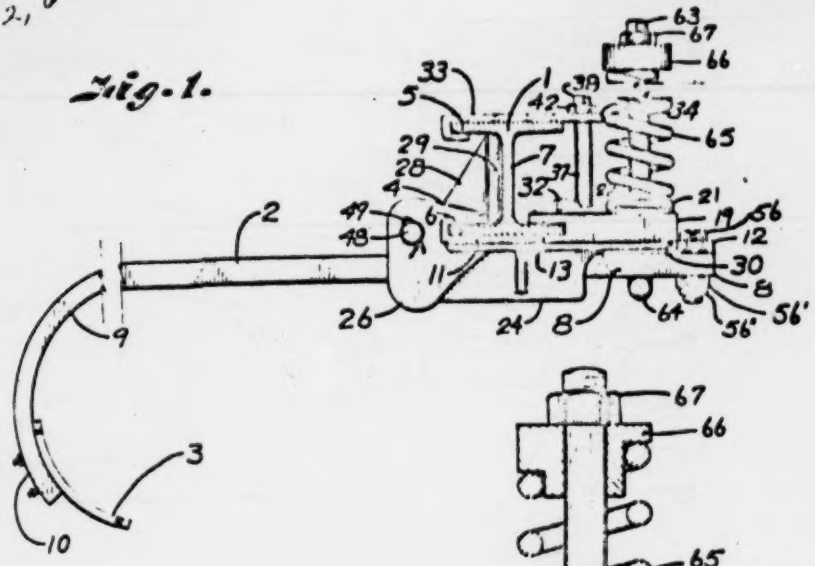


Fig. 2.

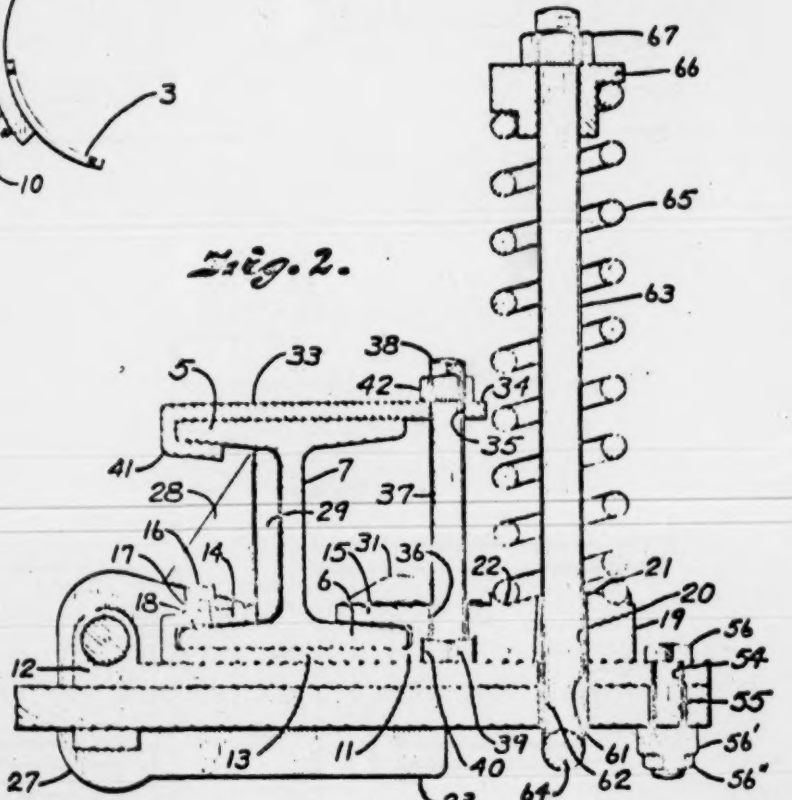


INVENTOR.
William T. Graham.
BY
Fishburn & Gallandore
ATTORNEYS.

DEC 3 1952

243893

679

DIV. I

242893

PRINT OF DRAWING AS ORIGINALLY FILED

Fig. 3.

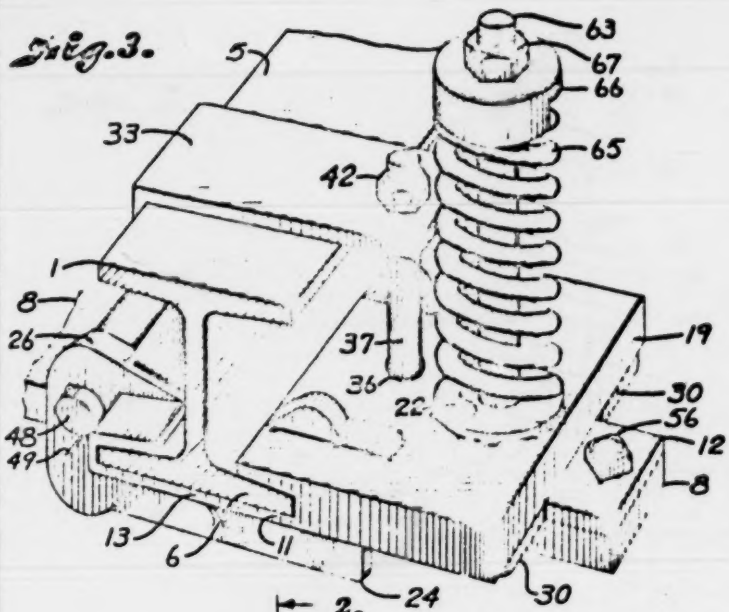


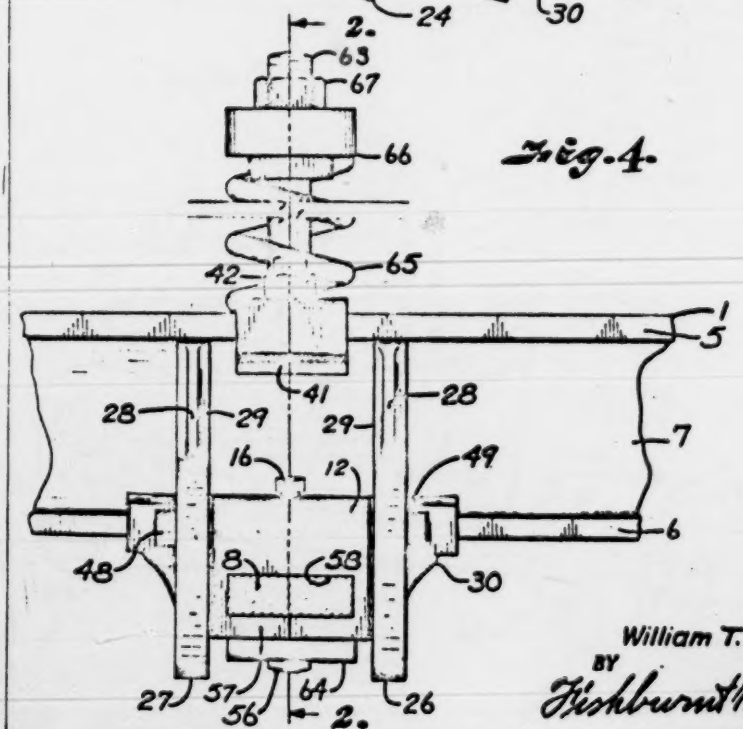


Fig. 4.

INVENTOR.
William T. Graham.
BY
Fishburn & Mullendore
ATTORNEYS.

243893

24

PRINT OF DRAWING AS ORIGINALLY FILED

Fig. 5.

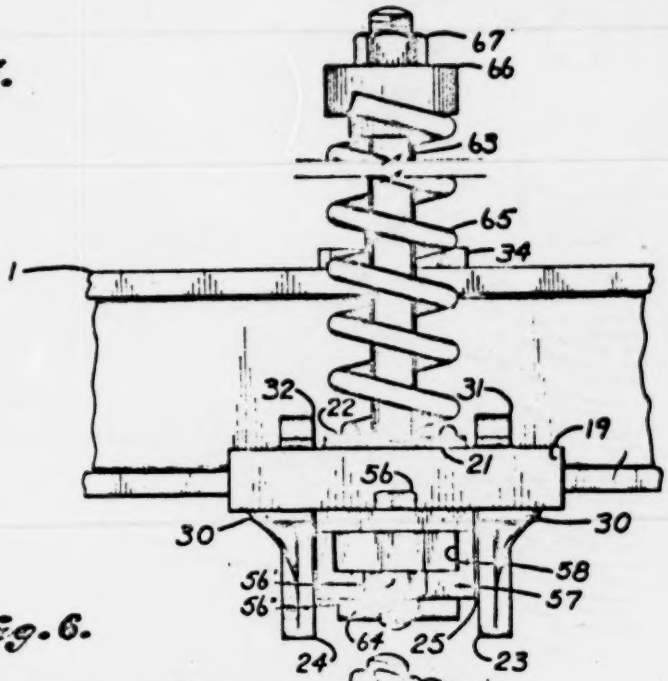


Fig. 6.

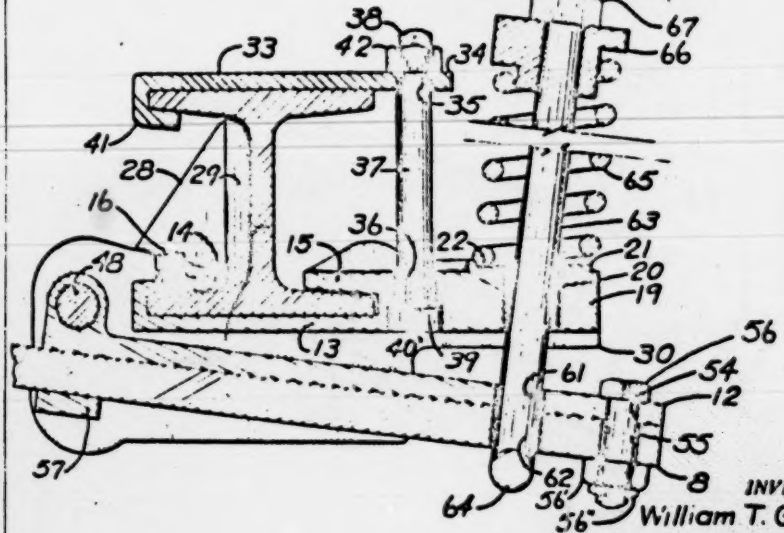


INVENTOR.
William T. Grahain.
BY
Fishburn & Mullendore
ATTORNEYS.

PRINT OF DRAWING AS ORIGINALLY FILED

Fig. 7.

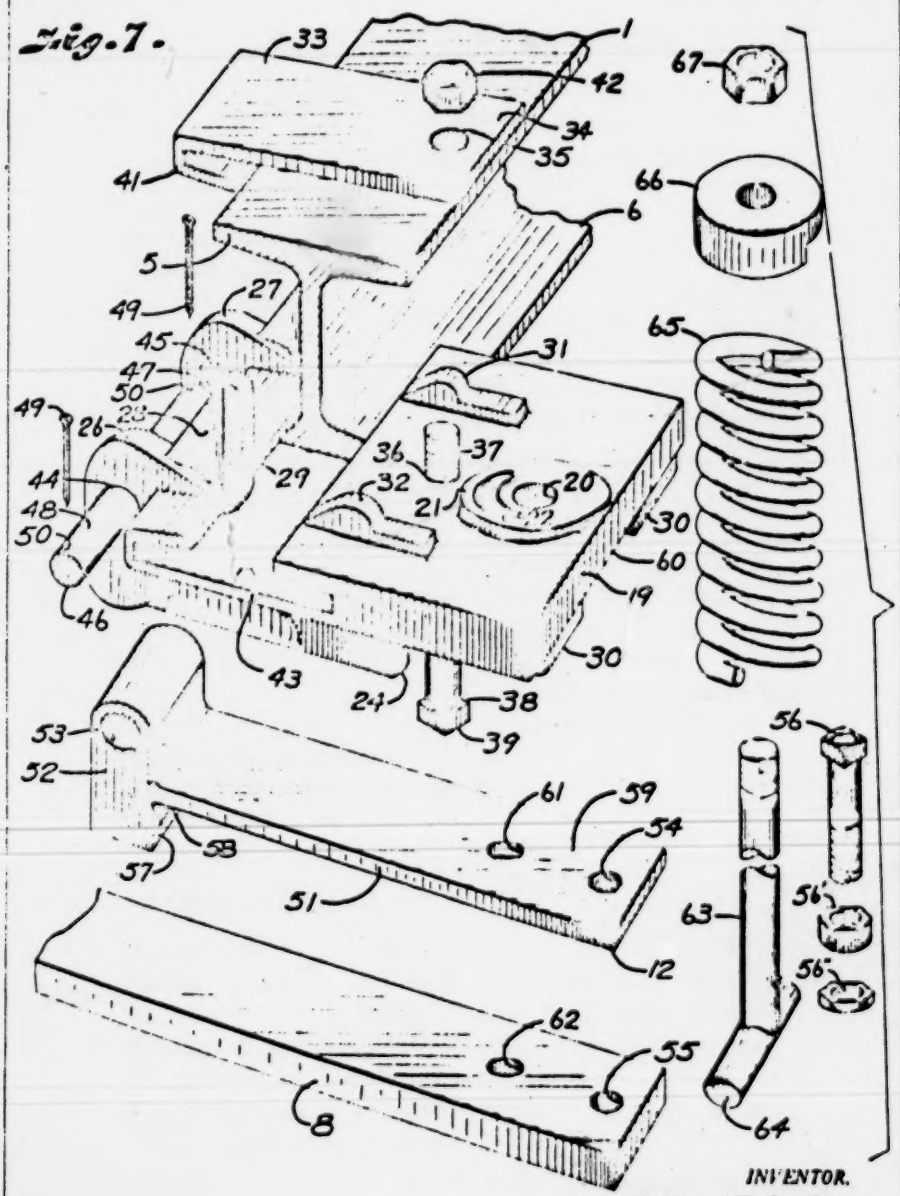


INVENTOR.
William T. Graham.
BY
Fishburn & Mullendore
ATTORNEYS.

DEPARTMENT OF COMMERCE

United States Patent Office
WASHINGTON

(Mailed April 23, 1952, Patent Examining Division 1.)
Address only

The Commissioner of Patents
Washington 25, D. C.

Paper No. 3

All communications respecting this application should give the serial number, date of filing and name of the applicant.

Please find below a communication from the EXAMINER in charge of this application.

/s/ John A. Marzall
Commissioner of Patents

| | |
|---|---|
| Applicant: | William T. Graham |
| Ser. No. | 243,893 |
| Filed | August 27, 1951 |
| For | CLAMP FOR VIBRATING SHANK PLOW |

Fishburn & Mullendore
1216-17 Commerce Trust Bldg.
Kansas City 6, Mo.

This application has been examined.

References made of record:

| | | | | |
|---|---|---|---|---|
| Drader et al | 417,775 | Dec. | 24, 1889 | 55-36 |
| Pfeifer | 2,014,451 | Sept. | 17, 1935 | 97-Clamp-8 |
| Graham | 2,493,811 | Jan. | 10, 1950 | 97-184 |
| Petersen (Denmark) (2 pgs. spec.; 1 sht. drwgs.) | 57,391 | Mar. | 18, 1940 | 97-184 |
| Traeger (Australia) (3 pgs. spec.; 1 sht. drwgs.) | 111,910 | Nov. | 8, 1940 | 55-36 |

Claims 1 through 9 are rejected on Graham as failing to patentably distinguish therefrom. The expedient re-

versal of the relative positions of the elements 34 and 63 of Graham and the mere provision of a fastening means between the forward ends of said elements are considered matters of design well within the expected skill of the art and devoid of invention. Clearly no new or unexpected result is obtained by these expedient modifications within the scope of the combination.

Claims 1 through 9 are further rejected on Graham in view of Petersen and Drader. Petersen in the embodiment of elements 1 and 2, is relied upon to suggest the disposition of the Graham element 63 above the element 34. Drader, in the embodiment of the fastening means through elements E and D, is relied upon to suggest the use of fastening means in the forward ends of the Graham elements 34 and 63. In view of the teachings of Petersen and Drader, neither of the above changes in the Graham device are deemed to constitute invention.

Claims 10, 11 and 12 are rejected on Graham, for the same reasons advanced in the rejection of claims 1 through 9, in view of Pfeifer. To utilize the plate member 7 of Pfeifer on the Graham I-beam upper flange and connect said plate member to the Graham element 57 by means of the Pfeifer bolt means 10-11 is deemed to be well within the expected skill of the art and devoid of invention.

Claims 10, 11 and 12 are further rejected on Graham in view of Petersen and Drader, for the same reasons advanced in the rejection of claims 1 through 9 taken with Pfeifer. Pfeifer is relied upon for the same reasons set forth in the previous rejection of claims 10, 11 and 12.

Upon allowance of any claim revision as to form may be required. Rule 105.

All the claims are rejected.

/s/ O. L. Lewis
Acting Examiner

RFL:les

IN THE UNITED STATES PATENT OFFICE
—AMENDMENT—

(Mail Division Jul 2, 1952 U.S. Patent Office)

(U. S. Patent Office Jul 7, 1952 Division 1)

Div. 1

Inventor: William T. Graham
Invention: "CLAMP FOR VIBRATING SHANK PLOW"

Filed: August 27, 1951
Serial No. 243,893

Kansas City, Missouri

June 30, 1952

Hon. Commissioner of Patents
Washington 25, D. C.

Sir:

In response to Office Action of April 23, 1952, the above entitled application is hereby amended as follows:

Cancel the claims and substitute the following:

1. In a plow having a frame and a ground working tool provided with a shank adapted to rock relatively to the frame when the plow is in operation in a forward direction, a mounting for pivotally attaching and supporting the shank of the ground working tool to a transverse member of the frame, the mounting including a fixed member adapted to be fixed to the transverse member of the frame and having a longitudinally extending underface terminating forwardly of the transverse member to which said mounting is adapted to be fixed, the fixed member having ears extending rearwardly from said underface at the sides thereof, a shank attaching member having an elongated plate portion provided with an upper face corresponding with and normally in contact with said underface of the fixed member and provided with a longitudinally extending underface in engagement with a corresponding upper face of the shank whereby the plate portion of the shank

attaching member is between the shank and the fixed member, means connecting the elongated plate portion with the shank for maintaining the upper face of the shank in constant continuous contact with the underface of said plate portion of the shank attaching fixed member, a transverse pin pivotally connecting the shank attaching member to the fixed member at the rear ends of said normally contacting faces and whereon the shank attaching member pivots upon rocking movement of the shank, a coil spring having one end seated on the forward end of the fixed member, and means having connection with the forward end of the shank and with the other end of the coil spring whereby the spring yieldably maintains said normal contact of the upper face of the plate portion of the shank attaching member with the underface of the fixed member to maintain the normal plowing depth of the ground working tool.

2. In a plow having a frame and a ground working tool provided with a shank adapted to rock relatively to the frame when the plow is in operation in a forward direction, a mounting for pivotally attaching and supporting the shank of the ground working tool to a transverse member of the frame, the mounting including a fixed member adapted to be fixed to the transverse member of the frame and having a longitudinally extending underface terminating forwardly of the transverse member to which said mounting is adapted to be fixed, the fixed member having ears extending rearwardly from said underface at the sides thereof, a shank attaching member having an elongated plate portion provided with an upper face corresponding with and normally in contact with said underface of the fixed member and provided with a longitudinally extending underface in engagement with a corresponding upper face of the shank whereby the plate portion of the shank attaching member is between the shank and the fixed member, said shank attaching member having a lug extending upwardly between said ears of the fixed member and disposed at the rear end of the plate portion and above the plane of the underface of the fixed member, said shank attaching member having depending means embracing the shank at the rear end of said plate portion, a bolt connecting the forward end of the plate portion with

the forward end of the shank and cooperating with the shank embracing means in maintaining the upper face of the shank in constant continuous contact with the underface of said plate portion, a pivot pin extending transversely through said lug and carried by the ears with the axis thereof above the plane of the underface of the fixed member whereby the normally contacting face of the shank attaching member immediately moves out of contact with and away from the face of the fixed member when the shank attaching member pivots upon rocking movement of the shank, a coil spring having one end seated on the forward end of the fixed member, and means having connection with the forward end of the shank and with the other end of the coil spring whereby the spring yieldably maintains said normal contact of the upper face of the plate portion of the shank attaching member with the underface of the fixed member.

REMARKS:

Applicant's counsel wishes to express appreciation of the courtesy of the Assistant Examiner for kindly granting interviews in connection with this application on June 10 and 12, and also for the interview which the Primary Examiner granted on the latter date.

At the first of the interviews the Examiner's rejection of the claims on applicant's patent was discussed. It was pointed out that the present construction is an improvement over the structure disclosed in applicant's patent. The patented structure has proved a highly commercial success and has made this type of plow satisfactory for substantially all plowing conditions. It was found, however, that wear occurred between the shank and the fixed part of the clamp where the fulcrum shifted from the pin to that portion of the fixed part of the clamp directly at the rear end of the clamping face thereof. It was pointed out that the present construction avoided this wear by inserting the movable part between the plowing shank and the fixed part and by locating the pivot to avoid rubbing contact of the pivoted part with the fixed part of the clamp. With this arrangement the vibratory movement of the

shank acted on the pivoted part or shank attaching member of the clamp. This shifting of the wear point to the pivoted part facilitates repair and replacement when wear does occur.

In applicant's patent where the wear is on the fixed part it requires replacement of the fixed part, which part is substantially larger and therefore is far more expensive to replace than the smaller pivoted part. The fixed part is also more difficult to replace because the beam of the frame to which the plow shanks are attached must be removed to take off a worn fixed part of the clamp and replace it with a new part.

In the present structure, it is only necessary to remove the pivot pin and disconnect the pivoted part from the shank. These operations are accomplished without disturbing any of the other shank mountings which do not need to be replaced.

After this feature was pointed out to the Examiner he stated that his ground for rejection on applicant's patent set out in the first paragraph of the Office Action would be withdrawn. However, the Examiner believed that the Danish patent to Petersen disclosed the idea of mounting the pivoted part of a clamp between the shank and the fixed part. It was then pointed out that the pivot and intercontacting parts have a different relationship than the pivot and contacting faces of applicant's present clamp. The mounting of the Danish patent, as well as the contact points between the fixed and pivoted parts, have a different relationship with respect to the plow frame and to the portion of the plow shanks.

An Official Patent Office translation of the Danish patent indicates a different kind of plow. The members 1 are described as hoe teeth and the teeth are mounted vertically so that they are adjustable in height by means of the screw bolts 6. The contact faces of the mounting parts and the end of the shank are therefore vertically transverse to the movement of the horse hoe on which the mountings are used. It was also pointed out that it was the point 17 which moved into contact with the clamp part 18 to form a stop. Consequently due to the location of the pivot 16 this point would rub against and wear the fixed part.

This is confirmed by the translation which states: "The part 2, which rotates on a bolt 16 passed through the lateral cheeks 8, *has a beak 17 at the front,* which by engaging on the part 18 of the front wall carried back of the machine frame 3 stops the movement of the part 2, when the latter is pressed back by the spring 9." Applicant's mounting has no beak. The contacting faces of applicant's device extend substantially the full length of the mounting and no one portion of one face contacts the other face before other portions come into contact. Consequently the stop faces are not even equivalent to a beak. In the Danish patent the bolt or pivot 16 is between the tooth 1 and the face carrying the beak 17.

The Petersen patent is a foreign reference and if the disclosure therein suggests any modification of applicant's patented structure then the disclosure in the Danish patent to Petersen must be used in its entirety and not reconstructed to negative applicant's present invention. With this in mind the use of the mounting disclosed in the Danish patent as taught by applicant's patent would result in a structure wherein the pivoted part might be between the shank and the fixed part, but the pivot bolt 16 and beak 17 would be present in the hypothetical structure and have the same relationship as disclosed in the Danish patent. The hypothetical structure would also have a single attaching means for the shank and this attaching means would have the same relationship to the pivot bolt 16 and beak 17 and part 18 as disclosed in the Danish patent. Certainly the shank would not be connected with the pivoted part at the respective ends of the intercontacting portions of the clamp parts.

The disclosure in the Australian patent to Traeger was also discussed and it was pointed out that the shank 2 would have rubbing contact with the eye 4 on the fixed part of the clamp and that it did not suggest mounting of the plate portion of the pivoted part of the clamp between the shank 2 and the part 1. The Examiner agreed that this patent did not disclose the present invention.

The present claims, which are two in number, have been substituted for the original claims to better bring out the present invention and distinguish from any hypothetical

structure resulting from modification of applicant's patented structure as taught by the Danish patent to Petersen.

At the interview on the 12th the present claims were discussed and it was pointed out that they patentably distinguish from the structure disclosed in applicant's patent as well as from any hypothetical structure that might result from the teaching disclosed in the Danish patent.

Claim 13 distinguishes from the references by defining a fixed member having a longitudinally extending underface terminating forwardly of the transverse member to which the mounting is adapted to be fixed and a shank attaching member having an elongated plate portion provided with an upper face corresponding with and normally in contact with said underface of the fixed member and provided with a longitudinally extending underface in engagement with the corresponding upper face of the shank. This is certainly not the case of the faces of the fixed and pivoted clamping members of applicant's patent and as above pointed out such relationship of the contact faces would not result from modification of applicant's patented structure in view of the disclosure of the Danish patent. The claim also distinguishes by bringing out means connecting the elongated plate portion with the shank for maintaining the upper face of the shank in constant continuous contact with the underface of the plate portion of the fixed member.

The claim further distinguishes from the hypothetical structure by specifying a transverse pin pivotally connecting the shank attaching member to the fixed member at the rear ends of said normally contacting faces.

Claim 14 more specifically distinguishes from the references by defining the fixed member as having ears extending rearwardly from the underface at the sides thereof and that the shank attaching member has a lug extending upwardly between the ears of the fixed member and disposed at the rear end of the plate portion and above the plane of the underface of the fixed member.

The claim further distinguishes by specifying that the shank attaching member has depending means embracing the shank at the rear end of the plate portion (which is

certainly not the case of the tooth embracing means of the Danish patent), and by specifying a bolt connecting the forward end of the plate portion with the forward end of the shank.

The Examiner cited the Drader et al. patent to show that there is no invention in using a fastening device and that such a fastening device might be applied at the forward end of the hypothetical mounting as constructed from applicant's patent in accordance with the disclosure of the Danish patent. It is believed that the Examiner concedes that this is an improper rejection because neither of the principal references suggest connection of the forward ends of the shanks with the forward end of the pivoted plate portion and particularly when such connection is used with an embracing means at the opposite end of the interengaging face portions of the respective mounting members.

The upper clamp member is not included in the present claims and, therefore, the Drader et al. patent is not applicable to the present claims.

It is understood that it is the Examiner's thought that in the absence of a closer reference the two claims submitted herewith are patentable.

Favorable action is respectfully solicited.

Respectfully submitted,

FISHBURN AND MULLENDORE
Attorneys
By: /s/ Paul E. Mullendore

PEM/hf

DEPARTMENT OF COMMERCE

United States Patent Office
WASHINGTON

(Mailed November 14, 1952, Pat. Div. 1.)

Address Only

The Commissioner of Patents
Washington 25, D.C.

Paper No. 5

All communications respecting this application should give the serial number, date of filing, and name of the applicant.

Please find below a communication from the EXAMINER in charge of this application.

/s/ John A. Marzall
Commissioner of Patents.

| | |
|---|---|
| Applicant: | William T. Graham |
| Ser. No. | 243,893 |
| Filed | Aug. 27, 1951 |
| For | CLAMP FOR VIBRATING SHANK PLOW |

Fishburn and Mullendore
1216-17 Commerce Trust Bldg.
Kansas City 6, Mo.

Responsive to amendment filed July 2, 1952.

No reference can be found in the specification to the nut 56" shown in the drawings.

Claim 13 is rejected as being inaccurate. The upper face of the shank is not disclosed as being "in constant continuous contact with the underface of said plate portion of the *fixed* member" as recited in lines 20-21. Should not "fixed" be changed to—shank attaching—?

Claim 14 appears allowable.

Claim 13 would appear to be allowable if amended as suggested above.

/s/ A. Joseph Goldberg
Examiner

RFL
Lip: wm

(Mail Division November 18, 1952, United States Patent Office.)

(United States Patent Office November 18, 1952,

Division 1.)

IN THE UNITED STATES PATENT OFFICE

—AMENDMENT—

Div. 1

Inventor: William T. Graham

Invention: "CLAMP FOR VIBRATING SHANK PLOW"

Filed: August 27, 1951
Serial No. 243,893

November 18, 1952

Hon. Commissioner of Patents
Washington 25, D. C.

Sir:

In response to Office action of November 14, 1952, the above entitled application is hereby amended as follows:

Page 6, after the sentence ending in line 14, insert—The nut 56' is backed by a jam nut 56" to prevent turning thereof after the nut 56' has been set.—

Claim 13, line 21, cancel "fixed" and insert—shank attaching—.

REMARKS

The specification has been amended to include an explanation for the nut 56" that is shown in the drawings.

Claim 13 has been amended as suggested by the Examiner.

It is understood that with the above corrections the case is in condition for formal allowance of Claims 13 and 14.

Respectfully submitted,

FISHBURN & MULLENDORE
Attorneys
By /s/ Paul E. Mullendore

Lippitt:wm

Ser. No. 243,893
Paper No. 37

REFERENCES CITED

The following references are of record in the patented file of this patent: 2833

UNITED STATES PATENTS

| Name | Number | Date |
|---|---|---|
| Drader et al | 417,775 | Dec. 24, 1889 |
| Pfeifer | 2,014,451 | Sept. 17, 1935 |
| Graham | 2,493,811 | Jan. 10, 1950 |

FOREIGN PATENTS

| Country | Number | Date |
|---|---|---|
| Denmark | 57,391 | Mar. 18, 1940 |
| Australia | 111,910 | Nov. 8, 1940 |

OTHER REFERENCES

DEPARTMENT OF COMMERCE
United States Patent Office
Washington
(Mailed Dec. 3, 1952, Pat. Div. 1)

Address Only
The Commissioner of Patents
Washington 25, D. C.

All communications respecting this application should give the serial number, date of filming, and name of the applicant.

Fishburn and Mullendore
1216-17 Commerce Trust Building
Kansas City 6, Mo.

## NOTICE OF ALLOWANCE

The application for patent identified below has been examined and found allowable for issuance of Letters Patent.

Applicant William T. Graham

Title of Invention or Improvement CLAMP FOR VIBRATING SHANK PLOW

| Serial No. | Filing Date | Number Claims Allowed |
|---|---|---|
| 243,893 | Aug. 27, 1951 | 2 |

With the allowance of the application the final fee becomes due. This fee is thirty dollars ($30) plus one dollar ($1) for each claim allowed in excess of twenty (20) and must be paid within 6 months from the date of this notice. Failure to remit the final fee will result in the patent being withheld from issue. In remitting this fee identify the application to which it applies by giving the following information: Name of inventor, title of invention, serial number, date of filing, date of allowance, and if assigned, the names of the assignees. The final fee will not be received from anyone other than the applicant, his assignee or attorney, or a party in interest as shown by the records of the Patent Office.

If it is desired to have the patent issued to an assignee or assignees, an assignment, together with the fee for recording the same, must be filed in this Office on or before the date of payment of the final fee.

The patent will be issued and forwarded approximately five weeks after receipt of the final fee.

By direction of the Commissioner.

A. J. Goldberg
Examiner

FISHBURN, MULLENDORE & GOLD
*Successors to*
ARTHUR C. BROWN
Patent, Trademark & Copyright Causes
Suite 1217 Commerce Trust Building
Kansas City 6, Mo.
(Mail Division January 6, 1953, United States Patent Office.)

Claude A. Fishburn
Paul E. Mullendore
Orville O. Gold

Telephone VIctor 1588

January 5, 1953

Hon. Commissioner of Patents
Washington 25, D. C.

Sir:

Enclosed herewith find our check No. 3881 to cover, among other items, the final government fee of $30.00 in the application of William T. Graham for patent on "Clamp for Vibrating Shank Plow", Serial No. 243,893, filed August 27, 1951, and allowed December 3, 1952.

Acknowledgment of receipt is respectfully requested.

Respectfully submitted,

Fishburn and Mullendore
Attorneys
By: /s/ Claude A. Fishburn

CAF/st

AO Form 120 (Rev. Oct. 1954)

699

8

In Re Patents

# United States District Court

for the

(N. Dist. Texas)

SOLICITOR

SEP 28 1959

U. S. PATENT OFFICE

COMMISSIONER OF PATENTS,
Washington 25, D. C.

SIR:

In compliance with the Act of July 19, 1952 (66 Stat. 814; 35 USC 290), you are advised that there was filed on the 24th day of September, 19 59, in this court an action, No. 12538, entitled:

Name William T. Graham & Graham Plow, Inc., Plaintiff,

Address Amarillo, Texas

*versus*

Name John Deere Company of Kansas City, Defendant,

Address Kansas City, Missouri

brought upon the following patents:

| | PATENT NO. | DATE OF PATENT | PATENTEE |
|---|---|---|---|
| 1 | 2,627,798 | Feb. 10, 1953 | William T. Graham |
| 2 | | | |
| 3 | | | |
| 4 | | | |
| 5 | | | |

In the above-entitled case, on the day of , 19 , the following patents have been included by (insert amendment, answer, cross bill, or other pleading):

| | PATENT NO. | DATE OF PATENT | PATENTEE |
|---|---|---|---|
| 1 | | | |
| 2 | | | |
| 3 | | | |
| 4 | | | |
| 5 | | | |

In the above-entitled case the following decision has been rendered or judgment issued:

J. C. TIDMAN
Clerk.

Date September 25, 1959

By Virgil B. Cook
Deputy Clerk.

701

# INDEX OF CLAIMS

| DATE | | DATE | |
|---|---|---|---|
| 1 | | 61 | |
| 2 | | 62 | |
| 3 | | 63 | |
| 4 | | 64 | |
| 5 | | 65 | |
| 6 | | 66 | |
| 7 | | 67 | |
| 8 | | 68 | |
| 9 | | 69 | |
| 10 | | 70 | |
| 11 | | 71 | |
| 12 | | 72 | |
| a 13 | 1 | 73 | |
| 14 | 2 | 74 | |
| 15 | | 75 | |
| 16 | | 76 | |
| 17 | | 77 | |
| 18 | | 78 | |
| 19 | | 79 | |
| 20 | | 80 | |
| 21 | | 81 | |
| 22 | | 82 | |
| 23 | | 83 | |
| 24 | | 84 | |
| 25 | | 85 | |
| 26 | | 86 | |
| 27 | | 87 | |
| 28 | | 88 | |
| 29 | | 89 | |
| 30 | | 90 | |
| 31 | | 91 | |
| 32 | | 92 | |
| 33 | | 93 | |
| 34 | | 94 | |
| 35 | | 95 | |
| 36 | | 96 | |
| 37 | | 97 | |
| 38 | | 98 | |
| 39 | | 99 | |
| 40 | | 100 | |
| 41 | | 101 | |
| 42 | | 102 | |
| 43 | | 103 | |
| 44 | | 104 | |
| 45 | | 105 | |
| 46 | | 106 | |
| 47 | | 107 | |
| 48 | | 108 | |
| 49 | | 109 | |
| 50 | | 110 | |
| 51 | | 111 | |
| 52 | | 112 | |
| 53 | | 113 | |
| 54 | | 114 | |
| 55 | | 115 | |
| 56 | | 116 | |
| 57 | | 117 | |
| 58 | | 118 | |
| 59 | | 119 | |
| 60 | | 120 | |

## SEARCHED

| Class | Sub | Date | Ex'r |
|---|---|---|---|
| 97 | 184 | 3-31-52 | Lip. |
| | 183 | | |
| 55 | 36 | | |
| | 97 | | |

Division of App., No. ....., filed .....

| SYMBOLS | STATUS |
|---|---|
| / | Rejected |
| = | Allowed |
| – (Through numeral) | Canceled |
| + | Division requirement |
| N | Nonelected invention or species |
| I | Interference |
| A | Appeal |

46

243893

703

WM.

# CONTENTS

1. Application ..... papers.
2. Print Sept 6 1951
3. Rejection APR 23 1952
4. [illegible] Jan 22, 1952
5. Rejection NOV 14 1952
6. [illegible] Nov. 18, 1952
7. List of References
8. Notice of Suit SEP 24 1959
9.
10.
11.
12.
13.
14.
15.
16.
17.
18.
19.
20.
21.
22.
23.
24.
25.
26.
27.
28.
29.
30.
31.
32.
33.
34.
35.
36.
37.
38.
39.
40.
41.
42.
43.
44.
45.
46.
47.
48.
49.
50.

16—11378-7 U. S. GOVERNMENT PRINTING OFFICE

243893

45

U. S. PATENT OFFICE
SEP 10 1951
DIVISION 1

47

PAPERS ASSIGNED
MICROFILMED
SEP 7 1951

DEFENDANTS' EXHIBIT 5

PATENTS CITED BY PATENT OFFICE

707

(No Model.)

J. DRADER & A. B. McKAY.

CULTIVATOR TOOTH.

No. 417,775. Patented Dec. 24, 1889.

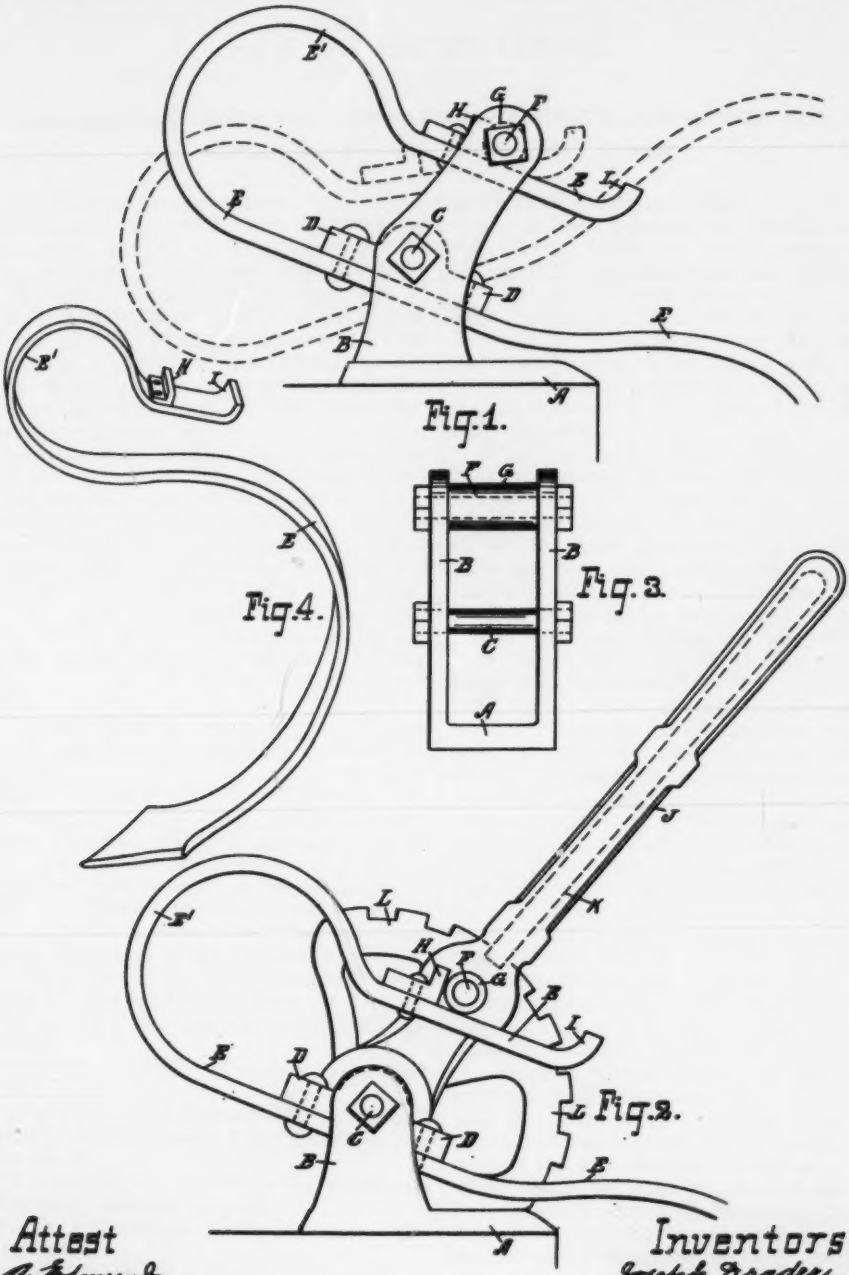


Attest
A. Edmunds
Carl Hayden

Inventors
Joseph Drader
Andrew B. McKay
By P. J. Edmunds
Atty

# UNITED STATES PATENT OFFICE

709

JOSEPH DRADER AND ANDREW B. McKAY, OF LONDON, ONTARIO, CANADA; SAID McKAY ASSIGNOR TO SAID DRADER.

## CULTIVATOR-TOOTH.

SPECIFICATION forming part of Letters Patent No. 417,775, dated December 24, 1889.

Application filed May 15, 1889. Serial No. 310,831. (No model.)

*To all whom it may concern:*

Be it known that we, JOSEPH DRADER and ANDREW B. McKAY, both subjects of the Queen of Great Britain, and both residents of the city of London, in the Province of Ontario, Canada, have jointly invented certain new and useful Improvements on Cultivator-Teeth, of which the following specification, taken in connection with the accompanying drawings, forms a full, clear, and exact description.

This invention consists of a cultivator-tooth pivotally secured to the frame of the implement, the upper returned end of which tooth engages with a pin or stud for the purpose of holding the tooth in the ground, and at the same time permit the tooth to raise and free itself automatically from a root, stone, or other unyielding obstruction, and then automatically return the tooth to its original position after it frees itself from said obstruction, as will be hereinafter first fully set forth and described, and then pointed out in the claims, reference being had to the accompanying drawings, already referred to, wherein—

Figure 1 is a side elevation of a device embodying our invention. Fig. 2 shows a modification of same. Fig. 3 is an end view of Fig. 1 with the tooth removed. Fig. 4 is a perspective view of one form of a cultivator-tooth. In this view the stop is also shown.

A designates a plate, which is rigidly secured to the frame of the implement.

B B are standards rigidly secured to or formed integral with the plate A.

C is a pivot stud or pin secured in the bearings B B.

D is a clip pivotally secured to said stud or pin C.

E is a spring-tooth formed with a returned portion E′, and this tooth E is rigidly secured to the clip D.

F is a stud or pin secured in the standards B B or other suitable support.

G is an anti-friction roller encircling the stud or pin F.

H is a stop rigidly secured to the tooth E, or it may be in the form of a shoulder integral with the tooth E.

I is a curved shoulder at the extreme upper end of the tooth, which prevents the stud or pin F from disengaging from the returned end of said tooth, and which, with the stop H, limits the movement of said tooth.

In the modification shown in Fig. 2, J designates a lever pivoted on the stud or pin C; K, a spring-actuated dog pivoted on the lever J and adjusted to engage with recesses or notches in the segment L, the latter being rigidly secured to the plate A or other suitable support.

When the returned end of the spring-tooth E is compressed and held by the stud or pin F, the latter is adjusted to one side of the pivot stud or pin C and toward the rear of the tooth, as shown in Fig. 1. When in this position, the compression of the returned part E′ of the tooth on the stud or pin F not only holds the stop H against said stud or pin F or the anti-friction roller G thereon, but also firmly holds the lower end of the tooth E in the ground for the purpose of cultivating the same; and when the point of the tooth E comes in contact with an unyielding obstruction—such as a root or stone—the greatly-increased pressure of this unyielding obstruction on the point of the tooth overcomes the pressure of the returned end of the tooth on the stud or pin F and permits the point of the tooth to rise automatically to free itself from the obstruction, and, the stud or pin F being adjusted eccentrically in relation to the curved returned end E′ of the tooth E and toward the rear of the tooth, as the point of the tooth is raised the returned end of the tooth, extending beyond the stud or pin F toward the rear of the tooth, is inclined upward, and as the point of the tooth is further raised to pass over the unyielding obstruction, the returned portion of the tooth, between the pivot stud or pin C and the stud or pin F, is slightly lowered in the direction of the arc of a circle of which the pivot stud or pin C is the center; but, the outer end of the returned part of the tooth being held by the eccentrically-arranged stud or pin F from moving in the same direction, the upwardly-inclined returned end of the tooth is moved under the stud or pin F toward the front of the tooth, but the stud or pin F is prevented from disengaging therefrom by

the shoulder I. This compresses the returned end of the tooth and the rear part of the tooth between the point and the pivot stud or pin C together. This moves the stop II away from the stud or pin F and greatly increases the compression of the returned end of the tooth on the stud or pin F, so that when the tooth frees itself from the obstruction this increased compression of the returned end of the tooth on the stud or pin F is sufficient to immediately project the tooth in the ground again to its normal working position, which is regulated by the stop II abutting against the stud or pin F or anti-friction roller G thereon, and the effect of this strain on the point of the tooth when coming in contact with and passing over an unyielding obstruction will not injuriously affect the tooth, from the fact that from this construction this strain will be expended to a great extent by the yielding or springing of the tooth between its point and the pivot stud or pin C and between the latter and the stud or pin F.

Our invention illustrated in Fig. 1 is intended to be secured to the frame of the implement, and when required to move this implement along the road or from one field to another it will be necessary to raise the frame of the implement in order to adjust the teeth secured thereto clear above the ground; but when it is not convenient to raise the frame of the implement we rigidly secure the stud or pin F to a lever J, (shown in Fig. 2,) and, as before described, provide this stud or pin F with an anti-friction roller G, which engages with the stop H on the returned end of the tooth E, as also before described, and we pivot this lever J on the stud or pin C and secure a recessed or notched segment L to the plate A or other suitable support, and on the lever J we pivot the spring-actuated dog K and adjust it to engage with the notches or recesses in the segment L, so that when using this form of construction, by grasping and operating the lever J, the operator is enabled to raise the tooth E clear above the ground or to any required position in the ground, according to the direction and distance said lever is operated, and when the lever J and tooth E are adjusted to the required position they are securely held at that point by engaging the spring-actuated dog K with notches or recesses in the segment L.

By adjusting and holding the lever J at a lower point on the segment L the point of the tooth not only enters the ground a greater distance, but the returned end E′ of the tooth is further compressed by the stud or pin F, and the rigidity of the tooth in the ground is increased, because the pressure of the returned end E′ of the tooth on the stud or pin F is increased. This would be necessary in cultivating hard or stiff ground. The same result would be attained by adjusting the pin F lower in its bearings, or by adjusting said pin in its bearings to a point toward the rear of the tooth.

Having thus described our invention, what we claim as new, and desire to secure by Letters Patent, is—

1. A pivotal cultivator-tooth E, having returned end E′, stop H, and a stud or pin C, in combination with the stud or pin F, provided with an anti-friction roller G, and said studs or pins supported in suitable bearings, substantially as shown and described, and for the purpose set forth.

2. A pivotal cultivator-tooth E, having a returned end E′, stop H, pivot stud or pin C, and bearings B, in combination with the stud or pin F, anti-friction roller G, and lever J, and means for holding said lever at the position to which it is adjusted, substantially as shown and described, and for the purpose set forth.

In testimony whereof we affix our signatures in the presence of the two undersigned witnesses.

JOSEPH DRADER.
ANDREW B. McKAY.

Witnesses:
P. J. EDMUNDS,
A. EDMUNDS.

711

Sept. 17, 1935. W. PFEIFER, JR 2,014,451

FASTENING DEVICE

Filed March 30, 1933

Fig. 1.

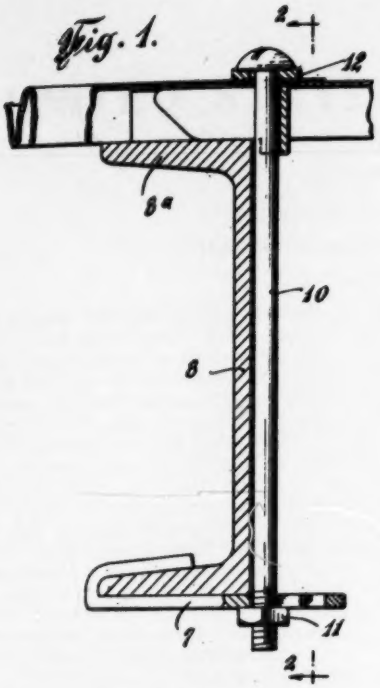


Fig. 2.

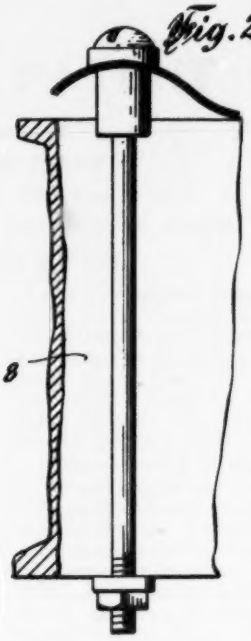

Fig. 6.

Fig. 5.

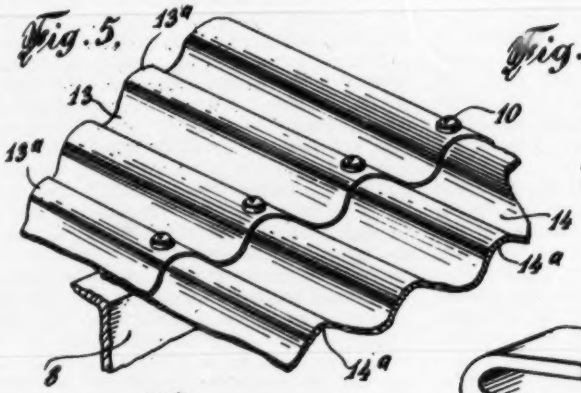


Fig. 3.

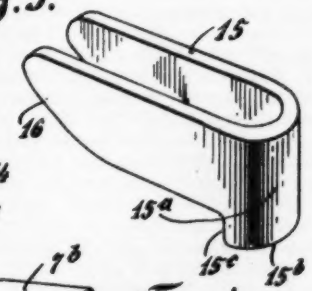


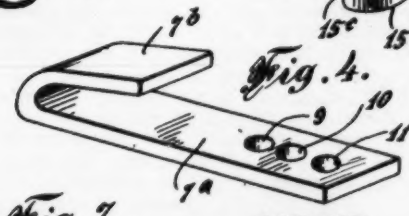


Fig. 4.

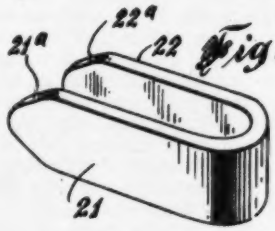


Fig. 8.

Fig. 7.

INVENTOR
WILLIAM PFEIFER, JR.,
BY
ATTORNEY

Patented Sept. 17, 1935 2,014,451

713

# UNITED STATES PATENT OFFICE

2,014,451

## FASTENING DEVICE

William Pfeifer, Jr., Hackensack, N. J.

Application March 30, 1933, Serial No. 663,448

3 Claims. (Cl. 189—35)

The present invention relates generally to fastening devices and is more particularly directed to means for anchoring or securing corrugated or other metal sheeting to elements of a supporting frame, in various forms of construction work.

While my invention, as hereinafter will become manifest, possesses a wide range of utility in the erection of sheet metal structures of many types in different fields, for the purposes of this disclosure I have elected to describe it, more or less specifically, as it may be practiced in the assembly of sheets of corrugated metal upon rigid supporting members for the formation of a metal roof for a building or the like. It will be understood, however, that this is merely illustrative and is not to be construed, in any sense, as limiting my invention to this particular application.

As is well known, in constructing a building roof of corrugated metal sheeting, it is the standard practice to overlap the sheets inwardly of their edges and anchor the overlapped portions to the purlins or other supporting members of the roof framework. Numerous means for anchoring or fastening the sheets upon the framework have been proposed, none of which, however, has proven entirely satisfactory in meeting the demand for low production and installation costs combined with efficient performance of the intended function thereof. For example, in some instances, the fastening devices are of a special design and their use is consequently limited to certain kinds of work, while in others the devices are such as to measurably increase the labor outlay in the erection of a roof in which they are employed. In those forms of prior devices which are most generally utilized, a rivetting operation is necessary in securing the sheets to the purlins and in the performance of this operation it frequently happens that the ridges of the corrugations upon which the rivets are to be upset are indented to an appreciable degree, or the metal ruptured or broken about the rivet holes. This, obviously, not only endangers the security of the jointure of the sheeting with the purlins but makes it impossible to produce a watertight roof. The same is true, to a considerable extent, where bolts are utilized in the assembly of the anchoring devices, it being evident that, unless the amount of tension exerted upon the sheet metal in the application of the securing nut to the bolt is carefully controlled, with the concomitant increase in labor costs, the relatively thin material of the sheeting will be susceptible to damage.

From the foregoing, it will be evident that none of the devices now available for securing corrugated metal sheeting to rigid supporting members responds to the demand for low production and installation costs with efficiency in the performance of the work to which they are to be applied and, therefore, it is the general object of this invention to provide a means and method of fastening sheets of corrugated metal to their supporting elements which will meet this demand in a most simple and practical manner.

More specifically, it is the object of this invention to provide a device for fastening sheets of corrugated metal to cooperating supporting members whereby the erection of a structure in which they are employed will not only be expedited, but a secure and water-tight jointure of the sheets will be effected simultaneously with their connection to the supporting members.

It is a further object of my invention to provide a means for fastening corrugated sheets to relatively rigid supporting members, having the aforesaid characteristics and advantages, wherein the possibility of deformation or rupture of the ridges of the sheeting in the application of the fastening devices will be entirely eliminated, in a simple and practical manner, thus obviating the waste in labor and material which frequently results from the necessity of disassembling and discarding sheeting that may have been rendered non-serviceable by careless or inexpert performance of the jointure and anchoring operation.

Another object of my invention is to provide a means for anchoring metal sheeting to suitable supports, in different forms of construction work wherein the jointure between the sheets is rendered water-tight or leak-proof co-incidentally with the interlocking of the sheets and the supports, my means comprising an assembly of cooperating elements for simultaneously effecting a leak-proof jointure of the sheets and their positive connection to their supports in a single installation operation.

Other objects and advantages flowing from the practicing of my invention will become evident as the description proceeds and I would have it clearly understood that I reserve unto myself all rights to the full range of equivalents, both in structure and in use, to which I may be entitled under my invention in its broadest aspect.

A preferred embodiment of my invention which is particularly responsive to the requirements of roof construction is illustrated in the accompanying drawing, in which

Figure 1 is a view in elevation, partly in section, showing my fastening device as it functions in

anchoring corrugated metal sheets to a supporting member.

Figure 2 is a view in elevation, looking toward the web of the channel member, taken on the line 2—2 of Figure 1.

Figure 3 is a perspective of an element of the fastening device assembly, which functions as a support for the ridge of the sheeting, in the use of my invention.

Figure 4 is a view in perspective of the sheet-support engaging component of my device.

Figure 5 is also a view in perspective, showing fragments of overlapped sheets of corrugated metal interlocked with their supporting member by the use of my invention.

Figure 6 is a view similar to Figure 2, showing a slightly modified form of the invention.

Figure 7 is an elevation of the aperture sealing element of my assembly, and

Figure 8 is a perspective view of a modification of the ridge supporting element shown in Figure 3.

Referring now to the drawing, in detail, in which like characters of reference are employed to designate similar parts in the several views, and more particularly to the form of the invention illustrated in Figures 1 to 5, inclusive, 7 indicates a bracket or plate adapted for interlocking engagement with the sheet-supporting member of the roof or other construction, which, in the present showing, is a purlin of the conventional channel cross section, as shown at 8. This bracket, as will be observed, is of the so-called hook type, the body $7^a$ and co-operating nose $7^b$, respectively, conforming to the contour of the outer and inner faces of the purlin flange with which it is associated as and for the purposes hereinafter described.

It will be noted that the aforesaid bracket is provided with a plurality of alined apertures 9, 10 and 11 through a pre-selected one of which the threaded end of the bolt 10, which may be of the screw-head type, is adapted to be passed to receive the securing nut 11, the assembled fastening device also including a preferably annular washer or gasket 12, preferably of lead or other soft metal or of any other material that will resist corrosion and cooperate with the bolt head in the functioning of my device in attaining the objectives to which the invention is directed.

In utilizing my fastening means, the corrugated sheets, 13 and 14, are overlapped upon the purlin 8, in accordance with the usual practice, the sheets being provided with a series of registering apertures alined along their mated edges, through which the bolts of the several fastening devices are adapted to be passed, so that the shanks thereof will parallel the web of the purlin, substantially as shown in Figure 1 of the drawing. The aforesaid openings for the reception of the bolts may be formed in the sheets prior to their location upon the purlins or after their edges have been overlapped, either by drilling or punching, or, if desired, the end of the shank of the bolt may be tapered so that the bolt may be driven therethrough to provide the necessary apertures in the mated sheets, it being obvious, of course, that a washer 12 is applied to each bolt before it is entered in the apertures of the sheets with which it is to cooperate.

In order that the sheeting along the ridges $13^a$—$14^a$, in which the bolts are seated may not become distorted or the metal surrounding the bolt holes therein may not be broken or ruptured in the operation of anchoring the sheets to the purlins, I employ a shoulder or abutment 15 which is preferably formed from relatively flat stock in a U-shape, the lower edges of the arms being chamfered at their ends as at 16. The spacing of the arms of the U is slightly greater than the diameter of the bolts 10, so that, at an appropriate stage in the application of my fastening device, this shoulder or abutment may be inserted between the top flange of the purlin and the sheeting, with its upper edges in contact with the inner surface of the ridge of the under sheet, with which, of course, the complemental ridge of the outer sheet is in registration. As will be obvious, when the shoulder or abutment is in position, the bolt shank, adjacent the sheeting is straddled by the parallel arms thereof, the curved surface $15^a$ connecting the arms being preferably extended below the plane of the lower edges thereof, as at $15^b$, to form a stop $15^c$ which will abut against the web of the purlin when the shoulder is in its proper functioning position, it being apparent that by the provision of this stop, the alinement of the shoulder or support 15 with the longitudinal axis of the ridge within which it is to be located in the placement of the shoulder is facilitated.

Following the location of the bolt within the sheeting apertures and the positioning of the abutment or shoulder 15, between the upper flange of the purlin and the sheeting, as just described, or at any other convenient stage in the sheet-anchoring operation, the lower end of the bolt shank is entered in the appropriate aperture of the bracket 7, depending upon the transverse measurements of the lower flange of the purlin, to position the bolt parallel to its web. The securing nut 11 is then applied to the bolt and turned up to draw the sheeting and the cooperating shoulder or abutment 15 into close association with the upper flange $8^a$ of the purlin, it being manifest, of course, that the bracket is engaged with the purlin flange as it is designed to function in the employment of my invention. The pressure exerted upon the washer or gasket 12 by the head of the bolt, as a result of the turning up of the nut upon the bolt, tends to compress and spread the metal of the washer or gasket so that it not only effectively seals the sheeting apertures through which the bolt shank passes but functions as a medium for interlocking the surfaces of the two relatively harder metals between which it is interposed, thereby materially increasing the efficiency of my anchoring device in resisting forces detrimental to the constant maintenance of the jointure, as vibration and the normal expansion and contraction of the metals, due to climatic or other conditions.

In the form of the invention illustrated in Figures 6 and 7, in lieu of the bolt 10 and the bracket 7, I employ a bolt 17, the end of the shank of which has a hook formation to embrace the lower flange of the purlin similarly to the bracket 7, the threaded portion of the bolt, in this embodiment of my invention, extending through the alined apertures of the overlapped sheets to receive a cap or acorn nut 18, in threaded engagement therewith, a washer or gasket of a softer material than the cap nut being interposed between the latter and the outer surface of the sheeting. This washer may be similar to that shown in Figures 1, 2 and 5 or it may be of a special design as illustrated in Figure 7, in which it will be noted that both faces in the zone of its central aperture are formed with substantially semi-spherical bosses 19 and 20, these bosses operating with the head of the bore of the cap nut

18 and the registered apertures of the sheets to provide a positive and water-tight jointure of the locking device and the sheets.

In Figure 8 there is illustrated a slightly modified form of abutment for interposition between a purlin and the ridges of the sheeting through which the fastening bolts are to be passed, from which it will be noted, the stop 18e is omitted and the ends of the arms 21 and 22 are of an approximately wedge-shape formation, as indicated at 21a and 22a.

While I have described my invention more or less specifically with relation to the preferred embodiment and modified forms thereof illustrated herein, it will be evident that the elements of my fastening device may vary in design, within certain limits, to meet various construction conditions, without departing from the spirit and scope of my invention, as defined by the appended claims; also that, as heretofore pointed out, the simplicity and ease of application of my fastening device; as well as the cooperation of the several elements thereof, enables me to attain the objectives to which my invention is directed, not only in the formation of a sheeting metal roof, but in all of those forms of construction work wherein it is desirable or necessary to anchor corrugated metal sheeting to a relatively rigid supporting frame in a manner which will assure a positive and water-tight jointure of the sheeting.

I claim:

1. A device for fastening corrugated metal sheeting to a channel member of a supporting framework, comprising a bolt, a bracket conformed to engage the inner and outer surfaces of the lower flange of said channel member and projecting beyond the web thereof, the projecting portion of said bracket being provided with a plurality of apertures, through a pre-selected one of which said bolt is adapted to extend, means in threaded engagement with the protruding end of said bolt and co-acting with said bracket to anchor said sheets to said support and a U-shaped fitting embodying a portion to abut upon the web of said member adapted to be inserted between said sheeting and said channel member and embracing said bolt, to support the sheeting for perforation for the reception of said bolt and to resist distortion of the sheeting in response to the functioning of the aforesaid anchoring means.

2. A device for supporting the hill section of a piece of corrugated metal sheeting from a flat surface of a structural element upon which the dale sections on either side thereof are superposed, for resisting distortion of the crest of said hill in its perforation for the reception of an anchoring bolt and in the functioning of the anchoring media, comprising a U-shaped member having its parallel sides provided with wedge shaped entering ends merging into flat top and bottom edges, adapted respectively to support the under part of the hill section of the sheeting and abut upon the flat supporting surface of said element, when said member is disposed within said hill, the base of said member connecting its aforesaid lower parallel sides being extended therebelow to form a shoulder, the face of which is adapted to abut against part of said structural element, disposed at a right angle to that with which said lower edges contact, whereby said shoulder will function as a stop and to center the longitudinal axis of said member on the longitudinal axis of said hill within which said member is located.

3. A means for fastening corrugated metal sheeting to a flanged member of a supporting framework, comprising a bolt, a bracket having one end conformed to engage the inner and outer faces of the flange of such member, the other end thereof extending beyond the web of said member and being provided with bolt-receiving apertures, a U-shaped fitting, embodying a portion formed to abut upon the web of said member, adapted to straddle said bolt with its parallel surfaces in bearing contact respectively with the flange of said member and the opposed sheeting, a seal for the bolt orifice in the sheeting formed of compressible material and having a raised central zone apertured to embrace said bolt in juxtaposition to its head, and means for threaded engagement with said bolt to coact with said bracket in anchoring said sheeting to said support, the raised central portion of said seal being deformable into close association with the underside of the bolt head, to provide an hermetic jointure between the sheeting and the anchoring device.

WILLIAM PFEIFER, Jr.

717

Jan. 10, 1950 W. T. GRAHAM 2,493,811

VIBRATING PLOW AND MOUNTING THEREFOR

Filed Feb. 26, 1947 3 Sheets-Sheet 1

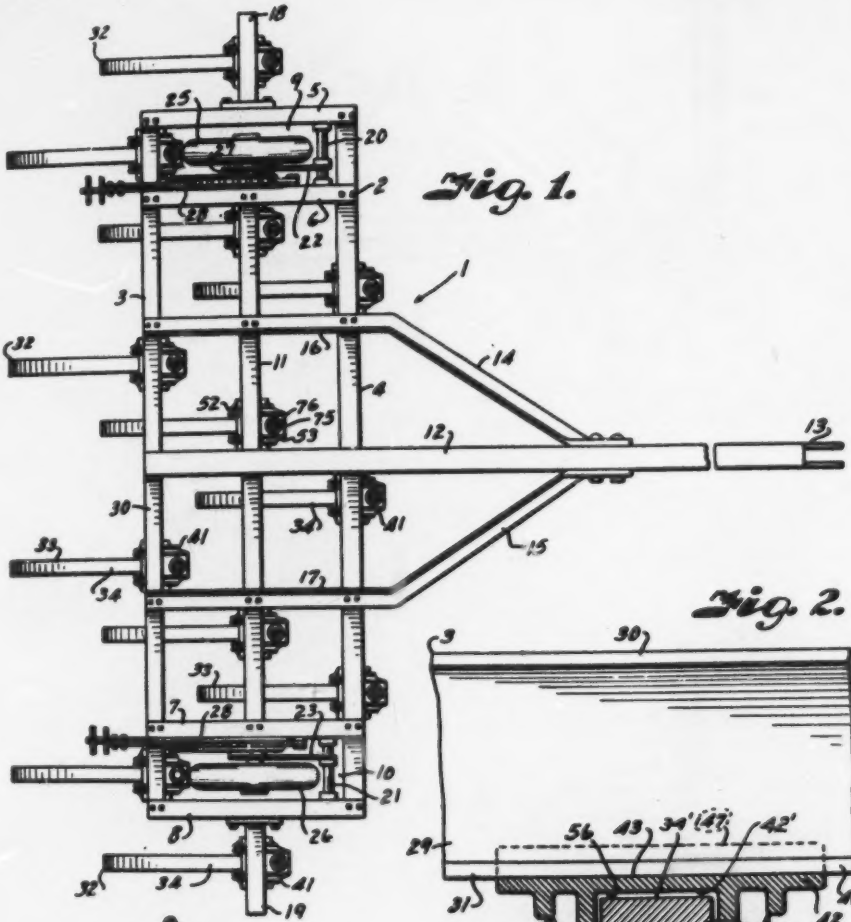

Fig. 1.

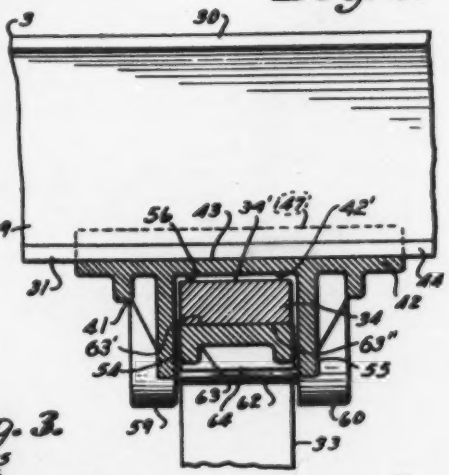

Fig. 2.

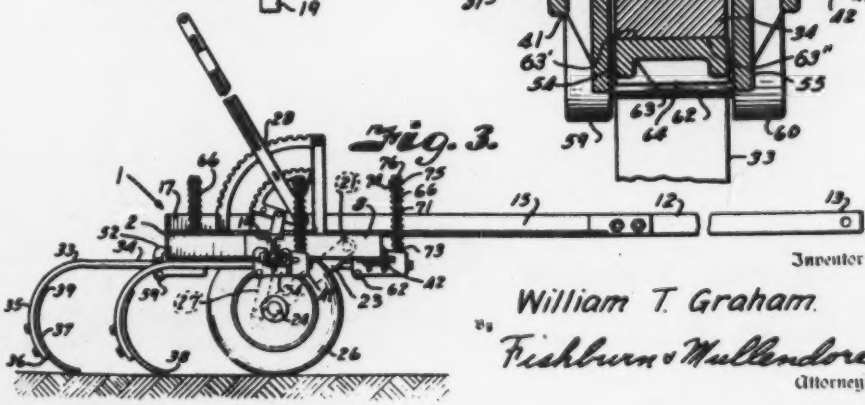

Fig. 3.

Inventor

William T. Graham.

By Fishburn & Mullendore

Attorneys

719

Jan. 10, 1950 W. T. GRAHAM 2,493,811

VIBRATING PLOW AND MOUNTING THEREFOR

Filed Feb. 26, 1947 3 Sheets-Sheet 2

Fig. 4.

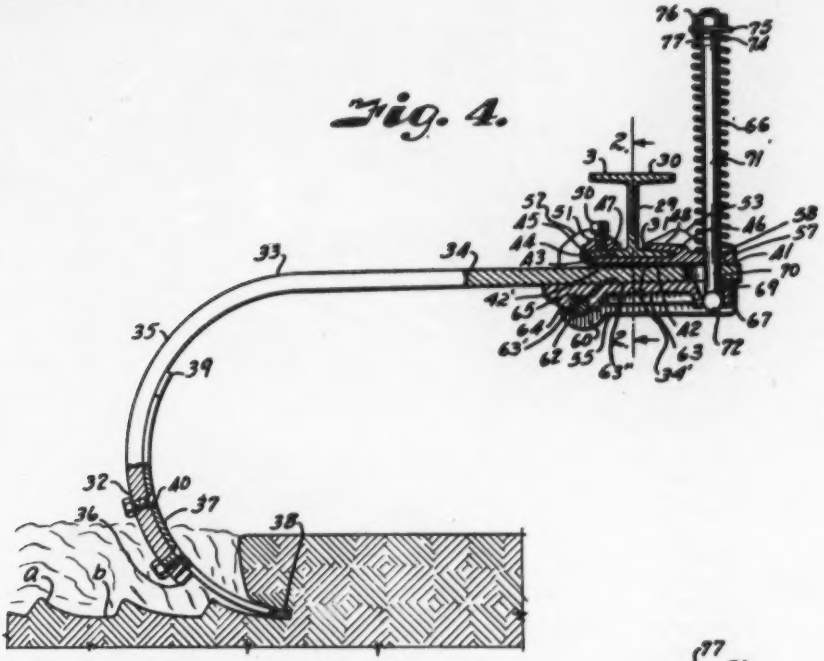


Fig. 5.

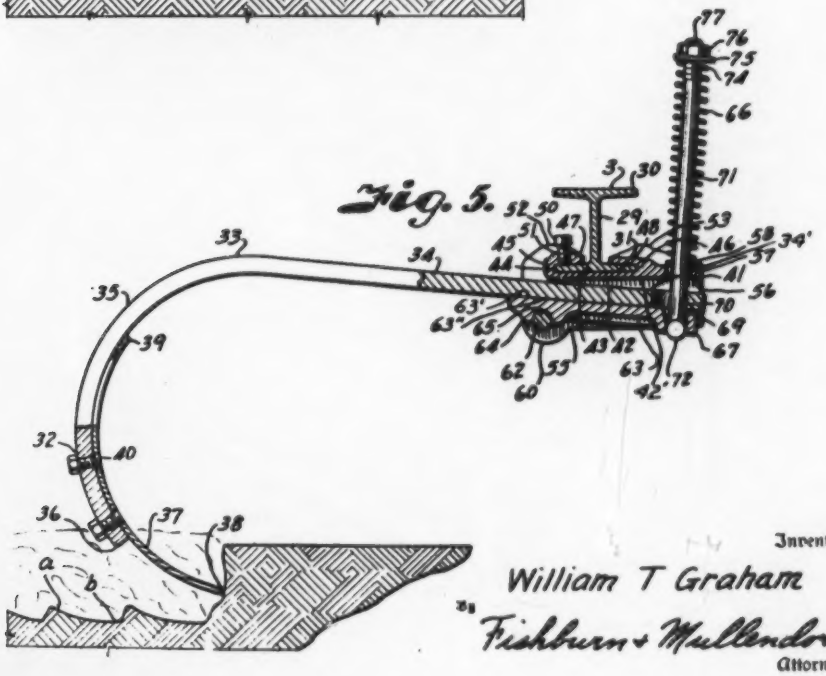


Inventor

William T Graham

By Fishburn & Mullendore.

Attorneys

721

Jan. 10, 1950 W. T. GRAHAM 2,493,811

VIBRATING PLOW AND MOUNTING THEREFOR

Filed Feb. 26, 1947 3 Sheets-Sheet 3

Fig. 6.

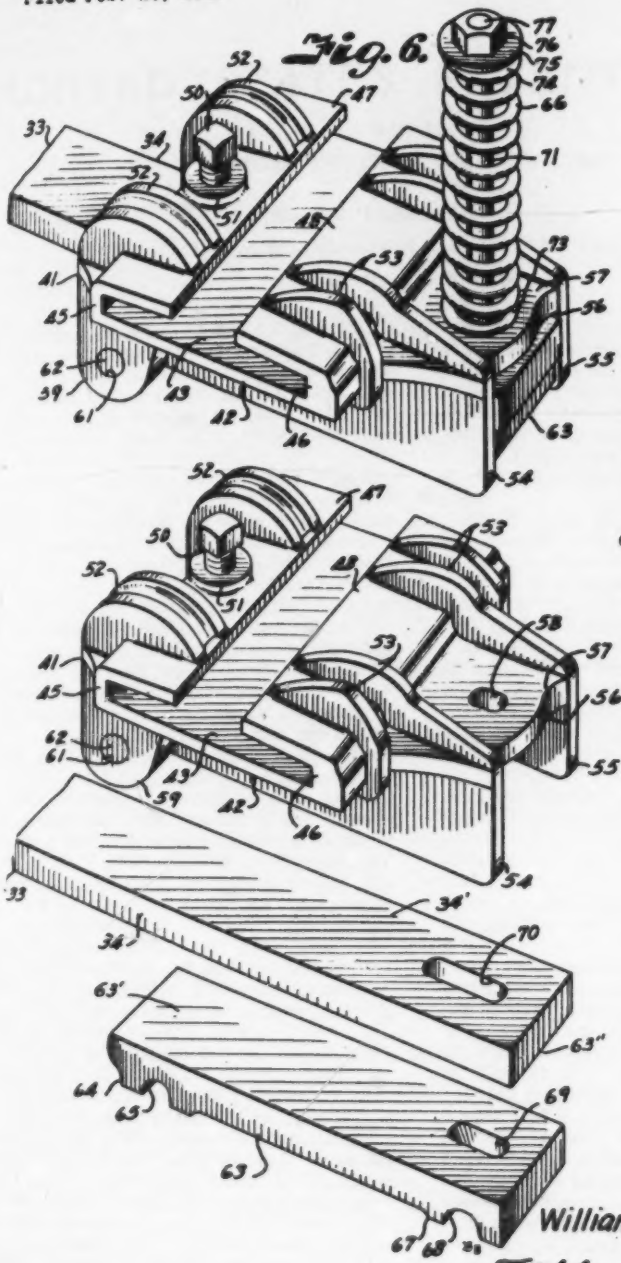


Fig. 7.

Inventor

William T. Graham.

Fishburn & Mullendore.

Attorneys

Patented Jan. 10, 1950

2,493,811

723

# UNITED STATES PATENT OFFICE

2,493,811

## VIBRATING PLOW AND MOUNTING THEREFOR

William T. Graham, Amarillo, Tex.

Application February 26, 1947, Serial No. 730,991

8 Claims. (Cl. 97—184)

1

This invention relates to plows of a type which includes a plurality of laterally arranged ground conditioning tools that work under the surface to heave and break the soil and form alternate ridges and furrows having exposed surfaces composed of clods, straw and other natural mulching material normally occurring on a field.

Plows of this character have proved most desirable because the ground prepared therewith is in condition for optimum moisture conservation and it is substantially free from erosion by water and wind. Also, the top soil does not dry out and form a hard crust since it is protected from the wind and sun by the mulching material with the result that better crop yields are obtained.

I have discovered that such plows can be made more effective by providing a pronounced pumping or vibratory action of the ground working tools. This action works the fine soils toward the bottom for forming the seed bed and the coarse materials to the top for forming a better mulch and moisture collecting surface. The pumping action also produces alternating pockets and ridges transversely of the bottoms of the furrows for collecting and storing small pools of moisture from which moisture is supplied to the loose soil of the seed bed by capillary action during dry periods. I have also determined that the pumping action of the tools results in an easier pulling plow and that less motive power is required.

Therefore, it is a principal object of the present invention to provide a plow of this character with tool mountings that result in maximum pumping action of the ground working tools.

Other objects of the invention are to provide a tool mounting that includes a sliding support on a fulcrum member for attaching the tools pivotally on the plow frame; to provide resilient means acting on one side of the fulcrum for retaining the tools in the ground and for producing the resiliency that results in pumping action of the tools; to provide means for selectively varying the pumping action in accordance with the hardness of the ground being worked; to provide a mounting for the ground working tools that reduces breaking and bending of the plow parts when operating in hard and rocky soils; to provide a resilient tool mounting that cooperates with the inherent resiliency of the shank of the ground working devices which results in a chiseling or gouging action of the ground working tools for forming the ridges and pockets in the bottoms of the furrows; and to provide a plow structure and tool mounting that is simple and reliable in operation.

In accomplishing these and other objects of the invention I have provided improved structure,

2

the preferred form of which is illustrated in the accompanying drawing wherein;

Fig. 1 is a plan view of a plow constructed in accordance with the present invention.

Fig. 2 is an enlarged section through one of the tool mountings on the line 2—2 of Fig. 4.

Fig. 3 is a side elevational view of the plow showing the ground working tools in raised position.

Fig. 4 is an enlarged section through one of the ground working tools and its mounting and showing the tool in ground working position.

Fig. 5 is a similar view showing action of the tool to produce the chisel cuts or gouges in the bottom of the furrows.

Fig. 6 is a perspective view of one of the tool mounting units removed from the carrying frame and showing the end portion of the tool shank.

Fig. 7 is a perspective view of the parts of the unit arranged in spaced relative positions.

Referring more in detail to the drawings:

1 designates a plow constructed in accordance with the present invention and which includes a frame 2 composed of transverse beams 3 and 4 spaced apart at the ends thereof by pairs of longitudinal members 5—6 and 7—8 and which provide wheel pockets 9 and 10. The frame also includes an intermediate transverse beam 11 connecting the innermost longitudinal members 6 and 7.

Extending across the mid portions of the beams and suitably connected thereto is a tongue 12 having its forward end 13 arranged for connection to the draftbar of a tractor (not shown). The tongue 12 is suitably braced relative to the frame by bars 14 and 15 having rear ends 16 and 17 extending parallel with the longitudinal members 6 and 7 of the frame and which are secured to the transverse beams 3, 4 and 11. Extending from the end members 5 and 8 in aligning registry with the intermediate beam 11 are beam extensions 18 and 19.

Mounted at the forward end of the wheel pockets 9 and 10 and carried between the pairs of longitudinal members 5 and 6 and 7 and 8 are shafts 20 and 21 carrying arms 22 and 23 having wheel spindles 24 on their lower ends for journalling ground wheels 25 and 26.

The frame 2 is adapted to be raised and lowered with respect to the wheels 25 and 26 by connecting the free ends of the arms 22 and 23, through links 27, with lever mechanisms 28 whereby the ground working devices hereinafter described may be moved into and out of ground working position.

The ground working devices are carried by the

transverse beams 3, 4 and 11 at spaced intervals along the lengths thereof and in staggered relation to form a plurality of spaced furrows when the plow is in use. The transverse beams of the plow frame are preferably of H-shaped cross section and arranged with the webs 29 in vertical position with the upper and lower flanges 30 and 31 extending horizontally.

The ground working devices 32 each include a shank or stem 33 of substantially rectangular cross section and of a width and thickness to provide a certain amount of resiliency. The stem or shank includes a substantially straight portion 34 adapted to extend in the direction of travel of the machine and a rearwardly and downwardly curved portion 35 which terminates in a forwardly curving end 36 for mounting ground working tools or blades 37. The tools 37 are correspondingly curved to seat within the curvature of the shanks and have sharpened ends 38 and 39 so that they may be reversed. The ground working tools are secured to the shanks by fastening devices such as plow bolts 40. The ground working tools when mounted are firmly supported within the curvature of the shanks and one of the pointed ends extends forwardly in position to work underground and cause the soil to heave and break and form a furrow.

In order to accomplish the objects of the present invention the ground working devices 32 are carried upon the beams by novel mountings arranged to give the tools the above described vibratory or pumping action. The mountings are of identical construction and each includes a bracket including a clamp member or part 41 having a plate portion 42 provided with a flat face 43 corresponding to the width of the lower flange 31 of the beams 3, 4 and 11 and which is adapted to closely engage therewith. Projecting laterally from the front and rear sides of the plate portion 42 and extending across the edges 44 of the lower flanges 31 are web portions 45 and 46 carrying inwardly extending flanges 47 and 48 that engage over the upper faces of the lower beam flanges 31.

The length of the plate portion 42 is such as to provide an ample contact area with the flanges 31 so as to assure a firm connection when the clamp is fastened to its beam by a set screw 50. The set screw 50 is threaded through a boss 51 formed on the upper face of the flange 47 so that the end thereof bears against the upper face of the flange to draw the plate portion 42 of the clamp tightly against the bottom face of the beam. The ends of the clamp member 41 are adequately ribbed as at 52 and 53 for reinforcing the beam contacting portions thereof.

Depending from the underside of each clamp member 41 are flanges 54 and 55 that are spaced apart to provide an open bottom channel or way 56 in which the end portions of the shanks of the ground working devices are anchored and adapted to pivot. The flanges 54 and 55 extend forwardly of the plate portion of the clamp member 41 on the respective sides of a forward extension 57 of the plate portion 42. The extension 57 has an elongated opening 58 extending substantially vertically therethrough with the longer axis arranged parallel with the flanges 54 and 55. Formed on the flanges 54 and 55 at the opposite ends thereof are depending ears 59 and 60 having transverse openings 61 in which are mounted the ends of a fulcrum or pivot pin 62 that extends across the way or channel 56, the pin 62 being carried in spaced relation with the plate portion 42 to accommodate therebetween the end portion of the shank 33 of a ground working device and a fulcrum plate or clamp part 63. The under side of the plate portion 42 between the flanges 54 and 55 forms a clamping portion or face 42' conforming with the upper face 34' of the end portion of the shank.

The fulcrum plate 63 having a clamping portion or face 63' is retained in contact with the lower face 63'' of the forward end portion of the tool supporting shank and has a transverse rib 64 formed on the underside that is provided with a groove 65 opening downwardly to accommodate the pivot or fulcrum pin 62 and on which the fulcrum plate 63 together with the overlying end portion of the shank 33 are adapted to pivot or hinge under action of a spring 66 as now to be described.

The opposite end of the fulcrum plate has a similar rib 67 provided with a transverse groove 68 intersecting an elongated opening 69 that registers with the opening 58 previously described and with an elongated opening 70 provided in the forward end of the shank 33. Extending through the openings is a T-bolt or rod member 71 having a T-shaped head 72 adapted to rock within the groove 68. The rod 71 extends upwardly through the slot-like openings 69, 70 and 58 and projects a substantial distance above the bracket extension 57 on which an end 73 of the spring 66 seats. The other end 74 of the spring engages a spring seat or washer 75 that is sleeved on the upper end of the rod and retained against the upper end of the spring by an adjusting nut 76 mounted on a threaded end 77 of the rod as best shown in Figs. 6 and 7. The spring 66 is thus retained in compression to keep the head 72 in rocking engagement with groove 68 of the gripping portion or face 63' of the fulcrum plate 63 and the fulcrum plate in contact with the lower face 63'' of the end portion of the shank 33 and the upper face 34' of the end portion of the shank 33 against the clamping portion 42' (as shown in Fig. 4). The ground working tools are thus resiliently supported between the clamping members or parts and are adapted to rock thereon as permitted by action of the springs to effect pumping action of the ground working tools incidental to drag of the tools through the ground and resiliency of the compression springs so as to produce the furrows and chisel cuts indicated at "a" and forming the pockets indicated "b" in Figs. 4 and 5 of the drawings.

In assembling the ground working devices 32 on the transverse beams 3, 4 and 11 of the plow frame 2, the clamp brackets 41 are slid onto the beams from the ends thereof when the frame 2 is being assembled. The brackets are spaced on their respective beams and in relation to the brackets of the other beams so as to equalize the draft on the respective sides of the tongue 12 and provide the desired spacing of the furrows. When the brackets 41 are in position they are rigidly anchored to the lower flanges 31 of the beams by tightening the set screws 50 which pull the brackets up against the bottom of the beam flanges. This clamping action of the brackets and contact of the brackets with the beam flanges rigidly anchor the brackets in position against forces applied thereto by the ground working devices 32 so that the ground working devices are retained in their fixed working positions.

In attaching the ground working devices the

fulcrum plates 63 are inserted between the flanges 54 and 56 of the brackets and the rear ends are moved onto the fulcrum pins 62. The forward ends of the shanks 33 of the ground working devices are then projected through the space or channel between the plate portions 43 of the brackets 42 and the fulcrum plates 63 so that the slotted openings 76 in the forward ends register with the openings 58 and 59. The rods or T-bolts 71 are then applied by projecting the shanks upwardly through the registering openings 59, 76 and 58 until the T-shaped heads 72 thereof seat within the grooves 68. The springs 66 are then sleeved over the upper ends of the rods 71 so that the lower ends 73 seat against the extensions 57 of the brackets 41. The spring seats 75 and nuts 78 are then applied to the threaded ends 77 of the rods and the nuts tightened to compress the springs in a sufficient amount to retain resiliently the ground working devices in ground working position, the degree of compression of the springs being regulated in accordance with the hardness of the ground to be plowed.

In using a plow equipped with ground working devices as above described, the tongue 12 of the plow is attached to the drafthar of a tractor to be drawn thereby over the field to be plowed. When the plow is in position to start the furrows, the lever mechanisms 28 are actuated to lower the plow frame 2 with respect to the wheels 26 and 26 which brings the ground working tools 39 into contact with the soil and forward pull on the plow forces the ground working tools 39 into the ground to a depth as set by the lever mechanisms 28. Pull on the plow frame in one direction and resistance to the pull offered by the ground working tools in the opposite direction causes the shanks 33 to slide on the fulcrum-plates 63 until the forward ends of the slotted openings 76 of the shanks move into stop engagement with the rods 71 to limit movement of the shanks relatively to the clamping portion of the members 53.

The fulcrum plates 63 are retained from shifting therewith by the pivot pins 62. Consequently, the relative positions of the heads 72 of the rods 71 are fixed but they rock within the grooves 68 of the fulcrum plates 63 until the rods 71 strike the rear ends of the elongated openings 58 of the mounting brackets 41. The springs normally urge the forward ends of the shanks 33 in contact with the bottom surfaces or clamping portions of the plate portions 43 of the brackets 41 and the fulcrum plates 63 with the gripping portions thereof against the under faces of the shanks to provide frictional resistance that cooperates with the springs 66 in anchoring the ground working devices to the plow frame.

As the plow moves forward the pointed ends 38 of the tools 37 work into the ground until the resistance is such as to cause rocking movement of the tool shanks 33 on the fulcrum pins 62 of the mounting brackets, with the forward ends moving the pivoted clamping members of the clamps away from the fixed or bracket members against action of the springs 66. During this action there is a slight longitudinal movement of the shanks on the fulcrum plates. When the soil breaks over the ground working tool, the spring is again effective to exert a lifting thrust on the forward ends of the shanks 33 which causes the tool carrying ends of the shanks to rock downwardly and produce downward and forward cut (a) in the soil until the resistance



is again sufficient to cause the upward movement against action of the spring 66, which movements produce a constant rocking or pumping action of the tools to form a continuous series of pockets (b) in which moisture is adapted to collect. As the tool passes the broken and upheaved soil falls to the side and settles back into the furrow to cover the pockets, however shallow furrows are left between upstanding ridges without turning over of the soil. The pumping action of the tools also works the fine soil downwardly to form the seed bed and the larger clods, straw and other natural mulching material are worked to the surface for covering the fine soil and for serving as a mulch to preserve the moisture which collects in the furrow and in the bottom pockets thereof. As the ground dries after a rain, the moisture collecting in the pockets moves upwardly by capillary action to supply the seed bed while the clods and other mulching material preserves the moisture and prevents crusting over of the soil. Also, since the pockets "b" trap the water, the water has sufficient time to penetrate into the ground instead of running off. The furrows trap the rainfall and prevent washing and soil erosion. The roughage and mulching material left on the ground also protects the soil from wind erosion.

From the foregoing it is obvious that I have provided a plow structure wherein the pumping action of the ground working tools enhance the desirable features of the plow and that the pumping and constant movement of the ground working tools produces an easier draft. It is also obvious that my improved mounting reduces or eliminates breakage of the ground working devices since they yield automatically under action of the springs when they strike immovable objects such as rocks or other obstructions.

What I claim and desire to secure by Letters Patent is:

1. In a plow having a frame and a ground working device provided with a shank adapted to be attached to said frame, means for attaching the shank to the frame which results in a pumping action of the ground working device when the plow is in use, including a bracket on the frame having a downwardly opening way extending in the fore and aft direction of the plow, a pin extending transversely across said way, a fulcrum plate pivotally mounted on the pin at one end and having its other end extending along said shank on the side of the pin opposite the ground working device, a rod having pivotal connection with the fulcrum member and extending through an elongated opening in said shank and through a registering opening of the bracket to anchor the shank to said bracket and provide sufficient longitudinal relative movement between the shank and fulcrum member to accommodate oscillation of the shank, and a spring having one end engaged with said rod and the other end engaged with the bracket for yieldingly permitting rocking movement of the fulcrum member for effecting said pumping action of the ground working device.

2. In a plow having a frame and a ground working device provided with a shank adapted to be attached to said frame, means for attaching the shank to the frame which results in a pumping action of the ground working device in the frame when the plow is in use, including a bracket on the frame having a downwardly opening way extending in the fore and aft direction of the plow, a pin extending transversely of said way, a ful-

crum plate pivotally mounted on the pin at one end and having its other end extending along said shank on the side of the pin opposite the ground working device, a rod having pivotal connection with the fulcrum member and extending through an elongated opening in said shank and through a registering opening of the bracket to anchor the shank to said bracket and provide sufficient longitudinal relative movement between the shank and fulcrum member to accommodate oscillation of the shank on the bracket, a spring sleeved on said rod and having one end seated on the bracket, and means on the rod engaging the other end of the spring to retain the fulcrum member in contact with said end of the shank and said end of the shank in contact with the bracket, said spring being yieldable to effect said pumping action of the ground working device.

3. In an apparatus of the character described, a plow frame including a transverse beam having a flange on its lower edge, a tool supporting shank extending across said lower flange, a bracket, means attaching the bracket to said flange, a fulcrum on the bracket, a fulcrum plate pivoted on the fulcrum and having a transverse groove intersected by an opening through said fulcrum plate and registering with elongated openings in the shank and bracket, a rod extending through said openings and having a T-shaped head engaged in said groove, a spring on the rod having one end bearing on the bracket, a washer on the rod engaging the other end of the spring, and a nut threaded on the rod and engaging the washer to compress said spring and retain the fulcrum plate in contact with the shank and the shank in contact with the bracket.

4. In an apparatus of the character described, a plow frame including a transverse beam having a flange on its lower edge, a bracket fixed to said flange and having depending laterally spaced flanges, a tool supporting shank extending forwardly between said flanges, a pin extending transversely between the flanges of the bracket at a point below the shank, a fulcrum plate pivoted on said pin and extending forwardly in supporting engagement with the shank, a rod pivotally connected with the fulcrum plate and extending through registering openings in said shank and bracket to anchor the shank for limited longitudinal movement on the fulcrum plate, a spring on the rod having one end bearing against the bracket, a washer on the rod engaging the other end of the spring, and a nut threaded on the rod and engaging the washer to compress said spring for retaining the tool in the ground and yielding in response to resistance on said tool when the plow is in operation to produce a pumping action of the tool in the soil.

5. In a plow having a frame and a ground working tool provided with a shank adapted to rock relatively to the frame when the plow is in operation in a forward direction, a mounting for attaching and supporting the shank of the ground working tool from the frame including a clamp fixedly attached to the frame, the clamp including a part that is fixed to the frame and another part pivotally mounted on the fixed part, the shank having an end portion thereof between said parts and in movable engagement with the said parts, a coil spring having one end thereof in engagement with one of said parts, means at the other end of the spring connected with the other of said parts to maintain the spring in position and for holding the said parts of the clamp with the end portion of the shank therebetween in their resiliently held-together association so that when the shank is rocked or moved the end portion of the shank between the parts will cause the movable part of the clamp to move away from the fixed part along with said end portion and back to normal position with the end portion of the shank contactingly held between the two parts, and means on one of the parts engageable with a part of the end portion of the shank to prevent disengagement of the shank from the clamp but to allow same to rock.

6. In a device as claimed in and by claim 5, wherein the fixed part of the clamp is of channel shape formation and the said end portion of the shank is disposed therein and prevented from moving laterally.

7. In a plow having a frame and a ground working tool provided with a shank adapted to rock relatively to the frame when the plow is in operation in a forward direction, a mounting for attaching and bodily supporting the shank from the frame to carry the ground working tool including a pair of shank clamping members having clamping portions conforming with upper and lower faces of the shank, means on one of the clamping members for rigidly fixing said clamping member to the frame with the clamping portion thereof extending in the direction of movement of the plow, a fulcrum hingedly connecting the other clamping member to the fixed clamping member at one end of the clamping portions with the shank therebetween and with the clamping portions normally in contact with the corresponding faces of the shank substantially along the length of the clamping portions, a rod member having a portion at one end in connecting engagement with one of the clamping members, a spring seat on the other end of the rod member and a spring having one end engaging the spring seat and the other end seating upon the other of the clamping members to cooperate with the fulcrum in normally retaining the clamping members with the clamping portions thereof in substantially complete contact with the corresponding faces of the shank and yieldable under rocking action of the shank to maintain the clamping portion of the hinged clamping member in contact with the shank as the shank rocks away from the clamping portion of the fixed clamping member, said shank having a part thereof in stop engagement with one of said members to limit movement of the shank relatively to the clamping portion of the hinged clamping member when the shank is under rocking movement.

8. In a device as claimed in and by claim 7 wherein the rigidly fixed clamping member is of channel shape formation and the shank is disposed therein and prevented from moving laterally.

WILLIAM T. GRAHAM.

REFERENCES CITED

The following references are of record in the file of this patent:

UNITED STATES PATENTS

| Number | Name | Date |
|---|---|---|
| 407,273 | Allstatter | July 16, 1889 |
| 2,125,512 | Martins | Aug. 2, 1938 |

FOREIGN PATENTS

| Number | Country | Date |
|---|---|---|
| 226,500 | Great Britain | June 11, 1926 |

Kl. 45 a - 51

727

DANMARK

PATENT Nr. 57391.

# BESKRIVELSE

MED TILHØRENDE TEGNING

OFFENTLIGGJORT DEN 18. MARTS 1940

AF

DIREKTORATET FOR PATENT- OG VAREMÆRKEVÆSENET.

Maskinfabrikant PETER VAGN PETERSEN,

UGGERLØSE BY OG SOGN, HOLBÆK AMT.

## Fjedrende Spændestykke til Radrensere.

Patent udstedt den 4. Marts 1940. Patenttiden løber fra den 2. Januar 1939.

Den foreliggende Opfindelse angaar et til en Radrensers Ramme fastspændt, fjedrende Spændestykke indrettet til Optagelse af de i Handelen gængse udelte Radrensertænder. Der kendes allerede Spændestykker af denne Art, der imidlertid lider af den Mangel, at Tænderne ikke er tilstrækkelig stabile over for Sidepaavirkninger. Denne Mangel er ifølge Opfindelsen afhjulpet ved, at den Tanden optagende og foroven af en i og for sig kendt indstillelig Skruefjeder paavirkede Del ikke alene med Sidevanger omslutter Tanden paa en betydelig Længde, saa at Tanden ikke kan rokke i sit Leje, men ogsaa selv paa en betydelig Strækning er styret af Sidevanger paa den til Maskinrammen fastspændte Del af Spændestykket og derfor ikke kan komme til at rokke til Siden i denne Del, under sit Drejning om en gennem de sidstnævnte Vanger ført Omdrejningsbolt.

En Udførelsesform for Opfindelsen er vist paa Tegningen, der viser det paagældende Spændestykke set fra Siden delvis i Snit.

Spændestykket bestaar af en til Optagelse af en udelt, med et ikke vist Skær forsynet Radrensertand *1* bestemt Del *2* og en til Fastspænding paa Maskinrammen *3* bestemt Del *4*. Delen *2* har et firkantet Hul *5* til Optagelse af den i Højden ved Hjælp af en Skruebolt *6* indstillelige Tand *1*, og denne er desuden styret over en længere Strækning af to fra Delen *2* bagudvendende Sidevanger *7*. Delen *4* har ligeledes to bagudvendende Sidevanger *8*, der paa en betydelig Strækning omfatter og styrer Delen *2*, som foroven paa kendt Maade er under Paavirkning af en kraftig Skruefjeder *9*, hvis Spænding kan reguleres ved Hjælp af en med Kontramøtrik *10* forsynet Skruebolt *11*. Delen *4* har i sin Forvæg og i sine Sidevanger *8* en Udskæring *12*, der omslutter Maskinrammen *3*, og den fastspændes til denne ved Hjælp af en Spændeplade *13* og Skruebolte *14* med Skruemøtrikker *15*.

Delen *2*, der er drejelig om en gennem Sidevangerne *8* ført Omdrejningsbolt *16*, har fortil et Næb *17*, der ved at tage paa den bag om Maskinrammen *3* førte Del *18* af Forvæggen standser Bevægelsen af Delen *2*, naar denne sidste trykkes bagud af Fjederen *9*.

### Patentkrav.

Fjedrende Spændestykke til Radrensere indrettet til Optagelse af de i Handelen gængse

udelte Radrensertænder, kendetegnet ved, at den Tanden optagende og foroven af en i og for sig kendt indstillelig Skruefjeder 9 paavirkede Del 2 ikke alene med Sidevanger 7 omslutter Tanden paa en betydelig Længde, saa at Tanden ikke kan rokke i sit Læje, men ogsaa selv paa en betydelig Strækning er styret af Sidevanger 8 paa den til Maskinrammen fastspændte Del 4 af Spændestykket og derfor ikke kan komme til at rokke til Siden i denne Del under sin Drejning om en gennem Vangerne 8 ført Omdrejningsbolt 16.

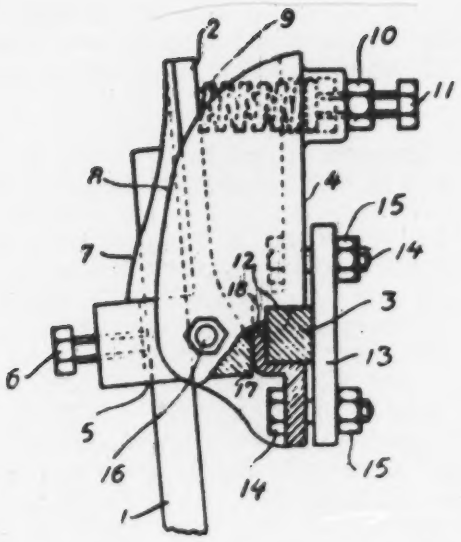


København 1948 A/S · [illegible]

PETERSEN 733
Patent No. 57,391

Translation of Danish Patent No. 57391, Class 45 a-51, to Peter Vagn Petersen; patent issued March 4, 1940; period of patent extends from January 2, 1939; published March 18, 1940. Resilient mounting piece for horseshoes.

The present invention concerns a resilient mounting piece, fixed to the frame of a horseshoe and arranged to receive the undivided hoe teeth current in the trade. Mounting pieces of this kind are already known, but suffer from the defect that the teeth are not sufficiently resistant to lateral stresses. This defect is remedied according to the invention by the fact that the part receiving the tooth and influenced above by an adjustable coil spring of known type not only encloses the tooth for a considerable length with lateral cheeks, so that the tooth cannot rock in its bearing, but is itself also guided over a considerable extent by lateral cheeks on the part of the mounting piece fixed to the machine frame and cannot therefore rock to the side in this part during its rotation on a bolt passed through the last-mentioned cheeks.

An embodiment of the invention is shown on the drawing, which shows the mounting piece concerned seen from the side, partly in section.

The mounting piece consists of a part 2, intended to receive an undivided tooth 1 of a horseshoe, provided with a share not shown, and a part 4, intended to be fixed to the machine frame 3. The part 2 has a quadrangular hole 5 to receive the tooth 1, adjustable in height by means of the screw bolt 6, and is, furthermore, guided over a considerable distance by two lateral cheeks 7 facing away from the part 2. The part 4 likewise has two backward-facing lateral cheeks 8, which over a considerable distance embrace and guide the part 2, which is under the influence above in known manner of a strong coil spring 9, whose tension can be regulated by means of a screw bolt 11, provided with a counternut 10. The part 4 has in its front wall and its lateral cheeks 8 a hollow space 12, which encloses the machine frame 3, and it is fixed thereto by means of a clamp plate 13, and screw bolts 14 and nuts 15.

The part 2, which rotates on a bolt 16 passed through the lateral cheeks 8, has a beak 17 at the front, which by engaging on the part 18 of the front wall carried back of the machine frame 3 stops the movement of the part 2, when the latter is pressed back by the spring 9.

## Patent Claim

Resilient mounting piece for horseshoes, arranged to receive the undivided hoe teeth current in the trade, characterized thereby, that the part 2 receiving the tooth and influenced above by an adjustable coil spring of known type 9 not only encloses the tooth for a considerable length with lateral cheeks 7, so that the tooth cannot rock in its bearing, but is itself also guided over a considerable extent by lateral cheeks 8 on the part 4 of the mounting piece fixed to the machine frame and cannot therefore rock to the side in this part during its rotation on a bolt 16 passed through the cheeks 8.

735

111,910

Application Date : 12th Jan., 1940. No. 127/40.

Department of Patents
Patents Act 1903-1921
Commonwealth of
Australia.

*Applicant (Actual Inventor)* .. .. ERNEST ALBERT TRAEGER.
*Application and Provisional Specification* Accepted, 13th February, 1940.
*Complete Specification after Provisional Specification* Lodged, 18th September, 1940.
*Complete Specification* .. .. .. Accepted, 8th November, 1940.
*Acceptance Advertised (Sec. 50)* .. 21st November, 1940.

**Classes 39.3; 39.9.**

*Drawing attached.*

LIBRARY
FEB 13 1941
U. S. PATENT OFFICE

## COMPLETE SPECIFICATION.

# "An improved spring tyne for agricultural implements."

I, ERNEST ALBERT TRAEGER, of 116 King William Road, Hyde Park, State of South Australia, Commonwealth of Australia, Salesman, British Subject, hereby declare this invention, and the manner in which it is to be performed, to be fully described and ascertained in and by the following statement:

This invention relates to an improved spring tyne for agricultural implements, and in particular it relates to spring tynes of the "S" type which are commonly used in drills and combines.

The tyne constructed as heretofore usually comprises a main S-shaped member of spring steel the upper end of which is secured to the frame or float of the implement and the lower end of which is adapted to take a share or other tilling tool and, in the case of a drill or combine, to also support the boot into which the seed and or fertilizer is fed.

The upper part of the tyne is usually reinforced by an internal, and sometimes also by an external, spring steel member of complementary shape to the upper part of the tyne, which member strengthens the tyne at such part and is commonly known as a "helper".

In tynes so constructed however a weakness appears to exist at or about the centre of the tyne, for whenever a tyne breaks such breakage usually occurs at this point.

It is the object of my invention to provide a tyne which is so constructed that breakage is minimised or eliminated, beside having other advantages.

According to my invention the tyne is constructed of general form as heretofore but, instead of being made with a continuous main member, the main member is made in two overlapping parts joined together by means of a hinge which will allow the rear part to swing upwardly against the influence of a spring, or springs, arranged between the two parts and which spring normally holds the rear part in working position, the downward movement of the rear part beyond working position being prevented by contact with the forward part.

In order that the construction of my invention and the manner of its operation





7066. 5 12 40.—140.—Price, 1s. 6d. post free.

737

111,910

may be the more clearly understood I will now describe the preferred form of same with reference to the accompanying drawings in which:—

Fig. 1 is a side view.

Fig. 2 is a cross section on line 2—2 of Fig. 1, and

Fig. 3 is a central longitudinal section, showing also in dotted lines the rear part in a raised position relatively to the front part.

In the drawings the main member is shown as comprising two parts 1 and 2 joined together by a hinge pin 3 which allows the rear part 2 to swing upwardly when it strikes a serious obstruction.

In order to carry this hinge pin 3 the rear end of the forward part 1 is turned over to form an eye 4, and the rear part 2 has secured to it by a rivet 6, or by welding or other means, a U-shaped bracket or clip 5 with perforations in its upwardly extending members, the hinge pin 3 passing through the eye 4 of the forward part and through the perforations in the upwardly extending members of the clip 5 of the rear part.

Normally the rear part 2 is held in working position relatively to the forward part 1 by means of a spring device and a stop.

The stop is formed by the forwardly extended end 8 of the rear part 2 which extends forward past the hinge pin 3 and contacts with the underside of the forward part 1 of the tyne and prevents further upward movement of same, but permits upward movement of the rear part of the tyne.

The spring device comprises two springs 10 in compression which encircle two rods 11, preferably curved as shown. These rods have in their lower ends eyes which fit upon a pin or bolt 12, which passes through an eye at the front end of the extension 8, and pass thence through perforations in a cross plate 13 secured upon the top face of the helper 15 (or it may be secured upon the top face of the main member 1 if the helper is shortened) and have upon their upper ends nuts 16 and cone shaped washers 17 which engage the upper ends of the springs 10 the lower ends of which rest upon the cross plate 13. The metal around the perforations in the cross plate 13 is pressed upward to form shallow cone-shaped projections. The purpose of the cone-shaped washers 17 and the cone-shaped projections upon the cross plate 13 is to centre the ends of the springs 10 about the rods 11. The nuts 16 upon the rods permit the pressure of the springs to be adjusted as desired.



It will be appreciated that although I have described in detail one embodiment of my invention, other embodiments may be readily devised.

A tyne constructed according to my invention will operate similarly to the tynes previously constructed, that is to say the tyne may act as an ordinary spring tyne, flexing along the upper curved portion of the "S" and also along the lower curved portion heretofore. When however a stone or other obstruction is encountered requiring an unusual amount of movement the main flexing need not be taken by the upper or the lower curved portions of the "S" but can be taken by the upward swinging of the lower part 2 of the tyne about the pivot 3 with consequent compression of the springs 10. So soon as the obstruction has been passed the springs cause the two parts of the tyne to return to normal relative position.

Having now fully described and ascertained my said invention and the manner in which it is to be performed I declare that what I claim is:—

1. A spring tyne for agricultural implements comprising two parts hinged together to permit the rear part to swing upwardly relatively to the forward part and provided with a spring to normally hold the two parts in fixed relationship one to the other.

2. A spring tyne for agricultural implements having its main member made in two parts joined together by means of a hinge which will allow the rear part to swing upwardly against the influence of a spring, or springs, carried by the forward part and which spring normally holds the rear part in working position, the downward movement of the rear part beyond working position being prevented by contact with the forward part.

3. A spring tyne for agricultural implements having its main member made in two overlapping parts joined together by means of a hinge which will allow the rear part to swing upwardly against the influence of a spring, or springs, carried by the forward part and which spring normally holds the

739
111,910

rear part in working position, the downward movement of the rear part beyond working position being prevented by contact of the forward end of the rear part with the underside of the rear end of the forward part.

4. A spring tyne as claimed in either of the preceding claims characterised in that the front end of the rear part of the tyne projects forwardly beyond the hinge and contacts with the underside of the forward part and has hingedly attached to it the lower ends of two rods which pass upwardly through two perforations in a cross plate secured upon the forward part of the tyne and have upon their upper ends nuts or other stop devices which engage the upper ends of two springs which encircle the two rods and are confined between the said nuts and the said cross plate.

5. The improved spring tyne for agricultural implements constructed and operating substantially as described and illustrated.

Dated this 16th day of September, 1940.

ERNEST ALBERT TRAGGER.

By his Patent Attorneys,

COLLISON & Co.

Fellows Institute of Patent Attorneys of Australia.

Witness A. R. Donnell.

5 6

Printed and Published for the DEPARTMENT OF EXTERNAL COMMONWEALTH OF AUSTRALIA, by L. F. JOHNSTON, Commonwealth Government Printer, Canberra.

741

111,910

FIG. 1

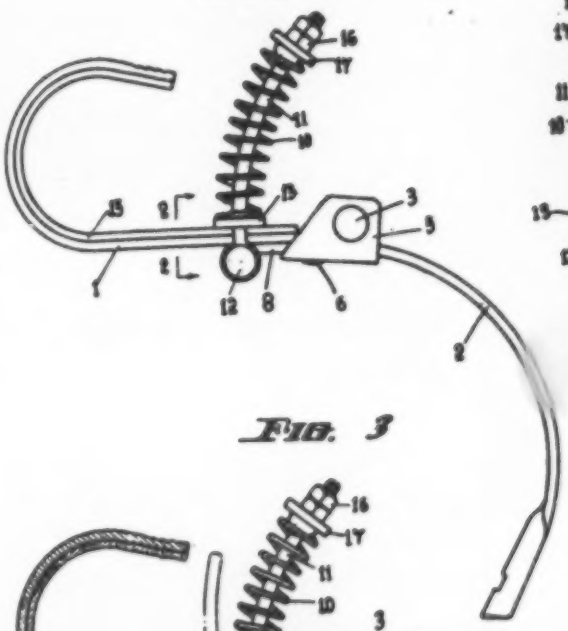


FIG. 2

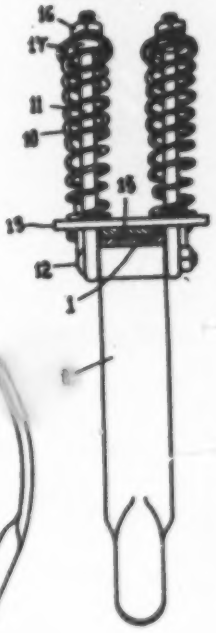


FIG. 3

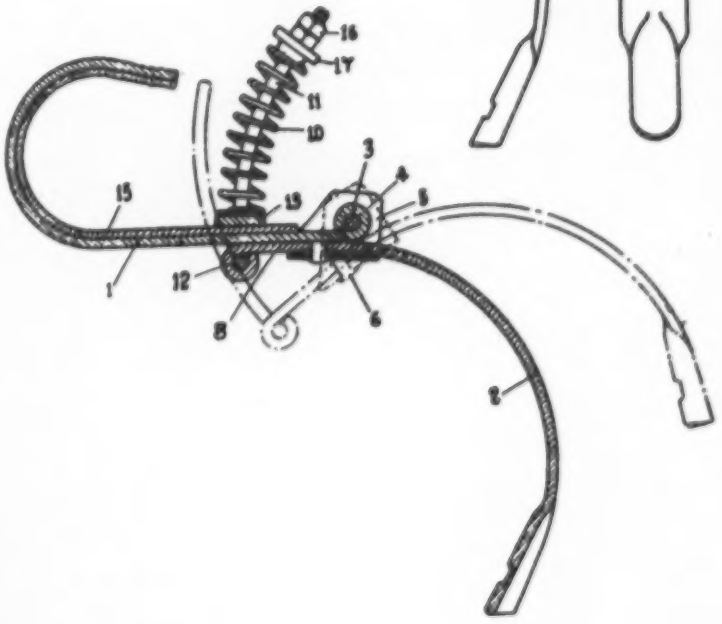

ADDITIONAL PATENTS CITED IN DEFENDANT'S ANSWER

745

# E. M. DUNBAR.

## Harrow.

No. 211,003. Patented Dec. 17, 1878.

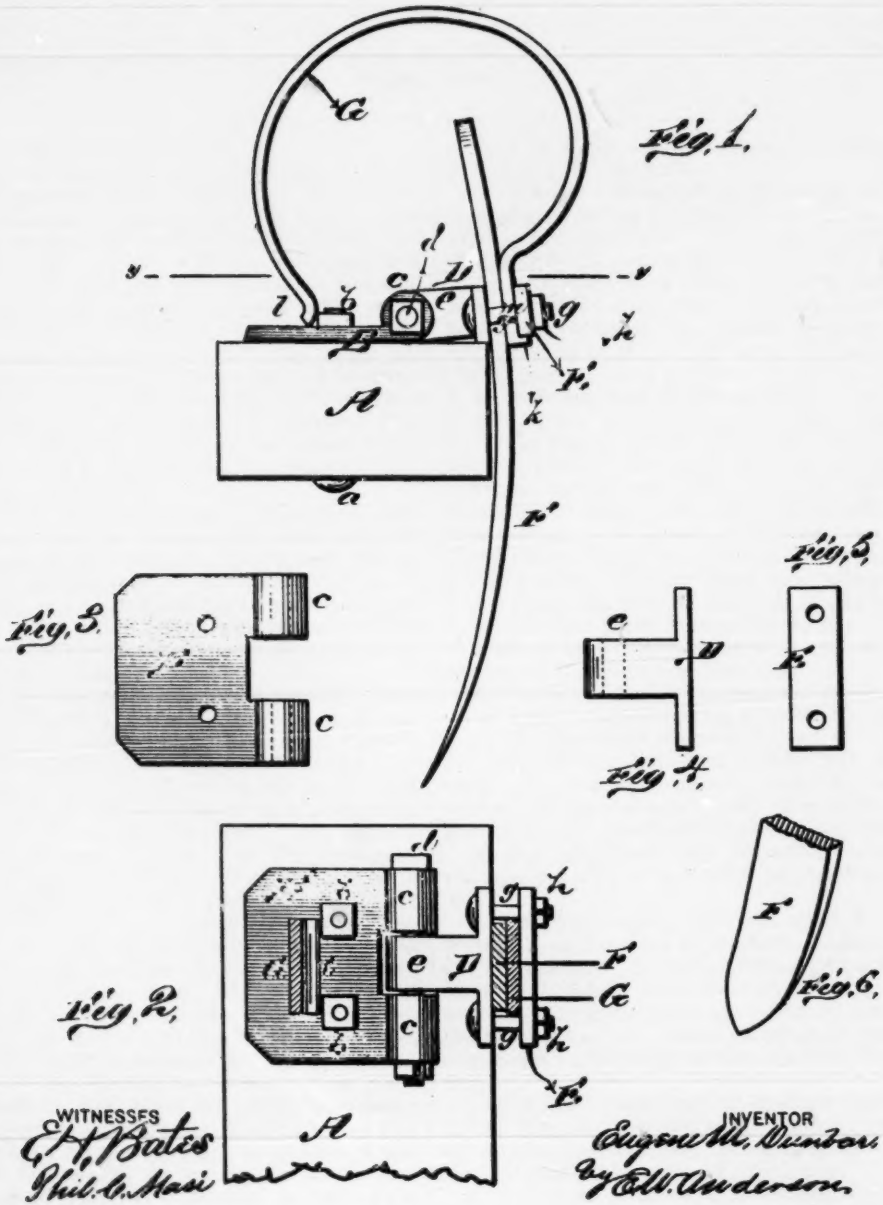


WITNESSES

E. H. Bates

Phil. C. Masi

INVENTOR

Eugene M. Dunbar

by E. W. Anderson

ATTORNEY

747

# UNITED STATES PATENT OFFICE

EUGENE M. DUNBAR, OF KALAMAZOO, MICHIGAN.

## IMPROVEMENT IN HARROWS.

Specification forming part of Letters Patent No. **211,003**, dated December 17, 1878; application filed June 1, 1878.

*To all whom it may concern:*

Be it known that I, EUGENE M. DUNBAR, of Kalamazoo, in the county of Kalamazoo and State of Michigan, have invented a new and valuable Improvement in Harrows; and I do hereby declare that the following is a full, clear, and exact description of the construction and operation of the same, reference being had to the annexed drawings, making a part of this specification, and to the letters and figures of reference marked thereon.

Figure 1 of the drawings is a representation of a side view of my improved harrow. Fig. 2 is a horizontal section of the same, taken through the line *y y* of Fig. 1; and Figs. 3, 4, 5, and 6 are details.

This invention has relation to harrows; and it consists in the construction and novel arrangement, with a harrow-tooth and spring, of the hinged shackle or clamp, forming a bearing in which said tooth is readily adjustable, and which is held down to its work by the pressure of the spring, all as hereinafter fully shown and described.

In the accompanying drawings, the letter A represents a beam of the harrow-frame, and B the base-plate of the hinged shackle or clamp, which is connected to the beam by means of bolts *a* and nuts *b*, the same bolts and nuts usually serving to fasten together the joints of the harrow-frame. The plate B is formed with two eyes, *c*, for the passage of the hinge-bolt *d*, whereby the knuckle *e* of the shackle-plate D is connected, forming the hinge-joint. The shackle-plate D is horizontally extended on each side of its knuckle, and is perforated, as shown, for the passage of the clamping-bolts *g*. These bolts extend through the rear clamp-plate, E, which is set up by means of the nuts *h* to hold the tooth F. This tooth is flattened from front to rear, and slightly curved, as shown. It is made without notches, holes, or projections, being smoothly finished on its faces and edges, so as to have all the strength of which the material is capable, to resist the strain and shocks to which it is subject in use. It is easily adjustable to cut at any desired depth by loosening the nuts in rear of the clamp-plate, setting the tooth, and then fastening the same by turning up the nuts.

G indicates the curved or C spring, which is employed to put the proper tension on the tooth, while allowing it to yield when striking stones or other obstructions in its path. It is preferably made in the loop or C form shown, being a plain steel band without notches, holes, or projections except the bearing-offsets *k l* at its ends. In this manner the entire elastic power of the spring is preserved, and it is rendered less liable to fracture under sudden strain. It is applied by fastening its heel *m* in the shackle between the tooth and the rear plate, E, the under edge of which is engaged by the end offset, *k*, of the spring, whereby the latter is secured from casual disarrangement. The spring is bowed over the upper end of the tooth, and its forward end engages with a bearing upon the base-plate B. Usually the nuts on the ends of the bolts by which this plate is secured to the beam will serve as a bearing for this end of the spring, as shown in the drawings.

The tooth applied in the manner above described will, when working, continually tremble, and thus more thoroughly pulverize the soil, and will also, when caught by any root, stone, or other obstruction, turn backward enough to let the tooth pass over such obstruction and immediately enter the soil again.

Having described this invention, what I claim, and desire to secure by Letters Patent, is—

1. The combination, with the tooth F and spring G, of the shackle or clamp, consisting of the front plate, D, having the hinge-knuckle *e* and a bolt-hole on each side thereof, the rear plate, E, having corresponding bolt-holes, the bolts *g*, and the nuts *h*, adapted to clamp said tooth and spring, substantially as specified.

2. A harrow-beam having the base-plate B bolted thereon, a tooth-shackle hinged to said base-plate, and a tension-spring bearing upon said tooth-shackle and said base-plate.

3. The combination, with a hinged shackle and a base-plate fixed to the harrow-beam, of the loop or C-spring G, bearing upon the

shackle and base-plate, and bowed over the tooth clamped in said shackle, substantially as specified.

4. The combination, with the hinged shackle, its rear plate, E, and the harrow-tooth, of the tension-spring having the offset *k*, engaging under the plate E, substantially as specified.

In testimony that I claim the above I have hereunto subscribed my name in the presence of two witnesses.

EUGENE M. DUNBAR.

Witnesses:

ROBERT E. HILL,

WILLIAM M. SHEAR.

(No Model.)

751

# C. D. CARTER.

## Spring Harrow Tooth.

No. 231,268. Patented Aug. 17, 1880.

Fig. 1.

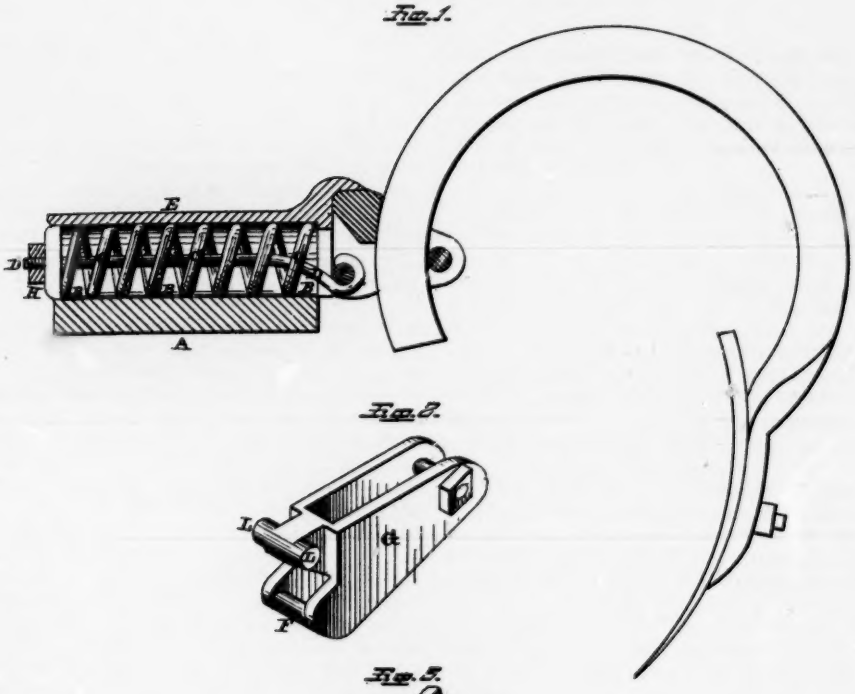


Fig. 2.




Fig. 3.

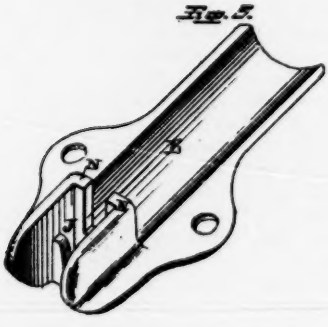


Witnesses:
W. W. Mortimer.
Wil. A. Kerr.

Inventor
Chas. D. Carter.
per
F. A. Lehmann, atty

N. PETERS, PHOTO-LITHOGRAPHER, WASHINGTON, D. C.

# UNITED STATES PATENT OFFICE.

CHARLES D. CARTER, OF GRAND RAPIDS, MICHIGAN.

## SPRING HARROW-TOOTH.

SPECIFICATION forming part of Letters Patent No. 231,268, dated August 17, 1880.

Application filed June 22, 1880. (No model.)

*To all whom it may concern:*

Be it known that I, CHARLES D. CARTER, of Grand Rapids, in the county of Kent and State of Michigan, have invented certain new and useful Improvements in Spring Harrow-Teeth; and I do hereby declare the following to be a full, clear, and exact description of the invention, such as will enable others skilled in the art to which it pertains to make and use it, reference being had to the accompanying drawings, which form part of this specification.

My invention relates to an improvement in harrow-teeth; and it consists in a curved tooth which is passed through an opening in a pivoted holding-block that is placed in the frame, and which block has an adjustable spring secured to its inner end, whereby when any strain is brought to bear upon the tooth the spring is compressed and the block turns upon its pivot in the frame so as to allow the tooth to ride over an obstruction, as will be more fully described hereinafter.

The object of my invention is to provide each tooth with a spring tension device which will allow the tooth to give sufficiently when it catches against any obstruction in the ground to prevent the breakage of the tooth or the sudden stoppage of the team, as is always the case where the tooth is not provided with a device of this nature.

Figure 1 is a vertical section of my invention. Fig. 2 is a perspective of the block in which the tooth is held. Fig. 3 is a perspective of the iron frame.

A represents a beam of the harrow, which has a groove or recess, B, made in its face, so as to receive the coiled spring C. This spring C is placed around the screw-bolt D, and is held in between the beam A and the metal frame E, as shown.

The bolt D has a hook made on its rear end, so as to catch the part F of the block G, and has a screw-thread made upon its forward end, so that the tension of the spiral spring can be changed at will by means of the nut H. This nut projects beyond the front edge of the beam A, and is always in sight, and where a wrench or other device can be applied to it at any moment for the purpose of loosening or tightening the pressure of the spring. In order to center the forward end of this spring and have it always promptly acted upon by the nut, the centering-core is placed inside of the spring and over the bolt at the forward end of the spring, and against this core the nut always bears.

In the rear end of the frame there is made a socket, J, for the pivots L of the block to fit in, and just in the rear of these pivots are formed the two flanges N, against which the rear end of the spring presses, and between which flanges the rear end of the bolt passes for the purpose of catching over the spring-block. This block, being provided with pivots, as shown in Fig. 2, fits in the socket made in the rear end of the frame to receive it, and is held firmly in place by the pressure of the spring, its rear end bearing against the two flanges made in the frame.

When any strain is brought to bear upon the tooth the block turns upon its pivots sufficiently to allow the lower end of the tooth to either give before the pressure which is brought to bear upon it in such a manner that the tooth will not be broken or so that the tooth can ride over the obstruction without stopping the forward movement of the team. As soon as this tooth is released from the pressure the spiral spring instantly draws the block back into position again, and thus causes the tooth to again assume its position in the ground.

By means of the screw on the end of the screw-bolt, as already described, the tension of the spring can be so changed as to regulate the amount of pressure which is necessary to cause the tooth to bend backward before the obstruction.

By means of my invention harrows, drill-teeth, and other such agricultural implements can be drawn along with but little or no danger of being injured or stopping the forward motion of the team unless the teeth should happen to catch under an obstruction over which it is not possible for it to pass.

Having thus described my invention, I claim—

1. A spring tension device for harrow and drill teeth, consisting of a metallic frame having a socket in its rear end, a block which can turn upon its pivots, a screw-bolt, and a spiral

754



spring, the tooth being passed through the rear end of the pivoted block, substantially as shown.

2. The metallic frame having a recess to receive the coiled spring, a socket in its rear end to receive the pivoted block, and flanges against which the rear end of the spring bears, substantially as described.

In testimony that I claim the foregoing I have hereunto set my hand this 15th day of June, 1880.

CHARLES D. CARTER.

Witnesses:
GEO. W. THOMPSON,
WILLIS B. PERKINS.

(No Model.)

H. COBB.

HARROW.

No. 284,278. Patented Sept. 4, 1883.

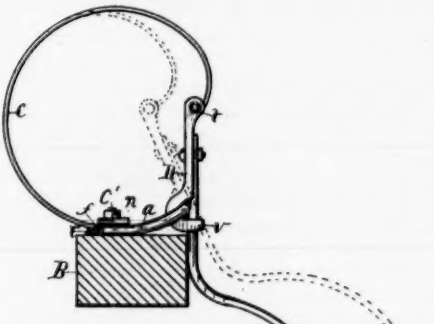


Fig. 1

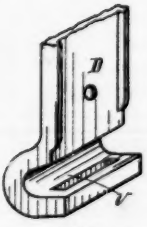


Fig. 2

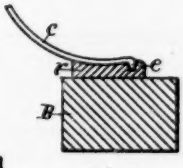


Fig. 4

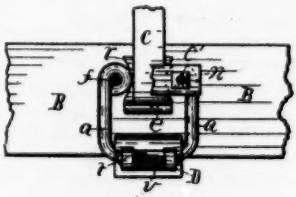


Fig. 3

Witnesses.
Ino C Perkins
Romine H Buckhout

Inventor.
Hiram Cobb
Per Lucius C West
Atty

N. PETERS, Photo-Lithographer, Washington, D. C.

# UNITED STATES PATENT OFFICE.

757

HIRAM COBB, OF KALAMAZOO, MICHIGAN.

## HARROW.

SPECIFICATION forming part of Letters Patent No. 284,278, dated September 4, 1883.

Application filed June 11, 1883. (No model.)

*To all whom it may concern:*

Be it known that I, HIRAM COBB, a citizen of the United States, residing at Kalamazoo, county of Kalamazoo, State of Michigan, have invented a new and useful Harrow, of which the following is a specification.

My invention consists in certain combinations of improved parts in that class of harrows which are provided with hinged spring-actuated shares.

In the drawings forming part of this specification, Figure 1 is a side elevation of a share and spring with the share-beam in cross-section; Fig. 2, a broken detached part in perspective; Fig. 3, a top view of Fig. 1 with the spring broken away, and Fig. 4 a cross-section on a line with the edge of the spring in Fig. 3.

The share or tooth P has an upper straight portion, as in former devices, connecting with a hinged tooth-support. The tooth-support D in the present device terminates at the lower end with an open hook or concave recess, *v*, the free end of which hook has an elongated opening or slot to receive the straight portion of the share. Such a tooth-support is more easily and cheaply made than former styles having hinging-eyes, which require a core in casting, and said support D can be readily connected and detached from the bail *a* by simply hooking and unhooking. The upper portion of the share, when coupled with the share-support D, as in Fig. 1, closes the open side of the hook or recess *v*, thus forming a hinging-eye for the hinging-bail *a*. The hinging-bail *a* has two eyes, through which the binding-bolts *n* are located. From these eyes the loop portion of the bail extends rearward and upward, thus bringing the hinge above the beams and freely allowing the hook *v* to be connected with said bail. Between said bail-eyes is located a seat, *r*, for spring *c*. It is concaved on top, and has a recess in the end to receive the hooked end *e* of the spring *c* to prevent the spring from slipping beneath the binding-plate *c'*. The sides of the seat *r* are concaved to fit around the eyes of the hinging-bail *a* to hold said seat in place. The spring *c* consists of a curved or bowed strip of spring metal. It is hinged to the share-support D at *t*. A more prompt and unvarying spring action is thus obtained, as a better purchase is exerted on the spring thus located and secured in position to be contracted. Such a construction and combination of simple parts greatly facilitates the construction and operation of this class of harrows.

Having thus described my invention, what I claim as new is—

1. The combination of a spring-actuated share with the hinging-bail and the share-support having the open slotted hook, said share and hook, when connected, forming a hinging-eye to said bail, substantially as set forth.

2. The combination of the share-support, the hinging-bail, the concaved seat having the end recess, the spring and binding-plate, the lower end of said spring provided with the hook and the upper end hinged to the tooth-support, all arranged substantially as described.

3. The share-support having the open hook, the share and the spring hinged to the upper end of said share-support and provided with the hook, in combination with the hinging-bail having the eyes and the upwardly-inclined loop, the concaved seat having the hook-recess, and the concave sides between the eyes of the hinging-bail and the binding-plate, substantially as specified and shown.

4. The combination of the hinged share-support having the open bail-hook, a connecting-share and hinging-bail, the concave spring-seat, and the spring having its lower end rigidly secured in said seat and its upper end hinged to said share or tooth-support, substantially as set forth.

In testimony of the foregoing I have hereunto subscribed my name in the presence of two witnesses.

HIRAM COBB.

Witnesses:

ROMINE H. BUCKHOUT,

OSCAR K. BUCKHOUT.

(No Model.)

759

# B. F. RIX.

## HARROW.

No. 287,965. Patented Nov. 6, 1883.

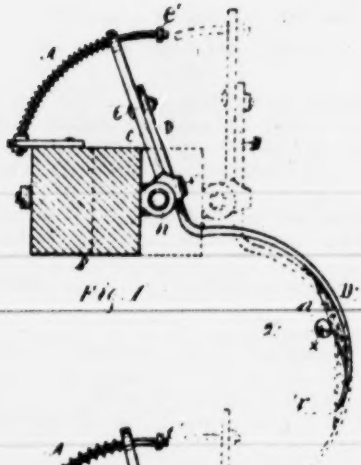

Fig. 1

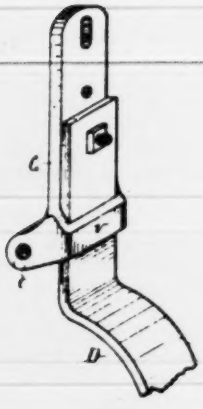

Fig. 3

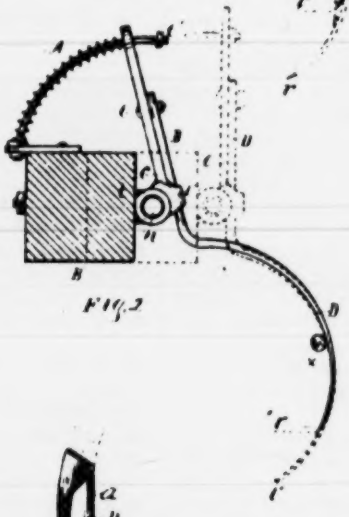

Fig. 2

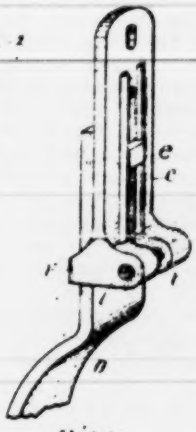

Fig. 4

Fig. 5

Witnesses.
Jno. C. Pilkins
John Jo. Chase

Inventor.
Benj. F. Rix
Per Lucius C. Hart
Atty.

# UNITED STATES PATENT OFFICE.

BENJAMIN F. RIX, OF KALAMAZOO, MICHIGAN, ASSIGNOR OF ONE-THIRD TO MARY H. KIPP, OF SAME PLACE.

## HARROW.

SPECIFICATION forming part of Letters Patent No. 287,965, dated November 6, 1883.

Application filed May 19, 1882. (No model.)

*To all whom it may concern:*

Be it known that I, BENJAMIN F. RIX, a citizen of the United States, residing at Kalamazoo, county of Kalamazoo, State of Michigan, have invented a new and useful Harrow, of which the following is a specification,

My invention has for its object certain improvements in harrow-teeth, and in the means for connecting them with the frame.

In the drawings forming a part of this specification, Figure 1 is a side elevation: Fig. 2, a side elevation of a differently-constructed tooth, introduced for the purpose hereinafter explained; Figs. 3 and 4, broken portions enlarged, showing a front and rear view in perspective; Fig. 5, a section on line 2 2 in Fig. 1 in perspective.

The hinged supporting-bar *c*, with which the tooth is connected, is made all in one piece—that is, the upright part, with which the tooth is connected by a bolt, *e*, is provided with an integrally-formed base consisting of the hinging-eyes *f f* and the loop *r*, which surrounds the tooth. The bar *c* is hinged to the frame B, in the usual manner, by bolt *s*. Such a construction is easily and cheaply made, compared with former tooth-supports, and the operation of connecting the tooth therewith greatly facilitated.

In constructing the tooth D a portion of the bow a little above the lower end is formed vertically concaved from the rear side, with the front edge or apex, *a*, of the convex side describing a straight line, Fig. 1, while the curved configuration of the edges remains the same throughout, as in a bowed tooth not having the improvement, Figs. 1 and 2. The lower or working end of the tooth is not convexed. The tooth receives its elastic effect from the spring on rod A. Many useful results are attained in the operation of such a tooth, aside from ease in draft and beneficial effects on the soil, a prominent one of which is that the tooth, when intercepting a root or obstruction, *x*, swings back and upward quicker and farther during a given movement of the harrow than a tooth having a like bow, Fig. 2, without the improvement in Fig. 1. The same forward movement of the harrow is shown in each of these figures, the dotted position showing the normal condition of the parts when at rest, with the tooth having just met the root *x*. Said root is located at the same vertical distance below the harrow-frame B. The difference in upward swing of the teeth is illustrated by the difference in distance between the dotted line at *r'* and the dotted end *r*.

When the harrow in each figure is moved on ahead, the tooth in Fig. 2 will hang to the root *x*, while the tooth in Fig. 1 will continue to swing up until the working end is met, when, owing to the angle of the bow at that time, it will readily pass over the root.

Having thus described my invention, what I claim is—

1. In a harrow, a tooth-support consisting of the flat upright portion, provided with a base integrally formed therewith, said base having the two lugs on one side horizontally perforated, and the loop on the other side having a vertical opening, substantially as set forth.

2. A bowed harrow-tooth having the convexed portion on the inner side of the bow, above the working end, the apex thereof describing a straight line, substantially as described.

3. A bowed tooth vertically concaved from the rear, above the working end, forming a convex portion on the inside of said bow, the apex of which is straight, while the curve of the edges of the bow is undisturbed, substantially as specified and shown.

In testimony of the foregoing I have hereunto subscribed my name in the presence of two witnesses.

BENJAMIN FRANKLIN RIX.

Witnesses:

JOHN H. CHASE,

N. O. NETEBROCK.

743

(No Model.)

# G. MOORE.

## SPRING TOOTH FOR CULTIVATORS.

No. 503,288. Patented Aug. 15, 1893.

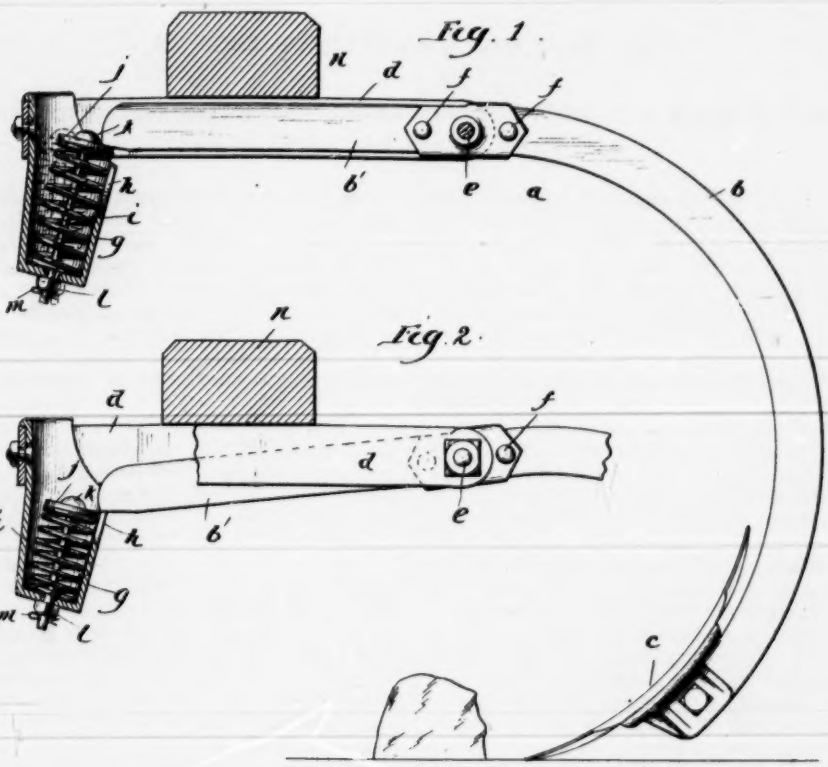


Fig. 3.

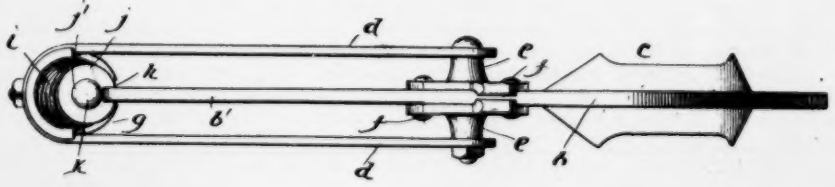

Witnesses
Nellie McKibben
Julia M. Bristol

Inventor
Gilpin Moore
by Bond, Adams & Pickard.
Attorneys

# UNITED STATES PATENT OFFICE.

GILPIN MOORE, OF MOLINE, ILLINOIS, ASSIGNOR TO THE DEERE & COMPANY, OF SAME PLACE.

## SPRING-TOOTH FOR CULTIVATORS.

SPECIFICATION forming part of Letters Patent No. 503,288, dated August 15, 1893.

Application filed June 10, 1892. Serial No. 436,259. (No model.)

*To all whom it may concern:*

Be it known that I, GILPIN MOORE, a citizen of the United States, residing at Moline, in the county of Rock Island and State of Illinois, have invented certain new and useful Improvements in Spring-Teeth for Cultivators and other Agricultural Implements, of which the following is a specification, reference being had to the accompanying drawings, in which—

Figure 1 is a side elevation of the tooth, the pocket which holds the spring being in section. Fig. 2 is a similar view of a portion of the tooth, showing the position of the parts when the tooth strikes an obstruction; and Fig. 3 is a top view, with the supporting cross beam removed.

My invention relates to spring teeth adapted to be used upon cultivators or other similar farming implements. Heretofore in the construction of spring teeth there have been two varieties: first, those in which the spring of the tooth is inherent in the tooth or shank itself and is due to its own elasticity; and second, those having a joint furnished with an adjustable spring lock, which permits temporary movement under favoring circumstances. In the former, the tooth, when drawn through the soil to be cultivated, has a vibratory or tremulous motion, which greatly aids in pulverizing. In the latter, the spring lock holds the tooth rigidly to its position when drawn through the soil, until an obstruction is met with. Then the spring is unlocked, permitting the lower part of the shank to bend backward and pass the obstruction when the spring returns the shank to its original position and it proceeds rigidly as before in its pathway through the earth.

It is to be noticed that the function performed by each class of teeth is different. In the first, a vibratory pulverizing is effected, which is entirely absent in the second class. In the second class, the character of the work done is exactly the same as has always been accomplished by the common form of rigid tooth implements, the spring lock simply being added as a safety device, to prevent bending or breaking the shank. It is evident that when a tooth of the first described class meets with an immovable obstacle unless the machine is stopped at once the tooth will be more or less straightened. If this straightening force is greater than the limit of elasticity of the tooth, the tooth will either be broken or permanently straightened, thereby destroying or impairing the utility of the implement. The usefulness therefore of both classes is limited, the first by the elasticity of the tooth and the second by its inability to perform vibratory pulverizing.

No elastic tooth machine has heretofore been made with a safety device to prevent injury to the tooth when a solid obstruction is met, and no rigid tooth machine has yet appeared capable of doing the work of the elastic shank implements.

The principal object of my invention is to avoid the objections common to spring teeth as heretofore constructed, which I accomplish by providing a tooth having a rigid shank, which is given a spring action by the action of a separate spring. Another object of my invention is to improve in general the construction and operation of spring teeth. I accomplish these objects as hereinafter specified and as illustrated in the drawings.

That which I regard as new will be pointed out in the claims.

In the drawings,—*a* indicates a spring tooth, which consists of a rigid shank *b* bent to a suitable shape, and carrying on its lower end a shovel *c*. The shovel *c* may be of any suitable pattern, and may be secured to the shank *b* in any desired manner, or be made integral therewith. The shank *b* is trunnioned near its upper end in a yoke *d*, by trunnions *e*, as best shown in Figs. 1 and 3, so as to swing in a vertical plane. The trunnions *e* are rigidly secured upon opposite sides of the shank *b* by rivets *f*, and are arranged so that they will fit closely upon the shank, as best shown in Fig. 3. At the inner end of the yoke *d* is rigidly secured a pocket *g*, which depends therefrom, as best shown in Figs. 1 and 2. The pocket *g* is of about the shape of a frustum of a cone, the smaller end being at the bottom; and the bottom is inclined, as shown.

*i*, indicates a coil spring, which is mounted in the pocket *g*. By constructing the pocket *g* in the shape of a frustum of a cone and inclining the bottom of the pocket, as described,

the spring will lie in an inclined position and next to the inner wall of the pocket, as best shown in Figs. 1 and 2. The upper end may thereby be pressed away from the inner wall, for purposes which will appear hereinafter.

*j*, indicates a plate, which rests upon the upper end of the spring *i* and is held in place by means of a bolt *k* which passes downward through the spring *i* and the bottom of the pocket *g*, and is secured in place by means of a washer *l* and a key *m*, or in any other suitable manner. The plate *j* is of about the size of the spring *i*, as shown in the drawings.

*h*, indicates a slot formed in the upper end of the inner portion of the pocket *g*, for purposes which will appear hereinafter.

*b'*, indicates a portion of the shank *b* which extends from the point at which the shank is trunnioned, nearly to the other end of the yoke *d*, its length being such that it will project a short distance beyond the inner edge of the pocket *g*. The extension *b'* is preferably formed integral with the main portion of the shank *b*, but it may consist of a separate piece rigidly attached thereto. The arrangement is such that when the shovel *c* is lifted, the inner end of the extension *b'* will move downward through the slot *h*, as indicated in Fig. 2. The under side of the extension *b'* is fitted at the end, to adapt it to bear squarely upon the plate *j*, and the upper portion of the end of the extension *b'* is rounded, as shown in Figs. 1 and 2.

*n*, indicates the cross beam of a cultivator gang, to the under side of which the yoke *d* is secured by clips or other suitable devices, in such manner that the downward motion of the extension *b'* of the shank *b* will not be prevented.

The operation of my improved tooth is as follows:—The position of the various parts is normally as shown in Fig. 1, the extension *b'* lying then in a horizontal position, its end bearing upon the plate *j*. When the cultivator shovel strikes an obstruction, the shovel *c* will be moved backward, when the extension *b'* will be thrown downward, compressing the spring *i* to the position shown in Fig. 2, when the extension *b'* will be clear of the plate *j* and will move downward through the slot *h*, permitting the shovel *c* to be raised the necessary height to pass over the obstruction. When the obstruction has been passed and the cultivator beam is raised, the weight of the shovel blade *c* aids in throwing the forward end of the extension *b'* in an upward direction into engagement with the spring pressed plate *j*, whereby the shovel *c* and the tooth *a* are returned to operative position by gravity which is very desirable and materially simplifies the machine. The upward movement of the extension *b'* will be limited by the beam *n*, or by a suitable stop if the beam is omitted or elsewhere located. When the cultivator is in operation, the action of the spring *i* upon the extension *b'* will give to the shovel a tremulous or vibratory motion, which will greatly aid in pulverizing the earth, substantially as is the case with spring teeth in which the springiness is due to the inherent elasticity of the teeth. When the shank *b* and extension *b'* are made integral with each other, as hereinbefore suggested, instead of providing two separate trunnions *e*, *e*, as shown in the drawings, a single pin passing through the shank and secured therein may be used, in which case the arms or bars of the yoke *d* may be brought nearer together than they are shown in Fig. 3. The rearward incline of the bottom of the pocket or spring case *g* constantly tends to throw the upper end of the spring backward, so that when the forward extension of the tooth bar is brought up to position, the spring will pass under it and will remain under it without being jarred out of position.

One of the principal characteristics of my improvement is the employment of a spring, which will have all of the uses of a spring in giving the tooth a vibratory action when in use, and in permitting the tooth bar to escape from the spring when under severe strain or pressure. Other means than the tilting bottom to the box or case *g* may be used for throwing the upper end of the spring under the end of the bar *b'*, such as a second spring, but the construction shown is that which I prefer.

That which I claim as new, and desire to secure by Letters Patent, is—

1. The combination with a pivoted tooth shank, of a spring normally acting upon said shank to hold it in an operative position and to impart to it a tremulous motion when traversing the soil, said spring being adapted to be thrown out of operation under extraordinary backward pressure upon said shank, substantially as described.

2. The combination with a pivoted tooth shank, of a stop acting normally to hold said shank in operative position and to be thrown out of operation to permit said shank to swing under extraordinary backward pressure thereupon, said shank and stop being adapted to return by the action of gravity into engagement with each other to bring said shank to its operative position after the pressure is removed, substantially as described.

3. The combination with a yoke or support, of a tooth shank *b* pivoted to the yoke or support and having the extension *b'* in front of its pivot, and a spring trip located beneath the front end of the said extension for causing a tremulous motion of the tooth shank and releasing the forward extension thereof under extraordinary back pressure on said tooth shank, substantially as described.

4. The combination with a pivoted tooth shank, of a spring trip located under the forward end of said shank in front of the pivot thereof for holding the shank normally in operative position, said spring trip being moved out of engagement with the shank by extraordinary back pressure on said shank and the

latter being returned by gravity to its normal position when the back pressure is removed, substantially as described.

5. The combination with a yoke and a rigid tooth shank pivotally mounted therein, and adapted to swing in a vertical plane, said shank having an extension $b'$, of a spring stop under said extension for holding the tooth in operative position under normal pressure, said stop being adapted to be disengaged from said extension under extraordinary pressure to permit the tooth to swing freely, substantially as described.

6. The combination with the swinging shank $b$, having extension $b'$, of devices for supporting said shank, and a spring $i$ under the end of the extension $b'$, the upper end of said spring being inclined toward said extension, and being adapted to be pressed away therefrom, substantially as and for the purpose specified.

7. The combination with the swinging shank $b$, having extension $b'$, of the yoke $d$, pocket $g$, having an inclined bottom and sides, slot $h$ in said pocket, and spring $i$, substantially as and for the purpose specified.

8. The combination with the swinging shank $b$, having extension $b'$, of the yoke $d$, pocket $g$, having an inclined bottom and sides, slot $h$ in said pocket, spring $i$, plate $j$, rod $k$ and key $m$, substantially as and for the purpose specified.

GILPIN MOORE.

Witnesses:
C. H. POPE,
J. E. POOLE.

769

D. J. LAMPRELL & F. COOK.

CULTIVATOR.

APPLICATION FILED SEPT. 4, 1913.

**1,141,804.** **Patented June 1, 1915.**

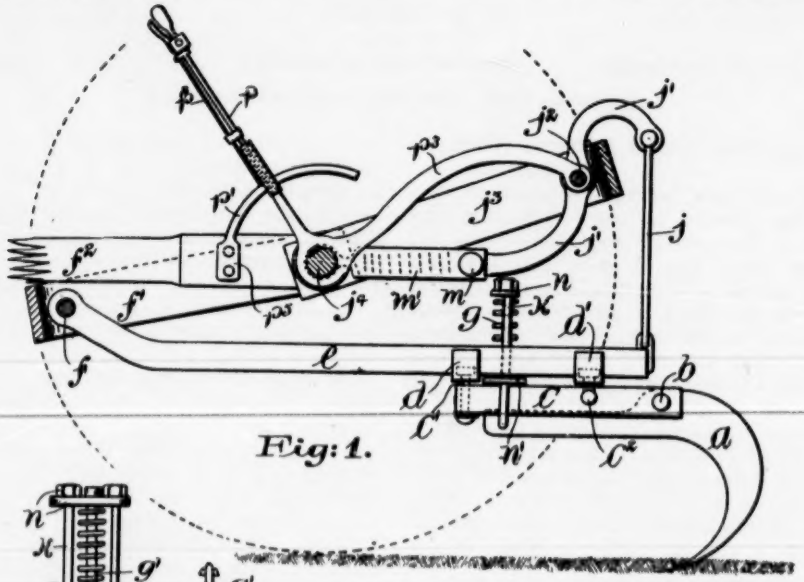

Fig: 1.

Fig: 3.

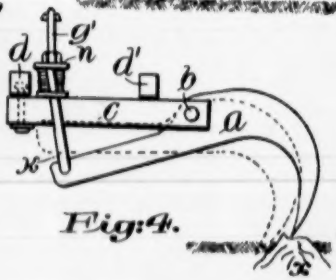

Fig: 4.

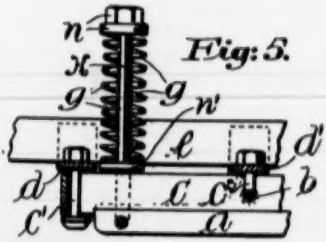

Fig: 5.

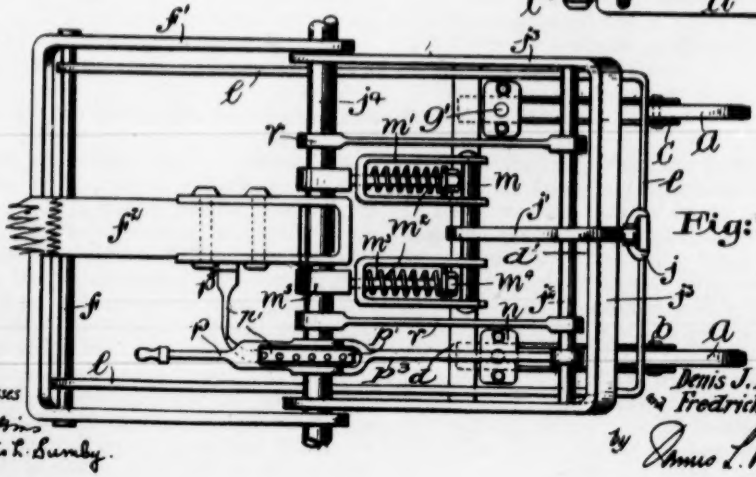

Fig: 2.

Witnesses
Norris L. Lumby.

Inventors
Denis J. Lamprell
Fredrick Cook,
by James L. Norris.

# UNITED STATES PATENT OFFICE.

DENIS JOHN LAMPRELL AND FREDRICK COOK, OF DOWERIN, WESTERN AUSTRALIA, AUSTRALIA.

## CULTIVATOR.

1,141,804. Specification of Letters Patent. Patented June 1, 1915.

Application filed September 4, 1913. Serial No. 788,169.

*To all whom it may concern:*

Be it known that we, DENIS JOHN LAMPRELL and FREDRICK COOK, both subjects of the King of Great Britain, and residing at Dowerin, Western Australia, Commonwealth of Australia, have invented certain new and useful Improvements in Cultivators, of which the following is a specification.

This invention relates to improvements in cultivators, and it embodies the use and provision of a pressure spring for each separate pivoted tine, and, also, a pressure spring or springs for each section of tines, the latter springs being employed to impart flexibility to the frame. The object of said springs is to cause or urge the tines, either separately or conjointly as a group or gang, to the working position immediately after passing over an obstacle, and, also, to urge the tines to their work and to maintain them at a uniform depth.

The invention will now be explained with the aid of the annexed drawings, in which—

Figure 1 is a side sectional elevation of the improved cultivator showing the application of one of the pressure springs to a tine and, also, to the frame carrying said tine. Fig. 2 is a plan view. Fig. 3 is a rear end view of one of the tines and its carrier bracket. Fig. 4 is a detail showing, in full lines, the passage of the tine over an obstacle, and, in dotted lines, the normal position of the tine. Fig. 5 is a detail showing the manner of securing the tine-carrier bracket to the frame.

In said figures $a$ indicates one of the tines, of which there may be any number, as will be understood. This tine is pivoted at $b$ to its carrier bracket $c$, which latter also acts as a guide to insure correct working of the tine. The said carrier bracket $c$ is U-shaped and is secured to the cross-bars $d$ and $d^1$ of the U-shaped frame $e$, the cross-bars mentioned extending across said frame and having their ends turned upward and suitably secured to the side members of said frame. The front end of said bracket $c$ is secured to the cross-bar $d$ by the bolt $c^1$, and the central portion thereof is secured to the other cross-bar $d^1$ by an inverted T-bolt $c^2$, whose head is riveted through the side cheeks of the bracket. The frame $e$, at its front end, is pivoted on the cross-bar $f$, which latter forms part of the main frame $f^1$ and is rigidly attached to the draft pole $f^2$ of the cultivator.

Each tine $a$ is provided with its own pressure spring $g$, which is suitably guided on the rod $g^1$ and operatively held in the U-shaped bridle piece K, the latter having a suitable tension adjustment device $n$, here shown as consisting of a pair of nuts and a head plate. The connecting or bottom portion of this bridle passes through the tine $a$, and its arms pass through the foot plate $n^1$, as shown clearly in Fig. 3, the tension of spring $g$ operating as between the adjustment device $n$ and the foot plate $n^1$, which latter is mounted on the carrier bracket $c$.

The front of the frame $e$ is pivoted to the cross-bar $f$, and is suspended at its rear end by the link $j$ from an arm $j^1$, said arm being pivoted on the cross-bar $j^2$ of the secondary frame $j^3$ of the cultivator. Frame $j^3$ is rigidly connected to the main axle $j^4$. Arm $j^1$, at its other end, is connected to the cross-bar $m$ carrying the bridles $m^1$ in which the spiral springs $m^2$ are tensionally held on the pins $m^3$ by the nuts $m^4$. The pins $m^3$ extend through openings in the forward ends of the bridles $m^1$ and have their heads $m^5$ hingedly connected to the axle $j^4$ of the cultivator, such connection serving to impart rigidity and firmness of action to the bridles and their contained tension springs $m^2$. These springs $m^2$ act to exert pressure upon the frame as a whole, in the same way as the springs $g$ upon the tines.

When the tine meets an obstacle $x$, as seen in Fig. 4, its rear portion is forced to rock upward on its pivot $b$ toward the stay bar $d^1$ of the frame $e$, while the downward movement of its front end contracts the spring $g$.

The pressure springs $m^2$ of the frame, as also the springs $g$ of the tines, are set to the approved normal working tension by means of the nuts $m^4$ and the adjustment devices $n$, respectively, and the said springs $m^2$ are also controlled as a whole by the single lever $p$, which is keyed on the axle $j^4$ and retained in any position by the usual notched quadrant $p^1$ and pawl $p^2$, the quadrant being rigidly secured at $p^3$ to the draft pole $f^2$. The lever $p$, by its arm $p^4$, is operatively connected to the cross-bar $j^2$ carrying the arm $j^1$, whereby said arm $j^1$ and connected members and parts are operated. This lever $p$, while controlling all the tines

of the cultivator together, allows each tine independence of action, and it also sets the depth of cut for the tines by pressing frame *e* downward by means of the arm $j^1$ and link *j*, while each separate tine is kept to its work by its spring *g*. Each tine is controlled by its own spring *g*, and if such spring prove insufficient to allow the tine to rise and pass over the obstacle, then the springs $m^2$ respond to the pressure and allow the whole frame *e* to rise sufficiently high to clear said obstacle. Any number of strengthening bars $r^1$ may be used, these bars being keyed to the axle $j^4$ and also to the cross-bar $j^3$. They act and move in unison with the lever *p* and are auxiliary to the frame $j^3$.

We claim:—

1. In a cultivator, the combination of a frame provided with a cross-bar; a horizontal guide bracket rigidly secured to said bar; a tine pivoted intermediate its ends to said bracket; and a pressure spring for normally holding the front end of said tine in raised position.

2. In a wheeled cultivator, the combination of a cultivator frame; an axle to which said frame is connected; a rearwardly-extending arm carried by said axle; a second frame pivotally connected at its front end to said cultivator frame and suspended at its rear end from said arm; and resilient devices for normally holding said second frame in lowered position.

3. In a wheeled cultivator, the combination of a cultivator frame; an axle to which said frame is connected; a longitudinally-arranged arm fulcrumed intermediate its ends in the cultivator frame; a second frame pivotally connected at its front end to the cultivator frame and suspended at its rear end from the rear end of said arm; and resilient means connected to the front end of said arm for normally holding said second frame in lowered position.

4. In a wheeled cultivator, the combination of a cultivator frame; an axle to which said frame is connected; a rearwardly-extending arm carried by said axle; a longitudinally-arranged arm pivotally connected intermediate its ends to the rear end of the first-named arm; a link suspended from the rear end of the second-named arm; a second frame pivotally connected at its front end to the cultivator frame and having its rear end connected to said link; and resilient connections between said axle and the front end of the second-named arm for normally holding said second frame in lowered position.

In testimony whereof we have hereunto set our hands in presence of two subscribing witnesses.

DENIS JOHN LAMPRELL.
FREDRICK COOK.

Witnesses:
JOHN MCPHERSON,
R. H. LEESON.

773

May 19, 1931. J. H. ROBERTS 1,805,599

COTTON CHOPPING ATTACHMENT FOR CULTIVATORS

Filed March 8, 1930

Fig. 1.

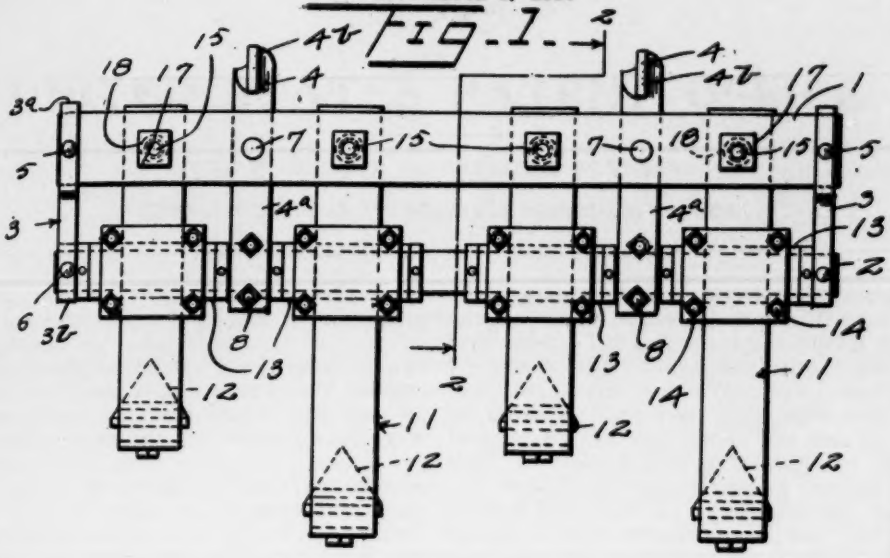


Fig. 2.

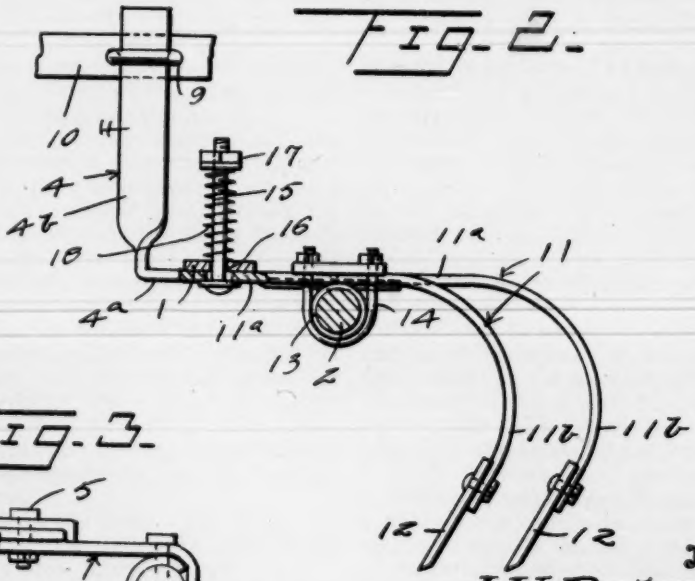


Fig. 3.

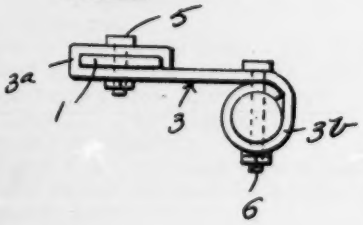


Inventor

J. H. Roberts

By Watson E. Coleman

Attorney

Patented May 19, 1931 1,805,599

775

# UNITED STATES PATENT OFFICE

JOHN H. ROBERTS, OF HATFIELD, ARKANSAS

## COTTON CHOPPING ATTACHMENT FOR CULTIVATORS

Application filed March 8, 1930. Serial No. 434,285.

This invention relates to cotton choppers, and more particularly to a cotton chopping attachment for cultivators.

The invention has for one of its objects to provide a novel, simple and highly efficient cotton chopping attachment which shall be adapted to be readily connected to a riding or walking cultivator.

To attain the foregoing and other objects, the nature of which will appear as the description proceeds, the invention comprehends the provision of a cotton chopping attachment which shall embody a frame, means adapted to secure the frame to a cultivator, standards equipped with chopping hoes and connected to the frame for independent pivotal movement thereon, and means yieldingly holding the standards against pivotal movement with respect to the frame.

The invention further comprehends the provision of a cotton chopping attachment wherein the frame shall embody a bar and a shaft, wherein the means for connecting the frame to a cultivator shall embody brackets having horizontal arms fixed to the bar and shaft and vertical arms adapted to be secured to the cultivator, and wherein the hoes standards shall be pivotally mounted upon the shaft with their front ends arranged beneath the bar, and wherein the means for yieldingly holding the standards against pivoted movement shall embody rods carried by the standards and passing freely through the bar and springs bearing on the bar and against the rod.

The invention is hereinafter fully described and claimed, and illustrated in the accompanying drawings, wherein:

Figure 1 is a top plan view of the cotton chopping attachment;

Figure 2 is a sectional view taken on the vertical planes indicated by the line 2—2 of Figure 1, and

Figure 3 is a view in end elevation of the frame of the cotton chopping attachment.

The cotton chopping attachment comprises a bar 1 and a shaft 2 of which the latter is located in rear of the former. The bar 1 and shaft 2 are connected at their ends by links 3 and the bar, shaft and links provide a frame of elongated rectangular contour in plan and adapted to be connected to a cultivator by brackets 4. The links 3 are provided at their front ends with rectangular loops $3^a$ for the reception of the ends of the bar 1, and are provided at their rear ends with circular loops $3^b$ for the reception of the ends of the shaft 2. Bolts 5 passing through the bar 1 and loops $3^a$ and bolts 6 passing through the shaft 2 and loops $3^b$, secure the bar, shaft and links $3^b$ in assembled relation, the bolts 6 holding the shaft against rotation. The brackets 4 have horizontal arms $4^a$ which rest upon the bar 1, shaft 2 and are secured to the bar by bolts 7 and to the shaft by clamps 8. The brackets 4 also have vertical arms $4^a$ adapted to be secured by bolts 9 to any suitable parts of a cultivator. The brackets 4 are arranged between the links 3 and the transverse center of the frame, and their horizontal arms $4^a$ strengthen and reinforce the frame at the points where it is connected to the cultivator. The brackets 4 may be secured to those parts of a cultivator to which the gang bars are secured, one of such parts being diagrammatically shown and designated 10.

Standards 11 having straight portions $11^a$ and curved portions $11^b$, are secured to the frame through the medium of their straight portions which have their front ends arranged at the under side of the bar 1 and rest at points intermediate their ends upon the shaft 2. The standard portions $11^b$ extend downwardly and forwardly and are provided at their lower ends with blades 12. The attachment may be provided with any desired or required number of the blade carrying standards 11. The standard portions $11^a$ are of such length as to arrange the blades 12 in front and rear rows.

The standards 11 are rockably supported upon the shaft 2 by bearing sleeves 13. The standard portions $11^a$ rest upon the bearing sleeve 13, and are secured thereto by U-bolts 14. As the front ends of the standards 11 contact with the under side of the bar 1, the rocking movement of the standards is limited to a direction which will permit the blades 12 to move upwardly and rearwardly and the

blades will move in this direction when they encounter stones or the like obstructions. The standards 11 are provided at their front ends with upwardly extending rods 15 which pass freely through openings 16 in the bar 1 and are provided at their upper ends with nuts 17. Springs 18 are mounted on the bolts 15 between the bar 1 and nuts 17, and serve to yieldingly hold the standards 11 against rocking movement.

The attachment may be readily connected through the medium of brackets 4 to a riding or walking cultivator, and will, when in use, chop or cut down every other stand of cotton. It may also be used for the purpose of plowing in oats, plowing level land and tearing down ridges. It is strong and durable, and may be manufactured and sold at a comparatively low cost.

While I have described the principle of the invention, together with the structure which I now consider the preferred embodiment thereof, it is to be understood that the structure shown is merely illustrative and that such changes may be made, when desired, as fall within the scope of the invention as claimed.

I claim:—

1. A cultivator attachment of the character set forth, comprising a frame embodying a front bar and a rear shaft, attaching brackets secured to the frame, standards having straight front portions and curved rear portions, the straight standard portions extending across the shaft and having their front ends positioned in contact with the rear side of the bar and the rear portions of the standard extending downwardly and forwardly, blades secured to the lower ends and the rear portions of the standards, means rockably connecting the standards to the shaft, and means cooperative with the bar and standards to yieldingly hold them against rocking movement.

2. A cultivator attachment of the character set forth, comprising a frame embodying a front bar and a rear shaft, bearing sleeves rotatably mounted on the shaft, standards having straight front portions and curved rear portions, the front standard portions resting upon the sleeves and having their front ends arranged in contact with the under side of the bar and the rear standard portions extending downwardly and rearwardly, blades secured to the lower end of the rear standard portions, means securing the front standard portions to the bearing sleeves, bolts secured to the front ends of the front standard portions and extending upwardly through the bar and provided at their upper ends with nuts, and coil springs arranged upon the bolts between the bar and nuts.

3. A cultivator attachment of the character set forth, comprising a bar provided with openings, a shaft located rearwardly of the bar, links connecting the terminals of the bar and shaft, brackets having vertical and horizontal portions and having their horizontal portions secured to the bar and shaft, bearing sleeves rotatably mounted upon the shaft, standards having straight front portions and curved rear portions, the standard front portions resting upon the bearing sleeves and having their front ends contacting with the lower side of the bar and the standard rear portions extending downwardly and forwardly, means securing the front standard portions to the bearing sleeves, bolts secured to the front ends of the front standard portions and extending upwardly through the openings in the bar and provided at their upper ends with nuts, coil springs surrounding the bolts between the bar and nuts, and plates secured to the lower ends of the rear standard portions.

In testimony whereof I hereunto affix my signature.

JOHN H. ROBERTS.

777

Dec. 4, 1934. T. J. ERDMAN 1,982,862

CULTIVATOR

Filed May 3, 1933

FIG-1

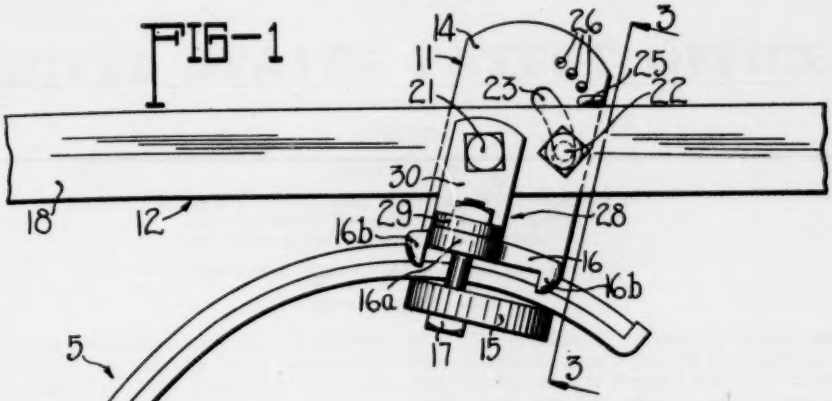


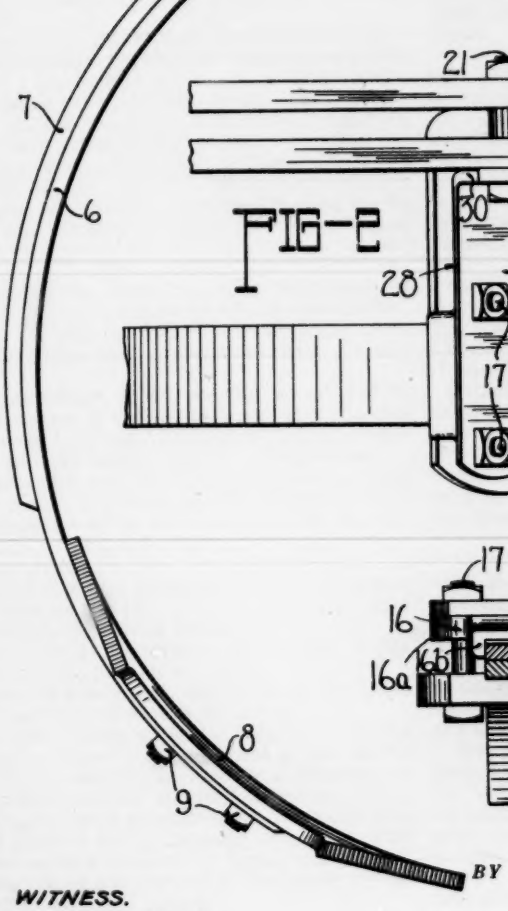


FIG-2

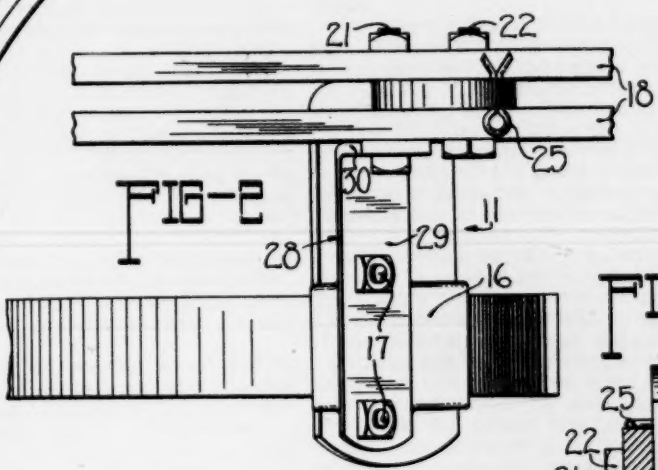


FIG-3

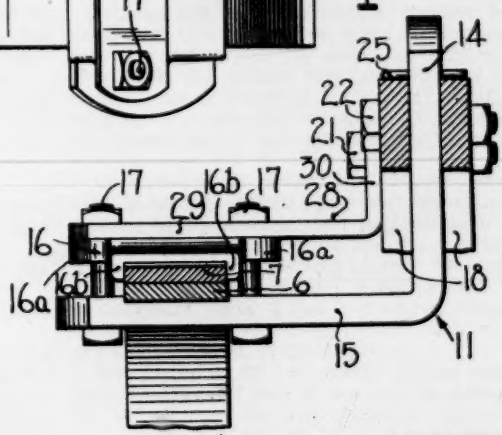


INVENTOR
Theodore J. Erdman

BY
E. C. Boff
ATTORNEY

WITNESS.
Edward Melin.

Patented Dec. 4, 1934 1,982,862

579

# UNITED STATES PATENT OFFICE

1,982,862

## CULTIVATOR

Theodore J. Erdman, Horicon, Wis., assignor to The Van Brunt Manufacturing Company, Horicon, Wis., a corporation of Wisconsin

Application May 3, 1933, Serial No. 669,149

4 Claims. (Cl. 97—198.1)

My invention pertains to spring tooth cultivators and relates particularly to a connecting bracket connecting a spring tooth to a cultivator drag bar.

The principal object of my invention is to provide a connecting bracket which may be connected to a drag bar in such a manner as to be easily and readily adjusted to vary the depth of penetration of the spring tooth and to securely hold the spring tooth in the desired adjusted position.

Another object of my invention is to provide a frangible member for the connecting bracket which may be adjusted to engage the drag bar in any of the adjusted positions of the connecting bracket to normally assist in holding the bracket in the desired adjusted position, but which is capable of shearing when the spring tooth engages an unyielding object so as to release the bracket, thereby allowing the tooth to swing away from the obstruction and prevent breakage to the tooth.

Another object is to provide a connecting bracket having means between the drag bar and spring tooth to strengthen the connecting bracket and to hold the spring tooth in rigid position.

Other objects and advantages of my invention will be apparent to those skilled in the art after a consideration of the following detailed description, taken in conjunction with the accompanying drawing wherein:

Figure 1 is a side elevational view of a spring tooth and a section of a drag bar and illustrating my improved connecting bracket;

Figure 2 is a fragmentary plan view of the structure shown in Figure 1; and,

Figure 3 is a sectional view taken on the plane of the line 3—3 of Figure 1.

The spring tooth, which is referred to in its entirety by numeral 5, comprises a flat spring steel shank 6 bent in the form of a letter C. A short reinforcing leaf 7, also constructed of flat spring steel, is bent to conform to the upper portion of shank 6 and is disposed in contact with the outer surface thereof. A double-pointed soil engaging shovel 8 is secured to the lower end of shank 6 by means of bolts 9.

The spring tooth 5 is clamped to a connecting bracket 11 which in turn is adjustably connected to a drag bar 12. The connecting bracket 11 is formed of an angle member and comprises a vertical leg 14 and a horizontal leg 15. The upper end of tooth 5 is clamped to the horizontal leg 15 by means of a clamping plate 16 and a pair of clamping bolts 17 extending upwardly through holes provided in leg 15 and in laterally extending ears 16a in plate 16. Plate 16 is also provided with depending lugs 16b at its four corners which embrace the sides of shank 6 and leaf 7 to prevent them from twisting relative to the connecting clamp.

The drag bar 12 comprises a pair of beam members 18 arranged in spaced parallel relation to receive therebetween the vertical leg 14 of bracket 11. The leg 14 is adjustably connected to beam members 18 by an attaching bolt 21 and a clamping bolt 22. The attaching bolt 21 is disposed in aligned holes in beam members 18 and leg 14 and serves as a pivot upon which bracket 11 is turned to adjust it from one position to another. The clamping bolt 22 extends through holes in beam members 18 and through an arcuate slot 23 provided in vertical leg 14 and serves to clamp beam members 18 against leg 14 to hold bracket 11 in the desired position. The arcuate slot 23 is formed concentric with bolt 21 so that bracket 11 may be adjusted without removing bolt 22.

A break pin 25 is provided in vertical leg 14, to contact with the upper edges of beam members 18 and serves to assist in holding the bracket in the desired position. A plurality of holes 26 are provided in vertical leg 14 and are adapted to receive the break pin 25, the pin being inserted in the hole adjacent the upper edges of beam members 18.

The break pin 25 should be of sufficient strength to withstand the strain of normal operating conditions, which is occasioned in drawing tooth 5 through the soil, but which will shear when the tooth engages an unyielding object. This affords protection against breakage to spring tooth 5 and its associated parts. I find that an ordinary small cotter pin serves effectively for the break pin 25, and such is shown in the drawing.

The spring tooth 5 is usually spaced laterally from drag bar 12 and is mounted on horizontal leg 15 adjacent the end thereof. Due to the pressure of the soil on tooth 5 a considerable strain is directed to leg 15, which may at times become so excessive as to bend the leg causing tooth 5 to assume a tilted position. In order to strengthen bracket 11 so as to maintain tooth 5 in a proper position, an angle brace 28 is provided between drag bar 12 and tooth 5. The angle brace 28 comprises a horizontal leg 29 and a vertical leg 30. The horizontal leg 29 is secured to the top of clamping plate 16 by bolts 17 and vertical leg 30 is held in contact with the outer face of the adjacent beam 18 of drag bar 12 by attaching bolt 21. By reason of brace 28 being spaced appreciably from bracket 11, the two

together form somewhat of a bridge-like construction which is effective to resist distortion in all directions.

What I claim is:

1. In a cultivator, a drag bar comprising a pair of spaced beams, an L-shaped bracket having a vertical leg and a horizontal leg, the vertical leg being clamped between said beams and said horizontal leg extending laterally to one side of said drag bar, an L-shaped brace having a vertical leg fixed to the outer face of one of said beams and a horizontal leg extending laterally in parallel spaced relation to the horizontal leg of said bracket, a spring tooth having its upper end disposed between the outer ends of said horizontal legs, and means for rigidly clamping said spring tooth and said horizontal legs together, said means comprising a clamping plate disposed between one of said horizontal legs and said spring tooth and having a lug on each side engaging the sides of said spring tooth, and a pair of bolts disposed on opposite sides of said spring tooth and extending through aligned perforations in said horizontal legs and said clamping plate, said spaced horizontal legs forming a bridge-like construction for resisting distortion of the bracket.

2. In a cultivator, a drag bar comprising a beam, an L-shaped bracket having a vertical leg and a horizontal leg, the vertical leg being clamped to one side of said beam and said horizontal leg extending laterally to one side of said beam, an L-shaped brace having a vertical leg fixed to the opposite side of said beam and a horizontal leg extending laterally in parallel spaced relation to the horizontal leg of said bracket, a cultivating tool having its upper end disposed between the outer ends of said horizontal legs, and means for rigidly clamping said tool and said horizontal legs together including a clamping plate having lugs engaging the sides of said tool, said spaced horizontal legs with said clamping means forming a bridge-like construction for resisting distortion of the bracket.

3. In a cultivator, a drag bar comprising a beam, an L-shaped bracket having a vertical leg and a horizontal leg, the vertical leg being clamped to one side of said beam and said horizontal leg extending laterally to one side of said beam, an L-shaped brace having a vertical leg fixed to the other side of said beam and having a horizontal leg extending laterally in parallel spaced relation to the horizontal leg of said bracket, a cultivating tool having its upper end disposed between the outer ends of said horizontal legs, and means for rigidly clamping said tool and said horizontal legs together, said spaced horizontal legs with said clamping means forming a bridge-like construction for resisting distortion of the bracket.

4. In a cultivator, a drag bar comprising a beam, a ground engaging tool, a supporting bracket for said tool, a bolt extending through aligned holes in said beam and said bracket by which said bracket is pivotally connected to said beam, a second bolt extending through a hole in said beam and a slot in said bracket arcuate about said first bolt as a center, and a break pin disposed in a hole in said bracket and engaging said beam and cooperating with said bolts to prevent rotation of said bracket about said first bolt, but permitting such rotation when an obstruction is encountered by said tool.

THEODORE J. ERDMAN.

781

Jan. 28, 1936. I. H. NOELL ET AL 2,029,249

MOBILE GROUND WORKING DEVICE

Filed June 1, 1935 2 Sheets-Sheet 1

Fig. 1.

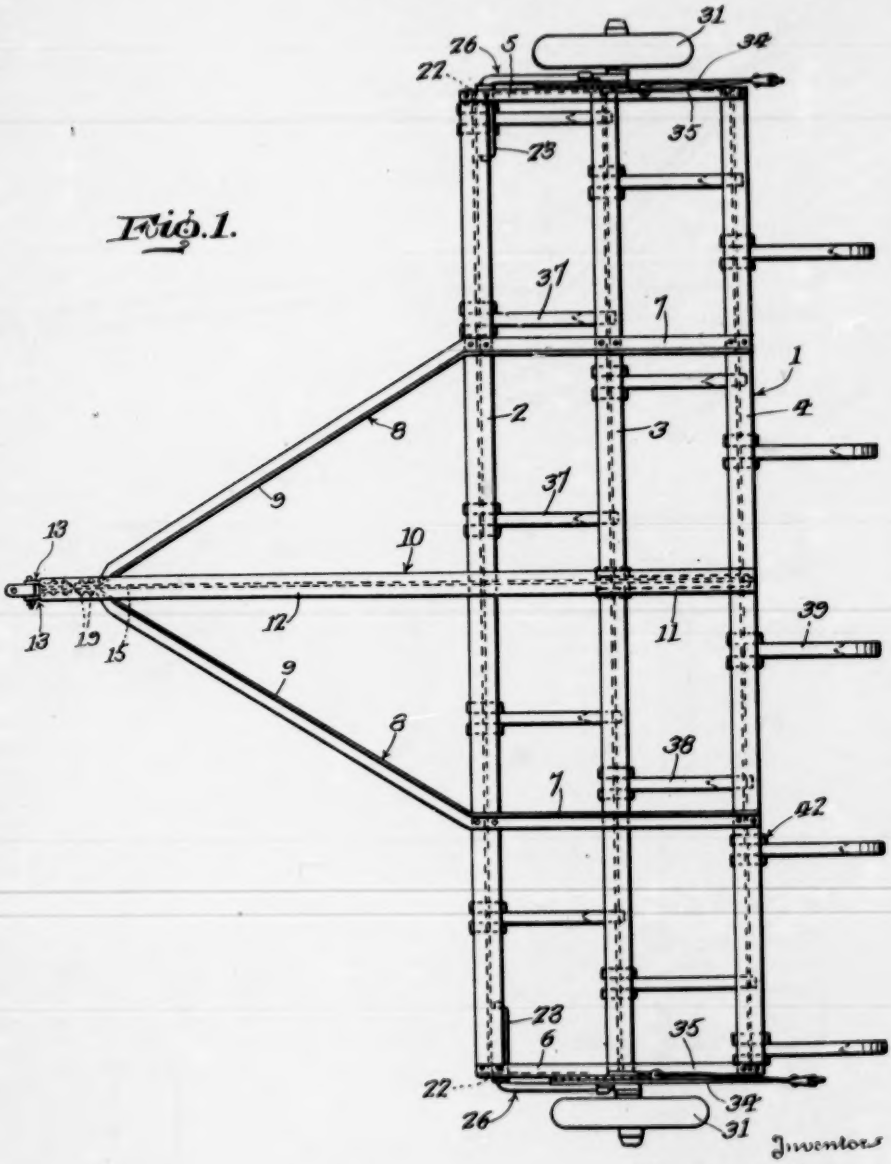


Inventors
Isome H. Noell
Fred W. Hoeme

By Geo. P. Kimmel
Attorney

783

Jan. 28, 1936. I. H. NOELL ET AL 2,029,249

MOBILE GROUND WORKING DEVICE

Filed June 1, 1935 2 Sheets-Sheet 2

Fig. 2.

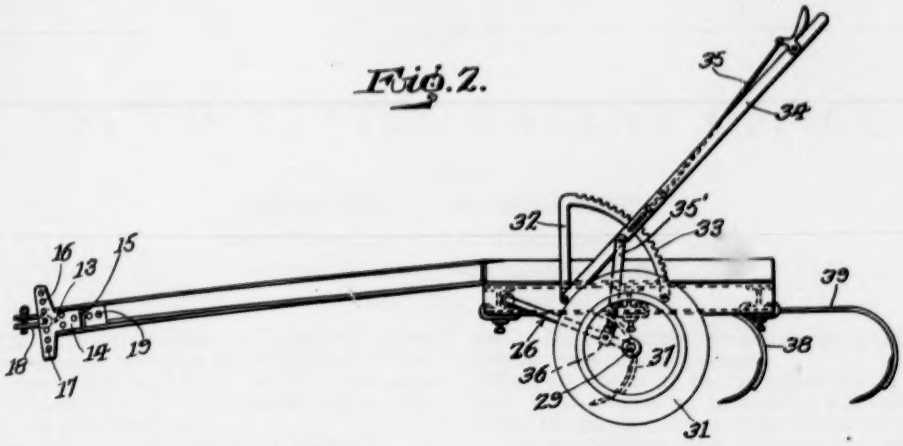


Fig. 3.

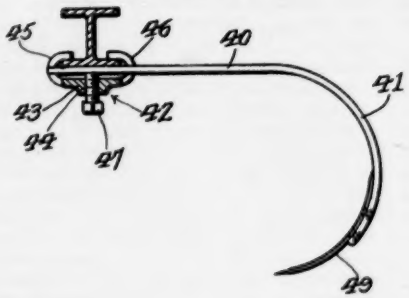


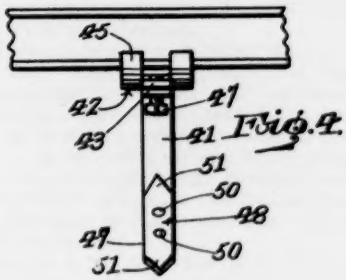


Fig. 4.

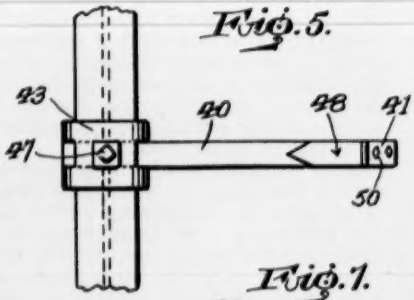


Fig. 5.

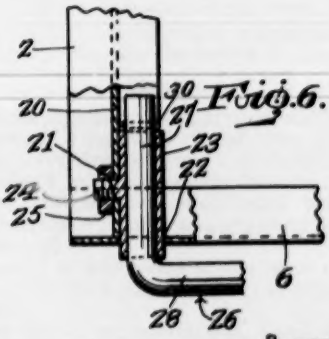


Fig. 6.

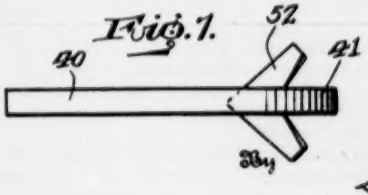


Fig. 7.

Inventors
Isome H. Noell
Fred W. Hoeme

By Geo. P. Kimmel
Attorney

Patented Jan. 28, 1936 2,029,249

785

# UNITED STATES PATENT OFFICE

2,029,249

## MOBILE GROUND WORKING DEVICE

Isome H. Noell and Fred W. Hoeme, Hooker, Okla.

Application June 1, 1935, Serial No. 24,553

1 Claim. (Cl. 97—198.1)

This invention relates to a mobile ground working device such as a shovel, plow or cultivator and is adapted for use in either preparing the ground for crop or cultivating and protecting crop after planting.

The object of the invention is to provide, in a manner as hereinafter set forth, a thoroughly efficient device of the class referred to for stirring, digging out and throwing up a moist and heavier sub-soil that is not eroded and dry to create a ridged surface of a corrugated nature to avoid wind erosion and to form a sub-surface to gather and preserve moisture; for acting upon the land to insure fertilization thereto and to provide a mixture of soils when the land is combined of sand loam surfaces, clay or similar subsurface soils; for mixing and stimulating the soils when the soils and sub-soils are of a like nature; for acting upon the land to create deep sub-surfaces and surface ridges to protect the land from soil erosion, either by wind or water.

A further object of the invention is to provide, in a manner as hereinafter set forth, a ground working device for efficient use on ordinary prairie land, wheat, corn, cotton or other row-crop where standard rows of crop are to be planted, or land prepared for planting or when cultivation of land is desired that is planted, or when cleaning, cultivating and weeding of growing crop is desired; as well as to cultivate, stir and ridge sub-soil and clean the ground; for throwing up spaced ridges on the surfaces of the field to prevent soil erosion, either by water or wind; and creating sub-surface furrows of any desired depth that tends to catch and attract drainage of surface moistures to be retained in such sub-surface furrows, thus preserving and checking the sub-drainage on flat or rolling land.

A further object of the invention is to provide, in a manner as hereinafter set forth, a device of the class referred to including a cushioned mobile structure provided with resilient curved beams for supporting and carrying the ground working tools.

A further object of the invention is to provide, in a manner as hereinafter set forth, a device of the class referred to including vertically adjustable traction wheels of the cushioned type for supporting the body or frame of the device to which the beams for the ground work tools are attached.

A further object of the invention is to provide, in a manner as hereinafter set forth, a device of the class referred to including a set of resilient beams carrying ground working tools and means for adjustably connecting the beams of each set to a support therefor.

Further objects of the invention are to provide, in a manner as hereinafter set forth, a device for the purpose set forth which is simple in its construction and arrangement, strong, durable, compact, thoroughly efficient in use for the purpose intended thereby, conveniently repaired, readily assembled and comparatively inexpensive to manufacture.

With the foregoing and other objects in view which may hereinafter appear, the invention consists of such parts and such combination of parts as will be specifically referred to and illustrated in the accompanying drawings, wherein is shown an embodiment of the invention, but it is to be understood that changes, variations and modifications may be resorted to which fall within the scope of the invention as claimed.

In the drawings:

Figure 1 is a top plan view of the device,

Figure 2 is a side elevation thereof,

Figure 3 is a side view of the form of resilient beam employed for carrying a ground work tool and further showing the means for clamping the beam to the body part of the device,

Figure 4 is a front elevation of the beam as anchored and carrying a ground working tool,

Figure 5 is an inverted plan view of the beam as anchored and carrying a grounding tool,

Figure 6 is a fragmentary view in plan illustrating the coupling connection between the traction wheel hanger and the body part of the device, and

Figure 7 is a top view of the beam having attached thereto a modified form of ground working tool.

The device includes a flat, rectangular body part 1 of frame-like form including front, intermediate and rear body bars 2, 3, 4 respectively and a pair of side bars 5, 6. The bars 2, 3, 4 are in the form of I-beams, of like length and are arranged in parallel spaced relation. As is well known, an I-beam includes two opposed spaced parallel pairs of oppositely extending flanges and a web, and with the web merging into the said pairs of flanges. The I-beams employed in the body part 1 are disposed to provide a pair of oppositely extending flanges at their tops and bottoms. The bars 5, 6 are in the form of channel irons, overlap the top and bottom of, are suitably connected to and are of less length than that of bars 2, 3, 4.

Mounted upon the bars 2, 3, 4, between the transverse median and each end thereof, is the

rear part 7 of an angle bar 8. The forward part of the latter, indicated at 9, extends at an inclination towards the transverse median of body part 1. The bars 8 are oppositely disposed. The bars 8 are suitably secured to the top of body part 1. The bars 8 brace body part 1 and also act as bracing means for a hitch 10 consisting of a rear part 11 and a forward part 12. The hitch 10 is in the form of an I-beam. The part 11 is mounted upon and suitably secured to the body part 1 at the transverse median of the latter. The forward part 12 of hitch 10 is disposed at a downward inclination (Figure 2) with respect to rear part 11 and has arranged at and extending forwardly from its outer end a pair of parallel apertured spaced T-shaped members 13. The stems 14 of members 13 are arranged against opposite sides of and secured to the web 15 of hitch 10. The heads 16 of members 13 have superposed aligning apertures 17 for adjustably connecting thereto a clevis 18. The forward ends of the parts 9 of the bars 8 are secured to opposite sides of and in proximity to the forward end of web 15 by the holdfast means 19.

The web of bar 2 is indicated at 20 and is provided, in proximity to each end thereof, with an opening 21. Only one of the openings 20 is shown and in this connection see Figure 6. The bars 5, 6, in proximity to their forward ends, are provided with openings 22. Arranged against the rear face of web 20 are spaced endwise aligning sleeves 23 which project from the ends of bar 2. The sleeves 23 are formed with forwardly extending peripherally threaded protuberances 24, only one shown, which pass through openings 21 in web 20. Engaging with the protuberances 24 and abutting web 20 are securing nuts 25 which clamp sleeves 23 against web 20. The sleeves 23 provide bearings for oppositely disposed wheel hanger 26 of like form. Each hanger includes a horizontally disposed inner arm 27 and a rearwardly directed downwardly inclined outer arm 28 terminating in an outwardly directed axle or spindle 29 disposed at right angles to arm 28. The arms 27 are rotatably mounted in and are of greater length than that of the sleeves 23. The arms 27, in proximity to their inner ends, carry stop pins 30 disposed diametrically and extending laterally in opposite directions therefrom. The pins 30 coact with the inner ends of sleeves 23 for coupling the hangers 26 to the body part 1. Mounted on the axles or spindles 29 are traction wheels 31 of the cushioned tired type. The wheels 31 are retained on the axles 29 by any suitable means.

The arms 27 of the hangers 26 are vertically adjustable for the purpose of elevating and lowering the wheels 31 to vary the distance between body part 1 and the ground. The arms 27, when adjusted, are latched in such position with body part 1. For this purpose the side bars 5, 6 have secured thereto the lower ends of vertically disposed bars 32 terminating at their upper ends into rearwardly extending upstanding quadrant-shaped racks 33 anchored at their lower ends to bars 5, 6. Pivotally mounted at their lower ends, upon the securing means for the bars 32, are upstanding rearwardly extending adjustable hand levers 34 carrying pawl and lever mechanisms 35 for coaction with the racks 33 for the purpose of latching levers 34 in adjusted position. Pivotally connected to the levers 34 are the upper ends of depending links 35' which are pivotally connected at their lower ends to yokes 36 fixed to the arms 27.

Adjustably connected to the bars 2, 3, 4 are sets 37, 38, 39 respectively of rearwardly directed lengthwise adjustable resilient beams or tool standards. Each beam is of like form and consists of a resilient strap of metallic material formed of a horizontal disposed straight upper part 40 terminating into a depending rear part 41 of arcuate curvature. The beams of a leading set are staggered with respect to the beams of a follower set. A clamping device 42 is employed for connecting the forward end terminal portion of the part 40 of a beam to a body bar 2, 3 or 4 and which may be positioned at any desired point lengthwise of the bar. Each clamping device 42 includes a base 43 having an axially arranged vertically disposed threaded opening 44, a pair of spaced horizontally disposed semi-oval shaped clamping arms 45 at the front of the base 43, a pair of spaced horizontally disposed semi-oval shaped clamping arms 46 at the rear of the base 43, and a vertically adjustable clamping screw 47 engaging with the wall of opening 44. The base 43 is in the form of a rectangular plate having its lengthwise edges aligned with the lengthwise edges of the base flanges of a body bar. The arms 45 are directed forwardly with respect to base 43 and the forward base flange of a body bar and then rearwardly inturned to overlap such flange. The arms 45 are directed rearwardly with respect to base 43 and the rearward base flange of a body bar and then forwardly inturned to overlap the said rear base flange. The upper portion of the arms 45 are oppositely disposed with respect to the upper portion of the arms 46, that is to say, the upper portion of the arms 45 extend rearwardly and the upper portion of the arms 46 extend forwardly. When a beam is secured to a bar 2, 3 or 4, the forward end of the upper part 40 of the beam is passed between the arms of the pairs of clamping arms and positioned between base 43 and bottom of the body bar. This arrangement of beam is had after the clamping device has been mounted upon the oppositely extending base flanges of the body bar. When part 40 has been arranged in the position stated, the clamping screw 47 is screwed home whereby the beam is tightly clamped against the lower face of the body bar, and in this connection reference is had to Figure 3.

The ground working tools shown in Figures 1 to 5 are of the same construction and indicated at 48. Each tool 48 performs a plowing function and is formed from a strap 49 of metallic material corresponding in width to that of part 41 of a beam. The strap 49 is of arcuate curvature and has its upper portion seated against the lower portion of the forward face of part 41. The lower portion of strap 49 extends forwardly from the lower end of part 41. The strap 49 is secured to part 41 by countersunk holdfast means 50. The upper and lower ends of strap 49 are tapered, as at 51.

Sweeps 52 (Figure 7) may be attached to the beams 37, 38, 39 instead of shovels, plows or diggers for use in shallow work, weeding, etc.

The adjustable spring beams to which the ground working tools are attached are such that either end of the plow may be used. The spring beams are adjustable forward and rearward in the clamps according to the soil being worked—the full length extension being more desirable and practical in hard or tight land and the shorter adjustment being best suitable for light or loose soil (ordinarily such principle would be the reverse with any other kind of plow) as the long adjust-

ments permit individual position of the tool in hard ground when contacting sub-surface rocks, harder streaks of dirt, etc., causing each to rise slightly, shift and dodge in the contact of such objects without in any way interferring with the other spring beams and tools by reason of the quality of steel in the beams, the heavy balanced weight of the frame and the submerged tools on the other spring beams in the soil, thus the whole prevents any side draft of the whole machine. Experience in economy of operation shows ground can be gone over with this set of tools as much as three times at the same expense of once over with the common one-way plow now in use in the Western country, being only a surface plow.

Each clamping arm is an integral continuation of a side edge of the base 43. Each clamping arm includes a lower stretch which merges at its inner end into an edge of the base 43 and merges at its outer end into the lower end of an upstanding inwardly directed curved bend. The upper end of the bend merges into the outer end of an inwardly extending upper stretch overlapping and slidable upon a base flange. The inner edges of the bends of each pair of arms provide abutments for the edges of the upper end terminal portion of the beam carrying the ground working tool.

What we claim is:

In a ground working device, a mobile I-beam, a resilient beam having a horizontally disposed part and a part depending from the rear end of the horizontally disposed part for carrying a ground working tool, said horizontal part extending rearwardly from said I-beam and having a portion thereof positioned transversely of the bottom of the I-beam, a base member arranged against the lower face of the said portion and being formed with a vertically disposed opening having a threaded wall, oppositely disposed upstanding clamping means at the front and rear of said base member and overlapping the lengthwise edges of the base flanges of said I-beam, and adjustable means threadedly engaging with the wall of said opening, abutting said portion and coacting with said clamping means for clamping said horizontal part against the bottom flanges of the I-beam, the said clamping means at the front and at the rear of said base member being in the form of a pair of spaced parallel curved arms of like form, the inner side edges of the arms of each pair abutting the lengthwise edges of said horizontal part.

ISOME H. NOELL.
FRED W. HOEME.

789

Department of Patents.
Patents Act 1903-1921.
Commonwealth of Australia.

**No. 1056/26.**

APPLICATION DATED
19th March, 1926.

LIBRARY JUN 15 1927 PATENT OFFICE

*Applicant (Actual Inventor)* ... ... RUSSELL PRIOR.
*Application and Provisional Specification* ... Lodged 19th March, 1926.
*Application and Provisional Specification* ... Accepted 9th April, 1926.
*Complete Specification* ... ... ... Lodged 18th December, 1926.
*Complete Specification Accepted* 19th *Mar.*, 1927 Acceptance Advertised (Sec. 50) 29 Mar., 1927

**Class 30.9.**

*Drawing attached.*

## COMPLETE SPECIFICATION.

### "Stump jump mechanism for cultivating implements."

I, RUSSELL PRIOR, of 73 Schutt Street, Newport, near Melbourne, in the State of Victoria, Commonwealth of Australia, Agricultural Implement Maker, hereby declare this invention and the manner in which it is to be performed to be fully described and ascertained in and by the following statement:—

This invention relates to stump jump mechanism for cultivating implements and has been devised in order to provide mechanism for this purpose which is of greater utility than that at present in use.

The invention is specially applicable to the stump jump tynes of a combined cultivator and seed drill and has for its object the provision of cheap, simple and efficient mechanism, the tyne being so connected that a rigid or stump jump connection can be effected in a rapid manner.

The essential features embodied in the invention are as follow:—

1. Means whereby the tyne can be rapidly interchanged from stump jump to rigid or vice versa in a rapid and convenient manner.

2. The provision of a guide block mounted on the shaft to form a guide for the tyne in its stump jumping movement.

3. The provision of means for permitting the adjustment of the tyne.



C.4661.—7/4/27.—100.—Price, 1s. 6d. post free.

4. The arrangement of a substantially long adjusting or set screw adapted to bear against the washer or cap at the top of the spring to enable the set screw on adjustment to bear on the spring to force it down into extreme compression to form a substantially rigid connection for interchanging the mechanism from stump jump to rigid, the screw also functioning to increase or decrease the spring pressure on the tyne.

5. The arrangement of the spring connections so that they are readily detachable to allow a solid block to replace said spring for the purpose of interchanging from stump jump to a rigid fitting.

In order to more readily understand the invention reference will now be made to the accompanying drawings in which:—

Figure 1 is a view in side elevation of the invention.

Figure 2 is an end elevation thereof, and

Figure 3 is a front elevation.

According to this invention the usual transverse squared shaft 5 is passed through a plurality of blocks 6 preferably of cast or mild steel, each block being adapted to form a tyne support.

Each block 6 is preferably set adjustably on the square shaft 5 by set screws 7 which pass through a short bar 8, and at its forward end in front of and below the squared

shaft the block 6 is formed to receive the pivot pin or bolt 9 of the tyne 10.

The tyne 10 is bent loosely around the pivot pin or bolt 9 and is suitably returned as at 11, thus strengthening the tyne 10 at this point.

The tyne 10 from the pivot 9 extends rearwards and downwardly at an angle and curves away from the block 5 towards the ground level 12 in the usual way and is fitted with a hoe 13.

Each block 5 is constructed to form a guide for the vertical movement of the tyne 10 in its stump jumping movement, and at the rear 14 below the normal level of the tyne a rest pin 15 is fitted to limit the downward movement of the tyne 10.

Each block 5 is adapted to receive a spiral spring 16, the upper end of which is provided with a cap or washer 17 against which a set screw 18 passing through a plate 19 held between bolts 20 is adapted to bear, thus providing means for varying the tension on the spring 16 and consequently the flexbility of the tyne 10.

The lower end of the spring is received by a stud 21 on the tyne 10 on its up-and-down movement, so ensuring that the spring 16 is always in a vertical or approximately vertical position.

Holes 22 are provided in the plates forming the guide 5, said holes being adapted to receive pins which support the tyne 10 and by this means the tyne is raised or lowered at its pivot, thus enabling the hoe 13 to meet the ground at the desired angle.

When it is desired to make a rigid tyne fitting the set screw 18 can be screwed down hard on the spring 16, the coils of which would seat one on the other pressing the tyne 10 down on the rest pin 15 and so make a rigid connection and prevent the vertical movement of the tyne 10.

Alternately the spring 16 can be readily removed and a rigid block or bar can be suitably disposed between the bar 19 and the tyne 10.

Having now fully described and ascertained my said invention and the manner in which it is to be performed, I declare that what I claim is:—

1. Stump jump mechanism for cultivating implements characterized by the use of a guide member adjustably positioned on a bar, said guide member receiving a tyne which is pivotted between plates forming said guide, means for permitting the vertical rising of the tyne, means for preventing said tyne falling below a predetermined position and means for maintaining said tyne normally in contact with the ground.

2. Stump jump mechanism for cultivating implements comprising spaced plates forming a guide for a pivotted tyne, a slot in said plates adapted to receive a squared bar, a stop beneath the tyne, a spring above the tyne and below a bar retained in the plates by bolts or the like, a set screw passing through said plate and engaging with the spring, holes in the plates to receive pins for adjusting the tyne, the whole being arranged and operating as herein set forth.

Dated this 18th day of December, A.D. 1926.

SIDNEY HENDLEY,
Patent Attorney for Applicant.

Witness—Amy F. Uhlhorn.



Printed and Published for the DEPARTMENT OF PATENTS, COMMONWEALTH OF AUSTRALIA, by H. J. GREEN, Government Printer for the State of Victoria.

19 Mar., 1926. AUSTRALIA. No. 1056/26.

RUSSELL PRIOR.

*Stump Jump Mechanism.*

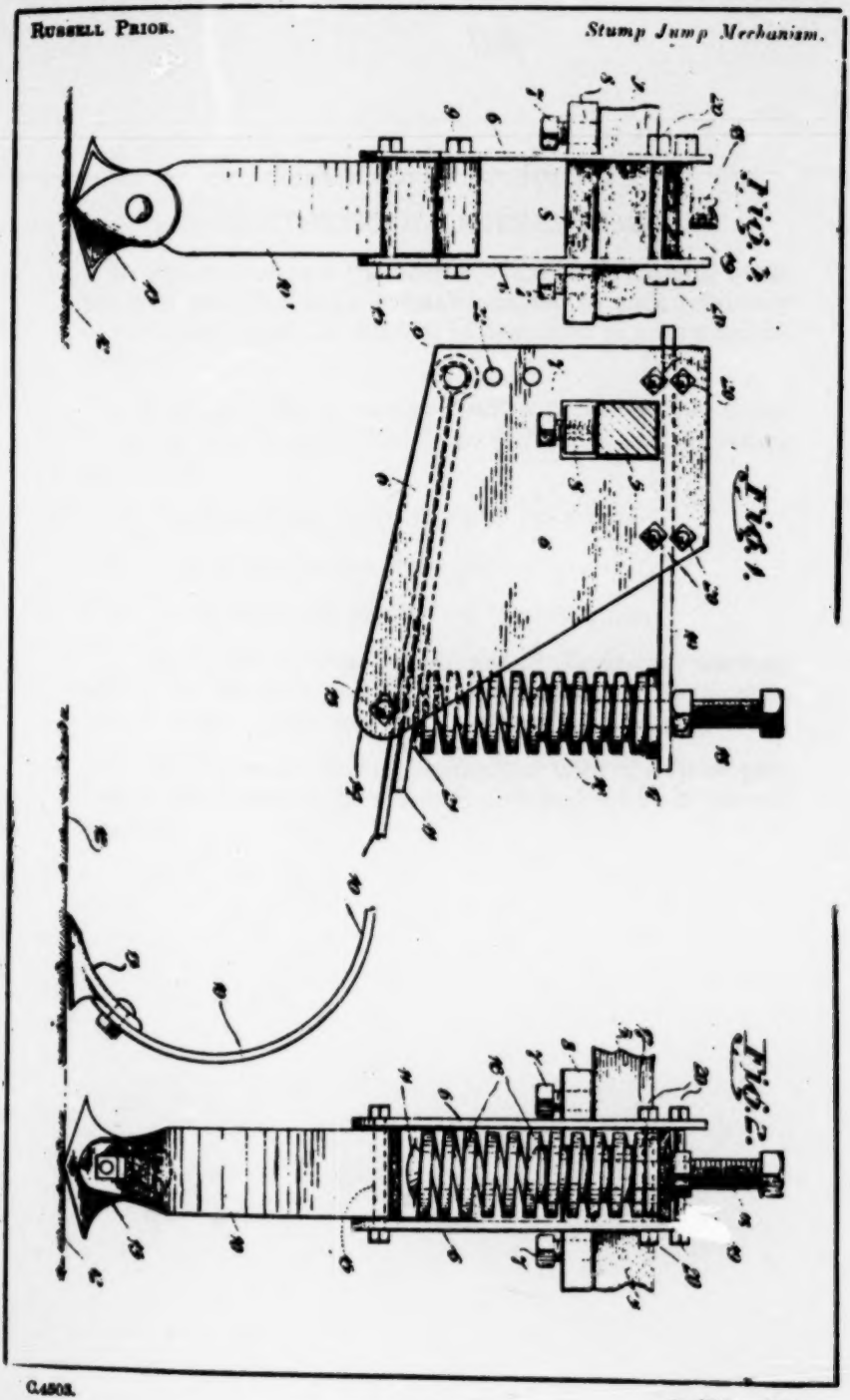


C.4503.

One litho. sheet.

## DEFENDANT'S EXHIBIT 7

## HYPOTHETICAL GENERAL CLAIM

In a plow having a transverse frame and a ground working tool provided with a shank adapted to rock relatively to the frame when the plow is in operation in a forward direction,

a mounting for attaching and supporting the shank of the ground working tool from the frame, said mounting including

1. a part adapted to be fixed to the frame,

2. a pivot pin on the fixed part,

3. a movable part pivoted on the pivot pin,

4. means for attaching the shank of the ground working tool to the movable part so that the shank and the movable part will pivot together around the pivot pin, and

5. spring means having connection with the fixed part and shank to permit the shank to rock and return to normal position.

## DEFENDANT'S EXHIBIT 8A

## CLAIM 1 FROM 798 FILE WRAPPER

In a plow having a frame and a ground working tool provided with a shank adapted to rock relatively to the frame when the plow is in operation in a forward direction,

a mounting for attaching and supporting the shank of the ground working tool from the frame including

1. a part adapted to be fixed to the frame, and

2. a part pivotally mounted on the fixed part and having a plate portion extending forwardly from said pivotal mounting along an end portion of the shank and in movable engagement with the fixed part,
means on the pivotal part embracing the end portion of the shank, and

3. resilent means interconnecting said parts and engaging the end portion of the shank to hold the pivotal part in yielding contact with the fixed part so that when the shank is rocked the end portion of the shank will cause the pivotal part to move away from the fixed part along said end portion of the shank and back to normal position with said plate portion in contact with the fixed part

## DEFENDANT'S EXHIBIT 8D

## CLAIM 7 FROM THE 798 FILE HISTORY

In a plow having a frame and a ground working tool provided with a shank adapted to rock relatively to the frame when the plow is in operation in a forward direction,

a mounting for attaching and supporting the shank of the ground working tool from the frame including

1. a part adapted to be fixed to the frame and having

   a. spaced apart depending flanges to from a downwardly opening way to receive an end portion of the shank and having

   b. spaced apart ears extending rearwardly in substantially aligning registry with said flanges,

2. said mounting also including a movable part having

   a. a transverse ear between said spaced apart ears of the fixed part and having

   b. a shank engaging portion extending in said way,

3. a pivot pin extending through said spaced and transverse ears for pivotally connecting the movable part with the fixed part,

4. means connecting the end portion of the shank to the shank attaching portion, and

5. resilient means connecting said parts to hold the movable part in yielding contact with the fixed part so that when the shank is rocked the end portion of the shank will cause the movable part to move downwardly within said way along with said end portion of the shank and back to contact with the fixed part.

# United States Court of Appeals

FOR THE EIGHTH CIRCUIT.

## No. 17,441.

CIVIL.

JOHN DEERE COMPANY OF KANSAS CITY,
a Corporation and DEERE & COMPANY,
a Corporation,
*Appellants,*

vs.

WILLIAM T. GRAHAM, and GRAHAM PLOW, INC.,
*Appellees.*

APPEAL FROM THE DISTRICT COURT OF THE UNITED STATES
FOR THE WESTERN DISTRICT OF MISSOURI,
WESTERN DIVISION.

INDEX

Volume IV—Exhibits

Defendants' Exhibit 30, "No. 600 Tool Carrier Survey" by E. H. Lee, March, 1953, Product Research Department Copy ..... 799
Defendants' Exhibit 31, "No. 600 Tool Carrier Survey" by E. H. Lee, April, 1953, Product Research Department Copy 823
Defendants' Exhibit 32, Correspondence Produced During the Taking of Depositions of the Employees at Moline, Illinois, of Deere & Company ..... 844

Defendants' Exhibit 33-A, Drawing XCA-318-N ..... 877
Defendants' Exhibit 33-B, Drawing XCA-318 ..... 879
Defendants' Exhibit 34-A, Drawing Attached to Letter of October 23, 1953, Part of Correspondence with Exhibit 32 ... 881
Defendants' Exhibit 34-B, Another Drawing Attached to Same Letter ..... 883
Defendants' Exhibit 38, Drawing XCL-134-N ..... 885
Defendants' Exhibit 39, Drawing XCL-135-N ..... 887
Defendants' Exhibit 41, Drawing Attached to Letter in Correspondence, Letter Being Dated December 8, 1953 ..... 889
Defendants' Exhibit 44, Copy of the Hunter Patent, No. 2,777,378 ..... 891
Defendants' Exhibit No. 45-A, Drawing of the Fixed Member 895
Defendants' Exhibit No. 45-B, Drawing of the Pivoted Member 897
Defendants' Exhibit 46, Drawing of Final Production Model of the 100 Series ..... 899
Defendants' Exhibit 52-A, Photograph of a Part of the Test Setup ..... 901
Defendants' Exhibit 52-B, Photograph of a Part of the Test Setup ..... 901
Defendants' Exhibit 52-C, Photograph of a Part of the Test Setup ..... 903
Defendants' Exhibit 52-D, Photograph of a Part of the Test Setup ..... 903
Defendants' Exhibit 53, Judge Dooley's Letter Opinion Dated September 9, 1953, in Civil Action No. 1469 in the United States District Court for the Northern District of Texas, Amarillo Division, Styled Jeoffroy Manufacturing, Inc., v. Graham ..... 905
Defendants' Exhibit 54, Judge Dooley's Letter Opinion to Counsel in the Same Case Dated December 18, 1953 ..... 916

DEFENDANTS' EXHIBIT 30

Mar.30,'53
E.H.L.

ROUTE TO
~~K.W.A.~~
~~R.M.W.~~
~~E.H.L.~~
~~C.L.S.~~
M.H.E.
~~Chairman~~

# NO.600 TOOL CARRIER SURVEY
## KANSAS CITY BRANCH
## March 9-19, 1953.

The writer traveled alternately with Messrs. Sheier, Waln and Wilson of the Kansas City Branch to interview John Deere Dealers in regard to field cultivators of the Graham-Hoeme, and John Deere 600 tool carrier-type. The main objective was to determine if the No.600 tool carrier is the right design to compete with Graham-Hoeme or Jeoffrey.

Comments

1. It was the opinion of every dealer contacted that the square bar design used on the No.600 tool bar cultivator is the right direction to go to compete with Graham-Hoeme because -

a. The square bar design accommodates a variety of equipment. The square bar type machine should do everything that the Hoeme I Beam design will do in regard to chisel and sweep sizes and patterns, also lend itself better to the mounting of planting attachments for maize and equipment for cultivation of row crops like maize.

b. Vertical ground clearance is greater with the No.600 tool carrier design.

c. Machine provided with power lift or Powr-Trol.

d. Strength equal to or greater than Hoeme. Weight is adequate.

e. Choice of spring or stiff standards to take the 2 inch chisel or swoep up to 18 inch, also breakaway standard with 30 inch sweep. Recently the PA-300 Series planting attachments have been made available.

f. Price of the basic carrier (16 ft. $305.00) is somewhat lower than Hoeme, less tool equipment.

2. It was generally stated that the following improvements in the 600 Series tool bar are necessary to make this multi-purpose machine more competitive to Graham-Hoeme and Jeoffrey machines now in the field, also to the recently introduced Minneapolis-Moline double bar UniTiller.

a. Provide wheel rims to use 15 inch tires.

b. Provide lateral adjustment of wheels. Our present welded bracket and wheel hanger design does not facilitate lateral adjustment which is necessary to permit -

1a) A greater choice of tooth patterns for various sizes of sweep equipment. For example, proper spacing of 30 inch sweeps is not presently possible around the wheels, also if a few deep penetrating chisels are used, one wheel always runs in worked soil. Some owners would like to locate 30 inch sweep on 24 inch centers.

1b( If planting attachments are used, the request for row spacings from 24 to 42 inches exists. Generally this spacing is 28 or 30 inches.

1c (Some owners would like to cultivate the middle of row crops.

2 - Continued

c. As the 600 tool bars have not been used appreciably as yet this spring, the improved power lift could not be judged from field use. Trouble still exists in getting the wheel hubs to match the axles - this requires shopwork to correct.

d. Lower cost planting attachments are necessary. The selling price of $105 per unit is high when comparing the Minneapolis-Moline planting attachment which is 8 row complete at $307.50. The Minneapolis-Moline is of cheap construction and uses a fluted feed. A plate feed is desirable, and somewhat better construction of cans and tubes is also necessary. Volume potential does not warrant a new type of planting attachment. Transport wheel drive and cheaper opener equipment may help on price.

e. The wheels should be relocated for better fore and aft balance, especially on the power-lift machines. Weight on the drawbar is prohibitive on power lift machines. A jack is not necessarily the solution.

f. Provide a folding or detachable hitch to permit assembly of machines at the dealer's store. At present the 16 ft. machines are too wide for highway transport and too long to be loaded on trucks for delivery to farms.

3. The new stiff standards and line of sweeps and chisels have been slow in reaching dealers. They are now arriving in limited numbers. The coil tooth has not been satisfactory because of uneven operation. Where the majority of No.600 carriers have been sold the equipment has been breakaway standard and 30 inch sweeps.

4. The new double-bar Minneapolis-Moline UniTiller which has appeared on the territory this year uses a clamp design for frame attaching bars which permits lateral adjustment of wheels and a nearly unlimited variety of tooth patterns. This type of construction is very popular and would be to our advantage if adopted. Folder is enclosed. List price with tires is 18½-inch double bar $325.20.

5. Consideration should be given in future design to a safety release for stiff standards to take care of rocks or obstructions. The areas of use of the No.600 carrier in the Kansas City Branch territory do not contain an appreciable number of rocks or stumps, however, we already have a report from Limon, Colorado, where a clamp for the new stiff standard has failed due to encountering frost. This farmer was chiseling early to stop wind erosion.

6. It is not expected that if the recommended revisions are made in our No.600 tool carrier that we will immediately take over the Graham-Hoeme and Jeoffrey business, as they are well established, have a good general reputation and have been selling their implements with practically no competition for nearly ten years. Some areas average one Hoeme or Jeoffrey machine per farm. Mulch farming is slowly but surely gaining in practice. Our square bar type high clearance machine with the variety of tool equipment, especially the 30 inch sweeps, will fit into mulch farming better than the Hoeme type machine. The addition of planting equipment of a suitable type will also be to our advantage. If we watch this field closely we should work up a very attractive volume.

7. Kansas City were shipped a total of 319 No.600 Series cultivators from November 1,1951, to October 31, 1952. They received 111 machines from November 1, 1952 to February 28, 1953. Total 430 machines.

E. H. Lee - Product Research.

Mar.27,1953
E.H.L.

## NO.600 TOOL CARRIERS

### Points Visited

| Town | Dealer | Number Delivered To Date | No. On Hand | Comments |
|---|---|---|---|---|
| Salina, Kansas | Salina Impt.Co. | 2 | 4 | Square bar design right. Strength weight O.K. Has not had new stiff standards. This has held up sales. Wheel spacing should be adjustable for deep chiseling. |
| Russell, Kansas | Mahoney Impt.Co. | 1 | 1 | Coil tooth standards not right type. Had power lift trouble. Square bar idea good. This is not big cult. territory. |
| Hays, Kansas | Adam Rupp | 1 (transferred) | Has not 1 | had new stiff standard. None sold. Hoeme selling small sizes. |
| LaCrosse, Kansas | L.& W.Impt.Co. | 0 | 3 | Balance off on power lift model. Need adjustable wheels. Has not had new stiff standards. Hoeme not selling so many. Should have 10-12-14-16 foot sizes. |
| Kingman, Kansas | Kingman Impt.Co. | 1 | 0 | Country filled with Hoeme. The one sold went to Burlington, Colorado. Need stiff standard and sweeps. |
| Pratt, Kansas | Robinson Impt.Co. | 1 | 0 | Sold one two weeks ago, reaction unknown. Coil spring standards o.k. here. Believes we are on right track with square bar. Wants seven planting attachments for maize on 16 ft.bar. Need adjustable wheel spacing. |
| Bucklin, Kansas | Ralph Estes | 1 | 1 | 600 bar looks better to him than Hoeme for strength. Just received new stiff standard. Wants adjustable wheels. Ordered 30 inch sweeps. |
| Liberal, Kansas | Davis Impt.Co. | 0 | 1 | Just received. Need chisel point stiff standards. |
| Perryton, Texas | Perryton Impt.Co. | 0 | 3 | Believes tool bar has lots of possibilities. Drawbar too heavy. Need adjustable wheels. Just received stiff standards, chisels and sweeps. Few Hoeme sold anymore. Want five planting adjustments per bar. Tillers have taken over much of this territory. |
| Guymon, Oklahoma | Orville Nash | 0 | 1 | Has five 600 bars sold, has 11 coming in first carload. This implement has definite promise to go here. Dealer believes should sell from Plainview,Texas, to Canadian border. Wants 30 inch sweeps. Is now putting them on Hoeme. Wants adjustable wheel tread for seven 30 inch sweeps on 24 inch centers. Wants planting attach bar for maize - 15 inch wheels. This dealer has sold an average of one Hoeme to each farm in the county. |
| Garden City, Kansas | A.L.Gottschalk | 3 | 0 | All power lift which has given trouble. Too much weight on drawbar. Should have raising or detachable drawbar. Tool bar design right for future business because of multitude of attaching tools possible. Need adjustable wheels for planting and cultivating maize. |
| Dodge City, Kansas | Stanley Urbom | 2 | 1 | Wants adjustable wheels, planting equipment, better power lift. Need a design like M.M.UniTiller. Want plate type boxes. Will use both stiff standard and coil teeth. |

| own | Dealer | Number Delivered To Date | Now on Hand | Comments |
|---|---|---|---|---|
| reat Bend, Kansas | Alefs & Sons | 1 | 1 | Not Cultivator country. Used coil spring standards. |
| yracuse, Kansas | Gould Impt.Co. | 25 | 6 | Most with 30 inch sweeps. Likes new stiff standards. Wants planting attachment bad. Drawbar too heavy. Had power lift trouble. Wheel hubs not match the axle. Believes square bar direction to go. Has Hoeme contract, believes 600 better because of tool equipment and clearance. |
| olly, Colorado | Romer Mercantile Company | 12 | 0 | Had trouble with power lift and wheel hubs. Like new tool equipment. Needs planting attachment, and wheel adjustment. Believes Minn-Moline UniTiller clamp design should be incorporated for more possibilities in tool mounting. Like square bar design. |
| amar, Colorado | W.R.Henry | 2 | 0 | Used 30 inch sweep. Wants adjustable wheel tread, planting attachments. This is broom corn area, 600 to be used for cultivation. Drawbar too heavy and long. Had power lift and wheel hub trouble. |
| ribune, Kansas | Mr. Smith | 0 | 2 | Cannot mount 30 inch sweeps in proper pattern. Wants adjustable wheels and planting attachments. Likes square bar, believes will sell. Fewer Hoeme and Jeoffrey sold. |
| ads, Colorado | Mr. Koch | 1 | 2 | Likes 30 inch sweep for mulch farming. Believes new stiff standard with chisels and sweep will be sold more this year. Believes square bar the direction to go because of clearance and equipment. Wants adjustable wheels. Needs maize planting attachment. |
| imon, Colorado | Mr. Waithman | 4 | 0 | On right design with square bar. It is a matter of time until the square bar catches on. Likes coil teeth and new stiff standards. Broke one clamp on new stiff tooth, could use drill box with damming lister openers. |
| lagler, Colorado | Blanchen Impt.Co. | 5 | 2 | Some sold without standards-customers buy Minn-Moline.Likes new stiff standards,also 30 inch sweeps. Wheels should be adjustable. Need spacing pattern information. |
| urlington, Colorado | Mr. MacArthur | 0 | 6 | Need new stiff standard and sweeps.Believes square bar principle right. Wheel adjustment needed. |
| oodland, Colorado | Mr. McKenzie | 5 | 0 | Likes square bar design. Needs sweep pattern information. Uses 30 inch sweeps in summer fallow. Had bar end bending last year. |
| akley, Kansas | Nelson Impt.Co. | 5 | 6 | Inventory will move when stiff standards are received. Could use planting attachment. Will run into trouble on wheel spacing. PA-300 too high priced. Hoeme and Jeoffrey selling good. When dust starts to blow farmers will buy anything. |
| olby, Kansas | John Molstad | 0 | 6 | Believes square bar design right because of tool possibilities. Will sell when stiff standards arrive. Need planting attach. |
| cott City, Kansas | Don Cox | 1 | 3 | Coil teeth not satisfactory because of dodging around. Stiff teeth expected to be O.K. 30-inch sweeps will not penetrate. Square bar design makes good competition for Hoeme. |

Mar.27,1953
E.H.L.

GUYMON, OKLAHOMA
March 12,1953

In an effort to bolster sales of 600 tool carriers, 30 inch sweep equipment, and to take advantage of the trend to mulch farming in this area, dealer Oliver Nash has made adapter parts to mount our 30 inch sweeps on Hoeme cultivators. As a result he has already sold five 600 carriers and has orders for approximately 300 sets of 30" sweeps. The following pictures show the sweep ready to mount on Hoeme cultivators and field scenes of the job performed.

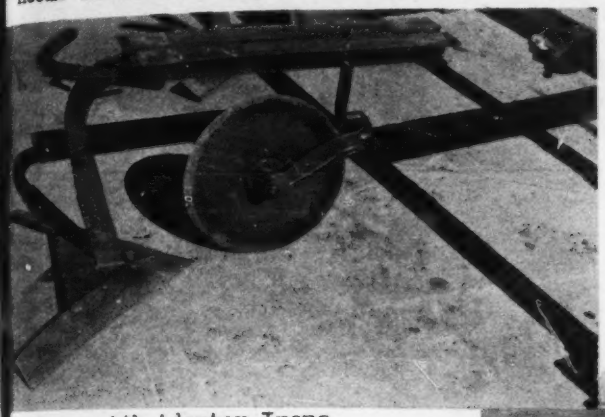

Sweep with Adapter Irons.

Mounting on Hoeme Cultivator.

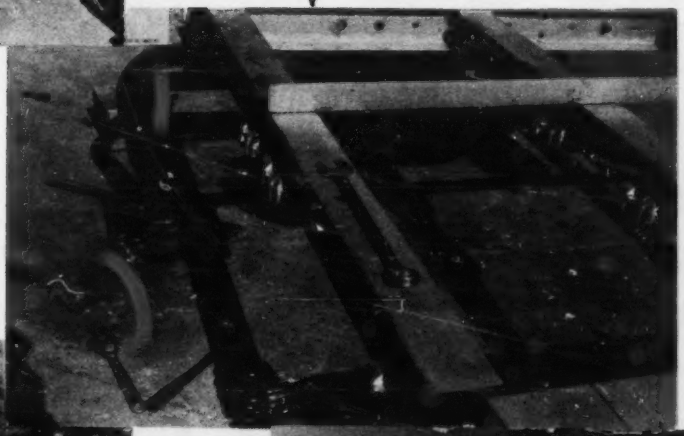

Job performed in sod.

Job performed in stubble, first time over.

# SUPREME COURT OF THE UNITED STATES

**OCTOBER TERM, ~~1964~~ 1965**

## No. ~~530~~ //

---

WILLIAM T. GRAHAM, ET AL., PETITIONERS,

*vs.*

JOHN DEERE COMPANY OF KANSAS CITY, ET AL.

---

**ON WRIT OF CERTIORARI TO THE UNITED STATES COURT OF APPEALS FOR THE EIGHTH CIRCUIT**

---

## INDEX


| | Original | Print |
|---|---|---|
| Proceedings in the United States Court of Appeals for the Eighth Circuit | 923 | 923 |
| Opinion, Matthes, J. | 923 | 923 |
| Judgment | 936 | 934 |
| Petition for rehearing | 937 | 935 |
| Order denying petition for rehearing | 943 | 939 |
| Clerk's certificate (omitted in printing) | 944 | 940 |
| Order allowing certiorari | 945 | 940 |


RECORD PRESS, PRINTERS, NEW YORK, N. Y., FEBRUARY 16, 1965

[fol. 923]

IN THE UNITED STATES COURT OF APPEALS

FOR THE EIGHTH CIRCUIT

No. 17,441

---

JOHN DEERE COMPANY OF KANSAS CITY, a Corporation, and DEERE & COMPANY, a Corporation, Appellants,

v.

WILLIAM T. GRAHAM, and GRAHAM PLOW, INC., Appellees.

---

Appeal from the United States District Court for the Western District of Missouri

---

OPINION—June 18, 1964

Before Vogel, Matthes and Blackmun, Circuit Judges.

MATTHES, Circuit Judge.

This is an action for infringement of Patent No. 2,627,798 (hereinafter sometimes referred to as "Patent No. 798") issued to William T. Graham (plaintiff-appellee) on February 10, 1953, for a "Clamp for Vibrating Shank Plows." Graham Plow, Inc. (plaintiff-appellee) is a licensee under the patent. The trial court found the patent valid and that Claims 1 and 2 of the patent were infringed by defendants John Deere Company of Kansas City and Deere & Com-
[fol. 924] pany. From the judgment entered pursuant to findings of fact and conclusions of law defendants (hereinafter called "appellants") have appealed.

Jurisdiction is established by virtue of 35 U.S.C. § 281 and 28 U.S.C. § 1338.

Appellants advance two basic contentions. (1) That Patent No. 798 is invalid for want of invention and that the finding for appellees on this issue is clearly erroneous because the trial court: (a) failed to give proper consideration and effect to the rule that the presumption of

validity is weakened when pertinent prior art was not considered by the Patent Office; (b) applied an improper test of invention. (2) That even if validity of the patent is sustained, appellants' accused devices do not, within the rule or doctrine of equivalents, infringe Patent No. 798.[1] If appellants' position as to contention (1) is sound, i.e., if the Graham patent is invalid for want of invention, there can be no infringement of its claims and we need not consider contention (2). *Selmix Dispensers, Inc.* v. *Multiplex Faucet Co. (Inc.)*, 8 Cir., 277 F.2d 884, 886 (1960); *Caldwell* v. *Kirk Manufacturing Company*, 8 Cir., 269 F.2d 506, 507 (1959), cert. denied, 361 U.S. 915 (1959); *Briggs & Stratton Corporation* v. *Clinton Machine Co.*, 8 Cir., 247 F.2d 397, 400, 401 (1957), cert. denied, 355 U.S. 914 (1958).

Appellees urge and rely upon the uncontroverted rule, established by statute and consistently recognized by the courts, that a patent shall be presumed valid and that the burden of establishing invalidity of a patent shall rest on the party asserting it. 35 U. S. C. § 282; e.g., *Radio Corpo-*
[fol. 925] *ration of America* v. *Radio Engineering Laboratories, Inc.*, 293 U.S. 1, 7-8 (1934); *Steffan* v. *Weber Heating and Sheet Metal Company*, 8 Cir., 237 F.2d 601, 602 (1956). It is equally clear, however, that the presumption of validity is a rebuttable one, that when substantial evidence attacking the validity of a patent is introduced, the question whether the patent constitutes an invention is for the court, *Steffan* v. *Weber Heating and Sheet Metal Company*, supra, 237 F.2d at 602; *Continental Farm Equipment Co.* v. *Love Tractor*, 8 Cir., 199 F.2d 202, 204 (1952), cert. denied, 345 U.S. 909 (1953), and that the presumption of validity is weakened if applicable prior art is not considered by the Patent Office. *L. S. Donaldson Company* v. *La Maur, Inc.*, 8 Cir., 299 F.2d 412, 420 (1962), cert. denied, 371 U.S. 815 (1962); *Day-Bright Lighting, Inc.* v. *Sandee Manufacturing Co.*, 7 Cir., 286 F.2d 596, 597 (1960), cert.

[1] For a comprehensive and enlightening discussion of the doctrine of equivalents, see *Parmelee Pharmaceutical Company* v. *Zink*, 8 Cir., 285 F.2d 465, 470, et seq. (1961).

denied, 366 U.S. 963 (1961); *Cornell* v. *Adams Engineering Company,* 5 Cir., 258 F.2d 874, 875 (1958).

If, as urged by appellants, the trial court failed to apply the proper legal test or standard, it necessarily follows that its finding of patentability was induced by an erroneous view of the law, its finding is clearly erroneous, and the judgment based upon such finding cannot stand. *Great A. & P. Tea Co.* v. *Supermarket Equipment Corporation,* 340 U.S. 147, 153-154 (1950); *Selmix Dispensers, Inc.* v. *Multiplex Faucet Co. (Inc.),* supra, 277 F.2d at 886; *Caldwell* v. *Kirk Manufacturing Company,* supra, 269 F.2d at 508, 509.

This court has adhered to the position that since *Cuno Engineering Corp.* v. *Automatic Devices Corp.,* 314 U.S. 84 (1941), "the amount of originality and ingenuity, over and beyond novelty and utility, which will constitute in-[fol. 926] vention necessary to sustain a patent for a combination of old elements [such as we have here] in a crowded art, has increased." *Briggs & Stratton Corporation* v. *Clinton Machine Co.,* supra, (concurring opinion of Judge Sanborn, 247 F.2d at 401) and cases there cited. In *Caldwell* v. *Kirk Manufacturing Company,* supra, 269 F.2d at 509, Judge Sanborn again expressed the principle in this language:

> "More exacting standards for determining patentable invention have been applied by the courts in recent years than was formerly the case. In *Trico Products Corporation* v. *Delmar Corporation,* 8 Cir., 180 F.2d 529, 533, this Court said:
>
> "* * * 'The Supreme Court has, we think, raised the standards of originality necessary to sustain patents for improvements such as those involved in the instant cases, regardless of their usefulness or commercial success. Compare, *Eibel Process Co.* v. *Minnesota & Ontario Paper Co.,* 261 U.S. 45, 43 S.Ct. 322, 67 L.Ed. 523, and *Temco Electric Motor Company* v. *Apco Manufacturing Company,* 275 U.S. 319, 48 S.Ct.

170, 72 L.Ed. 298, with *Cuno Engineering Corp.* v. *Automatic Devices Corp.*, supra, 314 U.S. 84, 62 S.Ct. 37, 86 L.Ed. 58.'"

The same pronouncement appears in *Steffan* v. *Weber Heating and Sheet Metal Company*, supra, 237 F.2d at 604; *Selmix Dispensers, Inc.* v. *Multiplex Faucet Co. (Inc.)*, supra, 277 F.2d at 887; and *Crome & Company* v. *The Vendo Company*, 8 Cir., 299 F.2d 852 (1962), where Judge Blackmun in his dissent observed, "Mechanical combination patents in this court have met with little recent success."

With these pronouncements clearly in mind, we turn to the factual setting of the case. Inasmuch as the trial [fol. 927] court's Memorandum Opinion, Findings of Fact, and Conclusions of Law, W.D. Mo., 216 F.Supp. 272 (1963), adequately embody the general factual background, including the terms of the patent claims and other technical descriptions, we need here set forth only a condensed version of the facts.

Appellee Graham originally submitted twelve claims in his application to the Patent Office for a patent on a device which eventually was issued as Patent No. 798. The Patent Office rejected all twelve claims, partially on the grounds that some of them failed to patently distinguish from a prior patent issued to Graham—No. 2,493,811 (Patent No. 811)—and partially on the grounds of lack of invention. Graham then submitted two claims to be substituted for the original twelve, and these two claims were the basis for issuance of the 798 Patent.

Broadly stated, Patent 798 relates to the mounting of tools on a frame which is moved over the ground to break the soil—a process termed "chisel plowing." Appellee Graham Plow, Inc.'s predecessor manufactured and sold chisel plows wherein the upper forward portion of the shank was rigidly fixed to the plow beam by a *rigid* clamp. Because these rigid structures proved to be unsatisfactory due to their inability to withstand shocks when used for plowing in rocky country, Graham devised a *spring* clamp

structure, and was issued a patent—No. 811—on it in January, 1950. Graham Plow, Inc. has continued to manufacture and sell plows with spring clamps which embody the principle of the 811 Patent, but neither appellees, nor any licensee under them, has ever manufactured or sold a clamp embodying the 798 structure.

The 798 clamp—also a "spring clamp"—is used to connect the upper forward end of a resilient shank to a beam [fol. 928] with the lower end of the shank carrying a chisel for plowing or other ground-working operations. The clamp includes a body portion movably attached to the beam with a rearward portion having a pivot pin on which is pivotally mounted a movable part with a plate portion extending forwardly or longitudinally of the normal direction of travel of the plow. The upper forward portion of the shank extends through a stirrup or loop element at the rear of the movable part and longitudinally *beneath* the plate portion of the movable part and is connected to the plate at the forward end thereof at a substantial distance from the pivot pin, whereby the shank and movable part pivot together about the axis of the pivot pin. A coil spring is arranged at the forward end of the body and, through a nut, washer and spring rod, acts on the shank and plate member to resiliently urge the forward end of the shank and plate upwardly toward the body of the clamp to a stop engagement therewith to normally hold the shank in normal position. In plowing operations, forces are exerted rearwardly and upwardly on the chisel or other ground-working tool, and when sufficient to overcome the forces applied by the spring the shank and movable part will pivot on the pivot pin with the forward end of the shank and plate moving downwardly against the tension of the spring. Forces in plowing hold the shank against the rear of the plate of the movable part and when said forces are removed or lessened, or the ground-working tool removed from the ground, the shank at the rear of the movable part is supported by a stirrup or loop that embraces the shank adjacent the pivot of the movable part. In plowing operations, if the ground-working tool

strikes a rock or other obstruction, substantial shock and forces are applied to the shank, pivoting the shank and movable member about the pivot pin, tending to compress [fol. 929] the spring and permitting upward movement of the ground-working tool whereby it can pass over the rock or obstruction and, as it passes over such obstruction, the stirrup or loop on the movable part supports the shank against excessive rebound.

Five prior patents indicating the state of the prior art were made of record in the Patent Office during Graham's prosecution of the application for the 798 Patent. Four of these patents, ten others not of record in the Patent Office, and two other prior spring clamp devices not of record in the 798 file wrapper, were relied upon below by appellants as revealing the prior art.

Since our disposition of this case, as subsequently revealed, does not necessitate resolution of the infringement issue, we forego discussion of appellants' two accused devices, found to infringe Patent 798.

The following summarized findings of the trial court on the validity issue, among other findings and conclusions, induced the ultimate decision in favor of appellees:

(1) Although not all the now disclosed prior art was cited by the Patent Office, the statutory presumption of validity of the 798 Patent is not weakened or destroyed since the uncited prior art is "similar to some of the patents relied upon by the Patent Office Examiner."

(2) The prior art as a whole in one form or another contains all of the mechanical elements of the 798 Patent, and in a broad sense all of the elements are found in the Glencoe clamp. [Glencoe was not cited by the Patent Office]. Nevertheless, the particular arrangement of the elements disclosed by 798 is not present in any single reference or as a whole.

[fol. 930] (3) An *improved* functional result is obtained by the 798 Patent, and the main improvement is due to the particular arrangement of the shank in relation to the pivoted member and spring member which reflects in down-

ward flexing of the shank at the forward portion thereof alongside the plate portion of the pivoted member and does lessen wear and tear to some parts of the clamp.

(4) The 798 Patent is an improvement patent and, while the individual mechanical elements may be found in the prior art, taken as a whole the 798 structure is sufficiently different in the operative relationship of the shank and pivoted member with a slight but significant difference in the flexing of the forward portion of the shank that is not found in the prior art, so that the 798 structure involves invention.

(5) The differences between the 798 Patent and the prior art are such that the 798 combination would not have been obvious at the time Graham made his invention to a person having ordinary skill in the art of agricultural implements and other related arts.

We approach determination of the validity issue fully cognizant that the mere fact that all of the elements embodied in the 798 structure are found in the prior art does not ipso facto mean that the combined structure is not patentable. *Continental Farm Equipment Co.* v. *Love Tractor,* supra, 199 F.2d at 205. However, we also announced in *Continental,* supra, 199 F.2d at 204, citing *Great A. & P. Tea Co.* v. *Supermarket Equipment Corp.,* supra, 340 U.S. at 152, that when combination patent claims are under examination, courts should scrutinize them with a care proportioned to the difficulty and improbability of finding invention in an assembly of old elements. To be [fol. 931] patentable, a combination of individually old elements must contribute something new; the elements must cooperate to produce an accumulation which exceeds the sum of its parts. E.g., *Great A. & P. Tea Co.* v. *Supermarket Equipment Corp.,* supra, 340 U.S. at 151-152; *Lincoln Engineering Co.* v. *Stewart-Warner Corp.,* 303 U.S. 545, 549 (1938); *John Blue Company* v. *Dempster Mill Mfg. Co.,* 8 Cir., 275 F.2d 668, 672-673 (1960); *Caldwell* v. *Kirk Manufacturing Company,* supra, 269 F.2d at 508. Compare also, *Powder Power Tool Corp.* v. *Powder Actu-*

*ated Tool Co.*, 7 Cir., 230 F.2d 409, 415-416 (1956). Stated differently, "The bringing together of old elements in a mechanism involving no new principle, to produce an old result, however skillfully done, even though the result marks an advance in efficiency and utility, is but an exercise of mechanical skill and not invention." *General Bronze Corp.* v. *Cupples Products Corp.*, 8 Cir., 189 F.2d 154, 161 (1951).

Our task is to first ascertain whether the trial court applied the proper legal standard in determining the validity of Patent 798, and then to decide whether the patent satisfies the requirements of this test. At this point, we note that the 798 Patent has been held valid on two occasions in appeals before the Fifth Circuit. *Jeoffroy Mfg., Inc.* v. *Graham*, 219 F.2d 511 (1955), cert. denied, 350 U.S. 826 (1955), and *Graham* v. *Cockshutt Farm Equipment, Inc.*, 256 F.2d 358 (1958). Unlike our court, the Fifth Circuit has "long recognized . . . that an improvement combination is patentable even though its constituent elements are singly revealed by the prior art, where . . . it produces an *old result in a cheaper and otherwise more advantageous way.*" (Emphasis supplied.) 219 F.2d at 519. For other recognition by the Fifth Circuit of the "old result in a more efficient and economical way" see, *Cornell* v. *Adams Engineering Company*, supra, 258 F.2d at 875-876.

[fol. 932] Undoubtedly, and perhaps understandably, the trial court below was at least partially motivated in its decision by the two prior Fifth Circuit cases involving Patent 798. Of course, the decisions of another circuit are entitled to respect and are not to be brushed aside lightly, but they are not binding upon appellants in this case, nor upon us. See *Aeration Processes* v. *Lange*, 8 Cir., 196 F.2d 981, 982 (1952), cert. denied, 344 U.S. 834 (1952). It is for this court, upon the record here, including the arguments, stipulations, and concessions, to decide whether Patent 798 is valid.

Here, the trial court couched its Finding XV rather precisely in the statutory standard of invention found in

35 U.S.C. § 103, and found that the 798 Patent structure would not have been obvious at the time it was made to a person having ordinary skill in the art. But, other findings of the court lay stress on "an *improved* functional result," and nowhere does the court find any new or significantly different result. Seemingly, the trial court failed to apply the more exacting standard which in our view is implicit in the teachings of the Supreme Court in *Cuno Engineering Corporation,* supra, 314 U.S. 84, and *Great A. & P. Tea Co.,* supra, 340 U.S. 147, and which we have applied in numerous cases subsequent thereto.

Furthermore, even assuming that the trial court's finding of "a slight but significant difference in the flexing of the forward portion of the shank that is not found in the prior art" can be construed as a finding of a new result, the court's further finding that Patent 798 exhibits invention and would not have been obvious to a person having ordinary skill in the art is clearly erroneous. The alleged patentable difference between the 798 structure and the prior art lies in the arrangement in the 798 structure of [fol. 933] the shank *below* the plate of the pivoted member, permitting the shank to flex throughout its length and particularly permitting the forward portion of the shank to flex downwardly *away* from the plate. Theoretically, at least, when the plate is below the shank, as in the prior art, there is a tendency of the shank to bend *against* the plate and when the plate is above, as in the 798 Patent, there is a tendency of the shank to bend *away from* the plate.

But is this difference significant enough to support the patent? We think not. Painstaking examination of the entire record, including the testimony of the experts, convinces us that the changes in the prior art embodied in the 798 Patent involve only application of mechanical ability, and that there is no adequate evidentiary support for the trial court's finding of invention. As surely as the disc harrow device in *Continental Farm Equipment Co.* v. *Love Tractor,* supra, 199 F.2d 202, and the animal rubbing and oiling apparatus in *Caldwell* v. *Kirk Manufacturing Company,* supra, 269 F.2d 506—to name but two, did not in-

volve inventive genius, neither does the rearrangement of shank, plate and pivot pin in the 798 structure. While perhaps more efficient, the inversion of the parts so as to allow the shank to flex downwardly away from the plate above it did not bring about a significantly new or different result, and would have been obvious to a person having ordinary skill in the art.

Additionally, it is significant that in the 798 Patent claims, nothing is mentioned about the shank reflex which became the basic reason for sustaining the validity of the patent in the trial court. To be sure, it is the claim that measures the grant to the patentee, *Briggs & Stratton Corporation* v. *Clinton Machine Co.*, supra, 247 F.2d at 400, and here the claims of the 798 Patent are silent concerning [fol. 934] the alleged flex.[2] Appellants point out that, to the contrary, any flexing of the [illegible] way from the plate portion of the pivoted mem[illegible] in direct conflict with the claims which s[illegible] eans connecting the shank to the plate mainta[illegible] face of the shank in *constant continuous* conta[illegible] he underface of said plate portion of the shank attaching member." (Emphasis supplied.)[3] See entire claims set forth, supra, 216 F.Supp. at 274-275.

---

[2] In *Lincoln Engineering Co.* v. *Stewart-Warner Corp.*, supra, 303 U.S. at 550, the Supreme Court, in refusing to accept a suggestion that a function, not mentioned in the specifications of the patent, was significantly new and different so as to support the validity of the patent, stated:

> "The suggestion seems to be an afterthought. No such function . . . is hinted at in the specifications of the patent. If this were so vital an element in the functioning of the apparatus it is strange that all mention of it was omitted."

[3] Appellees take issue with this assertion, stating that appellants "are interpreting the wording of the claims to specify that the contact between the upper face of the shank and the under face of the plate portion is for the entire length of those faces, but the claims do not say that. *There is no extent of such contact specified in the claims.* Actually in the structure the bolt and nut at the forward end of the plate and shank maintain the upper face of the shank in constant continuous contact with the under face of

It is also interesting to note that in the early stages of this case appellees propounded three interrogatories under Rule 33, Fed. R. Civ. P., inquiring as to flex in the shank of appellants' accused devices. Appellants objected on the grounds that the interrogatories were not relevant, and Judge Ridge—then sitting on the case—sustained the objections, stating:

> "These interrogatories relate to a flexing of the shank of the accused device, and appear irrelevant since such a flexing is not a claim of the patent in suit and Plaintiffs do not undertake to otherwise demonstrate the relevancy of such inquiry."

[fol. 935] In conclusion, we observe once again that the Constitution, Article I, Section 8, Clause 8, authorizes Congress to reward inventive genius but not mechanical skill alone. *Cuno Engineering Corporation* v. *Automatic Devices Corporation,* supra, 314 U.S. at 91; *Steffan* v. *Weber Heating and Sheet Metal Company,* supra, 237 F.2d at 604. The public is a silent but an important and interested party in all patent litigation, and is entitled to protection against the monopolization of what is not lawfully patentable. *Rota-Carb Corporation* v. *Frye Manufacturing Company,* 8 Cir., 313 F.2d 443, 444 (1963). For a recent discussion of the purpose of federal patent law and the need to guard the rights of the public, see *Sears, Roebuck & Co.* v. *Stiffel Co.,* 376 U.S. 225, 228-231 (1964).

Since we have concluded that the 798 Patent is invalid, there is obviously no need to consider the infringement issue.

Accordingly, and for the reasons stated in the opinion, the judgment is reversed and the case remanded with directions to dismiss the action.

---

the plate portion of the shank-attaching member at that part where the bolt and nut pass through. . . . The flexing is in that portion of the shank that is rearwardly of that bolt. . . ." (Emphasis supplied.)

[fol. 936]

IN THE UNITED STATES COURT OF APPEALS

FOR THE EIGHTH CIRCUIT

No. 17,441

---

JOHN DEERE COMPANY OF KANSAS CITY, a Corporation, and DEERE & COMPANY, a Corporation, Appellants,

vs.

WILLIAM T. GRAHAM, and GRAHAM PLOW, INC.

---

Appeal from the United States District Court for the Western District of Missouri.

---

JUDGMENT—June 18, 1964

This cause came on to be heard on the record from the United States District Court for the Western District of Missouri, and was argued by counsel.

On Consideration Whereof, It is now here Ordered and Adjudged by this Court that the judgment of the said District Court in this cause be, and the same is hereby, reversed with costs; and that John Deere Company of Kansas City, a Corporation, and Deere & Company, a Corporation, have and recover against William T. Graham, and Graham Plow, Inc., the sum of Four Thousand Two Hundred Twenty-two and 32/100 Dollars for their costs in this behalf expended and have execution therefor.

And it is further Ordered by this Court that this cause be, and it is hereby, remanded to the said District Court with directions to dismiss the action.

[fol. 937]

(Petition of Appellees for Rehearing)

(Filed in U.S. Court of Appeals,
Eighth Circuit, on July 7, 1964)

IN THE UNITED STATES COURT OF APPEALS

FOR THE EIGHTH CIRCUIT

No. 17,441

Civil

---

JOHN DEERE COMPANY OF KANSAS CITY, a Corporation, and DEERE & COMPANY, a Corporation, Appellants,

vs.

WILLIAM T. GRAHAM, and GRAHAM PLOW, INC., Appellees.

---

Appeal from the District Court of the United States for the Western District of Missouri, Western Division.

---

PETITION FOR REHEARING

Appellees (Petitioners here), William T. Graham and Graham Plow, Inc., respectively, petition the Honorable Circuit Judges Vogel, Matthes and Blackmun for a rehearing to correct certain fundamental errors upon which their opinion dated June 18, 1964, is founded.

[fol. 938]

Statement of Errors in the Opinion of June 18, 1964

I.

Presumption of Validity

This Court's opinion, on page 3, cites decisions relative to the presumption of validity and that the presumption of validity is weakened if applicable prior art is not considered by the Patent Office and, on page 7, mentions that

there were ten patents not of record in the Patent Office and two prior spring devices not of record in the 798 file wrapper relied upon by Appellants as revealing the prior art. Apparently, this Court considered that relying on additional patents not cited by the Patent Office weakened the presumption of validity of the 798 patent. The Patent Office had before it a Rolf application for patent on the Glencoe structure and which matured into Patent No. 2,739,518, which application was copending with the application for the Graham 798 patent (R. Vol. III, pp. 593-4); the Examiners in the same Division acted on both the application for the Graham 798 patent and the Rolf application (R. Vol. II, pp. 400-1; Vol. III, pp. 607, 685), and also the Examiners cited the Rix Patent No. 287,965 (Vol. III, pp. 607, 759), all of which indicates that the Examiners did consider some of the alleged additional prior art. Furthermore, the Patent Office cited the Petersen Patent No. 57,391 (R. Vol. III, pp. 727, 733) which was of the same character of some of the alleged additional prior art (R. Vol. II, pp. 432-3), and the Patent Office cited the Graham 811 patent (R. Vol. III, p. 717) and it was substantially the same as the Jeoffroy SC-580 device. The [fol. 939] Court apparently overlooked similarities of the alleged additional prior art to that cited by the Patent Office and, when those similarities are considered, it shows that the Patent Office did consider the applicable prior art and it should be held that the presumption of validity is not weakened.

## II.

### Legal Standard in Determining Validity

This Court's opinion, page 9, quotes from the decision in *General Bronze Corp.* v. *Cupples Products Corp.*, 8 Cir., 189 F. 2d 154, 161 (1951) in setting out the test of validity and, on page 10, suggests that the Trial Court seemingly failed to apply the more exacting standards that this Court feels are implicit in the teachings of the Supreme Court in certain cases.

The Court of Appeals apparently applies a "more exacting standard" for invention (Op. p. 10) than required by

statute, 35 U.S.C. Sec. 103, when relying on the *Cuno Engineering Corporation* case (314 U.S. 84), which case held invention "must reveal a flash of creative genius". 35 U.S.C. Sec. 103 abrogated such a standard for invention. *Pacific Contact Laboratories, Inc.* v. *Solex Laboratories, Inc.*, 9 Cir., 209 F. 2d 529, 532.

In this case, the Court overlooks the fact that there can be an improved functional result in operative parts with an old end purpose or result, and at the same time a new result in parts of the structure. The old end result is plowing or breaking the soil. The improved functional result is in the use of flexing of the shank to reduce breakage of the equipment. The new result in the 798 patent is the mounting with the shank bending away from the plate instead of against the plate as was the characterization of [fol. 940] the prior art. This Court has failed to consider all of the Trial Court's Finding XIII wherein the new result is embodied in the description of the cause of the improved functional result. When fully considered, the Findings XIII and XV of the Trial Court indicate the proper legal standards of determining validity were applied.

## III.

### Significance and Obviousness of the Invention

This Court's opinion, on pages 10 and 11, that the difference between the 798 patent and the prior art is not significant enough to support the patent and that the inversion of the parts so as to allow the shank to flex downwardly away from the plate would have been obvious to a person having ordinary skill in the art, overlooked the fact that all of the prior art showed shanks and plates arranged for the shank to bend against the plate. The actual teachings of the prior art from an examination of the charts (Def. Ex. 24 and 25) was that they should be so arranged and was not as Fishleigh, Defendants' expert, applied them with hindsight.

Furthermore, the record shows that Defendants' engineers did not find it obvious. Surveys (Def. Ex. 30 and 31, Vol. IV, pp. 799, 823) were made in the field and the Graham

798 patent was before them when the accused devices were designed. The record is devoid of any prior art that teaches a structure wherein the shank bends away from the plate instead of bending against the plate. The Court overlooks the fact that all of those skilled in the art and working to devise mountings for tools on a frame to break the soil arranged the shank to bend against the plate. Graham was the first to conceive of a structure having a different bending. The fact that this concept escaped all [fol. 941] others working in the field is evidence that the change was not obvious.

## IV.

### Flexing Not Mentioned in Claims

This Court's opinion (pp. 11-12) attaches great weight to the fact that the shank flex is not mentioned in the claims of the Graham 798 patent and apparently agrees with Appellants' point that any flexing of the shank away from the plate portion of the pivoted member would be in direct conflict with the claims which specify that the means connecting the shank to the plate maintain "the upper face of the shank in constant continuous contact with the underface of said plate portion of the shank attaching member".

This opinion fails to recognize that the flexing is a function of the structure and that it is not necessary for a function to be mentioned in a claim and that at the time of issuance of the 798 patent functional claims were considered improper. *Halliburton Oil Well Cementing Co.* v. *Walker*, 329 U.S. 1, 67 S. Ct. 6, 91 L. Ed. 3, 9. Also, the record (Vol. II, pp. 366, 461) shows that the structure did provide for flex of the shank while there was constant continuous contact at the forward end of the shank. The claims do not require any particular extent of such contact.

This Court's reliance on Judge Ridge's ruling on interrogatories ignores the fact the plaintiffs merely preferred to wait until the trial to make the showing of the flexing of the shank and the ruling was not made after such showing.

Wherefore, Appellees respectfully and earnestly pray that the Court will give this petition careful consideration; that rehearing be granted and that upon final hearing the judgment of the Trial Court be affirmed.

[fol. 942] Certificate of Counsel

I, Orville O. Gold, one of the attorneys for Appellees, hereby certify that the foregoing petition for rehearing is presented in good faith in the earnest and sincere belief that this Court has erred in the particulars pointed out, and this petition is not made for delay.

It is further certified that copies of this petition have been served upon the attorneys of record for appellants by delivering same to Scofield, Kokjer, Scofield & Lowe, 1325 Rialto Building, Kansas City, Missouri, this 6th day of July, 1964.

Respectfully submitted,

Orville O. Gold, Attorney for Appellees.

---

[fol. 943]

In the United States Court of Appeals

For the Eighth Circuit

No. 17,441. September Term, 1963.

---

John Deere Company of Kansas City, a corporation, and Deere & Company, a corporation, Appellants,

vs.

William T. Graham and Graham Plow, Inc.

---

Appeal from the United States District Court for the Western District of Missouri.

---

Order Denying Petition for Rehearing—July 13, 1964

Petition of appellees for rehearing filed in this cause having been considered, It is now here Ordered by this Court that the same be, and it is hereby, denied.

[fol. 944] Clerk's Certificate to foregoing transcript (omitted in printing).

---

[fol. 945]

SUPREME COURT OF THE UNITED STATES

No. 580, October Term, 1964

---

WILLIAM T. GRAHAM, et al., Petitioners,

vs.

JOHN DEERE COMPANY OF KANSAS CITY, et al.

---

ORDER ALLOWING CERTIORARI--January 18, 1965

The petition herein for a writ of certiorari to the United States Court of Appeals for the Eighth Circuit is granted, and the case is placed on the summary calendar.

And it is further ordered that the duly certified copy of the transcript of the proceedings below which accompanied the petition shall be treated as though filed in response to such writ.

OFFICE COPY

# United States Court of Appeals

FOR THE EIGHTH CIRCUIT

---

## No. 17,540.

CIVIL.

CALMAR, INCORPORATED,
*Appellant,*

vs.

COOK CHEMICAL COMPANY,
*Appellee.*

---

## No. 17,541.

CIVIL.

COLGATE-PALMOLIVE COMPANY,
*Appellant,*

vs.

COOK CHEMICAL COMPANY,
*Appellee.*

---

APPEALS FROM THE UNITED STATES DISTRICT COURT FOR THE WESTERN DISTRICT OF MISSOURI.

---

INDEX

Volume I


Proceedings in United States District Court in the Case of Calmar, Incorporated, v. Cook Chemical Co. ..... 1
Complaint ..... 1
Answer and Counterclaim ..... 3

Answer to Counterclaim ..... 5
Amended Answer to Counterclaim ..... 5
Proceedings in United States District Court in the Case of Colgate-Palmolive Co. v. Cook Chemical Company ..... 9
Complaint ..... 9
Answer to Complaint and Count I of Counterclaim ..... 12
Reply of Plaintiff to Counterclaim of Defendant, Section I 14
Order Sustaining Motion to Consolidate Cases ..... 15
Order Admitting into Evidence Plaintiff's Exhibits ZZ and AAA ..... 16
Memorandum Opinion; Findings of Fact and Conclusions of Law of District Court ..... 17
Judgment, July 31, 1963 ..... 36
Order Admitting in Evidence Plaintiff's Exhibits AB, AC and AD ..... 38
Notice of Appeal of Calmar, Inc., and Colgate-Palmolive Co. 39
Docket Entries in District Court in No. 12349-3 ..... 40
Docket Entries in District Court in No. 13006-3 ..... 45
Transcript of Evidence ..... 49
Caption ..... 49
Colloquy between Court and Counsel ..... 49
Testimony for Defendant ..... 50
Ralph G. Martin ..... 50
Defendant Wise Deposition Exhibit 5, Recital As to .. 56
Defendant's Exhibits ..... 57
24, Recital As to ..... 57
42, Recital As to ..... 57
30, Recital As to ..... 58
28, Recital As to ..... 58
44 and 46, Recital As to ..... 59
48 and 50, Recital As to ..... 59
Plaintiff's Exhibits A and B, Recital As to ..... 61
Plaintiff's Exhibit C, Recital As to ..... 65
Defendant's Exhibit 34, Recital As to ..... 65
Plaintiff's Exhibit D, Recital As to ..... 66
Statement to Court by Mr. Gordon Schmidt ..... 70
Robert Wise ..... 71
Defendant's Exhibit 26, Recital As to ..... 74
Defendant's Exhibits 152, 154, 156, 158, 160, 162, 164, Recitals As to ..... 76
Defendant's Exhibit 166, Memorandum from John F. Boehm to Robert Wise, August 29, 1958, Excerpt from ..... 77
Defendant's Exhibit 150, Recital As to ..... 78

Defendant's Exhibit 198, (Reproduced in Exhibit Volume) ..... 81
Clarence T. Fishleigh ..... 82
Defendant's Exhibit 10, Patent in Suit, Recital As to (Reproduced in Volume of Exhibits) ..... 84
Defendant's Exhibit 54, Recital As to ..... 84
Defendant's Exhibit 72, Recital As to ..... 89
Defendant's Exhibit 90, (Reproduced in Exhibit Volume) ..... 94
Defendant's Exhibits 74, 76, 78, 80, 82, 84 and 86, Recitals As to ..... 95
Defendant's Exhibits 88 and 90, Recitals As to ..... 96
Defendant's Exhibits 102, 104, 106, 108, 110 and 112, Recitals As to (Exhibits 110 and 112 in Vol. of Exhibits) ..... 104
Defendant's Exhibits 114, 116 and 118 (Reproduced in Volume of Exhibits) ..... 106
Harry G. Austin, Jr. ..... 107
Defendant's Exhibits 31 and 33 (Reproduced in Exhibit Volume) ..... 108
Defendant's Exhibit 35 (Reproduced in Exhibit Volume) ..... 109
Clarence T. Fishleigh, Recalled ..... 111
Defendant's Exhibit 120, (Reproduced in Exhibit Volume) ..... 111
Plaintiff's Exhibit F, (Reproduced in Exhibit Volume) ..... 124
Plaintiff's Exhibit G, (Reproduced in Exhibit Volume) ..... 130
Plaintiff's Exhibits H and I, Letters Patents, (Reproduced in Exhibit Volume) ..... 140
Baxter I. Scoggin ..... 143
Plaintiff's Exhibits J and K, Recitals As to ..... 159
Plaintiff's Exhibits L and M, (Reproduced in Exhibit Volume) ..... 160
Plaintiff's Exhibit N, Recital As to ..... 161
Plaintiff's Exhibit O, Recital As to ..... 162
Defendant's Exhibits 136 and 138, Recital As to ..... 173
Testimony for Plaintiff ..... 173
Colloquy between Court and Counsel ..... 173
Recitals As to Exhibits, P to Z, and AA to CC ..... 173
Chester M. Turner ..... 175
Ralph G. Martin, Recalled ..... 179
Robert Wise, Recalled ..... 180
Defendant's Exhibit 82, Recital As to ..... 182
Plaintiff's Exhibits ..... 183

DD, (Reproduced in Exhibit Volume) ..... 183
EE, (Reproduced in Exhibit Volume) ..... 183
FF, (Reproduced in Exhibit Volume) ..... 184
HH-1 to HH-15, (Reproduced in Exhibit Volume) ..... 186
Joseph McCormack ..... 194
Plaintiff's Exhibit II, (Reproduced in Exhibit Volume) ..... 196
Plaintiff's Exhibits JJ and KK, (Reproduced in Exhibit Volume) ..... 198
Plaintiff's Exhibit LL, (Reproduced in Volume of Exhibits) ..... 199
Plaintiff's Exhibits MM, NN and OO, (Reproduced in Volume of Exhibits) ..... 199
Douglas F. Corsette ..... 200
Plaintiff's Exhibits ..... 201
PP, (Reproduced in Exhibit Volume) ..... 201
QQ, (Reproduced in Exhibit Volume) ..... 202
Defendant's Exhibits ..... 224
121, (Reproduced in Exhibit Volume) ..... 224
122, Recital As to ..... 224
Lawrence C. Kingsland ..... 239
Plaintiff's Exhibit VV, Recital As to ..... 244
Plaintiff's Exhibits ..... 262
WW and XX, Recitals As to ..... 262
Offer of Exhibits in Deposition of Mr. Scoggin ..... 262
26 and 27, Recitals As to ..... 264
16, Recital As to ..... 264
17 and 18, Recitals As to ..... 265
Testimony for Defendant in Rebuttal ..... 271
Baxter I. Scoggin ..... 271
Defendant's Exhibits ..... 272
124, Recital As to ..... 272
210, (Reproduced in Exhibit Volume) ..... 272
Clarence T. Fishleigh ..... 272
Defendant's Exhibit 222, Recital As to ..... 279
Defendant's Exhibit 224, (Reproduced in Volume of Exhibits) ..... 282
Deposition of Richard High, Excerpts from (Plaintiff's Ex. LL) ..... 285
Deposition Exhibits 125 and 126, Recitals As to ..... 287
Deposition of Anthony J. Ratichek, Excerpts from (Plffs. Ex. XX) ..... 289
Deposition Exhibits ..... 291
130 and 131, Recitals As to ..... 291

132, Recital As to ..... 291
133, Recital As to ..... 295
134 and 135, Recitals As to ..... 295
Deposition of Robert D. Wise, Excerpts from (Defendant's Ex. 206) ..... 298
Deposition Exhibit 1, Recital As to ..... 301
Deposition of E. G. "Pat" O'Reilly, Excerpts from (Defendant's Exhibit 138) ..... 313
Deposition of James A. McNeill, Excerpts from (Defendant's Exhibit 134) ..... 319
Deposition of Lee E. McIntyre, Excerpts from (Defendant's Exhibit 130) ..... 328
Deposition of Andrew M. Martin, Excerpts from (Defendant's Exhibit 136) ..... 334

## VOLUME OF EXHIBITS

### Index to Exhibits

Plaintiff's Exhibits ..... 341
C, (Scoggin Deposition Exhibit 67), Defendant's Circular to Trade, November, 1959 ..... 341
E, (Scoggin Deposition Exhibit 13), Application for Scoggin Patent in Suit ..... 347
F, Claim 18 of Scoggin Application Viz-a-Viz Claim 25 (Claim 1 of Patent in Suit) ..... 379
G, Photograph of Large Scale Model of Device of Patent in Suit, Scoggin Patent No. 2,870,943 ..... 381
G-1, Photograph of Model (Exhibit G) with Pump Plunger Removed ..... 383
H, Letters Patent No. 2,715,480 to J. G. Livingstone, August 16, 1955 ..... 385
I, Letters Patent No. 2,763,402 to J. G. Livingstone, September 18, 1956 ..... 390
J, Preliminary Sketch of Bakan 2 Sprayer Parts ..... 396
L, (Scoggin Deposition Exhibit No. 40), Memorandum from Chester M. Turner to Baxter I. Scoggin et al. ..... 397
M, (Scoggin Deposition Exhibit No. 37), Preliminary Sketch of Bakan 2 Sprayer, February 11, 1957 ..... 399
P, Drawing of Bakan 1 Sprayer ..... 401
Q, Drawing of Bakan 2 Sprayer ..... 403
S, Drawing of Bakan 3 Sprayer ..... 405
T, Letters Patent No. 2,119,884 to F. W. Lohse, June 7, 1938 ..... 407
U, Letters Patent No. 2,586,687 to R. Mellon, February 19, 1952 ..... 410

V, Letters Patent No. 2,861,839 to R. Mellon, November 25, 1958 ..... 414
Y, Letters Patent No. 2,434,875 to F. M. Turnbull et al., January 20, 1948 ..... 419
DD, Defendant's Advertising—Bakan 2 Sprayer ..... 429
EE, Defendant's Advertising—Bakan 2, Modified Sprayer 431
FF, Defendant's Advertising (1961) Omitting Reference to Bakan 2 Sprayer ..... 433
GG, Defendant's Advertising—Bakan 3 Sprayer ..... 438
HH 1-13, Photographs of Physical Exhibits Illustrating Various Packaging Methods ..... 440
II, Summary of Sales in 1958 of Colgate's Insecticide with Sprayer on Side of Bottle ..... 454
JJ, Enlarged Drawing of Livingstone Patent No. 2,751,480 455
KK, Enlarged Drawing of Mellon Patent No. 2,586,687 ..... 457
MM, Letters Patent No. 2,844,290 to W. J. Slade, July 22, 1958 ..... 459
NN, Letters Patent No. 2,118,222 to O. G. Nilson, May 24, 1938 ..... 462
OO, Letters Patent No. 1,447,712 to J. W. Darley, Jr., March 6, 1923 ..... 468
PP, Photograph of Large Scale Model of Accused SS40 Sprayer ..... 471
PP-a, Photograph of Large Scale Model of Accused SS40 Sprayer ..... 473
QQ, Drawing of Accused SS40 Sprayer ..... 475
VV, Drawing of SS40 Sprayer ..... 477
YY, (Scoggin Deposition Exhibit No. 27) Drawing of Accused SS40 Sprayer ..... 479
ZZ, Stipulation Concerning Commercial Sprayers ..... 480
AB, Letters Patent No. 3,064,865 to B. I. Scoggin et al., November 20, 1962 ..... 496
AC, Excerpts from Scoggin et al. Application 835,680 (Patent No. 3,064,865) ..... 501
AD, Excerpts from Forfeited Scoggin et al. Application No. 789,902 ..... 504

Defendant's Exhibits ..... 510
10, Letters Patent No. 2,870,943 (Patent in Suit), to B. I. Scoggin, Jr., January 27, 1959 ..... 510
31, Photograph of Austin Window Cleaner with Bakan 3 Sprayer ..... 513
31-A, Photograph of Austin Window Cleaner with Bakan 3 Sprayer-Overcap Removed ..... 514
33, Photograph of Austin Window Cleaner—Earlier Package Without Sprayer ..... 515
35, Summary of Sales by Austin (1957-1962) ..... 516
90, Drawing of Bakan 2 Modified Sprayer ..... 517

94, Chart #1—Fishleigh ..... 519
110, Photomicrograph of Defendant's Exhibit 102 ..... 521
112, Photomicrograph of Defendant's Exhibit 104 ..... 522
114, Photomicrograph of Defendant's Exhibit 106 ..... 523
116, Photomicrograph of Defendant's Exhibit 108 ..... 524
118, Drawings Prepared from Defendant's Exhibits 110, 112, 114 and 116 ..... 525
120, Chart #2—Fishleigh ..... 527
121, Letters Patent No. 2,956,509 to R. C. Cooprider and Douglas F. Corsette, October 18, 1960 ..... 529
150, Sketch of Boot for Sprayer ..... 537
160, Memorandum by Davis (Calmar)—March, 1958 ..... 538
162, Memorandum by Davis (Calmar)—May, 1958 ..... 540
198, Notes on Calmar Development Committee Meeting, December 18, 1957 ..... 541
200, Memorandum—Wise to Department Heads, November 20, 1958 ..... 544
202, Memorandum by Wise to W. H. Harnage, March 31, 1958 ..... 550
210, Photograph of Scoggin Experimental Closure Cap ..... 551
224, Chart #3, Fishleigh ..... 553

| | Original | Print |
|---|---|---|
| Proceedings in the United States Court of Appeals for the Eighth Circuit | 555 | 555 |
| Opinion, Mehaffy, J. | 555 | 555 |
| Judgment | 565 | 564 |
| Petition of appellants for rehearing en banc under this Court's Rule 15 | 566 | 565 |
| Order denying petition of appellants for rehearing en banc | 578 | 577 |
| Order denying motion of appellants to recall and stay issuance of mandate | 579 | 577 |
| Clerk's certificate | 580 | 578 |
| Orders allowing certiorari | 581 | 579 |

[1] COMPLAINT

(Filed in United States District Court April 27, 1959)

IN THE UNITED STATES DISTRICT COURT FOR THE WESTERN DISTRICT OF MISSOURI, WESTERN DIVISION

CALMAR, INCORPORATED,
Plaintiff,
v.
COOK CHEMICAL COMPANY,
Defendant.

Civil Action No. 12349

1. Plaintiff, CALMAR, INCORPORATED, is a corporation of the State of California, having a place of business at Los Angeles, County of Los Angeles, State of California.

2. Defendant, COOK CHEMICAL COMPANY, is a corporation of the State of Missouri, having a place of business at Kansas City, County of Jackson, State of Missouri.

3. This is an action for Declaratory Judgment under Title 28, U.S.C., Section 2201, and the jurisdiction of this Court is predicated upon the Patent Laws of the United States of America.

[2] 4. This action arises from an actual justiciable controversy now existing between Plaintiff and Defendant with respect to the charge by Defendant of infringement by Plaintiff of the following United States Letters Patent, on information and belief owned by Defendant, and with respect to Plaintiff's denial of infringement and of the validity of said Letters Patent:

No. 2,870,943, in the name of Baxter I. Scoggin, Jr., patented January 27, 1959, for "Pump-Type Liquid Sprayer Having Hold-Down Cap".

5. Plaintiff has made and sold, and intends to continue to make and sell pump-type liquid sprayers having hold-down caps for dispensing liquids from containers.

6. Defendant has asserted, and Plaintiff has denied, that the manufacture, sale and use of the said liquid sprayers is an infringement of and is within the valid scope of the claims of the aforesaid Letters Patent, and Plaintiff has informed Defendant that said Letters Patent are invalid.

[3] WHEREFORE, Plaintiff prays:

1. That this Court grant and enter a judgment declaring that said United States Letters Patent No. 2,870,943 are invalid and void.

2. That this Court grant and enter a judgment declaring that said United States Letters Patent No. 2,870,943 are not infringed by Plaintiff.

3. That this Court grant and enter a judgment declaring that it is the right of Plaintiff to continue to make, use and sell its liquid sprayers without let or hindrance from Defendant, whether asserted against Plaintiff or against customers of Plaintiff.

4. That the costs of this action be assessed against Defendant.

5. That Plaintiff have such other and further relief as justice may require.

Morrison, Hecker, Buck, Cozad & Rogers
Attorneys for Plaintiff

Of Counsel:

Francis G. Cole
Watson, Cole, Grindle & Watson
815 - 15th Street, N.W.
Washington 5, D. C

[4] ANSWER TO COMPLAINT

(Filed in United States District Court on August 14, 1959)

COMES NOW Defendant, Cook Chemical Company, and for answer to the complaint states as follows:

1. Defendant admits the allegations of paragraphs 1 to 6 inclusive of the complaint

COUNTERCLAIM

As to its counterclaim, Defendant states:

2. That Defendant is a corporation of the State of Missouri, having a place of business at Kansas City, County of Jackson County, State of Missouri.

3. That Plaintiff, Calmar, Incorporated, is a corporation of the State of California, having a place of business at Los Angeles, County of Los Angeles, State of California, and is before this court as Petitioner in the complaint against Defendant.

4. That this court has jurisdiction of this counterclaim and of the parties because the cause arises under the patent laws of the United States, and U. S. Code, Title 28, Section 1338 (a); and Title 28, Section 1400 (b), as more fully hereinafter appears.

[5] 5. That United States Letters Patent No. 2,870,943 was duly and legally issued to Defendant on January 27, 1959, in the name of Baxter I. Scoggin, Jr., for a "PUMP-TYPE LIQUID SPRAYER HAVING HOLD-DOWN CAP", and that Defendant retains all rights and title to said patent.

6. That Defendant is informed and believes, and on information and belief alleges, that Plaintiff, within six years prior to the filing of this counterclaim, within the district of this court and elsewhere in the United States, infringed and is still infringing said patent by manufacturing, using and selling sprayers embodying the inventions patented by said Letters Patent unlawfully and without license from Defendant, and will continue to infringe unless enjoined by this court.

7. That Defendant is informed and believes, and upon information and belief alleges, that Plaintiff has committed the aforesaid acts of infringement in knowing, wanton and deliberate disregard of the rights of Defendant.

8. That Plaintiff had actual knowledge of said patent at the time of commencement of said acts of infringement.

WHEREFORE, Defendant prays:

1. That the complaint be dismissed with costs to Plaintiff.

2. That a judgment be entered that said patent is valid.

3. That a judgment be entered decreeing that Plaintiff infringes said patent.

[6] 4. That Plaintiff be ordered to account to Defendant for damages suffered by reason of the infringing acts herein complained of.

5. That Defendant have judgment against the Plaintiff for its reasonable attorneys' fees incurred in this action.

6. That Defendant have judgment against Plaintiff for the costs and disbursements incurred herein by Defendant.

7. That the Defendant have such further and other and different relief as this court may deem meet and proper.

Hovey, Schmidt, Johnson & Hovey
By Donald E. Johnson
1816 Federal Reserve Bank Bldg
Kansas City 6, Missouri
Attorneys for Defendant

[7] ANSWER TO COUNTERCLAIM

(Filed in United States District Court on August 20, 1959)

Plaintiff, Calmar, Incorporated, for answer to the counterclaim states:

1. Plaintiff reasserts that United States Letters Patent 2,870,943 are invalid and void and are not infringed by Plaintiff.

2-4. Plaintiff admits the allegations of paragraphs 2, 3, and 4 of the counterclaim.

5. Plaintiff denies that United States Letters Patent 2,870,943 were duly and legally issued, but admits that said Letters Patent were issued to Defendant on January 27, 1959, and that Defendant retains title thereto.

6-8. Plaintiff denies each and every allegation of paragraphs 6, 7, and 8 of the counterclaim.

[8] WHEREFORE, Plaintiff prays:

1. That the counterclaim be dismissed.

2. That Plaintiff have its costs and attorneys' fees and also such other and further relief as may be just.

Morrison, Hecker, Buck & Cozad
1701 Bryant Building
Kansas City 6, Missouri
Attorneys for Plaintiff

---

[9] AMENDED ANSWER TO COUNTERCLAIM

(Filed in United States District Court on September 18, 1961)

Plaintiff, Calmar, Incorporated, for amended answer to the counterclaim states:

1. Plaintiff reasserts that United States Letters Patent 2,870,943 are invalid and void and are not infringed by plaintiff.

2-4. Plaintiff admits the allegations of paragraphs 2, 3 and 4 of the counterclaim.

5. Plaintiff denies that United States Letters Patent 2,870,943 were duly and legally issued, but admits that said Letters Patent were issued to Defendant on January 27, 1959, and that defendant retains title thereto.

6-8. Plaintiff denies each and every allegation of paragraphs 6, 7 and 8 of the counterclaim.

9. United States Letters Patent 2,870,943 are invalid and void for each of the following reasons:

1. (a) No invention was required to devise the alleged improvements described and claimed in said Letters Patent, in view of the state of the art, and the subject matter thereof was obvious to a person with ordinary skill in the art at the time the alleged invention of said Letters Patent was made.

[10] (b) The disclosure and claims of said Letters Patent are vague, indefinite, ambiguous, uncertain and incomplete, and are not in such clear, concise, and exact terms as to enable persons skilled in the art to make and use the alleged invention.

(c) The claims of said Letters Patent are not based on the disclosure of the application for Letters Patent as originally filed, and are invalid and void because of the overclaiming of the alleged invention.

(d) Patentee Baxter I. Scoggin, Jr. failed to make with respect to the claims of said Letters Patent the oath required by the Patent Act of 1952, 35 U.S.C. 115 and Rule 67 of the Rules of Practice of the United States Patent Office.

(e) The result produced by the association of elements described and claimed in said Letters Patent is not a product of the combination of said elements but is a mere aggregation of several effects, each and all of which several effects as well as the elements necessary for their production were matters of common knowledge among those skilled in the art to which said Letters Patent relate before the alleged invention thereof by said patentee and more than

one year prior to the date of the application for said Letters Patent and do not represent patentable combinations but only aggregations of old and well-known elements.

(f) The said Baxter I. Scoggin, Jr. was not the original and first inventor of the alleged improvements described and claimed therein, but the same, in all of their material and substantial parts, were invented by others, were known to and used by others, and were communicated to the said Baxter I. Scoggin, Jr. by others before his alleged invention and discovery thereof, [11] were patented and described in printed publications in this and foreign countries before his alleged invention or discovery thereof, and more than one year prior to his application for patent, and were in public use and on sale in this country for more than one year prior to his said application.

2. The patents and printed publications referred to, insofar as they have presently been ascertained, are as follows:

| Number | Date | Patentee |
|---|---|---|
| U.S.P. 1,714,874 | May 28, 1929 | Hothersall |
| U.S.P. 2,024,570 | December 17, 1935 | Fischman |
| U.S.P. 2,119,884 | June 7, 1938 | Lohse |
| U.S.P. 2,362,080 | November 7, 1944 | Martin |
| U.S.P. 2,434,875 | January 20, 1948 | Turnbull et al |
| U.S.P. 2,568,057 | September 18, 1951 | Cotter |
| U.S.P. 2,586,687 | February 19, 1952 | Mellon |
| U.S.P. 2,684,182 | July 20, 1954 | Gey |
| U.S.P. 2,715,480 | August 16, 1955 | Livingstone |
| U.S.P. 2,763,402 | September 18, 1956 | Livingstone |
| U.S.P. 2,844,290 | July 22, 1958 | Slade |
| U.S.P. 2,846,124 | August 5, 1958 | Stewart et al |
| U.S.P. 2,861,839 | November 25, 1958 | Mellon |
| U.S.P. 2,956,509 | October 18, 1960 | Cooprider et al |
| British 737,210 | Published September 21, 1955 | Universal Metal Products, Ltd. |

Modern Packaging October 1947, Vol. 2, No. 2 - Pages 126, 127.

3. The instances of prior invention, prior knowledge and use by others, and prior public use and sale, above referred to, insofar as they have been ascertained at present, are as follows:

(a) By the patentees of the patents and by the author of the publication set forth above, at the place set forth in the patents and publications listed therein, and elsewhere in the United States.

(b) By plaintiff and its affiliated companies and their officers and employees at Los Angeles, California, [12] and elsewhere in the United States.

(c) By Paul A. Marchant, a resident of Kansas City, Missouri, at Kansas City, Missouri.

(d) By others presently unknown to plaintiff whose names plaintiff asks leave to add to this answer when it shall have ascertained the same.

4. Plaintiff further avers that by reason of the proceedings in the United States Patent Office during the prosecution of the application which resulted in the Letters Patent in suit, and the admissions and representations made by or on behalf of the applicant in order to induce the grant of said Letters Patent, the defendant is estopped to claim for the Letters Patent in suit a construction such, were the same otherwise possible, as to cause it to cover any act of plaintiff.

5. The claims of said Letters Patent are ambiguous and if such ambiguity can and shall be truly, correctly and lawfully resolved by reference to the specification of said patent, the proceedings in the Patent Office leading to the grant of said patent, and to the art existing at and prior to the alleged invention of the subject matter of said claims by the said patentee, said claims and each of them will be legally susceptible only of such narrow interpretation, meaning and scope that no act done or intended to be done by plaintiff can justly and lawfully be held to constitute infringement of any of said claims.

WHEREFORE, plaintiff prays:

1. That the counterclaim be dismissed.

[13] 2. That plaintiff have its costs and attorneys' fees and also such other and further relief as may be just.

Morrison, Hecker, Buck & Cozad
By W. H. Curtis
1701 Bryant Building (VI 2-5910)
Kansas City 6, Missouri
Attorneys for Plaintiff

Of Counsel:

Francis G. Cole
Watson, Cole, Grindle & Watson
815 Fifteenth Street N.W.
Washington 5, D.C.

---

[14]

## COMPLAINT

(Filed in United States District Court on October 5, 1960)

IN THE UNITED STATES DISTRICT COURT FOR
THE WESTERN DISTRICT OF MISSOURI
WESTERN DIVISION

| | |
|---|---|
| COLGATE-PALMOLIVE COMPANY, Plaintiff, v. COOK CHEMICAL COMPANY, Defendant. | Civil Action No. 13006 |

Plaintiff, complaining of defendant, respectfully alleges:

1. Plaintiff, COLGATE-PALMOLIVE COMPANY, is a corporation duly organized and existing under the laws of the State of Delaware, and has offices at New York City, in the County of New York and State of New York.

2. Defendant, COOK CHEMICAL COMPANY, is a corporation organized and existing under the laws of the

State of Missouri, having a place of business at Kansas City, County of Jackson and State of Missouri.

3. This is a suit brought for a declaratory judgment in reference to a United States patent under 28 U.S.C. Section 2201, and the jurisdiction of this court arises under the Patent Statutes of the United States and 28 U.S.C. Sections 1338 and 1391.

[15] 4. This action arises from an actual controversy now existing between plaintiff and defendant as to the alleged infringement by plaintiff of the United States Letters Patent No. 2,870,943, granted January 27, 1959, upon an application of Baxter I. Scoggin, Jr., for "Pump-Type Liquid Sprayer Having Hold-Down Cap."

5. Defendant has represented itself to be the owner of the entire right, title and interest in and to said Letters Patent.

6. Defendant has, by a letter dated August 3, 1960, a copy of which is hereto annexed and marked "Annex A," charged plaintiff with infringement of defendant's alleged rights under said Letters Patent by reason of plaintiff's use of plastic sprayers and dispensers in connection with plaintiff's "Kan-Kil" products which plaintiff has sold.

7. Plaintiff has purchased plastic sprayers and dispensers from Calmar, Inc., and has used them in connection with plaintiff's "Kan-Kil" products which plaintiff has sold, and intends to continue to purchase such plastic sprayers and dispensers from Calmar, Inc., and to continue to use them in connection with its "Kan-Kil" products which plaintiff intends to continue to sell.

8. Plaintiff denies that it has infringed said Letters Patent No. 2,870,943, or any rights of defendant thereunder by its use of the liquid sprayers and dispensers, which it has purchased from Calmar, Inc., in connection with plaintiff's "Kan-Kil" products, and its sale of said products, or otherwise.

[16] 9. Plaintiff alleges that said Letters Patent No. 2,870,943 are not good nor valid in law, and that the same are invalid and void.

10. Plaintiff has denied to defendant the existence of any liability on the part of plaintiff to defendant based on said Letters Patent 2,870,943, wherefore by reason of the notice of infringement which defendant has served on plaintiff, and the resulting commercial and financial uncertainty incident to the manufacture, use and sale by plaintiff of its accused products aforesaid, an actual controversy has arisen and exists at the present time between plaintiff and defendant.

WHEREFORE, Plaintiff prays:

1. That this Court grant and enter a judgment or decree declaring said United States Letters Patent No. 2,870,943 to be invalid and void.

2. That this Court grant and enter a judgment or decree declaring that the said Letters Patent No. 2,870,943 are not infringed by plaintiff.

3. That this Court grant and enter a judgment or decree declaring that it is the right of plaintiff to continue to make, use and sell products including sprayers and dispensers of the type and structure heretofore used and sold by it as set forth herein, without any threats or interference whatsoever by or from defendant, its assigns or successors in title to said Letters Patent, based on or arising out of the ownership of said Letters Patent or any interest therein, either directed against plaintiff or its suppliers or customers.

[17] 4. That defendant, its agents, officers and employees, temporarily during the pendency of this action and permanently after final hearing, be enjoined from charging or asserting as to plaintiff or its suppliers or its customers that the manufacture, use or sale of said sprayers and dispensers, either as such or as part of a product, is in violation of or infringes upon defendant's patent rights under said Letters Patent.

5. That the costs of this action be assessed against defendant.

6. That plaintiff have such other and further relief as justice may require.

/s/ Lathrop, Righter, Gordon & Parker
Attorney for Plaintiff
By /s/ Howard A. Crawford

Of Counsel:

Trenton Meredith
Colgate-Palmolive Company
300 Park Avenue
New York 22, New York
George H. Mortimer
Colgate-Palmolive Company
300 Park Avenue
New York 22, New York

---

[18] ANSWER TO COMPLAINT

(Filed in United States District Court on November 30, 1960)

COMES NOW defendant, Cook Chemical Company, and for answer to the complaint, states as follows:

1. Defendant admits the allegations of paragraphs 1 to 7 inclusive, of the Complaint.

2. Answering paragraph 8 of the Complaint, defendant alleges that plaintiff has infringed U. S. Letters Patent No. 2,870,943 by its use of liquid sprayers and dispensers which it has purchased from Calmar, Inc., in connection with plaintiff's "Kan-Kil" products, and its sale of said products and otherwise.

3. Answering paragraph 9 of the Complaint, defendant alleges that said Letters Patent No. 2,870,943, is good and valid in law.

4. Answering paragraph 10 of the Complaint, defendant alleges that plaintiff is liable to defendant for infringement

of said Letters Patent No. 2,870,943, but admits that an actual controversy has arisen and exists at the present time between plaintiff and defendant.

[19] COUNTERCLAIM AGAINST PLAINTIFF

For counterclaim against the plaintiff, Colgate-Palmolive Company, the defendant, Cook Chemical Company, says:

COUNT I

1. Defendant is a corporation of the State of Missouri having a place of business at Kansas City, County of Jackson, State of Missouri.

2. Plaintiff is a corporation of the State of Delaware, having a place of business at New York City in the County of New York, State of New York, and is before this Court as petitioner in the Complaint against defendant.

3. That this court has jurisdiction of this Counterclaim and of the parties because the cause arises under the patent laws of the United States, and U. S. Code, Title 28, Section 1338 (a); and Title 28, Section 1400 (b), as more fully hereinafter appears.

4. That United States Letters Patent No. 2,870,943, was duly and legally issued on January 27, 1959, to defendant as assignee, for a "PUMP-TYPE LIQUID SPRAYER HAVING HOLD-DOWN CAP", and that defendant retains all rights and title to said patent.

5. That defendant is informed and believes, and on information and belief alleges, that plaintiff, within six (6) years prior to the filing of this Counterclaim, within the District of this court and elsewhere in the United States, infringed and is still infringing said patent by manufacturing, using and/or selling sprayers embodying the inventions patented by said Letters Patent unlawfully and without license from defendant, and will continue to infringe unless enjoined by this court.

[20] 6. That defendant is informed and believes, and upon information and belief alleges, that plaintiff has committed

the aforesaid acts of infringement in knowing, wanton and deliberate disregard of the rights of defendant.

7. That plaintiff had actual knowledge of said patent at the time of issuance thereof and during the commission of said acts of infringement.

---

[21] PLAINTIFF'S REPLY TO DEFENDANT'S COUNTERCLAIM

(Filed in United States District Court on February 18, 1961)

I

Comes now plaintiff Colgate-Palmolive Company and for its reply to Count I of defendant's counterclaim, alleges and states:

FIRST DEFENSE

Said Count I fails to state a claim against plaintiff upon which relief can be granted.

SECOND DEFENSE

1. Plaintiff admits the allegations of paragraphs 1, 2, and 3 of Count I of defendant's counterclaim.

2. Plaintiff denies each and every allegation of paragraphs 4, 5, 6, and 7 of Count II of defendant's counterclaim.

WHEREFORE, plaintiff prays:

1. That Count I of said counterclaim be dismissed.

2. That plaintiff have and recover its costs and attorneys' fees and also for such other and further relief as may to the Court seem just and proper.

---

[22] ORDER SUSTAINING MOTION TO CONSOLIDATE THE CASE OF CALMAR, INCORPORATED vs COOK CHEMICAL COMPANY, NO. 12349 WITH THE FIRST COUNT OF THE CASE OF COLGATE-PALMOLIVE vs COOK CHEMICAL COMPANY, No. 13006.

(Filed in United States District Court on December 28, 1961)

IN THE UNITED STATES DISTRICT COURT FOR THE WESTERN DISTRICT OF MISSOURI
WESTERN DIVISION

| | |
|---|---|
| CALMAR, INCORPORATED, Plaintiff, v. COOK CHEMICAL COMPANY, Defendant. | No. 12349 |
| COLGATE-PALMOLIVE COMPANY, Plaintiff, v. COOK CHEMICAL COMPANY, Defendant. | No. 13006 |

Defendant's Motion to Consolidate the above entitled causes coming on for consideration, is by the court sustained, and the case of Calmar, Incorporated vs Cook Chemical Company, No. 12349, is consolidated with the first count of the case of Colgate-Palmolive Company vs Cook Chemical Company, No. 13006, for the purposes of trial.

A trial upon the issues raised in the remaining counts of the case of Colgate-Palmolive Company vs Cook Chemical Company, No. 13006, will be deferred until the question of the validity of the patent involved in the cases has been determined.

[23] The cases are hereby set for trial on Monday, March 5, 1962, upon the issues involved in the consolidated cases.

Richard M. Duncan
Judge

Dated: December 28, 1961

[24] ORDER ADMITTING INTO EVIDENCE PLAINTIFF'S EXHIBITS ZZ AND AAA.

(Filed in United States District Court on April 4, 1962)

Come now the attorneys for plaintiffs in the above action and present to the Court their Motion for an order reopening the hearing in the above case and confirming admission of evidence, and it appearing that defendant agrees to the granting of said motion and that all parties to the above action agree that the Stipulations attached to plaintiffs' Motion and marked Plaintiffs' Exhibits ZZ and AAA should be in evidence and were treated and referred to by the parties and the Court as a part of the trial record at the time evidence was being presented to the Court; and it further appearing to the Court that the said Stipulations became a part of the record upon being filed with the Clerk of the Court but that it may be desirable to confirm that the said Stipulations are in evidence and are a part of the trial record in this matter;

[25] THEREFORE, it is hereby ordered as follows:

1. That the trial of the above matter is reopened solely for the purpose of confirming the admittance of Stipulations marked Exhibits ZZ and AAA into evidence;

2. That said Stipulation marked Plaintiffs' Exhibit ZZ be admitted into evidence as Plaintiffs' Exhibit ZZ and is a part of the trial record of this matter;

3. That said Stipulation attached to plaintiffs' Motion and marked Plaintiffs' Exhibit AAA be admitted into evidence as Plaintiffs' Exhibit AAA and is a part of the trial record of this matter.

R. M. Duncan
District Judge

Approved:

W. H. Curtis
Morrison, Hecker, Cozad & Morrison
1701 Bryant Building (VI 2-5910)
Kansas City 6, Missouri
Attorneys for Plaintiff Calmar,
Incorporated, in Action No. 12,349

Howard A. Crawford
Lathrop, Righter, Gordon & Parker
15 West Tenth Street (VI 2-0820)
Kansas City 5, Missouri
Attorneys for Plaintiff Colgate-Palmolive Company in Action No. 13,006

Gordon D. Schmidt
Hovey, Schmidt, Johnson & Hovey
1816 Federal Reserve Bank Building
Kansas City, Missouri
Attorneys for Defendant Cook Chemical Company in Actions Numbered 12,349 and 13,006

---

[26] MEMORANDUM OPINION, FINDINGS OF FACT, AND CONCLUSIONS OF LAW.

(Filed in United States District Court on June 19, 1963)

IN THE UNITED STATES DISTRICT COURT FOR THE WESTERN DISTRICT OF MISSOURI
WESTERN DIVISION

| | |
|---|---|
| CALMAR, INCORPORATED, Plaintiff, v. COOK CHEMICAL COMPANY, Defendant. | No. 12349-3 |
| COLGATE-PALMOLIVE COMPANY, Plaintiff, v. COOK CHEMICAL COMPANY, Defendant. | No. 13006-3 |

This is a declaratory judgment action instituted by the plaintiff, Calmar, Incorporated, against the defendant Cook

Chemical Company, asking this court to declare that U. S. Patent No. 2,870,943 issued to Baxter I. Scoggin, Jr., on January 27, 1959, and presently owned by defendant Cook Chemical Company is invalid and not infringed by plaintiffs.

A similar declaratory judgment action was brought by the plaintiff Colgate-Palmolive Company against defendant Cook Chemical Company asking for the same judicial determination relative to the Scoggin patent.

[27] In its answers, defendant admitted the jurisdiction of this court, and the existence of a justiciable controversy. The defendant also counterclaimed in each action, seeking a declaration of validity of its patent and a finding of infringement by plaintiffs' commercial device.

In the Colgate-Cook case, the defendant's counterclaim also alleged unfair competition as well as infringement on the part of Colgate. The two actions were consolidated for trial on the issues of validity and infringement only. Trial of the unfair competition issue raised in Cook's counterclaim against Colgate was deferred pending a determination of the issues of validity and infringement.

The patent involves a pump spray device designed to be inserted into bottles or other containers for the dispensing of liquid contained therein. The particular device with which we are concerned here, is a screw cap designed to hold down the plunger of said spray pump when it is inserted in a bottle so as to prevent leakage and breakage while being shipped from processor, or while on the shelves of stores where such commodities are offered for sale.

The sprayers which were manufactured by Calmar and later by Bakan, were used by defendant prior to the Scoggin patent, was a simple device made of rigid plastic. It consisted of seven separate elements; (1) a chamber approximately 1-3/4" long, and 1/2" in diameter; (2) a disk was sealed to the top [28] of this element with an opening therein corresponding in size to the opening in the chamber. The lower end of the chamber was formed into a bottle neck design, and the opening at the end thereof was smaller than the opening in the top of the chamber.

Into this opening was inserted (3) a plastic barrel of sufficient length to extend to the bottom of the container.

The disk at the top of the chamber was so designed and sized as to enable it to be secured to the inside of the threaded container cap of metal or plastic material. The container cap possessed an opening in the top surface to correspond to the opening in the disk and chamber itself.

(4) A collar smaller than the container cap with an opening therein corresponding in size to the openings in the chamber and disk and the container cap was secured to the top of the container cap. This collar extended slightly above the container cap.

(5) A small coil spring was inserted into the chamber and rested upon the shoulder created in the sides of the opening near the lower end thereof.

(6) A plunger approximately 2″ long was inserted into the chamber through the openings in the collar and the container cap to contact the coil spring therein. Upon the top of this plunger was secured the (7) sprayer head containing an orifice through which the fluid was expelled. [29] The top of the sprayer head was formed into a "saddle" to accommodate a finger or thumb of the hand. Thus assembled, the sprayer pump was inserted into the bottle and secured thereto by means of the threaded cap. When the plunger was actuated by being pressed downward by the finger or thumb, the fluid in the container was drawn through the barrel and chamber and forced through the orifice in the form of spray. When the sprayer was attached to the container, the plunger and sprayer head projected about 1-1/2″ above the top of the container.

Defendant Cook Chemical has been engaged in the manufacture and sale of household insecticides since 1945, and sold its product under the trade name, "Real Kill". Prior to 1954, the insecticide industry largely was made up of a number of small packagers scattered throughout the country.

Plaintiff Colgate was in the market prior to 1958 with 6 and 12 ounce Aersol cans, but did not enter the household insecticide market with a package including pump sprayer until 1958, when it came into the market with "Kan Kill" which immediately came into competition with defendant's product, "Real Kill".

Prior to the patented sprayer coming on the market in 1957, most of the manufacturers and distributors of household insecticide chemicals used the type sprayer which has heretofore been described, and attached it to their bottles [30] or containers by means of pasteboard or plastic holder. This was necessary as the products could not be successfully handled with the sprayer in place, due not only to breakage but leakage in shipment and while the bottles were on the shelves of the merchants before sale.

With respect to insecticides, the evidence reveals that the chemicals used by the parties in the manufacture of these products caused the material to be extremely fluid and susceptible to leakage. Due to this, a much tighter seal was required for them than for starch, wave set, leaf polish and moth spray. The container when in shipment or displayed for sale had a separate cap which was removed by the purchaser who then inserted the sprayer.

This practice had also presented problems of breakage and handling to the manufacturers and merchandisers as the sprayers were occasionally damaged or lost. This condition continued to plague the manufacturers of the sprayer and sellers of insecticides particularly, during all of the period prior to the Scoggin invention.

Defendant purchased sprayers for its products from plaintiff and some time prior to 1956, had urged upon Calmar the desirability of making a shipping sprayer that could be put in place before shipment. As early as 1951-'52 Calmar made what has been referred to in the evidence as its SS 25 LP, the head of which, when depressed and turned, would lock into the collar attached to the container cap.

[31] It did not prove to be satisfactory, and did not get far beyond the experimental stage. It leaked down the stem and did not solve the breakage problem. (Deft. Ex. 26). During this period plaintiffs had expended considerable time, effort and money in an attempt to develop a successful shipper-sprayer, but had not met with any substantial success.

In 1956 the defendant organized a company known as "Bakan" and began the manufacture of its own sprayers. Sprayers were not a patented device, and defendant's sprayer did not differ from the Calmar sprayer.

Between the time the defendant began to manufacture its own sprayers in 1956, and March 4, 1957, the patentee, B. I. Scoggin, Jr., devoted his time trying to find a solution to the problem of leakage and breakage. His efforts finally culminated in the patent that is now in dispute. The application therefor was filed on the above date. It was a simple device, but apparently solved the problem of breakage in shipping and leakage.

In his patent Scoggin utilized the Bakan sprayers which were currently being manufactured by it. The only structural change made in the sprayer was to redesign the collar attached to the container cap so as to form the lower portion of the inner seal and to provide threads around the collar to conform to the threads in the hold-down cap. By securing the hold-down cap to the collar the sprayer head was caused to be [32] depressed and covered, and thus shielded from breakage. An inner seal was also formed between the hold-down cap and the collar which prevented leakage.

In his specifications, patentee described his invention as follows:

"Pump-Type liquid sprayer having hold-down cap."

"DESIGNATION OF PATENT"

"This invention relates to improvements in structures for dispensing liquids wherein is provided a spray-type hand pump mounted within a container for the liquid through use of the closure cap of such container.

It is common practice, as exemplified for example by Patent No. 2,362,080, issued November 7, 1944, to dispense various types of liquids such as insecticides, through use of a finger manipulated spray pump normally sold as a component part of the container itself. The pump includes a vertically reciprocable plunger extending upwardly beyond the top of the cap within which the pump is mounted and provided with a spray head or nozzle structure capable of emitting a fine mist-like spray when the plunger is depressed by engagement with a finger receiving saddle forming a part of the spray head.

Difficulties have been experienced in the field by virtue of the inherent nature of such structure since accidental actuation of the plunger causes dispensing of the fluid and oftentimes the material is used in part by store employees prior to sale because of the ready accessibility to the pump itself.

It is the most important object of the present invention, therefore, to provide structure for rendering the pump inoperable during shipment and while in storage, as well as on the shelves of the retail dealer.

Another important object of the present invention is to provide structure capable of carrying out the functions above set forth which is also adapted to enclose the head of the plunger and thereby protect the same, as well as handlers of the merchandise by virtue of the fact that the said plunger is completely enclosed and held at the innermost end of its reciprocable path of travel."

[33] The Patentee claimed for his patent in Claims 1 and 2:

"1. In a closure assembly for an open-top container having a perforated cap over said open top thereof mounting a spray unit including a barrel provided with a tubular extension passing coaxially upwardly through the perforation in said cap, a plunger reciprocably carried by the barrel and normally extending therebeyond and a spray head on the upper end of the plunger above said extension, the combination with said spray unit of an annular retainer telescoped over and secured to the extension above said cap and provided with external, circumferentially disposed screw threads and an annular, continuous segment at the upper part of the retainer above said screw threads, and a cup-shaped hold-down member housing the head and holding the plunger depressed at substantially the innermost path of travel thereof within the barrel, said member being provided with internal screw threads complementally engaging said screw threads on the retainer and having an internal, circumferentially extending, continuous shoulder disposed to engage said segment around the entire periphery thereof and thereby present a liquid-tight seal located between the spray head and said threads on the retainer

and said member respectively, said shoulder being spaced from the lower annular peripheral edge of the member a distance at least slightly less than the distance from that portion of said segment normally engaged by said shoulder, to the proximal upper surface of the cap whereby said lower edge of the member is maintained out of contacting relationship with the cap when the member is on the retainer in a position with said shoulder in tight sealing engagement with the segment.

2. A closure assembly as set forth in claim 1 wherein one of the normally interengaged surfaces of the shoulder and segment respectively is substantially conical to present an inclined annular face coaxial with the member and said retainer and of sufficient diameter at the largest end thereof to cause the seal effected between the shoulder and said segment to become tighter as the shoulder slides on said segment during shifting of the member toward the cap."

The purpose of the Scoggin patent is that of converting the old side-mounted sprayer into a shipper sprayer. In order to achieve this end, two things had to be accomplished. [34] First, the sprayer head and plunger had to be protected from damage. Second, the unit had to be sealed to prevent leakage of the contents. To achieve this the collar on the top of the container cap was modified and the hold-down cap was added.

To the existing collar two new elements were added. First, screw threads were added to the side so that they would engage those on the inside of the hold-down cap. Secondly, a circular rib or lip around the top of the collar was added to establish a seal with a complementary lip inside the hold-down cap.

The hold-down cap included first, internal screw threads which would engage those added to the side of the collar, and secondly, a circular inner shoulder which would engage the rib or lip added to the top of the collar. Finally, the cap was constructed so that when screwed into place on the collar it would depress the sprayer, completely enclosing it, providing the required protection. A space is provided between the lower surface of the hold-down cap

and the container cap so that there is no contact between such surfaces.

The rib on the collar and the shoulder in the cap provide the seal. The threads on the side of the collar and those inside the cap serve to secure the cap to the collar, thus enclosing, depressing and protecting the sprayer. With the cover cap secured to the collar, any forces applied to the cap would be transmitted to the collar and not to the sprayer head and the plunger.

[35] Defendant's patent is limited to the combination of the old sprayer with these modifications and additions.

The file wrapper reveals that numerous claims were filed, denied, cancelled and amended before Claims 1 and 2, among others, were finally allowed.

The defendant began to manufacture sprayers embodying its invention in 1956, and at first it encountered some difficulty with leakage at the seal. Some modifications were made in the structure, and the evidence clearly and unequivocally reveals that thereafter the problems, both of leakage and breakage were solved. It immediately enjoyed trade and customer acceptance and its commercial success was assured. The defendant's product with sprayer inside of the container was then for the first time marketed as an integrated unit.

The hold-down cap on defendant's sprayer was screwed to the collar by the assembling machinery at the time of manufacture. This depressed the spray head and established the seal. When the products were bottled the sprayer was inserted and screwed down onto the top of the container. The merchandise was then ready for shipment. In following this procedure the seal formed by the collar and cap were unbroken between the time of final assembly of the sprayer and the first use by the ultimate customer.

[36] Thus Bakan had produced a sealed and protected sprayer unit which the manufacturer need only screw onto the top of its container in much the same fashion as a simple metal cap.

Plaintiffs' contention is that defendant's claims lack invention, and that every element of the claims in suit is disclosed in the prior art, and that every combination or sub-combination recited in the claims can be found in the

prior art. Plaintiffs also deny that either Calmar's patent or the accused device infringes.

§103, Title 35, U. S. C. A. provides:

> "A patent may not be obtained though the invention is not identically disclosed or described as set forth in section 102 of this title, if the differences between the subject matter sought to be patented and the prior art are such that the subject matter as a whole would have been obvious at the time the invention was made to a person having ordinary skill in the art to which said subject matter pertains. Patentability shall not be negatived by the manner in which the invention was made."

Therefore, the question is—was the combination of the admittedly old and known elements employed by Scoggin in accomplishing the result which he set out to achieve, invention, or was it merely the result of mechanical skill?

At first glance the mere simplicity of the idea would seem to present a very close question, but it must be remembered that we are dealing with a situation that had long given trouble to those who were engaged in that business, and who were familiar with the problem and art.

[37] The manufacturers of sprayers had not been able to solve the problem of leakage and breakage in the shipment of the products with which their spray pumps were used. Numerous ideas had been suggested by Calmar, the experiments were made, but none of them solved the problem. These facts and circumstances certainly must lead us to seriously doubt that it was so simple a mechanical problem as it seems now that it has been solved. However, simplicity and obviousness after the event do not negative invention. *Goodyear Co.* v. *Ray-O-Vac Co.*, 321 U. S. 275 and cases cited in note 4, p. 279.

Now that it has been solved, one trained in mechanics and in the art might say, "Well, that was a very simple problem and should easily have been solved", but the fact that many people were thinking about and working on it, and were unable to come up with the answer, raises it above the principle of mere simplicity. Hindsight is generally 20-20.

When the application was before the Patent Office, there were five patents cited, including Lohse, June 7, 1938, No. 2,119,884. Plaintiffs have cited two others that were not before the examiner.

Certainly there is nothing new about the use of hold-down caps on bottles. The Lohse patent which employed a hold-down cap, was dated in 1938, but the evidence reveals that it was not commercial at that time, has not been in use for many years. Lohse's cap would not solve the problem that was faced by the manufacturers and sellers of insecticides.

[38] It is true that Lohse's cap contained threads therein which corresponded to threads on a collar above the container cap, just as there are threads on the collar of the sprayer with which we are concerned here. But, the bottom or the skirt of the cap in Lohse forms a seal with a gasket of some substance, apparently leather, which rests on the upper surface of the container cap. There are no seals above the threads and below the sprayer head. This form of contact between the end of the hold-down cap and the top of the container would not solve the problem of leakage.

There is no thought or contention in this case about there being anything novel or new about the hold-down cap or the threads therein corresponding to the threads on the collar. In defendant's teachings and in its claim it is provided that:

> "* * * *said shoulder being spaced from the lower annular peripheral edge of the member a distance at least slightly less than the distance from that portion* of said segment normally engaged by said shoulder, to the proximal upper surface of the cap whereby said *lower edge of the member is maintained out of contacting relationship with the cap when the member is on the retainer in a position with said shoulder in tight sealing engagement with the segment.*" (Emphasis supplied)

Much has been said by the plaintiffs about this language in the claim and they insist that such a space is not invention. In simple language, all that is meant by this rather complicated language is that there is a space between the

lower edge of the hold-down cap and the container cap in order to permit [39] the hold-down cap to be screwed down on the collar and form a solid seal between the inner shoulder of the collar and the inner groove of the cap. Certainly without a space so described, there could be no inner seal within the cap, but such a space is not new or novel, but it is necessary to the formation of the seal within the hold-down cap.

To me this language is descriptive of an element of the patent but not a part of the invention. It is too simple, really, to require much discussion. In this device the hold-down cap was intended to perform two functions—to hold down the sprayer head and to form a solid tight seal between the shoulder and the collar below. In assembling the element it is necessary to provide this space in order to form the seal.

A patent shall be presumed valid. The burden of establishing invalidity of a patent shall rest on a party asserting it. 35 U. S. C. A. §282. The Supreme Court applied this statutory rule in *Mumm* v. *Decker & Sons*, 301 U. S. 168, where it said:

> " 'For the grant of letters patent is *prima facie* evidence that the patentee is the first inventor of the device described in the letters patent and of its novelty. Smith v. Goodyear Dental Vulcanite Co.. 93 U. S. 486; Lehnbeuter v. Holthaus, 105 U. S. 94'. The issue of the patent is enough to show, until the contrary appears, that all the conditions under which a discovery is patentable in accordance with the statutes have been met. Hence, the burden of proving want of novelty is upon him who avers it. Walker on Patents, §116. Not only is the burden to make good this defense upon the party [40] setting it up, but his burden is a heavy one, as it has been held that 'every reasonable doubt should be resolved against him.' Id., Cantrell v. Wallick, supra; Coffin v. Ogden, 18 Wall 120, 124; Barbed Wire Patent, 143 U. S. 275, 284, 285; Adamson v. Gilliland, 242 U. S. 350, 353." (171)

In *Ezee Stone Cutter Mfg. Co.* v. *Southwest Indus. Prod.*, 262 F.2d 183 (C.A. 8, 1958), our own Eighth Circuit

Court of Appeals quoted *Long* v. *Arkansas Foundary Co.*, 247 F.2d 366, 369 (C.A. 8, 1957):

> " 'The issuance of a patent is prima facie evidence of both novelty and utility (see 35 U.S.C.A. §282), and when one attacks a patent he must make good his attack with reasonable clearness. He has the burden of proof, and every reasonable doubt will be resolved against him. Doner v. Sheer Pharmacal Corporation, 8 Cir., 1933, 64 F.2d 217, 221, and cases cited; G. H. Packwood Mfg. Co. v. Louis Janitor Supply Co., 8 Cir., 1941, 115 F.2d 958, 964, 965.
>
> In a case where the patentability of a claimed invention is in issue, evidence of commercial success is admissible and may be forthcoming. In a doubtful case such evidence may turn the scale in favor of the plaintiff. See Donner v. Sheer Pharmacal Corporation, supra, at page 221 of 64 F.2d and cases cited.
>
> In such a case, evidence that the patent device or combination solved a long-felt want and an old problem which had baffled those skilled in the art is also admissible. [Citing cases]' "

As heretofore stated, defendant's patented device met with substantial and extensive commercial success. This is evidenced by the fact that Calmar almost immediately set out to produce an equally successful shipper-sprayer. Commercial success or acceptance is an element that may be taken into consideration [41] in determining the question of invention, but is not necessarily determinative of the issue. *Temco Elec. Motor Co.* v. *Apeco Mfg. Co.*, 275 U. S. 319; *Forestek Plating & Mfg. Co.* v. *Knapp-Monarch Co.*, 106 F.2d 554 (C.A. 6, 1939); *Ezee Stone Cutter Mfg. Co.* v. *Southwest Indus. Prod., supra.*

Another question for determination here is whether or not defendant's invention solved the problem of leakage or breakage in shipment. Unquestionably it did. That is best exemplified by the fact that the plaintiffs adopted and used a device with a seal within the cap almost exactly like that used by the defendant. Thus it meets one of the requirements necessary to an invention, it was useful.

Was it new? The fact that a patent may be composed of old and well known elements, if it performs a new and

useful purpose does not destroy invention. *Parks* v. *Booth*, 102 U. S. 96; *Loom Co.* v. *Higgins*, 105 U. S. 580. As a matter of fact, most of the mechanical patents that come to our attention now are a combination of old and well known elements into new form or composition.

Although hold-down caps had been used for many years, their use on the sprayer was for a special and limited purpose. It was employed in a narrow art, one pertaining primarily to the sealing, shipping and use of insecticides by means of liquefying sprayers.

[42] Several years of study and experimentations had been spent in an attempt to solve this problem; designs had been submitted to the manufacturers and sellers of insecticides. None had been satisfactory. May it not then be said that the design of a sealing element or joint that solved the problem, although it was simple, would be new? Certainly it was new in the art which the problem presented.

By the same reasoning, may it not also be said that if it solved a long-sought need, it was likewise novel? If it meets the requirements of being new, novel and useful it was the subject of invention, although it may have been a short step, nevertheless it was the last step that ended the journey. The last step is the one that wins and he who takes it when others could not, is entitled to patent protection. *The Barbed Wire Patent*, 143 U. S. 275.

It is my conclusion that the defendant's patent is valid.

Following the introduction into the market of its Bakan 2 sprayer pump, the pressure upon Calmar from its customers to produce a better shipper pump than it had theretofore been able to supply, became acute. Calmar's president testified that either he or some member of his organization had seen the Bakan 2 sprayer when it came upon the market in the fall of 1957.

[43] In the early part of 1958, Calmar employed Douglas F. Corsette, who, at the time he testified in this case, was vice-president in charge of engineering and development for Calmar. He had Bachelor and Masters degrees in engineering from Purdue University. Immediately prior to the time he was employed by Calmar he had been in the employ of a company engaged in the construction of an automatic assembly machine for sprayer devices.

In the early part of 1958, he was given the special assignment of designing a sprayer that would meet Calmar's customer requirements. These requirements apparently specified something comparable to that which had been produced by Bakan.

As a result of their study and experiments, Douglas F. Corsette and Rex C. Cooprider produced the accused device and filed an application for a patent on September 9, 1958, which was granted October 18, 1960. While the validity of the Corsette-Cooprider patent is not in issue here, I think for the purpose of understanding plaintiffs' commercial device, it may be well to describe it.

The patent was assigned by Corsette and Cooprider to the Drackett Company of Cincinnati, Ohio. The Drackett Company acquired Calmar, Inc., and Calmar Company was thereafter organized as the sales agency for Drackett Company. The question of the identity and relationship of the respective companies was settled before trial by stipulation of the parties.

[44] The application is entitled, "Fluid Dispensing Pumps" and it stated:

> "This invention relates to new and improved fluid dispensing pumps of the class in which the pump plunger is immobilized in a predetermined position for packing and shipping purposes to avoid inadvertent actuation and discharge of the liquid contents of a container to which such a pump may be applied.
>
> In liquid dispensing pumps adapted for application to and sale with containers for various commercially dispensed liquids, it has been heretofore known, as exemplified by the Lohse U. S. Patent 2,119,884, to utilize a protective cover for immobilizing the pump plunger in a predetermined depressed condition and also for trapping and retaining any liquid that may be inadvertently discharged from the pump. * * * It has been found, however, that in practice a very appreciable amount of liquid may be discharged into such a protective cap due to inversion of the container and/or expansion of its contents. In such case, the liquid may escape either through the usual liquid discharge passage of the plunger and the

plunger head, or between the plunger and the barrel in which it works.

(* * * this is the same patent which was referred to in Scoggin).

It is, accordingly, a primary object of the present invention to provide an improved form of fluid dispensing pump having means for retaining the plunger in immobilized position and including additional means rendered operative by immobilization of the plunger for closing off the plunger discharge passage and at the same time providing a fluid seal or block preventing egress of the liquid between the pump plunger and its associated barrel.

The preferred means for retaining the plunger thus immobilized is a protective hold-down cap which is threaded or otherwise secured to the container over the plunger head to depress the plunger to its immobilized position against spring pressure.

The invention further contemplates that the discharge opening or orifice of the plunger head will be surrounded by a frusto-conical sealing surface for cooperation with a similar frusto-conical interior surface [45] of the protective cap whereby to prevent discharge of fluid from the plunger head into the cap incident to application of the cap and depression of the plunger to its immobilized position, as well as subsequent thereto."

(This designated frusto-conical sealing surface or cap is the same cap that is referred to in Calmar's SS 25 and 40).

The description of plaintiff's patented device is quite lengthy and requires 5-1/2 pages of soft copy.

Calmar's specifications then proceeded to describe the sprayer pump and certain improvements made thereto for the purpose of preventing the fluid from escaping into the cap when the plunger or head of the sprayer head is depressed. With that particular description I am not concerned. because it is not that element of plaintiffs' commercial device which is alleged infringed. The description of this element of plaintiffs' patented device is designated as a "Primary Seal", whereas that portion of plaintiffs'

device with which we are concerned, is contained within the hold-down cap and collar.

There is also fully described in plaintiffs' specifications what we have been referring to as the seal between the threads on the collar attached to the container cap and the top of the hold-down cap. The specifications are spelled out in great detail. Significant of this language, I quote the following:

> "In order to effect a liquid tight sealing engagement between the cap and the collar, the collar is formed with an upwardly presented groove inwardly of its threaded outer wall for reception of a depending annular sealing ring on the cap. The dimensions of the groove and sealing ring are so related that the sealing ring preferably makes a jamming fit into the groove.
>
> [46] It is preferred that the cap be of resilient material in order that its conical interior sealing surface may form a fluid tight sealing engagement with the conical peripheral surface of the spray head and also so that its sealing ring may form a yielding fluid tight fit within the groove.
>
> Where the cap is thus formed of resilient plastic, however, it is subject to the usual and known difficulty that excessive tightening of the cap, as by automatic capping mechanism, may tend to expand the lower edge of the cap skirt so that the threads of the cap will override and become disengaged from the threads on the collar. However, the depending ring or skirt in addition to performing its sealing function, will resist such expansion tendency and thus adapt the resilient material caps for efficient application by automatic capping mechanism."

There are twenty claims in Calmar's invention. Its Claim 11 is particularly significant:

> "In a fluid dispensing pump, the combination with a generally vertical cylindrical pump barrel having at its upper end a collar having threads thereon, of a plunger reciprocally disposed in said barrel and having at its upper end and above said collar a discharge head having a discharge orifice for fluid, spring means acting between said barrel and plunger for urging said plunger

upwardly in said barrel, a check valve associated with said barrel to prevent downward movement of fluid therein, said plunger being forced to provide a discharge passage extending therethrough and communicating with said discharge orifice, a protective cap dimensioned to embrace said discharge head, said cap having a skirt for engagement with the threads on said collar to hold said plunger in a depressed and immobilized position against the action of said spring means, coacting sealing surfaces on said plunger and collar, said sealing surfaces being engaged when said cap is threaded on said collar to seal said barrel to prevent leakage externally of said plunger, means operable when said plunger is depressed and immobilized to seal said discharge passage to prevent leakage internally of said plunger, said last named means comprising a sealing ring surrounding said discharge orifice and having a contour conforming with the contour of the interior surface of said cap and positioned for sealing engagement with said cap in the depressed and immobilized position of said plunger, and coacting sealing surfaces on said cap and collar to contain within said cap liquid escaping from a defective seal either externally or internally of said plunger."

[47] Stripped of the technical language, if I correctly understand the teaching of the Calmar patent, it simply means it has made some improvements in its old basic sprayer by providing seals within the structure of the sprayer thus preventing the escape of fluid when it is in a depressed position.

The accused device is the Calmar SS-40. It conforms in almost all respects to the Corsette-Cooprider patent. As I have said, it contains modifications of the basic sprayer in addition to the hold-down cap and collar elements which are alleged to infringe defendant's patent. These modifications are not in issue here, and it is only the problem solving combination of the collar to cap seal and the hold-down cap that is alleged to infringe.

Specifically, the Calmar seal is formed by a circumferential groove in the top of the collar secured to the container cap and a tongue or projection formed in the hold-down cap to conform to the groove in the collar, so

that when the hold-down cap is screwed down on the collar, the upper tongue is pressed into the lower groove, thus forming a seal. This, in plaintiffs' evidence, is designated a "secondary" seal; also as a "labyrinth" seal, and differs from Scoggin's, which described a square shoulder which comes in contact with the projection or tongue circumferentially formed around the collar.

[48] In the Scoggin patent it may be said that there are three contacting surfaces formed by a union of the above shoulder and the below projecting tongue, whereas in the plaintiffs' accused device, there seems to be four contacting surfaces that are comparable to ordinary tongue-and-groove hardwood flooring.

We may assume, as an ordinary principle of mechanics, that if tongue and grooved objects are precisely scaled, when they are put together, they will form a perfectly tight union; the tongue and groove conforming exactly to each other's dimensions and the outer portions of the groove being perfectly dimensioned to the outer edges or portions of the tongue will likewise form a perfect union, and all coming in contact without any space in any area.

That is not true, I believe with either defendant's patent or plaintiffs' accused device. This may be attributed to manufacturing imperfections and to the type of material used, as it is pliable and subject to distortion under pressure. This characteristic of the material is, to a great degree, responsible for the establishment of the seal.

So far as outward appearances are concerned, plaintiffs' accused device and defendant's patented device are identical, and it is necessary to make a close inspection of the inner portions of the hold-down caps to determine the precise form of the seals.

[49] Structurally, the only significant difference between the collars and hold-down caps of defendant's patent and plaintiffs' accused device is the provision for the shoulder and tongue on defendant's, and the labyrinth on plaintiffs.

Infringement is a question of fact. *Stilz* v. *U. S.*, 269 U. S. 144, *Graver Tank and Mfg. Co. et al.* v. *Linde Air Products Co.*, 339 U. S. 605. The burden of proof is on the party alleging infringement. *Cammeyer* v. *Newton*, 94 U. S. 225, *Bene* v. *Jeantet*, 129 U. S. 683. The test of in-

fringement was set out by the Supreme Court in *Sanitary Refrigeration Co.* v. *Winters,* 280 U. S. 30, at 41-42 where it said:

> "There is substantial identity constituting infringement, where a device is a copy of the thing described by the patentee 'either without variation, or with such variations as are consistent with its being the same thing' *Burr* v. *Duryee,* 1 Wall 531, 537. * * * Generally speaking, one device is an infringement of another 'if it performs substantially the same function in substantially the same way to obtain the same result.' * * * Authorities concur that the substantial equivalent of a thing, in the sense of the patent law, is the same as the thing itself; so that if two devices do the same work in substantially the same way and accomplish substantially the same result, they are the same even though they differ in name, form or shape.' "

Plaintiffs' commercial device, insofar as the sealing in the hold-down cap and the protection of the sprayer head are concerned, perform the same function in substantially the same manner performed by defendant's.

Upon a close inspection of the devices, it is difficult to see how they could be much more similar and yet have any different features.

[50] IT IS THEREFORE my conclusion that plaintiffs' commercial device infringes Claims 1 and 2 of defendant's patent.

Richard M. Duncan
Judge

Dated: June 19, 1963

The parties hereto may submit form of Judgment Entry in accordance herewith within fifteen days.

[51] JUDGMENT

Executed by Judge Duncan
July 31, 1963

IN THE UNITED STATES DISTRICT COURT FOR THE WESTERN DISTRICT OF MISSOURI
WESTERN DIVISION

CALMAR, INCORPORATED,
Plaintiff
v.
COOK CHEMICAL COMPANY,
Defendant
No. 12349-3

COLGATE-PALMOLIVE COMPANY,
Plaintiff
v.
COOK CHEMICAL COMPANY,
Defendant
No. 13006-3

The above entitled actions having been consolidated for trial on the issues of validity and infringement of U. S. Letters Patent No. 2,870,943, and having come on to be heard before the court upon the pleadings, including the complaints and defendant's answers and counterclaims, witnesses having been heard in open court, evidence having been presented, briefs having been filed in behalf of the respective parties, the causes having been fully tried before the court, and the court having entered "MEMORANDUM OPINION, FINDINGS OF FACTS, AND CONCLUSIONS OF LAW" dated June 19, 1963, it is now ORDERED, ADJUDGED, AND DECREED as follows:

1. That Cook Chemical Company, defendant, is the owner of United States Letters Patent No. 2,870,943, issued to it on the twenty-seventh day of January, 1959, in the name of Baxter I. Scoggin, Jr., and entitled "Pump-Type Liquid Sprayer Having Hold-Down Cap".

[52] 2. That Claims 1 and 2 of said Scoggin Patent No. 2,870,943, are good and valid in law.

3. That the plaintiff, Calmar, Incorporated, has infringed Claims 1 and 2 of said patent by the manufacture and sale of its model SS-40 sprayer, and that the plaintiff, Colgate-Palmolive Company, has infringed said Claims 1 and 2 by the use and sale of said model SS-40 sprayer.

4. That plaintiffs are not entitled to any of the relief prayed for in their respective complaints, and that the same are hereby dismissed upon their merits.

5. That plaintiffs, Calmar, Incorporated and Colgate-Palmolive Company, and their officers, agents, servants, employees and attorneys, and all persons in active concert or participation with them or either of them are hereby permanently enjoined and restrained from making, using or selling sprayers of the kind known as Calmar model SS-40, or any other sprayer or device embodying the inventions of Claims 1 and 2 of said Letters Patent No. 2,870,943. The injunctions hereinabove granted in these causes are hereby suspended for a period of 30 days from the date of entry of this judgment.

6. That defendant is entitled to recover damages, together with interest and costs, as provided by title 35 U.S.C. section 284, and to an accounting to ascertain the amount thereof, as a result of the acts of infringement adjudged herein.

7. That these causes may be brought up upon motion of defendant to proceed with such accounting, and for determination of the right of defendant to an award of reasonable attorneys' fees as provided by title 35 U.S.C. section 285, either before the court or such special master as the court may appoint.

[53] 8. This is to certify, pursuant to Rule 54(b) of the Federal Rules of Civil Procedure, that there is no just reason for delay in entering this final judgment for defendant on the issues of validity and infringement of said Letters Patent No. 2,870,943 on Count I of defendant's counterclaim against plaintiff, Colgate-Palmolive Company, on the Complaint of plaintiff, Colgate-Palmolive Company, on defendant's counterclaim against plaintiff, Calmar, Inc.,

and on the Complaint of plaintiff, Calmar, Inc.; and the Court hereby expressly directs the entry of such judgment.

Richard M. Duncan
United States District Judge

---

## [54] ORDER ADMITTING IN EVIDENCE CERTAIN DOCUMENTS and OVERRULING MOTION FOR NEW TRIAL

(Filed in United States District Court on November 4, 1963)

These cases were filed in this court on April 27, 1959, and October 5, 1960, respectively, and thereafter came on for trial beginning March 5, 1962. Following trial before the court, it was taken under advisement, briefs and reply briefs were filed, and finally, on June 19, 1963, the court entered Findings of Fact and Conclusions of Law.

On June 31, 1963, judgment was entered determining the ownership of the Patent involved in the controversy. [55] Thereafter, on August 9, 1963, Motions were filed by each of the plaintiffs, "For a new trial under Rule 59 of the Federal Rules of Civil Procedure or, alternatively, to reopen the record for the purpose of admitting in evidence certain documents attached hereto."

It was contended by the plaintiffs that they had no knowledge or information of the forfeited patents prior to the entering of the judgment in this case, and that they had made timely demand on the defendant for the production of all documents pertaining to the patented device, and that the information, although in the possession of the defendant Cook Chemical Company, was not produced by it.

It is further the contention of the plaintiffs that had these documents been before the court at the time the case was tried, they likely would have changed the results of the court's Findings of Fact and Conclusions of Law. It is defendant's contention that such documents are cumulative.

I have examined the documents attached to plaintiffs' motions, and have re-read the Findings of Fact and Conclusions of Law.

It is my conclusion that had the documents been before the court at the time of the trial, and at the time of the court's findings, that they would not have changed the court's Findings and Conclusions.

[56] It is defendant's further contention that due diligence was not shown by the plaintiffs in bringing these matters to the attention of the court.

I do not believe it is necessary to pass upon that question, and the documents will be admitted.

The court having duly considered plaintiffs' Motions for New Trial, and the briefs in support of and in opposition thereto, said motions are now here overruled.

Richard M. Duncan
Judge

Dated: November 4, 1963

---

[57] NOTICE OF APPEAL TO THE UNITED STATES COURT OF APPEALS FOR THE EIGHTH CIRCUIT

(Filed in United States District Court on November 14, 1963)

IN THE UNITED STATES DISTRICT COURT FOR THE WESTERN DISTRICT OF MISSOURI WESTERN DIVISION

| | |
|---|---|
| CALMAR, INC., Plaintiff, vs. COOK CHEMICAL COMPANY, Defendant. | No. 12349-3 |
| COLGATE-PALMOLIVE COMPANY, Plaintiff, vs. COOK CHEMICAL COMPANY, Defendant. | No. 13006-3 |

Notice is hereby given that Calmar, Inc., and Colgate-Palmolive Company, Plaintiffs above named, hereby ap-

peal to the United States Court of Appeals for the Eighth Circuit from the final judgment entered in this action on the 31st day of July, 1963, on the record as amplified by the Order of the District Court filed November 4, 1963.

Morrison, Hecker, Cozad & Morrison
Attorneys for Plaintiff, Calmar, Inc.
By William H. Curtis
1701 Bryant Building
Kansas City 6, Missouri

[58] Lathrop, Righter, Gordon & Parker
Attorneys for Plaintiff, Colgate-Palmolive Company
15 West Tenth Street
Kansas City 5, Missouri

Of Counsel:

Francis G. Cole
Robert F. Conrad
Watson, Cole, Grindle & Watson
815 Fifteenth Street, N.W.
Washington 5, D. C. 20005

---

[59] (DOCKET ENTRIES IN UNITED STATES DISTRICT COURT IN No. 12349-3)

IN THE DISTRICT COURT OF THE UNITED STATES FOR THE WESTERN DISTRICT OF MISSOURI WESTERN DIVISION

CALMAR, INCORPORATED,
Plaintiff-Appellant.

vs.

COOK CHEMICAL COMPANY,
Defendant-Appellee.

| | | |
|---|---|---|
| Apr. 27, | 1959 | Complaint filed |
| Aug. 14, | " | Answer and Counterclaim filed. |
| Aug. 20, | " | Answer to Counterclaim filed. |

| | |
|---|---|
| Oct. 12, 1960 | Interrogatories by plaintiff to defendant filed. |
| Nov. 16, " | Defendant's answers to interrogatories filed. |
| May 25, 1961 | Defendant's Motion for leave to amend with suggestions in support filed. |
| June 19, " | Plaintiff's Memorandum in opposition to defendant's Motion for leave to amend; supporting affidavits of Bruce S. Shannon and Francis G. Cole filed. |
| July 7, " | Respective parties appear by counsel before the Honorable Richard M. Duncan, Judge, at Kansas City, Missouri, for hearing on motion of defendant for leave to amend answer by adding counterclaim for declaratory judgment. Arguments are made on the motion and submitted to the Court, which takes the matter under advisement. |
| July 19, " | Order overruling Motion for leave to amend filed. |
| Sept. 18, " | Amended answer to counterclaim (with consent of defendant) filed. |
| Oct. 3, " | Motion to consolidate this cause with cause #13006-3 with memorandum in support thereof filed by defendant. |
| Dec. 8, " | Parties appear by counsel for hearing on defendant's Motion to consolidate with causé #13006. Evidence is heard and thereafter the defendant's motion to consolidate is by the court taken under advisement. |
| Dec. 28, " | Order filed. (Motion to consolidate this cause with the first count of case #13006 is by the court sustained.) |
| Jan. 29, 1962 | Stipulation filed. |
| Feb. 5, " | Stipulation filed. |
| Mar 5, " | Respective parties appear by counsel and announce ready for trial. Trial is to the Court. Defendant presents testimony— |

said testimony not being completed at the hour of adjournment, trial to be continued tomorrow, Tuesday, March 6, 1962, at 10:00 A.M.

Mar. 6, " Trial is continued. Defendant continues testimony.
Defendant's testimony not being completed at the hour of adjournment, further proceedings are postponed until tomorrow.

Mar. 7, " Trial is resumed. Defendant continues testimony and rests. Plaintiffs make opening statement. Plaintiffs present testimony. Plaintiffs testimony not completed at the hour of adjournment—Trial to be continued tomorrow.

Mar. 8, " Trial is resumed. Plaintiffs continue testimony. Plaintiffs testimony not completed at the hour of adjournment—Trial to be continued tomorrow.

[60]

Mar. 9, 1962 Trial is resumed. Plaintiffs complete testimony and rest. Defendant presents rebuttal testimony and rests. Upon completion of all the evidence the case is submitted to the Court which takes the matter under advisement. The Court directs that defendant's brief be filed within thirty (30) days from this date. Plaintiffs' brief to be filed fifteen (15) days thereafter, and defendant's reply brief thereto be filed within fifteen (15) days thereafter. *Richard M. Duncan, Judge.*

Apr. 4, " Motion for order reopening hearing and confirming admission of Evidence filed.
Order filed. (granting the admission of evidence)

Apr. 10, " Defendant's Proposed Finding of Fact and Conclusions of Law filed.
Stipulation filed.

May 3, " Plaintiffs' proposed Finding of Fact and Conclusions of law filed.

June 19, 1963 MEMORANDUM OPINION, FINDINGS OF FACT AND CONCLUSIONS OF LAW filed. (Plaintiffs' commercial device infringes Claims 1 and 2 of defendant's Patent—parties to submit form of judgment entry within 15 days)

July 31, " JUDGMENT FILED. (Cook Chemical Company is owner of Letters Patent No. 2870943; claims 1 and 2 of Scoggin Patent No. 2870943 are good and valid. Plaintiff has infringed claims 1 and 2 by the use and sale of model SS-40 sprayer. Plaintiff not entitled to relief prayed for in complaint and complaint is dismissed upon its merit. Plaintiff permanently enjoined and restrained from making, using or selling Calmar model SS-40 sprayer or any sprayer embodying the inventions of claims 1 and 2. Defendant entitled to recover damages with interest and costs as provided by Title 35, U.S.C. Section 284, and to an accounting. These causes may be brought up upon motion of defendant to proceed to such accounting and for determination of the right of defendant to an award of reasonable attorneys' fee, either before court or special Master. The Court further certifies that pursuant to Rule 54(b), there is no just reason for delay in entering this final judgment and expressly directs the entry of such judgment. Injunction suspended for a period of thirty days. *Judge Richard M. Duncan*

Aug. 9, " Motion by Plaintiff for New Trial under Rule 59(b) of the Federal Rules of Civil Procedure or, alternatively, to reopen the record for the purpose of admitting in evidence certain documents attached hereto with affidavits of Robert F. Conrad and Francis G. Cole in support filed.

| | | |
|---|---|---|
| Aug. | 19, " | Affidavit of Gordon D. Schmidt filed. |
| Nov. | 4, " | Order admitting in evidence certain documents and overruling Motion for New Trial filed. |
| Nov. | 14, " | Plaintiff's Notice of Appeal filed. (Service to counsel for the defendant by Plaintiff) |
| | | Plaintiff's Motion for Supersedeas under Rule 62(d) and 73 with suggestions in support filed. |
| | | Motion to suspend injunction pending appeal filed. |
| Dec. | 3, " | Order sustaining Motion to suspend injunction pending appeal and fixing bond at $100,000.00 filed. |
| | | Bond for costs on appeal filed. |
| Dec. | 4, " | Order filed. (It is further ordered that Colgate-Palmolive Company, plaintiff in Cause No. 13006, be and is hereby not required to execute a bond pending appeal: Provided that Calmar, Inc., the Plaintiff in Consolidated Cause No. 12349, shall execute a bond in the sum of $100,000.00, and on the further condition that the appeal be prosecuted expeditiously.) |
| Dec. | 5, " | Bond on Stay of Injunction during appeal filed. |

[61] (DOCKET ENTRIES IN UNITED STATES DISTRICT COURT IN No. 13006-3)

IN THE DISTRICT COURT OF THE UNITED STATES FOR THE WESTERN DISTRICT OF MISSOURI WESTERN DIVISION

COLGATE-PALMOLIVE COMPANY,
Plaintiff-Appellant.

vs.

COOK CHEMICAL COMPANY,
Defendant-Appellee.

| | | |
|---|---|---|
| Oct. 5, | 1960 | Complaint filed. |
| Nov. 30, | " | Answer to Complaint and Counterclaim filed. |
| Feb. 18, | 1961 | Plaintiff's reply to defendant's counterclaim filed. |
| June 13, | " | Interrogatories to Plaintiff filed. |
| July 1, | " | Plaintiff's Interrogatories to defendant filed. |
| Aug. 4, | " | Plaintiff's objections to certain interrogatories filed by defendant with suggestions in support thereof filed. |
| Aug. 7, | " | Answers to interrogatories propounded by defendant filed. |
| Aug. 17, | " | Order filed. (Plaintiff's objection to interrogatory No. 5 is overruled, the objections to interrogatories Nos. 6, 7 and 24 are sustained.) |
| Aug. 21, | " | Objections to certain interrogatories propounded by plaintiff—suggestions in support of objections filed by defendant. Answer to plaintiff's interrogatories filed. |
| Aug. 30, | " | Order sustaining defendant's objections to interrogatories 17(e) and (f) filed. |
| Sept. 8, | " | Plaintiff's answer to defendant's interrogatory No. 5, filed. |
| Sept. 1, | " | Supplemental Interrogatory to defendant filed. |

| | | |
|---|---|---|
| Sept. | 15, " | Answer to plaintiff's supplemental interrogatory to defendant filed. |
| Oct. | 3, " | Motion to consolidate this cause with cause #12349—suggestions in support filed. |
| Nov. | 8, " | Order sustaining objections to interrogatories 45 and 46 filed. |
| Dec. | 8, " | Parties appear by counsel for hearing on defendant's Motion to consolidate with cause No. 12349. Evidence is heard, and thereafter, the defendant's Motion to consolidate is by the Court taken under advisement. |
| Dec. | 28, " | Order filed. (Motion to consolidate Case No. 12349 with the first count of this case is by the court sustained.) |
| Jan. | 29, 1962 | Stipulation filed. |
| Feb. | 21, " | Defendant's Motion under Rule 34 with suggestions in support filed. |
| Mar. | 5, " | Respective parties appear by counsel and announce ready for trial. Trial is to the Court. Defendant makes opening statement. Plaintiff reserves opening statement. Defendant presents testimony—said testimony not being completed at the hour of adjournment, trial to be continued tomorrow, Tuesday, March 6, 1962, at 10:00 a.m. |
| Mar. | 6, " | Trial is continued. Defendant continues testimony. Defendant's testimony not being completed at the hour of adjournment, further proceedings are postponed until tomorrow. |
| Mar. | 7, " | Trial is resumed. Defendant continues testimony and rests. Plaintiffs make opening statement. Plaintiffs present testimony. |
| Mar. | 8, " | Trial is resumed. Plaintiffs continue testimony. |

[62]

Mar. 9, 1962 Trial is resumed. Plaintiffs complete testimony and rest. Defendant presents rebuttal testimony and rests. Upon completion of all the evidence the case is submitted to the Court which takes the matter under advisement.

The Court directs the defendant's Brief be filed within 30 days from this date; Plaintiff's brief to be filed fifteen (15) days thereafter, and Defendant's Reply brief thereto be filed within fifteen (15) days thereafter. *Richard M. Duncan, Judge*

Apr 4, " Motion for Order reopening hearing and conforming admission of evidence filed. Order filed. (Granting the admission of evidence)

Apr. 10, " Defendant's proposed Finding of Fact and Conclusions of law filed.
Stipulation filed.

May 3, " Plaintiffs' proposed finding of fact and conclusions of law filed.

June 1, " Order filed. (Sustaining in part and overruling in part, defendant's Motion to produce)

June 19, 1963 MEMORANDUM OPINION, FINDINGS OF FACT AND CONCLUSIONS OF LAW filed. (Plaintiffs' Commercial device infringes claims 1 and 2 of defendant's Patent—Parties to submit form of judgment entry within 15 days.)

July 31, " JUDGMENT FILED. (Cook Chemical Company is owner of Letters Patent No. 2870943; claims 1 and 2 of Scoggin Patent No. 2870943 are good and valid. Plaintiff has infringed claims 1 and 2 by the use and sale of model SS-40 sprayer. Plaintiff not entitled to relief prayed for in complaint and complaint is dismissed upon its merit. Plaintiff permanently enjoined and restrained from making, us-

ing or selling Calmar model SS-40 sprayer or any sprayer embodying the inventions of claims 1 and 2.

Defendant entitled to recover damages with interest and costs as provided by Title 35, U.S.C. Section 284, and to an accounting. These causes may be brought up upon motion of defendant to proceed to such accounting and for determination of the right of defendant to an award of reasonable attorneys' fee, either before court or special Master. The Court further certifies that pursuant to Rule 54(b), there is no just reason for delay in entering this final judgment and expressly directs the entry of such judgment. Injunction suspended for a period of thirty days. *Judge Richard M. Duncan.*

Aug. 9, " Motion by Plaintiff for New Trial under Rule 59 of the Federal Rules of Civil Procedure or, alternatively, to reopen the record for the purpose of admitting in evidence certain documents attached hereto with affidavit of Jack W. R. Headley filed.

Aug. 19, " Affidavit of Gordon D. Schmidt filed.

Nov. 4, " Order admitting in evidence certain documents and overruling Motion for New Trial filed.

Nov. 14, " Plaintiff's Notice of Appeal filed. Service to counsel for the defendant by Plaintiff.

Plaintiff's Motion for Supersedeas under Rule 62(d) and Rule 73 with suggestions in support filed.

Plaintiff's Motion to suspend injunction pending appeal filed.

Dec. 3, " Order sustaining Motion to suspend injunction pending appeal and fixing bond at $100,000.00 filed.

Bond for costs on appeal filed.

Dec. 4, " Order filed. (It is further ordered that Colgate-Palmolive Company, plaintiff in Cause No. 13006 herein, be and is hereby not required to execute a bond pending appeal: Provided that Calmar, Inc., the Plaintiff in Consolidated Cause No. 12349, shall execute a bond in the sum of $100,000.00, and on further condition that the appeal be prosecuted expeditiously.)

---

[63] TRANSCRIPT OF PROCEEDINGS

IN THE UNITED STATES DISTRICT COURT FOR THE WESTERN DISTRICT OF MISSOURI WESTERN DIVISION

CALMAR, INCORPORATED,
Plaintiff,
vs
COOK CHEMICAL COMPANY,
Defendant.
No. 12349

COLGATE-PALMOLIVE COMPANY,
Plaintiff,
vs
COOK CHEMICAL COMPANY,
Defendant.
No. 13006

* * *

[65] Mr. Headley: Your Honor, we would like to make one further statement right at the opening of this case, and I make this on behalf of the plaintiff Colgate: We would like to have the understanding and the permission of the Court that any evidence adduced by the plaintiff Calmar in this case shall also be taken and considered as evidence of the plaintiff Colgate.

The Court: That is as to the patent?

Mr. Headley: Also on these questions of infringement.

The Court: That is what I mean.

Mr. Headley: And any objections made by the plaintiff Calmar in this case or stipulations or statements will also be considered as made by the plaintiff Colgate unless otherwise excepted to.

The Court: Is that agreeable?

Mr. Schmidt: That is agreeable, your Honor.

The Court: Very well.

* * *

[80] DEFENDANT'S CASE

Whereupon, the defendant, to sustain the issues in its behalf, offered testimony, oral and documentary, and made the following admissions, to-wit:

[81] Mr. Schmidt: I will call Mr. Ralph Martin to the stand.

RALPH G. MARTIN,

being produced, sworn and examined as a witness on behalf of the defendant, testified as follows:

Direct Examination by Mr. Schmidt.

Q. Will you state your name and address, please? A. Ralph G. Martin, 221 West 48th Street, Kansas City, Missouri.

Q. You are associated with Cook Chemical Company as president, is that not correct? A. Yes, and have been since 1954. Prior to that I was the executive vice-president and general manager, beginning in 1944.

The Court: President of what?

A. Cook Chemical Company.

* * *

[82] Q. When did you get into household insecticides? A. We started household insecticides in 1945, which is when DDT came on the market. We were the first ones to put DDT on the market.

Q. How did you market it? A. In pint bottles, quart bottles and gallon cans.

Q. When it reached the cow, how was it applied? A. Not at that time, it was applied by tin sprayers they might have purchased. We had no sprayers at all.

Q. You say "tin sprayers"? A. Tin, chemical sprayers.

Q. How were they made? A. There were several manufacturers. We did not do it.

[83] Q. You did not furnish any sprayers? A. Not in 1945.

Q. At a later date I understand you started to use a plastic type pump sprayer? A. That is true. In 1945, we were the first to manufacture, with a full page two-color ad and raise the price to permit this kind of promotion. In 1947, we put the first sprayer on the bottle, attached it with cardboard to the bottle. This was put on the quart bottle as a sales promotion gimmick. It became so successful that the following year we had to put it on the pint bottles. We tried to merchandise with the quart and the pint with sprayer and without the sprayer but we found the public would not take the bottle that did not have a sprayer attached.

* * *

[84] Q. Mr. Martin, I hand you a plastic type of sprayer that has been marked for identification as Defendant's Exhibit Number 16, and I ask you whether or not you can identify that sprayer for us? A. Yes, this looks like the original sprayer that we used in 1947 as a Calmar sprayer.

Q. You believe that as a matter of fact it is one of the early sprayers. A. Yes, I think so.

Q. I hand you now an empty bottle marked "Real-Kill" and identified as Defendant's Exhibit Number 12 and ask that you tell us what that is. A. Well, this is similar to the first product we put out. Our first name was Cook-Kill. This is a Real-Kill bottle, but this is similar to the way we attached the sprayer.

Q. Now, that exhibit does show, does it not, a sprayer hanging on the side of the bottle? A. That is true.

Q. Is that correct? A. That's true.

Q. Will you state for the record the manner in which it is caused to hang on the side of the bottle? A. Well, it is a paper holder that has a hole that the sprayer can fit into, and the hole can be applied over the cap so that we can fit the neck of the bottle through there.

[85] Q. I notice that that holder is made from cardboard, and I ask you to look at Defendant's Exhibit Number 14 and tell us whether or not that device was ever used for a comparable purpose? A. Yes, we paid for the molds on this plastic holder, and this was also made for us by Calmar. I don't recall the year, but we were trying to get a better device than what we had.

Q. Now, what was the purpose, Mr. Martin, for hanging the sprayer on the side of the bottle in the first place? A. Well, so the housewife would have a convenient sprayer to use rather than go look up the tin sprayer that she might have used before, or use a paint brush, such as they did.

Q. Well, could not the sprayer have been sold separately from the bottle without having any affixation to it at all? A. There would be no reason why it could not have been sold separately.

Q. What advantage, then, did you achieve by using a device for hanging it on the bottle? A. Well, we sell through food brokers, and the grocery stores are very reluctant to buy two different items for the same purpose. In other words, they want a one-package deal, if they can get it.

Q. Now, did that prove to be satisfactory as a package? [86] A. Well, it was far more satisfactory, or it stimulated sales greater than when we did not have sprayers on the bottle. It was a sales stimulant, but, of course, we ran into a number of problems.

Q. Did you look upon this as the ultimate or the final answer? A. No, sir, we did not.

Q. What problems, if any, existed because of that arrangement? A. Well, there was a problem that the dip tube would not extend to the bottom of the bottle because it could not be packaged and shipped that way.

Q. What do you mean by the dip tube? A. The tube that extends into the bottle itself.

Q. Is that the tube by which the liquid is drawn from the container by the pump? A. That is right.

Q. Very well, proceed. A. We also found there was a good deal of pilferage of the sprayer itself because it was hung on there in a very instable manner, as you can see.

Q. Where did that pilferage occur? A. At the grocery store level, mainly.

Q. And what was the reason for such pilferage, if you knew? A. Well, of course, we have had many people write in that they use the sprayer for various things, like sprinkling clothes, [87] and I presume that that was one of the motivating factors.

Q. Did you experience any other difficulty with the idea of providing a package having a sprayer hanging on the side? A. Oh, yes. We had breakage in shipment, which was quite annoying. That dip tube is very fragile. We also had problems in packaging. It, as I recall, took about four girls to put the collar over the neck of the bottle. It took about four girls to put the sprayer into the holder of the—of the plastic—

Q. You mean— A. —of the cardboard ring. It also took an extra girl to put the finished package into a carton because of the sprayer hanging on in that manner.

Q. Did you find at any time that you had any competitors that utilized much the same manner of packaging a sprayer with a bottle? A. Later that was the case. In other words, we were feeling pretty good about the situation. We had taken a common industry and made something of it. I don't think there is any question that we might say that we made insecticides respectable to where it was a pleasure for the retailer to handle them because of the profit, and it was a pleasure for the broker to handle them because of the profit. This hadn't been the case before. They had been sold as cheap fly sprays. And we had very little competition until 1954.

[88] Q. What was the nature of the competition commencing in '54? A. Well, in '54 Johnson Wax got into the market, also Colgate got into the market, and Simoniz actually run two test markets. We were quite pleased

at the time, because educating the public is a very difficult thing, and we were spending a considerable amount of our money and running ads, and there was an educational job needed because of the different types of insecticides, and we welcomed their help as far as advertising the uses of an insecticide were concerned.

Q. I hand you a bottle of Colgate's Kan-Kil marked for identification as Defendant's Exhibit 18, and ask you whether or not that is an example of the early competition that you had in this field? A. No, actually this one is not. This, of Colgate—Colgate came on the market with this product in 1958. They had originally come on the market with an aerosol in 6-ounce cans and 12-ounce cans only, but beginning in '58 they put this product on the market.

Q. Will you compare Defendant's Exhibit 12 and Defendant's Exhibit 18 and tell us the similarities, if any, between the two packages?

* * *

[89] Q. (By Mr. Schmidt) Do you recall my question, Mr. Martin? A. Yes. I thought I answered it. They are attached with a paper collar, but the Colgate product came on the market in 1958.

Q. Well, now, is it not true that they are attached in substantially the same manner? A. That is true.

Q. Do you find any difference, substantial difference, between the collars themselves that are connected to the neck of [90] the containers? A. None.

Q. Do you find any substantial difference in the manner in which the sprayers are held in place by such collars? A. No.

Q. Tell us whether or not there were any other instances of competitors adopting the idea of hanging the sprayer on the side of the bottle in that manner? A. Well, Raid started in 1954 with the quart and pint, hanging the sprayer on the side in a similar manner that we do.

Q. Raid being the trademark covering a household insecticide? A. Yes, of Johnson Wax.

Q. Do you recall any other instances? A. There were some local people that used the sprayer. Prior to 1954

the insecticide industry was made up of a multitude of small packagers scattered all over the United States and almost every major city had at least one, and there were a number of those that used the sprayer on the side.

Q. I hand you a sprayer marked for identification as Defendant's Exhibit Number 20. Will you tell us what that is? A. Well, this is the sprayer that we produced in 1956. That is that Bakan product. I say we.

Q. Now, by Bakan whom do you mean, briefly? [91] A. Bakan was the corporation we formed to produce sprayers and dispensers.

Q. What was the purpose of that? A. Well, the purpose of it, we wanted to find a second source of supply. In 1954 the Calmar Company had sold their interest to the Drackett Company. The Drackett Company were makers of Windex and they had used many millions of bottles of window cleaner, and they were also buying a sprayer from Calmar. We could not be sure whether they would attempt to attach a bottle—a sprayer to the bottle or not. There was only one substantial supplier and that was Calmar. We had tried to find other suppliers of sprayers so that we could have a second source, without success. In other words, we tried to improve the sprayer through Calmar and tried to find other sources that would give us a better package than this.

* * *

[92] Q. Tell us now, briefly, the attempts, if any, made either by Calmar Company or by yourselves, Cook Chemical Company, prior to 1956 to come up with a better type of package than hanging the sprayer on the side of the bottle. A. Well, I presume that we tried to induce Calmar to do something about this situation as early as 1949 because of the problems I have mentioned. Now, it was either '51 or '52 when they brought us what I refer to as a lock-down sprayer that could be shipped directly in the carton and eliminate some of these problems we had.

Q. I hand you Defendant's Exhibit 26 and ask you whether or not that is representative of the so-called lock-down sprayer that you just mentioned? A. Yes, it is.

Q. Tell us about that sprayer. What do you mean by lock-down? What was its purpose? [93] A. Well, you could depress the head into slots and turn it and it would keep the spring depressed, and the purpose, of course, was that it could be shipped in the bottle and it wouldn't be hung on the side It would make a neater looking package.

Q. Now, that particular type of so-called lock-down sprayer was in fact submitted to you as an answer to your problem by Calmar Company? A. That is true. I'm sure that it was made at our request.

Q. When you received that as a supposed answer to your problems, what were your reactions? A. Well, it never got out of the laboratory actually, because we immediately discovered that the sprayer would leak down the stem, and we also discovered very quickly that it would break in shipping, the head would break off.

Q. Do you know of any instance where that type of lock-down sprayer was actually placed in use by anyone in the commercialization of household insecticides? A. Oh, yes.

Q. By whom? A. By Johnson Wax in their product Raid. Nineteen hundred and fifty eight was the year they came out with it.

* * *

[94] Q. (By Mr. Schmidt) Do you recall what designation was given to that type of sprayer by Calmar Company? A. I believe it was the SS 25, if I remember correctly.

Q. Now, back to Defendant's Exhibit Number 24—

* * *

which was originally marked as Defendant's Wise deposition Exhibit 5 on May 25, 1960. Identify that exhibit and explain what it is all about, please. A. Well, this product came on the market in 1958. This was the answer to our sealed-in sprayer that we used late in '57, 1957. Now, actually the first shipments didn't come [95] on the market this way with this cellophane collar or cello-seal cover over the sprayer. They first came on the market, to my recollection, with a cardboard cylinder that fitted over here

to protect the sprayer head. I think this was done after they discovered that they, too, had some breakage in shipment of this article, this insecticide.

Q. Now, first off, what is the product in the can that you are holding, Exhibit 24? A. Well, it is Raid, roach and ant killer, a liquid insecticide.

Q. All right. Secondly, what is the nature of the sprayer in the container? A. The nature of the—

Q. Sprayer. A. Well, the sprayer is similar to the sprayer that we used hanging on the outside of the package, except with a lock-down feature here in the collar.

Q. Is it in any way comparable to Defendant's Exhibit 26? A. Yes, I'm sure it is the same sprayer.

Q. Again, we have the so-called lock-down S 25 Calmar sprayer in the Raid container, is that correct? A. Oh, yes.

Q. Now, you mentioned a hood or cover? A. Yes.

Q. What is it like? What's it for? [96] A. Well, I think they would call it a cello-seal, and they have it in a liquid, and when they push it over here it shrinks down and seals the sprayer and the cap together. Now, there's no question that this was an attempt to contain the liquid that was flowing down the stem, and actually when products are shipped, shippers sometimes invert the cases, and when they do the liquid would run down the stem and discolor the carton. Actually, the cello-seal never worked on the product at all. It wouldn't contain the liquid.

Q. Do you recall when you first saw it on the market? A. It was in 1958.

Q. And do you know when it was discontinued and a substitute shipped? A. Well, I do know this, that Raid took back thousands of cases and reworked them, and I would say that sometime in July or August of '58 they called these shipments in from the market.

Q. I hand you what has been marked Defendant's Exhibit Number 42 and ask you to explain that. A. Well, this is the same product, Raid's product, the same type of product, except it has the Calmar locked-in sprayer that gives the same appearance as ours, the same function actually.

Q. Now, approximately when did that come on the market? [97] A. I do not know whether it came to the market in '58 or '59. Insecticides all have been presold up until recent years. By that I mean they ship several weeks, actually several months ahead of the consuming season and when you get to August you are about wound up as far as business is concerned.

Q. In any event, would you say that Defendant's Exhibit 42 immediately followed Defendant's Exhibit 24 on the market? A. Oh, yes.

Mr. Headley: Mr. Schmidt, that Raid, what company is that that puts that out?

The Witness: Johnson Wax.

[98] Q. I think the full name of the company is on this exhibit? A. Yes, by law it has to be.

Q. Will you read it into the record, please? A. It is S. C. Johnson & Sons, Inc.

Q. And that appears on both Exhibits 24 and 42? A. Yes, the S. C. Johnson & Company, Racine, Wisconsin.

Q. Again before leaving Exhibit 42, the nature of the sprayer, I understand you to say is the Calmar sprayer? A. That is right.

Q. And which one? Is it again the lock-down type? A. Oh, no, it is the new sprayer that came out, I don't know what they called it, SS-40 or something.

Q. Was it the accused sprayer here in suit? A Oh, yes.

Q. I now hand you a sprayer that has been marked for identification as Defendant's Exhibit 30, and ask that you examine it carefully. Do you recognize that sprayer? A. Oh, yes, this is what we called our Model No. 2 sprayer and is the first integrated sealed-in sprayer that was manufactured. It came on the market with this in 1957.

Q. You say, "we came on the market"? A. By that I mean Cook Chemical Company and Bakan.

Q. I hand you a bottle again of Real-Kill, marked for identification as Defendant's Exhibit No. 28, with a sprayer integrated therewith, and ask you to compare that sprayer [99] with that of Defendant's Exhibit 30. A. It is the identical sprayer. The coloring is different but it is the identical sprayer.

Q. Would you say that Exhibit 28 represents the manner which associated the sprayer, Exhibit 30, with a container? A. That is true.

Q. Now, when did that association take place? When does it take place? A. That took place in August of 1957.

Q. I mean when was the sprayer integrated with the container? A. Oh, after the bottle is filled.

* * *

Q. (By Mr. Schmidt) I now hand you a sprayer marked Defendant's Exhibit 46, and a container with a sprayer associated therewith, as Defendant's Exhibit 44. Will you tell us what those sprayers are? A. This was the second production of our Model 2 sprayer.

Q. Is there any similarity between the two sprayers of those two exhibits? A. Oh, yes, they are practically identical in my conception.

[100] Q. Approximately when did this type of sprayer come on the market? A. That sprayer came on the market I believe in December of 1959.

Q. What did you call it? A. Still the Model 2.

Q. Now again, Mr. Martin, I hand you an individual sprayer with a cover cap as before, marked Defendant's Exhibit 50, at the same time a Real-Kill container marked Defendant's Exhibit 48, and having a sprayer end cover cap thereon. Will you explain those sprayers and tell us whether or not they are the same or different? A. Yes, sir, these sprayers are the same.

Q. Whose sprayers are they? A. They are our sprayers.

Q. When did they come on the market? A. They came on the market in 1960.

Q. What did you call them? A. We call them our Model 3.

* * *

[101] Q. Tell us, Mr. Martin, now generally what these various sprayers with cover caps attached thereto are designed to accomplish. A. Well, they are designed to accomplish several things, to eliminate the problems that I spoke of, that is, the dip tube extending down into the

container to the bottom or approximately the bottom. They are designed to eliminate breakage in transit. They are designed to have a better appearance on the shelf. They are designed to allow piling in a store. They are designed to allow pricing on the top of the sprayer. They are designed to effect the seal between the cap and the sprayer, and the sprayer itself so that it can be placed on a container and the seal not affected.

Q. You spoke of several difficulties that you had with hanging the sprayer on the side of the bottle, for example, pilferage. Is this new package capable of alleviating the pilfering problem? A. Yes, we have no problem of that any more.

[102] Q. Do you know why? A. Well, I assume when you take that sprayer out, take the cap off, that you have a bottle that isn't sealed. It is a little more difficult for people to get to that.

Q. You spoke of breakage in shipment with the sprayer hanging on the side of the bottle? A. That has been eliminated.

Q. It has been eliminated so far as the dip tube is concerned? A. That is right.

Q. I think you testified that the dip tube is now in the bottle at the time of shipment? A. Yes, sir, and more or less protected.

Q. What about breakage of the rest? A. It is also protected. The collar is designed to actually give support to that cover cap so that it becomes a protective cap in shipping and protects the sprayer itself.

* * *

[103] Q. Mr. Martin, can you tell us whether or not by virtue of the particular type of the products that your chemical company is packaging, there were special problems created insofar as developing this new package is concerned? A. Oh, yes, there is a problem of containing the liquid itself because it is very fluid, as you probably notice, a petroleum solvent which is a carrier for the insecticide is a wetting agent in itself and will flow where water will not. I want to say this, too, while the sprayer that we hung on the side of the bottle in '47 was a

tremendous success, the sprayer when we put it inside the container was outstanding. We were forced to replace I don't know how many thousands of sprayers, when they put it inside the container. We took back many sprayers that hung on the side.

Q. You mean to say that the container with the sprayer hanging on the side at the retail level was returned to you? A. Oh, yes, we couldn't sell it at all. We still take some back occasionally after all these years.

Q. Why is it? A. Well, the public just refused to buy an insecticide that has a sprayer hanging on the side, just like they refuse to buy an insecticide without a sprayer after 1947 and prior to 1957.

Q. Was that peculiar to Cook Chemical Company or do you know [104] whether it existed by your competitors? A. Anyone selling insecticides have adopted that idea.

Q. Do you know whether or not the sprayer hanging on the side of the bottle has been left on the shelves as far as your competitors are concerned? A. Oh, yes, you can't sell an insecticide that way any more. You just can't do it.

* * *

[105] Cross-Examination by Mr. Conrad.

(Plaintiff's Exhibit A and Plaintiff's Exhibit B marked for identification.)

Q. Mr. Martin, towards the end of your direct testimony you were telling us that it was nowadays difficult to merchandise insecticides in containers unless the sprayer was mounted in the container, as illustrated, for example, by Defendant's Exhibit 44. A. That's true.

Q. Now, I understand that the first full year in which you marketed your insecticides with the sprayer mounted in the bottle, as illustrated by Defendant's Exhibit 44, was the year 1958, is that correct? A. That is true, 1958, that is true. We didn't have that type of bottle with the ears on it in 1958.

Q. But you did have the sprayer mounted in the bottle? A. We did have the sprayer in the bottle.

Q. Now, prior to 1958 you had sold many thousands of bottles of insecticide that had the sprayer mounted on

the side, as illustrated by Defendant's Exhibit 12, did you not? A. That's true.

Q. Now, how did your sales in 1958, the year in which you first mounted the sprayer in the bottle, compare with your insecticide sales, say in the previous year? [106] A. Well, I don't have those figures before me.

Q. Do you have any reason to doubt that your sales, total sales of insecticide, dropped by half a million dollars during the first year that you merchandised your insecticide with the sprayer mounted in the bottle? A. There was a very good reason for that.

Q. That is the fact? A. I do not know without examining the records.

Q. Is it your recollection that there was some drop in sales during the first year you marketed your insecticide with the sprayer mounted in the bottle? A. I'm sorry, that isn't my recollection.

Q. According to your recollection was there any appreciable increase in sales? A. There was none.

Q. Now, Mr. Martin, I have had marked as Plaintiff's Exhibit A and Plaintiff's Exhibit B two packages which I believe were bought locally in a grocery store. I would like you to examine them, please. Have you had an opportunity to look at them? A. Yes.

Q. Can you identify the sprayer units which are inserted in those bottles? A. Yes, they're the Bakan sprayer, Bakan Number 2 on this one—this is Exhibit A—and the same appears to be [107] true on Exhibit B.

Q. I noticed in order to make your examination you removed the caps and then replaced them. A. That is right.

Q. Now, you noticed the conditions the bottles were in when I handed them to you. A. Well, the cap on one was loose.

Q. The cap on one was—you say was loose? A. Yes.

Q. Now— A. Both the container cap on one and the overcap on one was loose.

Q. I see. Now, have you returned them to their normal position? A. I'm not sure that they were returned to the position they were when you handed them to me.

Q. Have you returned them to their normal position? A. I'm not sure.

Q. Would you like to examine them again? A. These sprayers are put on, the cover cap, is put on with a machine that puts on an extra torque on there and this torque is supposed to remain constant. We have nothing to do with putting this fastener on the container itself.

Q. I see. A. So there could be some variances in that.

Q. Well, do they look normal as you have now fixed them? [108] A. They appear normal. I haven't tried to tighten them to what proper torque they should be.

Q. Then you have examined them carefully? A. No. I haven't examined them to see what torque they should possibly be on either the cover cap or on the container.

Q. Are you familiar with the condition of your sprayers when the proper torque has been applied to it, to the cover cap? A. No, that's a technical question. I wouldn't be familiar with that.

Q. I now ask you to examine Plaintiff's Exhibits A and B again and tell me if the condition they are now in is what you regard as representative of the sprayer units made by you and designated Bakan 2 when they are in use on a container? A. Whose container?

Q. On this particular container. A. On this particular container. It appears to me that the cover cap comes down and hits the container cap before it should, on both of these models. I don't know the reason for that.

Q. I see. And you say you regard that as abnormal? A. Yes, I regard that as abnormal.

* * *

[109] Q. Now, I want you to notice, Mr. Martin, that I have now fixed one of these caps so that on—on Plaintiff's Exhibit A—so that it does not touch the bottle cap, does not touch the bottle cap. Now, I understand that you are telling me that that is more or less a normal position of the overcap with respect to the bottle cap? A. That is more or less normal, yes.

Q. I see. Now, I have fixed the other cap, Plaintiff's Exhibit B, so that the bottom of the overcap touches the top of the bottle cap. You see that? A. Yes, sir.

Q. Now, I want you to visualize these two units as they are now fixed sitting on the shelf of a grocery store. Is it your belief that a housewife would select one rather than the other on the basis that on the one the bottom of the cap was not touching and on the other it was touching the bottle cap? A. I would think not. I wouldn't think it would make any difference.

[110] Q. Wouldn't make any difference. Thank you.

Mr. Conrad: Your Honor, I might at this time, just for your assistance, tell you that the purpose of this line of questioning was the following: The claims of the patent in suit specify that the sealing arrangement up inside the cap be such that the bottom of the overcap is maintained out of contact with the cap of the container.

* * *

[111] Q. I see. Now, by the way, Mr. Martin, your testimony was directed almost exclusively to insecticides. Are these pumps made by you and Calmar, the various pumps you have identified, confined in their use to dispensing insecticides? A. Oh, no.

Q. Now, you also examined Defendant's Exhibit 10, which is the Scoggin patent. I will now hand that to you again. Do you find any reference in that patent to insecticides? A. I don't know. If you say there isn't, I will take your word for it. I have never read the patent.

Q. I see. Now, Mr. Martin, turning your mind back to the year 1949, which is, I believe, the time you mentioned when you pleaded with Calmar to come up with some kind of an improved sprayer, do you recall the occasion to which you referred? A. No, I don't recall the specific occasion. I do recall the problems we had when we hung the sprayer on the side.

Q. I see. But nevertheless you did sell many millions of these insecticide units with the sprayer hung on the side? A. Many millions.

Q. Could you give us an estimate of how many millions were sold in that condition, that is as represented by [112] Defendant's Exhibit 12? A. Well, I would estimate that we sold in excess of 50 million.

* * *

[117] Mr. Conrad: Please mark this.

(Plaintiff's Exhibit C marked for identification.)

Q. Mr. Martin, I am now handing you a letter consisting of two pages with four attached pages illustrating sprayers, and ask you if you can tell us what that is? A. Yes, this is a letter put out by Mr. Groebe, Senior Vice-President, undoubtedly to our agents.

Q. What is the date of that letter, please? A. It is dated here November, 1959.

Q. I see. That would be shortly before you first marketed this sprayer which is exemplified by Defendant's Exhibit 46? A. That is true.

Q. Now, will you please read for us, Mr. Martin, the second [118] paragraph on page 1 of that letter? A. "This new cover cap is designed so that it makes a perfect seal on the collar—which the old one would not do."

Q. Thank you. Now, the old one referred to I assume is Defendant's Exhibit 30? A. We must assume that.

Q. Now, Mr. Martin, are you aware that, and I believe you testified to the effect that the accused structure which is called by the plaintiff its SS-40 sprayer was marketed in limited quantities in the late summer of '58, and the commercial production began in January of 1959? Is that in accord with your understanding? A. If the SS-40 is the proper designation of their sealed-in sprayer, over the cover cap, yes, that is my recollection of it.

Q. That is in accord with your understanding? A. Yes.

Q. Now, you recall identifying one of those units I believe as Defendant's Exhibit No. 34? Do you recall that? A. Yes.

Q. Are you familiar with the fact that this unit, Defendant's Exhibit No. 34, which is accused structure, is also provided with what are called inner-seals? A. Yes, I am familiar with that.

[119] Q. Now, the Bakan 2 sprayers made by you prior to the time that the Calmar unit came on the market did not have any inner-seals, did it? A. Well, I think on some products that you might consider it an inner-seal. I know in some products such as starch they had no leak-

age into the cap. If the material was viscous, you might suppose the way that spring pressed against that ball that it created to some extent an inner-seal.

Q. Was there any actual design and construction of parts whose purpose was to effect inner-seals? A. Not to my knowledge.

Q. Now, this is true both with respect to your Bakan and Bakan 2? A. That is right.

Q. With respect to your Bakan 3, that came on the market after the Calmar device with the inner-seals was on the market? A. That is true.

Q. Now, with your Bakan 3 device, it does, however, have an inner-seal? A. Yes, it has an inner-seal and a head seal.

* * *

[121] Q. You understand, of course, that the plaintiff company has manufactured many millions of these? A. I would assume that they would. We have lots of competition, since we started making it.

* * *

[122] Q. Now, I want to get back a moment, Mr. Martin, to the effect you said that it is virtually impossible to retail insecticides without having the spray unit in the container, [123] as more or less illustrated by Defendant's Exhibit 44? A. We find it so.

(Plaintiff's Exhibit D marked for identification.)

Q. Mr. Martin, I want to direct your attention to the container which I have marked as Plaintiff's Exhibit D, which has a pump assembly attached to the side. A. Yes, sir.

Q. Can you identify that for us? A. Yes, that is our product, Real-Kill with a sprayer on the side.

Q. Is that being marketed at the present time? A. It is not being successfully marketed.

Q. But it is still on the market? A. I can still make that same statement.

Q. Let's say you are still trying? A. We are still trying. I didn't say we quit trying.

* * *

Re-Direct Examination by Mr. Schmidt.

Q. You mentioned, Mr. Martin, on cross-examination that these sprayers and cover cap units that are being sold and manufactured by Cook Chemical find use in fields other than insecticide? [124] A. Oh, yes.

Q. Tell us a few examples of those uses. A. They use it in window cleaners, in white sidewall cleaners; they are used in products to clean artificial flowers. I think there are 18 or 20 different categories. They are used in starches as we see here. They are used in waxes.

Q. I will hand you again Plaintiff's Exhibit C, and refer you to paragraph 2 on page 1 that you read into the record, and I will ask you whether you agree with that statement fully? A. You don't have to agree with that statement from the standpoint that it does not make a perfect seal in all cases. I don't think we have reached perfection in anything yet.

Q. Are you saying then that the original Bakan 2 sprayer assembly did not and could not always effect a perfect seal? A. That is true, but it was still a highly satisfactory item as far as we were concerned.

Q. To what extent by virtue of a certain amount of imperfection have you had difficulties and complaints? A. We have had practically none. I suppose we have sold well in excess of 15 or 20 million, that is, used and sold, and I would say that we haven't had 100 complaints that I am aware of.

Q. Did you find that you had established a perfect seal when [125] you came out with Bakan 2 modified? A. No, I would say, no; no, I don't think we have a perfect seal.

Q. You still have instances of leakage past the seal? A. Oh, yes.

Q. Is that leakage any greater or any less than in the Bakan before you changed the seal? A. I am not aware of it if it is. I don't think it is.

Q. When you came out with the Bakan 2 modified and subsequently the Bakan 3, were you then forced to completely discontinue Bakan 2? A. Oh, no, we are still selling many, many Bakan 2's. Some people prefer it.

Q. Did you abandon sales of Bakan 2 modified after coming on the market with Bakan 3? A. Oh, no, we still sell them. I want to correct one statement there. I still refer to our original Model 2 and the modified 2 as 2.

Q. It is still 2? A. Still 2. Now, the original model as you know has been modified and we are no longer selling that for the very reason that we spent $20,000.00 for a machine just to put this cap on and put it on with a certain force and we wanted something that we ought to make and besides that we didn't want to have too many inventories, so that was [126] the reason.

* * *

[129] Q. (By Mr. Schmidt) Where is the sprayer unit manufactured? A. It is manufactured at 935 North Wabash in Kansas City, Missouri.

Q. Where is the cover cap applied to the collar and the fluid? A. At 935 North Wabash, Kansas City, Missouri.

Q. Where do you bottle your insecticides? A. At the Baton Rouge plant.

Q. Does that mean that this sprayer assembly with the cover cap on and with the seal established is shipped from Kansas City to Baton Rouge, is that correct? A. That is true.

Q. And that your bottler in Baton Rouge merely applies the sprayer assembly to the filled container by screwing the container cap in place? A. Oh, yes, we used to have two machines, one to put this one (indicating)—

Q. One to put the cover cap on? A. One to put the cover cap on. We would put it on lightly but they would have to tighten it at Baton Rouge and the other put the container. This eliminates one tightening machine now.

Q. Now, in the home when the housewife has purchased the product, what need she do in order to be able to use it? A. All she has to do is to take the cover cap off.

* * *

[131] Q. And the desirability of the new product is not peculiar to household insecticide, is that correct? A.

Oh, no, no. It has opened up many doors, many doors. Starches, waxes, window cleaners.

* * *

[132] Re-Cross-Examination by Mr. Conrad.

Q. Mr. Martin, I'm a little puzzled about your last statement, that this sprayer with the overcap opened up a lot of new markets, when you indicated a little earlier that the sales of your product, for example, didn't jump when you started to use the overcap. A. I have an explanation for that. Would you like me to give it?

Q. Certainly. A. I said, previously testified, that in 1954 we welcomed the competition of S. C. Johnson and Colgate and even Simoniz, because we felt that we needed help in educating the public in the use of a residual inseciticide and a space insecticide. As you know, advertising is very expensive. At that time I did not realize the tremendous, crushing powers of firms with unlimited resources, and in the spring of 1958, by gimmicks, Colgate loaded the retail trade with millions of dollars of insecticide, and much of that insecticide is still sitting in the shelves, because it was insecticide that had the sprayer hanging on the side of the bottle.

Q. How does this account for the—I don't quite get the relationship between what you just told us and the fact that you said earlier that the advent of the overcap [133] on your sprayer opened up new markets for this type device. A. Well, it did open up new markets. However, a horse can only drink so much water, and if you load a retailer with 25 or 50 cases of insecticide, it makes it very difficult for you to sell any or get very much in there yourself, and this is exactly what Colgate did in '58.

Q. I'm not certain that I get the significance of your answer with respect to the question I asked, but let's go on to something else, Mr. Martin. . . .

* * *

Q. I think you mentioned that with respect to the S 25 LP that was manufactured by Calmar that it never got out of the laboratory. Do you recall making that statement? A. It never got out of our laboratory.

Q. I see. You do know, however, that that is sold in large quantities, even today, do you not? A. I know that it is sold in quantities even today. I know that it is not sold in insecticides today.

* * *

[135] Q. I see. But the matter of how much it cost to make a sealed-in sprayer is a factor in deciding whether or not you are going to use it? A. Certainly.

Q. And it is an important factor? A. It is an important factor, yes.

* * *

[136] Mr. Schmidt: I have one additional problem I would like to take up at this juncture. During the lunch hour we were handed a copy of a subpoena to one of our people whom I understand is out of town, Chester Turner, and we do not as yet know when he will be back, perhaps a little later on in the week, and I am wondering from my adversaries when they would like to have him here. He will probably not be back before Wednesday or Thursday.

Mr. Conrad: We certainly don't want to interfere with the normal work of that man more than is necessary. [137] I don't know how long it will take you to complete your case but the chances are we won't be introducing our evidence until perhaps Wednesday morning and other witnesses will occupy part of the day and I suppose we may take Mr. Turner as late as Thursday.

Mr. Schmidt: In the subpoena there is a request for the production of "all documents of any kind (including memoranda, correspondence and inter-office communications) prepared or dated within the period beginning August 1, 1956 and ending on the date of first commercial production of sprayers known as Bakan Model 3 Sprayers, relating or pertaining to (1) pump-type dispensers or sprayers having (or designed or intended for use with) hold-down caps or protective caps or (2) hold-down or protective caps or (3) parts for use with items (1) or (2) above, in your custody or in the custody of Cook Chemical Company, its divisions or subsidiaries."

We feel that this request has come in rather late and is a substantial duplicate of a request made of Cook Chemical Company by Calmar in November of 1959, immediately preceding the taking of the deposition of Baxter R. Scoggin, Jr., the inventor of the patent in suit. At that time the Cook Chemical Company made every effort to gather together all such material, presented it to counsel prior to his taking the deposition of Mr. Scoggin. It [138] was looked at and examined and every bit of material that was desired at that time was pulled out and placed in the deposition and Mr. Scoggin was interrogated relative thereto. We hardly know what additional material they want. We feel this goes far beyond what they should be requesting and we would like it to be much more specific and indicate wherein we have not produced what they already have in the record.

The Court: All right. I do not know anything about it, gentlemen. I am not going to fool with it now at the time of trial. You will have to fight it out among yourselves.

Mr. Conrad: May we discuss that after this afternoon's session?

Mr. Schmidt: Very well.

* * *

---

[142] Mr. Schmidt: As an adverse witness, your Honor, I call Mr. Robert Wise.

ROBERT WISE,

being produced, sworn and examined as a witness on behalf of the defendant, testified as follows:

Direct Examination by Mr. Schmidt.

Q. State your name and address, please. A. Robert Wise, 6936 Crystal Springs Road, Cincinnati 27, Ohio.

Q. What is your occupation, Mr. Wise? A. I am president of Calmar, Inc.

Q. You hold a position as officer in any other company? A. Yes, I am a vice-president of the Drackett Company of Cincinnati, Ohio.

Q. How long have you been president of Calmar, Inc.? A. Since April of 1955.

Q. Is that about the time that the Drackett Company purchased Calmar? A. It was shortly after the purchase of Calmar by the Drackett Company.

[143] Q. What was the business of the Calmar Company at the time that you became president? A. I didn't become president of the Calmar Company. I became president of Calmar, Inc.

Q. Which was a corporation subsequently formed, is that correct? A. That is right.

Q. And did Calmar, Inc., continue the business of the original Calmar Company? A. No, it did not. Calmar, Inc., was formed as a sales and product development and engineering corporation. It did not do any manufacturing.

Q. What was the business of Calmar Company then at the time it was purchased by Drackett? A. Calmar at the time it was purchased manufactured sprayers and dispensers and sold them.

* * *

[144] A. Calmar Company was producing a line of standard sprayers, one of which was the S-25, which has been mentioned in this dispute. Another was the so-called RS-10 sprayer, which was a fine mist sprayer that had been used by the Drackett Company in connection with a room deodorant. They also had a larger capacity sprayer called the S-15-L, which was a sprayer that had a little circle with a top on the head, enabling the housewife to use that circle to operate the sprayer, and they had experimentally a sprayer called the S-25-LP.

Q. What was the nature of the S-25-LP? A. The S-25-LP was a leak-proof sprayer.

Q. In what sense was it leak-proof? A. It was leak-proof in that it had two collars between which was an "O" ring. The head of the sprayer had two lugs attached to the sprayer and when it was depressed into the collar structure and locked it provided a seal to prevent liquids from coming out of the container.

Q. Is that the so-called bayonet slot-type of a sprayer? A. Correct.

Q. After the formation of Calmar, Inc., did such corporation continue handling the sprayers of the type to which you have just referred? A. Yes.

Q. Now, by whom were those sprayers manufactured? [145] A. They were manufactured by the Calmar Company, a division of the Drackett Company of Los Angeles, and by the Marmac Company of Puerto Rico.

Q. For and in behalf of Calmar, Inc.? A. For and in behalf of Calmar, Inc.

Q. Then the Calmar, Inc., in turn sells such sprayers? A. Correct.

Q. Is that today the manner of operation of Calmar, Inc.? A. Yes.

Q. Calmar, Inc., is not then today a manufacturer of any sprayers, is that correct? A. No, it is not.

Q. After you became president of Calmar, Inc., were you presented with any request or was your company presented with any request for a so-called integral leak-proof shipper spray? A. We had several conversations, I wouldn't say specifically that we were requested. We had many conversations with customers concerning a leak-proof sprayer.

Q. Did those requests come in part from Cook Chemical Company, the defendant in this case? A. I remember having conversation with a Baxter Scoggin concerning leak-proof sprayer and I may have had conversations with others in the Cook Chemical organization, but I do not specifically remember their asking for samples [146] of the leak-proof sprayer that we had available experimentally at that time.

Q. I do believe that prior to the formation of Calmar, Inc., Cook Chemical had received the samples of the S-25-LP available from the former owners. We have searched the record and we have been unable to find where Calmar, Inc., as such, sent samples of the S-25-LP sprayers to Cook Chemical. Believing that such were in fact submitted to Cook Chemical Company, can you tell us for what purpose? A. If they had been submitted to Cook Chemical, I am sure they would have been submitted for use for insecticides, particularly the—specifically the Real-Kill line of insecticides.

Q. Was the purpose of answering their request for a sprayer, is that one? A. Yes.

Q. I hand you Defendant's Exhibit 26, and ask you whether or not that is the S-25-LP sprayer about which you have been testifying? A. It is.

Q. Did you receive any request from any customers of Calmar, Inc., for integrated or shipper sprayer? A. Yes, we did.

Q. Will you name a few of those customers? A. The insecticide fields request from the S. C. Johnson [147] Company. We also supplied them to Colgate-Palmolive, and we supplied to Esso Standard Oil; in the case of window cleaners, we supplied them to the Drackett Company; in the case of hair sprays we supplied them to Dermott, Inc. There are many others that I am not too familiar with.

Q. Do I understand your testimony to be that the S-25-LP sprayer as submitted by you to such customers in response to their request for a shipper's sprayer? A. It was submitted by the people working with Calmar, Inc., our organization.

Q. How did it work out insofar as the insecticide field was concerned? A. We had some very serious difficulties with the S-25-LP in the insecticide field, primarily due to several reasons. I would like to elaborate upon this a little if I may.

Q. Yes. A. This bayonet type of joint to make a unit leak-proof had been made and sold by various Calmar organizations for several years for use with relatively thick products such as hand lotions. At the time that I assumed the presidency of Calmar, Inc., we did have available the S-25-LP experimentally. There seemed to be something of a demand for the S-25-LP for use for thin liquids. In analyzing the product because it had some difficulty with leakage, we determined that the major difficulty or certainly one of [148] the major difficulties for usage with thin liquids had been that the various component parts had not been made to uniform dimensions. In fact, some of them needed to be changed, so bit by bit we began to change the product in an effort to make it more satisfactory. We felt we were pretty largely successful until such

time as we transferred the tooling to Puerto Rico and we encountered serious assembly problems. This joint, pointing here to the collar structure, is composed of two different solvent joints. We underestimated, for example, the fact that the solvents would not evaporate as fast in a humid atmosphere in Puerto Rico and we locked down the sprayers too soon, the pressure of the spring in the locked position tended to cause the collars to lift, thus permitting some degree of leakage by the opening. That was an immediate problem, a long-range problem in the insecticide field and one that in some aspects with a certain type of insecticide was one of chemical compatibility. As a result of these serious difficulties, the product was subsequently returned to Los Angeles for production. We finally corrected all of the tooling and this product today is being sold in substantial quantities to satisfied customers, if not for insecticides.

Q. And it has never been successful in connection with insecticides, is that correct? [149] A. I would say perhaps it has never been successful, perhaps due to the fact that we introduced a new product at considerably lower prices than the prices being charged for this product. This product had a great many parts and required a rather difficult assembly and it always sold at a higher price than the prices which you charged for your product.

Q. You mentioned a new product. What did you mean? A. I am referring to the new SS-40 sprayer which was developed at the time that we began to encounter serious difficulties with this product.

Q. About what period of time? A. The development of the SS-40 sprayer to the best of my knowledge began early in 1958. I can't say that I could pinpoint any specific date because you must remember that our interest in leak-proof devices went back a great many years and to pinpoint when you start a specific research on something is often quite difficult. It seems to me the first drawings I saw of the SS-40 occurred in around March or perhaps April of 1958.

Q. Now, you are not intending to have me understand that the primary reason that the S-25-LP was not satisfactory in insecticides was because of the cost, are you?

A. I would say the cost would definitely be a serious factor.

Q. It was a factor. Is that the primary reason why it was [150] not satisfactory, in connection with it? A. No, the primary reason was the fact that we had serious manufacturing difficulties almost instantly resulted in a leakage which, of course, aggravated our customers.

Q. Leakage was the main problem? A. Leakage was a very serious problem.

Q. I hand you Defendant's Exhibit 24, and ask you whether or not, it does not represent an effort on the part of one of your customers to solve the problem which you could not solve? A. Mr. Schmidt, I gather that this does represent an effort on the part of S. C. Johnson to overcome some of the difficulties that we encountered. Whether or not this was successful I don't know. I didn't know that it had been done when it was done, and I don't know who did it, but obviously it is a type of wrap over the sprayer and over the container cap.

Q. Do you mean to say that during the time that that product was being marketed and commercialized by your company, S. C. Johnson Company, you were not aware of the cover with the cellulose hood? A. Mr. Schmidt, I believe I first saw this when I made one of my occasional trips to Los Angeles and I saw it in our office by virtue of the fact that it had been picked up by one of our men. We had had some conferences [151] with Johnson. We were very unhappy about the products they had on the shelf which incorporated the S-25-LP and which were leaking but I was not aware of the time that they made the decision to put on apparently this type of overwrap. I was later informed, after I had seen it, that they had arranged to have this done.

Q. Then you were aware of that cellulose covering during the time it was being sold? A. I was.

* * *

[152] Q. Mr. Wise, I hand you what has now been marked for identification as Defendant's Exhibits 152, 154, 156, 158, 160, 162, 164 and 166, and ask you whether or not those letters, memoranda, and other material from the files of Calmar represent the difficulties which you

experienced with the S-25-LP sprayer? A. These exhibits are all related to the sad difficulties that we were having in relation to the S-25-LP as outlined in these reports. Most of these are related primarily to our manufacturing difficulties. It was our conviction that the method that we had chosen, or the principle involved in closing off a sprayer so as to prevent leakage from the container was and is basically sound.

Q. Nonetheless— A. Nonetheless we had difficulties, primarily manufacturing difficulties.

[153] Q. I ask you to look at Defendant's Exhibit 166, please. This appears to be a memorandum from John F. Boehm to you, is that correct? A. That is correct.

Q. Dated August 29, 1958? A. Correct.

Q By that date had you not gone a long way in your development of the accused structure? A. By that date we were building the production tooling for the SS-40 sprayer.

Q. Will you, please, read these two short paragraphs of the memorandum into the record? A. "Dear Bob: The S-25-LP continues to plague us with just about every order that we receive. I have investigated the Garry Laboratories complaint and I find that they are entirely justified in charging us back for the unsatisfactory sprayers and resulting damage as outlined in the attached memorandum. Although you may not wish to withdraw the S-25-LP from the market, I believe that we should certainly discourage our sales force from pushing this item. Signed John Boehm."

Q. Is that the culmination of all the difficulties that you had had with that sprayer in the insecticide field? A. I wouldn't say that represents the culmination. It is true we had great difficulty, and at the time that this memorandum [154] was written we were in the process of correcting the S-25-LP deficiencies. Mr. Boehm was handling sales orders, and his comment that we might not wish to withdraw the S-25-LP from the market but that he thought we should discourage our sales force from pushing the item entirely represented his own viewpoint. The S-25-LP was never withdrawn from the market. It was corrected, it is being sold to this day.

Q. For insecticide purposes? A. Not for insecticide to the best of my knowledge, but I honestly don't know.

Q. Now, you made other efforts, did you not, to solve the problem of integrating a sprayer with a container? A. Yes.

Q. I hand you what has been marked Defendant's Exhibit 150, and ask you what that is. A. This exhibit represents a cross sectional sketch, you might say, of what we termed as a boot, the boot being made of polyethylene and looking something like an elongated balloon, with the thought in mind that this would be inserted in a bottle and then a standard type sprayer would be inserted inside the boot, preventing leakage in this manner.

Q. Did that device ever reach the market? A. I don't believe that it did. I know that we made trial tooling, and I believe we submitted samples made from trial [155] tooling to you.

Q. To Cook Chemical Company? A. No, to you during the depositions.

Q. Oh, has it ever been used, as far as you know? A. Not to the best of my knowledge.

Q. And do you know why not? A. Well, primarily because, number one, it was another item that would be expensive. Number two, it would require an additional operation on the part of our customers. They would have to insert this in the bottle, and then they would have to insert the sprayer inside the boot. Number three, it would perhaps cause some confusion with the housewife, who, in order to make the sprayer work, would have to remove the sprayer and then remove the boot and then dispose of it. I would say that the combination of marketing and expense considerations dictated its not being used.

Q. I hand you Defendant's Exhibit 30, and I ask you whether or not you recognize that sprayer? A. Yes, I do.

Q. What is it? A. This is the original Bakan model 2 sprayer, to the best of my knowledge.

Q. When was the first time that you ever saw the original Bakan 2 sprayer assembly? [156] A. I think it was some time in the Fall of 1957.

Q. Who called it to your attention? A. I don't believe I recall who called it to my attention as such.

Q. Did you call it to the attention of anyone else in your company? A. No. Somewhere along the line I think it was called to my attention. I don't recall calling it to the attention of people in our company. I think they called it to my attention first.

Q. Did you at any time discuss the unit with anyone in your company? A. Yes, I did.

Q. And when was that? A. Well, I would say late 1957 and all during 1958, possibly part of '59.

Q. And with whom did you discuss it in 1957? A. Oh, possibly with Hal Harnage, our production manager, Rex Cooprider, who is now in our research department, and Jim Stewart in our sales department, and possibly our salesmen.

Q. Do you recall having discussed it with Mr. Corsette? A. Yes, I did.

Q. And when was that? A. I believe that was some time in 1958.

Q. When did Mr. Corsette first come with your company? [157] A. Corsette was employed by us I think in December, 1957.

Q. Did you hire him? A. I hired him.

Q. For what purpose? A. Well, Mr. Corsette had been employed by a company called Autron (spelling) A-u-t-r-o-n, who had been building for us an automatic assembly machine for assembling our standard sprayers. They had difficulty completing this machine and getting it to work within the contractual period. We took over the machine in an uncompleted state. We employed Mr. Corsette. His first assignment with us was to get this machine completed, work out the production bugs, and send the machine to Puerto Rico. When he first came with us, I know that he spent, I would assume, three full months working on this machine daily.

[158] Q. Mr. Wise, is it not true that Mr. Corsette's first, number one, priority project under your direction and request was to attempt to produce an integrated sprayer comparable in appearance to the Bakan Number 2 unit? A. I don't believe that's true, Mr. Schmidt.

Q. Did you not so testify in your deposition? A. I don't recall that I did testify that way in the deposition. New products are of major importance, but I'm sure that that wasn't his first assignment.

Q. Very well. When do you now say that Mr. Corsette started to work on that project? A. Yes, he started to work. Up until the time that Mr. Corsette had been employed we had never had a research and engineering department as such. All of the product development in the entire history of Calmar prior to Mr. Corsette's employment had been on something of a semi-schedule or hit-and-miss basis. It was done by people who normally had other functions to perform. With Mr. Corsette we started out to establish an engineering and product development department, which I believe was the first department in the history of our industry.

Q. Did the fact that Cook Chemical Company had come on the market with the Bakan 2 unit influence your thinking in so far as setting up that department was concerned? [159] A. I wouldn't say that it was particularly significant. The big problem that those of us who are in the sprayer and dispenser business have is to meet the big competition of aerosols. Our industry has not enjoyed the type of growth that we would like to have seen. For example, I think in a period of about seven years the number of sprayers produced has probably gone from 35 million to maybe 55 million per year, and during that same period aerosols have grown from possibly 200 million to maybe 800 million.

* * *

Q. Let's go back to Mr. Corsette. Did he not undertake the task, at your direction, of developing a satisfactory [160] integrated sprayer unit subsequent to your having first seen the Bakan 2 on the market? A. Will you repeat the question?

Mr. Schmidt: Will you read the question, please?

(Question read.)

A. Mr. Corsette was given the assignment to develop an adequate shipper sprayer, and that assignment, I believe, was made after we first saw the Bakan sprayer.

Q. Then your answer to my question is "Yes," is that correct? A. Because primarily—I don't think he went to work for us until December of '57, and I think we saw the sprayer before that.

Q. But is your answer to my question, yes, he did have an assignment to produce an integrated sprayer unit? A. Yes.

Q. And you assigned that to him? A. I assigned the project to him along with other projects.

Q. What were your instructions with respect to his assignment in connection with the Bakan 2 unit? A. I don't recall that I gave him any specific instructions.

Q. Did you indicate to him your desire that he should come up with a unit that simulated in appearance the Bakan 2 unit? [161] A. No, I did not.

Q. Do you recall whether or not your customers—Colgate, for example, the plaintiff here in suit—requested of Calmar, Incorporated that it furnish an integrated sprayer unit duplicating in appearance the Bakan 2 unit? A. Colgate did not request any such thing. Colgate suggested to us very definitely in discussing shipper sprayers that they preferred the appearance of the Bakan overcap sprayer to that of the S 25 LP. As to the degree of significance, I can't say. Some people prefer redheads to blonds. We have customers today who prefer the appearance of the S 25 LP to the Bakan unit, and buy this product for that reason. Perhaps I shouldn't have elaborated, but I don't think we should put too much emphasis or importance on the problem of appearance.

(Defendant's Exhibit 198 marked for identification.)

Q. Mr. Wise, for purposes of identification, the Wise deposition Exhibit 45 has now been marked Defendant's Exhibit 198. It is entitled, "Development Committee Meeting of December 17." It is dated December 18, 1957, headed "Calmar, Inc." Would you please read the encircled paragraph into the record that appears on page 2 of that document.

[162] A. "R. Wise reported that Colgate rejected our leak-proof boots and expressed preference for Bakan appearance. Would, however, prefer that item be a true

leak-proof sprayer rather than just a shipping closure as produced by Bakan."

* * *

---

[184] CLARENCE T. FISHLEIGH,
being produced, sworn and examined as a witness on behalf of the Defendant, testified as follows:

Direct Examination by Mr. Schmidt.

Q. What is your full name? A. Clarence T. Fishleigh.

Q. And your age? A. 66.

Q. What is your occupation? A. I am a consulting engineer, registered as a professional engineer in a number of States, including Illinois, Ohio, and Michigan and New York.

* * *

[185] Q. What did you do in 1917 after four years in the College of Engineering? A. I was graduated from the College of Engineering, the University of Michigan, with a degree of Bachelor of Science in electrical engineering.

* * *

[186] Q. When did you go into consulting engineer work? A. In 1930 I became associated with my brother, Walter T. Fishleigh, in Detroit, to practice as consulting engineers.

Q. What type of work have you done as a consulting engineer? A. Our work has been generally divided into two different divisions. The first was what might be called a general consulting business along mechanical and automotive lines with particular reference to the development and engineering of new products. In addition to that we did considerable work down through the years in connection with engineering testimony and patent litigation.

Q. Have you done any testing at schools such as universities? A. Yes, I have done a great deal of testing at laboratories of schools such as Illinois Institute of Technology, University of Michigan, New York University, the University of Detroit, Case School of Applied Science,

as well as in the laboratories of many large and small industrial concerns.

[187] Q. Has your experience included expert testimony, engineering testimony in the United States District Courts? A. Yes, it has been my privilege to give so-called expert testimony and engineering testimony in a considerable number of District Courts, from Massachusetts to California, and from Minnesota to Florida, including one previous appearance here before this Court.

Q. You have had experience studying patents, file wrappers, mechanical elements of claims and the like? A. I have had occasion to study many hundreds, if not thousands of patents over the last 30 years and particularly I have had occasion to study the mechanical elements of the claims of such patents to determine what was the scope of those elements considered in the light of the Patent Office procedure, the prior art considered by the Patent Office and the prior art relied upon by defendants in subsequent litigation.

Q. Name a few companies for whom you have done consulting work. A. Oh, I have worked for Ford Motor Company, General Motors, Chrysler, International Harvester, Linde Air Products, Sunbeam Corporation, Vendo here in town, just to name a few.

Q. Are you a member of any professional societies or organizations? A. Yes.

[188] Q. Would you name a few? A. I am a member of the American Society of Mechanical Engineers, the National Society of Professional Engineers, as well as the Ohio and Illinois Societies of Professional Engineers, the Western Society of Engineers in Chicago. For close to 30 years I have been a member of the Society of Automotive Engineers.

Q. Do you have any legal training? A. Yes, sir.

Q. Do you have a law degree? A. Yes, I have a J.D. degree from Detroit College of Law.

Q. You are admitted to practice in Illinois and Michigan, is that correct? A. Yes, sir.

Q. Are you currently engaged in the practice of law? A. No, sir.

Q. What experience, if any, have you had with devices and problems germane to the pump type of sprayers here in suit? A. I have been generally familiar with sprayers and seals for a great many years. Frequently used them, taken them apart and repaired them of one kind and another and at one time had some work in connection with the designing of seals. I have studied the Scoggin Patent in suit and I have also had occasion to operate, take apart and test various of the commercial structures manufactured by the defendant here [189] under this patent in suit, as well as the accused Calmar sprayer.

Q. And you have made comparisons of the two? A. That is correct.

Q. Will you now please refer to the patent in suit, Scoggin Patent No. 2,870,943, Defendant's Exhibit 10, and explain to the Court in detail the structure and the operation of the pump-type liquid sprayer therein described? A. In order to assist in the explanation of that structure I have prepared an enlargement of the drawings in that patent which has been marked for identification as Defendant's Exhibit 54. The Scoggin Patent 2,870,943 is entitled, "Pump-Type Liquid Sprayer Having Hold-Down Cap". It consists in its assembled form or is utilized in connection with a container, No. 12 in Figures 1 and 2 of the drawings and that portion of the drawings which we have colored yellow on this Exhibit 54, Defendant's Exhibit 54. Then there is a screw-type cap, numbered 14 and colored red, which normally is screwed onto the screw threads of the neck of the container, it being a container of metal or glass or, for that matter, plastic.

The cap, 14, has an opening through the center; in other words, it is perforated, and through that perforation extends an extension, 22, of what is called the barrel of the sprayer unit. The sprayer unit is numbered generally [190] as 10, and is not shown in detail as to its internal operation. The specification refers to another patent to Martin, 2,362,080, and says, "that the sprayer 10 is internally constructed in a suitable manner as, for example, in accordance with teachings of the aforementioned patent." But there is a barrel in connection with this pump mechanism which we have colored flesh color and is identified generally by the numeral 24. It has an exten-

sion down below, 28, and then on down to what is generally called a dip tube, 30, which extends to or near to the bottom of the container, and inside of the barrel of the pump unit is a plunger, 26, on top of which is a head, 32. On these drawings the plunger 26 has been colored orange and the head 34 has been colored brown. At the bottom of the plunger is a piston and there are various check valves, ball check valves in the mechanism but not shown such that when the plunger is depressed by pushing down upon the head 34, the liquid is forced up from the container and out through an opening at the point marked 32 on these drawings, and that is normally a nozzle-type opening such that the material comes out in a relatively fine spray.

Then there is a member called a retainer or collar which is identified generally by the numeral 18 as shown in Figure 2 on these drawings and which we have colored [191] green. The retainer fits relatively tightly over the flange 22, flange 22 of the barrel which extends up through the perforation in the cap 14, and the retainer 18 is cemented or otherwise fastened to the barrel 20 to hold the barrel in place on the cap 14.

Q. To the barrel extension 22, in other words? A. Yes. Now, on top of that retainer there is a rib or segment 56 which, as shown in Figure 2, is of triangular cross-section and on the outside, outer circumference of the retainer there are in this preferred showing a pair of screw threads marked 52 and 54 in Figure 1, and I believe generally identified by the numeral 46. In this particular instance there are a pair of separate screw threads.

The last physical element of the structure is a member identified by the numeral 40, a hold-down cap, and that cap has an open cylindrical interior, the space marked 42 in Figure 1 and a somewhat larger cylindrical space at the open end of the hold-down cap, which has an interior screw thread so that when the cap is applied to the retainer it can be tightened into place by means of the cooperating threads at 46 and 52 and 54 and 44.

In addition, at the point where the smaller of the two cylindrical openings in the cap comes to its bottom, there is a shoulder 50 and that shoulder, and it is shown

[192] in the preferred form, has a downwardly faced member or portion which is in this particular form horizontal and then it joins the cylindrical portion with an annular edgelike portion that runs around the interior of the cap and as the cap is applied to the retainer that edge portion comes down and contacts one side, in this instance the outer side of the rib or segment 56, and depending upon how tight the cap is applied, that junction of the vertical cylindrical surface and the flat surface may contact the segment somewhere between its base and its peak, or as shown in the drawings it might be tightened up so that it comes down and in addition to the contact of the edge of the side of the segment there is contact between the horizontal flat portion and the upper base of the retainer 18 outside of the segment, and in that way either by means of the one contact of the edge portion circumferentially around the segment 56, there will be a seal established or, as shown in the drawings, that may distort some so as to have a continuous contact down along the surface of the outer surface of the segment 56 and along the bottom of the shoulder marked 50.

I believe that that covers the general explanation unless you have some further questions

Q. You mentioned the word "distort". Which of the elements do or can distort? [193] A. The patent mentioned in prescribing the preferred form that the member 18, and I am referring to Column 3 of the Scoggin Patent, beginning in line 15: "The material from which retainer 18 is produced is soft enough to be slightly compressed when shoulder 50 and the corner adjacent thereto, rides along the upwardly and inwardly inclined outer face of rib 56 when cap 40 is moved to position." So that as indicated for the preferred form, the retainer is somewhat softer although as shown in the drawings I would say that it tended to indicate that the cap was somewhat softer than the retainer 18.

Q. You mean whichever is softer than the other, you do get a distortion at the seal? A. Well, you are very likely to, yes.

Q. Are there other portions of the specifications of the patent in suit to which you desire to refer to further explain? A. Well, I have marked several number of pages

in my copy that I thought might be pertinent if you care to have me refer to them.

Q. Yes, do so. A. Well, the first is the introductory paragraph in Column 1: "This invention relates to improvements in structures for dispensing liquids wherein is provided a spray-type hand pump mounted within a container for the liquid [194] through use of the closure cap of such container."

And then dropping down to line 36 and running through 61 is a statement of the various objects of the invention. Perhaps I should read the one thing in line 40: "Another important object of the present invention is to provide structure capable of carrying out the functions above set forth which is also adapted to enclose the head of the plunger and thereby protect the same, as well as handlers of the merchandise by virtue of the fact that the said plunger is completely enclosed and held at the innermost end of its reciprocable path of travel."

Q. Judging from the remaining parts of the specifications and drawings, in what way would handlers be protected? A. Well, they would be protected against leakage.

[195] Q. Very well, continue. A. In column two perhaps we should note the portion beginning in line seven. "Both cap or closure 14 and retainer 18 are received by a cylindrical extension 22 of frusto-conical barrel 24, forming a part of the sprayer 10. Extension 22 being integral with flange 20 at the innermost edge of the ladder. Flange 20 is integral with barrel 24 near the larger uppermost edge of the latter and is held against the underside of gasket 38 in the cap 14 when the sprayer 10 is operably associated with container 12."

Q. Now, would you say that particular arrangement, as illustrated in the drawings insofar as the gasket is concerned, must always be followed? That is, is that a part of this invention particularly? A. That detailed arrangement?

Q. Yes. A. No, I believe not. There is an alternate and I believe more commonly used arrangement whereby the flange corresponding with the flange 20 extends out

as between the top of the container and the flat side of the cap 14.

Q. And have you found in inspection of the Defendant's devices that the latter way is more commonly used? A. That is the way, and it is my understanding that it has been used that way quite consistently.

Q. Very well. Continue, please. [196] A. Another reference, beginning in line 67 of column two. "In addition to the seal provided between shoulder 50 and the top surface of retainer 18, there is established an additional annular seal between annular rib 56 and the annular surface of cap 40 immediately adjacent to shoulder 50. This seal is clearly illustrated in Figure 1. The cross-sectional contour of rib 56 is as shown in Fig. 2 to present an upwardly and inwardly inclined annular face which snugly fits against the corner or line of juncture between the shoulder 50 and the adjacent annular inner face of cap 40."

Q. Now, will you refer again to Fig. 2 of the patent in suit, Defendant's Exhibit 54, and point out the, what we might call the horizontal upwardly facing top surface of the retainer 18? A. The particular part that is being referred to is this top surface outside of the segment, although, of course, actually the entire top is such a—

Q. Now, that is exteriorly of the rib or segment? A. Yes.

Q. And it is at the base of such rib? A. At what?

Q. At the base of the rib? A. Yes.

Q. Now, you just read what appeared to be an additional seal. [197] Would you explain now how there might well be two seals there in effect? A. Well, yes. As shown in Figure 1, there is shown a seal between a bottom annular horizontal surface on the inside of the cap and—or that is the portion which is referred to as the bottom surface of the shoulder 50, and this top annular surface of the retainer 18. As shown here, that would form one seal. And in addition to that it refers to a seal as between the corner of that formed between that horizontal surface of the cap and the inner annular cylindrical surface, that corner and this inclined edge or surface of the segment.

Q. Now, that explains, and I believe your testimony was to the effect that if the cap is not brought entirely down to a point where it engages the horizontal flat top surface of the retainer 18, nonetheless you get a seal on the inclined surface of segment 56. A. That is correct, and that might result either from not tightening it quite as tightly or if because of tolerances it might be that the inner diameter of the cap were of such a nature that it wouldn't go down, that is were smaller than the—or sufficiently smaller than the outer diameter of the segment 56 that it wouldn't get down to exact contact in the flat surfaces.

Q. Now, are you familiar with the structure and with the [198] operation of the pump-type sprayers and the hold-down caps that have been manufactured and commercialized by the Defendant? A. Yes, I am.

Q. Will you, please, explain then the structure and operation of such commercial devices? A. In order to help do that I have a number of items. To start with, I have a drawing which is marked as Defendant's Exhibit 72, and I might say that for the moment I am referring to what has been spoken of as the Bakan No. 2, the first commercial structure embodying the principles of the Scoggin invention. In addition to that I—

The Court: May I inquire, has this been referred tc, this SS-40, is this by any chance—

Mr. Schmidt: The SS-40, your Honor, is the accused structure. The Bakan 2 is the Defendant's structure.

The Court: All right.

A. I also have an enlarged plastic model of the Bakan 2, which has been marked for identification as Defendant's Exhibit No. 32, and perhaps I can start with the explanation of that and then go to some additional factors.

Q. If you will, please. A. As to the Bakan 2 as shown on Defendant's Exhibit 72, I think I can pass most of the structure by saying that except [199] for the two or three things which I will call attention to, the structure is substantially identical to that shown in Figures 1 and 2 of the Scoggin patent in suit. There are a couple of small detail differences. For example, whereas in the Scoggin patent the segment or rib 56, as shown as triangular in

cross-section with a relatively sharp point at the top, as shown in the right-hand figure of the two figures on Defendant's Exhibit 72, there is a radius or curve at the top of that segment in the commercial structure, Bakan 2. In addition to—

Mr. Conrad: Excuse me, Mr. Fishleigh. Your Honor, I have no indication at the moment what the purpose of the Defendant is in having Mr. Fishleigh explain the commercial structure of the Defendant. Obviously we cannot be accused of infringing the commercial structure. The question is whether or not the patent is infringed.

Mr. Schmidt: If your Honor please, the purpose of showing the nature of the Defendant's device is to show your Honor that Defendant has in fact manufactured and sold under the patent in suit and followed its invention and that the commercial success that it has had has been because of that fact.

The Court: All right, before the Court. [200] Go ahead. Overruled.

A. In addition to that difference in the contour of the top of the rib 56, there is another difference which has already been alluded to, and that is that the flange on the barrel of the pump corresponding to the flange 20 as shown in Figure 2, on Defendant's Exhibit 54, that being the drawing of the Scoggin patent in suit, in the case of Bakan 2 as shown on Defendant's Exhibit 72, that flange extends out further so that it comes between the cap marked 14 in Scoggin and the container itself, so that there is a clamping action as between the cap 14 and the container that is of this flange. Those are the two particular points there. I have a large model, that is an enlarged model, of the structure showing—showing the grey, dark grey portion as the so-called retainer, and I notice in looking at this that I should point out one detailed difference which I believe is of no importance here, but where there are a pair of threads on the retainer shown in the patent in suit, there is just a single thread on the outside of the retainer here. And I am now pointing, as I hold the unit in its position, I am pointing to the upper surface of the rib or segment corresponding to 56 in the patent drawings, and it is easy to see that that upper ridge is

rounded over. In the hold-down cap there is the upper cylindrical surface, then a flat annular horizontal surface, and a sharp, relatively [201] sharp edge as between the flat annular surface and the cylindrical surface, and when the two are put together as is shown here, and, of course, there is less flexibility in this model because of its large size, less opportunity for distortion, but as this model is organized, that annular edge between the flat horizontal and the cylindrical surface comes in contact with the side of the segment about two-thirds of the way down, and if that were of material such as these structures are commercially made of and small enough, it could be pushed down so that it would come in contact with the flat surface as well. In this particular model it does not. The only seal shown there is between the edge and the side of the segment.

Mr. Conrad: That is just about the right size to fit on a beer keg, your Honor.

The Court: The opening is a little too small for that, however. The orifice is a little too small, I think, for that.

Mr. Schmidt: Do you normally spray beer?

Q. (By Mr. Schmidt) You may proceed. A. In order to more clearly see what does happen in these commercial structures—because, of course, when we pick up any one of them and attempt to look at it the seal portion is inside, we can't tell just what is happening—I have had a series of four such models made in which I have taken [202] or had taken the collar—and the collar is the clear white portion on these models—and fastened that to the top of a metal piece, and then screwed the cap on with certain washers in between so as to hold the cap in various positions of application, and then have cut out a portion of it so as to expose the part, and if I may refer to another drawing I can show that, I believe. I have another drawing which has been marked for identification as Defendant's Exhibit 92 and is colored, still greater enlargement, of a portion of Figure 1 of the Scoggin patent, just running down to the upper part of the container, and I have circled with just an ink circle that portion of the device with which these models is intended to show what happens there. Now, these, of course, are very small, and

I do have a glass which would help us some in looking at the exact structure, but to assist still further I have had—I put these models on a shadowgraph machine and have taken photographs or had photographs taken at approximately 20 to 1 magnification so that we can see what they look like. This series of four Polaroid pictures of these four models have been marked for identification as Defendant's Exhibits 64, 66, 68 and 70. And I perhaps should point out that the four models have been marked for identification as Defendant's Exhibits 56, 58, 60 and 62.

Q. Mr. Fishleigh, just a moment, I think Counsel is a little [203] behind here.

Mr. Conrad: We haven't related the exhibit numbers on the photograph to the cutouts that he is now referring to.

Mr. Schmidt: I will help him, if you can wait just a moment, please.

The Witness: All right.

Mr. Schmidt: The four samples that have been sectioned are 56, 58, 60 and 62. The corresponding photographs, respectively, are 64, 66, 68 and 70.

Mr. Conrad: Thank you.

Q. (By Mr. Schmidt) Very well. I'm sorry. A. Now, referring to Defendant's Exhibit 64, for example—and if we hold them in the manner that I am now holding—the white portion, the whitest part, represents a cross-section of the upper part of the retainer and the rib. In other words, the part going up and curved around the top is the rib, and the part at the left of that rib, which runs horizontally and then curves around, corresponds to the annular portion that we previously pointed out on the retainer just outside of the rib. And then the additional bulge down below to the left is a portion of the thread. Then the less clearly shown, but rather easily observed if we follow it carefully, portion in the left as I am [204] coming down, that represents the cap, and I am now pointing to the cylindrical—interior cylindrical surface of the cap just at a point such as I am now pointing to. And then it runs out horizontally and where the curve is shown is corresponding to the thread in the interior of the cap.

Q. Mr. Fishleigh, would you at this juncture point out to the Court exactly where the lens looked into, where the camera looked into those cut-away samples? A. Yes. The samples were laid down in the manner that I am now laying them, with the number, the 56 for example, up, and the lens looked right as I am now pointing with my pencil, right down into that portion of the cut-away part, as we look at the window, shall I say, the left side of the window, at the part—and you can see correspondingly the part I am now pointing to is the white portion and then here is the cap coming down to the thread and on down. It can be correlated.

Q. Pinpointed at the point of juncture, at the point of sealing, is that correct? A. Yes.

Q. Thank you. A. Now, the first picture, 64, shows the condition prior to engagement of the sealing members or sealing portions of the cap and rim. In other words, there is no contact between the lower surface nor the lower corner of the cap [205] with the diaphragm.

Q. And that is because the washer is holding the cap spaced from the collar in the [model] is that correct? A. That is right. It is being held for purposes of stability in a position which it would be as it was being fastened down before it came in contact. The second one is also slightly before contact. Again, this—incidentally, there will be slight differences in these, in the detail of these pictures, because they are on different samples. In this field, there are very slight differences.

* * *

A. When we get to the third one, which is the photograph which is Defendant's Exhibit 68 and it corresponds to Exhibit 60, we show a contact between the curved corner of the cap and [206] the curved corner of the curved surface of the segment. And then the last one, Exhibit 70, which corresponds to the sample Exhibit 62, shows the condition when the cap is down into full contact in this instance, and it does show a sealing along the edge of the segment, and also a contact across the bottom, the annular flat surface.

[207] Q. In Exhibit 62 there is no washer at all? A. That is correct.

Q. Will you now proceed to the second commercial form, referred to as Bakan 2 modified? A. A drawing of the Bakan 2 modified has been marked for identification as Defendant's Exhibit 90 and in its general organization is quite similar to the Bakan 2 and to the structure shown in the Figures 1 and 2 and 3 of the Scoggin Patent, shown on Defendant's Exhibit 54, with again certain changes. The structure, the configuration of the top portion of the retainer 18 has been changed. The rim or ridge corresponding to 56 has been moved out to the extreme edge, outer edge of the retainer, and then we have a cylindrical outer surface and then a rounded top and come in on an incline on the inner side only and for a limited length on one incline and then a somewhat flatter incline beyond that, and the interior of the cap instead of having the flat surface marked 50 in the drawing Figure 1 of the Scoggin Patent has a projection extending down as shown in this left-hand figure here on Defendant's Exhibit 90, and the arrangement is that as the cap is screwed onto the retainer, the edge of the retainer, that projection or shoulder on the inside comes down inside of the surface inside of the segment or rim or rib, and contact is made between that member [208] and the inner portion of the retainer instead of on the outside of that retainer rib.

Now, I have a model which shows that, showing the construction of that portion; actually this is a model that is marked Defendant's Exhibit 52 and includes some pieces of the so-called Bakan No. 3, but as far as what we are talking about here is concerned, it represents the Bakan 2 modified because the cap construction to that extent and the rib construction are the same in both. In other words, the retainer, the outside wall continues straight up and then bends over and comes in with an incline and then a flatter incline and on the inside it is a little difficult to see, but there is a projection sticking down with sort of a groove and there is a mating between the ring or segment on the retainer and that projection on the inside of the cap.

Now, here again in order to see how the device operates, we have prepared samples which are marked 74, 76, 78 and 80.

Q. Are Defendant's Exhibits 74, 76, 78 and 80 and a series of photographs, Defendant's Exhibit 82, being a photograph of the model Defendant's Exhibit 74—

* * *

[209] Q. Will you continue, Mr. Fishleigh? A. I believe I had just pointed out that the photograph, Defendant's Exhibit 82 corresponds to the model Defendant's Exhibit 74. The photograph, Defendant's Exhibit 84 corresponds to the model Defendant's Exhibit 76. The photograph, Defendant's Exhibit 86 corresponds to the model Defendant's Exhibit 78, and the photograph, Defendant's Exhibit 88 corresponds to the model Defendant's Exhibit 80. Here again the whiter portion on these photographs is a cross-section.

The Court: That is 82, is it not?

A. Yes, I have 82, and the cross-section of the whiter portion, that is the whiter portion of the photograph that is a cross-section of that part of the retainer and the other part which shows tool marks and grain marks, tool marks particularly is a cross-section of that portion of the cap and it is quite clear that as the cap is being brought down, this projection, the shoulder to the right is not yet in contact with the retainer.

The next photograph, Defendant's Exhibit 84, again shows the device brought into closer contact but still no actual contact as between the two parts.

The third photograph, 86, again is hardly in contact although it shows the cap down further than it was in the preceding one, but when we come to Photograph 88, [210] being the showing in the model 80, we can see that there is a definite contact as between that projection on the inside of the cap and the inclined surface of the retainer, that is, that projection has come down and there is contact all the way down the inclined surface and the bottom of the projection touches substantially at the juncture of the two inclined surfaces, either an upper—

Q. (Interrupting) Explain what are the dotted lines that are used on each of those photographs? A. Those are dotted or dashed lines that represent the center lines on the ground glass of this shadowgraph machine in which these

prints were taken so that it gives one an opportunity in adjusting to set up the material at substantially the center of the lenses.

Q. Does that also indicate the position of the model in the photograph with respect to horizontal and vertical as it was being photographed? A. It does, because before the photographs were taken those lines were lined up with the top edge of the base, the metal base on which the models are mounted.

Q. Will you compare Defendant's Exhibit 88 and Defendant's Exhibit 90, and tell us whether you see, you find a general correspondence? A. Yes, in general. Actually in 88 there is a slight space shown above the top of the segment on the retainer, whereas, [211] in the drawing, being considerably smaller, there is no such space shown. The drawing indicates as if it were down just a shade tighter than the photograph 88.

Q. Similarly may we back up to Defendant's Exhibits 70 and 72? A. Well, I would say that 70 and 72 are substantially identical insofar as anything of this sort is concerned.

Q. Now, Mr. Fishleigh, have you studied the mechanical elements of the claims in issue of the Scoggin Patent, Defendant's Exhibit 10? A. Yes, I have.

Q. Will you please explain the mechanical elements of Claims 1 and 2 of the Scoggin Patent and in so doing point out where such elements are present in the structure shown in the drawings of the Scoggin Patent? Do you have any charts or diagrams? A. I have prepared a chart which I thought would be helpful in making such an explanation. That chart has been marked for identification as Defendant's Exhibit 94.

Claims 1 and 2 have been set down in the columns to the right as is evident, at a glance. Claim 2 is a dependent claim, dependent upon Claim 1. The introduction is a section of what I have marked "Introduction" in Claim 1, "In a closure assembly for an open-top container", and finds a response in the "closure assembly for liquid [212] container 12", the container being colored yellow, and the rest of the device is what is generally referred to in this. Having "a perforated cap over said open top there-

of", and that refers to the cap 14 which on these drawings as in the previous drawings of the Scoggin Patent has been colored red.

"C. A spray unit including a barrel provided with a tubular extension passing coaxially upwardly through the perforation in said cap." That finds its response in the sprayer unit marked generally as 10 and includes the barrel 20, colored flesh color and also includes the tubular extension 22 which does pass upwardly through the perforation in the red cap 14.

"D" of the introduction, "A plunger reciprocably carried by the barrel and normally extending therebeyond", and that is, as the note indicates, the "Tubular plunger 26," colored in these drawings orange and it does extend up beyond the barrel in which it is carried, and the last of the introduction: "E. A spray head on the upper end of the plunger above said extension", and that finds its response in the "Spray head 34", colored brown in both Figure 1 and Figure 2 on this chart.

Then, "The combination with said spray unit of an annular retainer telescoped over and secured to the extension above said cap and provided with external, [213] circumferentially disposed screw threads and an annular, continuous segment at the upper part of the retainer above said screw threads." As my note indicates that finds its response in the annular retainer 18 colored green on these drawings and that retainer does have the screw threads at 46 and the annular segment or rib 56 to which we have referred previously and it is telescoped over the tubular extension of the barrel and secured thereto.

The second element, "A cup-shaped hold-down member housing the head and holding the plunger depressed at substantially the innermost path of travel thereof within the barrel, said member", that is as far as it goes. That refers to the hold-down member 40 colored light blue on these various drawings of Figures 1 and 3 on this chart.

And as shown in Figure 1, in its assembled position, that hold-down member 40 on cap 40 does hold the head depressed into substantially its lowermost, or as the claim

says, "innermost path of travel", as it would be depressed in normal spray operation.

Then continuing, "Said member", that is the cup-shaped member, "being provided with internal screw threads complementally engaging said screw threads on the retainer", and those are the internal screw threads 44 shown [214] in prospective in Figure 3 but also shown in cross-section up here in Figure 1 on this chart.

"4. An internal, circumferentially extending, continuous shoulder disposed to engage said segment around the entire periphery thereof and thereby present a liquid-tight seal located between the spray head and said threads on the retainer." Considering it that far, that finds its response in the "downwardly facing shoulder 50", and I should say at this point that I am not there referring merely to this annular horizontal surface but the shoulder itself just as in my own case, my shoulder is not just the upper surface but a substantial part of the body is the shoulder and it is my understanding that in this case that refers not only to the lower surface but that contacting rim and a reasonable part of it so that it is a structure rather than a surface merely.

And in that instance, as I have pointed out, it is the evening between the annular surface and the cylindrical surface which in the first instant contacts the inclined surface of the annular segment or rib 56.

Going on, then, "Said shoulder being spaced from the lower annular peripheral edge of the member a distance at least slightly less than the distance from that portion of said segment normally engaged by said shoulder, to the proximal upper surface of the cap."

[215] Now, what that is saying is that the spacing from the shoulder to the bottom of the cap is less than the spacing from the point of contact of that shoulder with the inclined surface of the segment down to the top of the red cap 14. I should say before that from the shoulder to the bottom of the blue cap of 40 or hold-down member.

And then going on as to the reason for that: "Whereby said lower edge of the member is maintained out of contacting relationship with the cap when the member is on the retainer in a position with said shoulder in tight seal-

ing engagement with the segment." And that is the setting up in structural definition the fact that it is necessary and desirable and is shown in this structure that when the hold-down cap or member 40 is screwed into sealing engagement so that there is a sealing engagement between the shoulder on the cap and the segment on the retainer, that the bottom of the cap does not contact the top, that is, the bottom of the blue cap does not contact the top of the red cap because if it did, it would interfere with the sealing engagement. If you are going to have sealing between two things, you can't have some other projection which prevents it coming down into tight sealing engagement.

Now, that is the end of Claim 1.

Claim 2 includes all of that, as it states. "A [216] closure assembly as set forth in Claim 1, wherein one of the normally interengaged surfaces of the shoulder and segment respectively is substantially conical to present an inclined annular face coaxial with the member and said retainer and of sufficient diameter at the largest end thereof to cause the seal effected between the shoulder and said segment to become tighter as the shoulder slides on said segment during shifting of the member toward the cap."

Now, as applied to the particular form shown in the drawings, the segment or rim 56 on the retainer has an inclined surface so that as the edge between the surface, the horizontal surface, and the inside circumferential surface, as that edge of the shoulder 50 contacts it, it will slide down and become tighter the further it is brought into contact.

But it should be noted, of course, that the claim calls for one of those surfaces, so that it either be that one of the surfaces on the segment, on the retainer of the incline or the surface upon the cap, hold-down cap could be inclined.

Q. Have you made a study to determine whether or not those mechanical elements 1 and 2 find a response in defendant's commercial structures, for example, Exhibits 30 and 46? A. Yes, I have made such a study.

[217] Q. What did you determine? A. Each of the mechanical elements of Claims 1 and 2 of the Scoggin

Patent 2,870,943 find a response in each of the two commercial structures which we have referred to as Bakan 2 and Bakan 2 modified or indicated by I think you said Defendant's Exhibits 30 and 50, was it?

Q. Of 46. A. 46.

Q. Would you explain to the Court the mechanical elements of the patent in suit if they are present in the defendant's commercial structure? A. As to the first form, and looking at the photographs, Defendant's Exhibits 64 and 70, as I pointed out previously, they are substantially identical as far as anything connected with the elements of these claims is concerned, except that there is a slight rounding at the top of the segment but by looking at the photographs and seeing the curved form which does give an inclined annular surface on the retainer, and considering the way that they come in contact and into the position shown on Defendant's Exhibit 70, I would say that the response to these mechanical elements is the same, substantially identical to that which has been set forth here on this chart because of the close similarity between the commercial structure and the structure shown in the drawings of [218] the patent in suit.

Now, as to the second commercial structure in which there is an inclined surface again on the retainer but on the inside instead of the outside, and instead of just having a flat horizontal surface meeting at a corner with cylindrical surface inside the cap, there is a projection extending down from that in the nature of a projection or shoulder or finger, and as that comes down into the position shown on Defendant's Exhibit 88, I would say that down to and including element 3 the response is the same as it was before.

Q. You are now referring to Defendant's Exhibit 94? A. Yes, element as set forth on Defendant's Exhibit 94, the internal circumferential extending continuous shoulder is in my judgment present in the so-called Bakan 2 modified and is in this projection or shoulder that extends down from the inside portion of the hold-down cap and is that portion which makes contact as it is brought further down with the inclined surface on the retainer. I perhaps should have pointed out earlier that there is still, of course, an

annular continuous segment at the upper part of the retainer above said screw threads and this retainer of Bakan 2, just as it was in the patent in suit in the first form, and that is the portion shown in the upper part of the retainer on these [219] two photographs.

And then coming down to element 5, we still have an inclined annular face on the retainer and on the inside here of the rib or segment 56, as it appears in the drawings, only in this case there is the inside instead of the outside in which the contact is made as between the retainer and the hold-down member. So again I say that each of these mechanical elements finds its response in both commercial forms.

Q. Then so far as Claim 2 is concerned, is it of any consequence that the engagement is on the inside of the rib or segment or on the inner inclined surface rather than on the outside? A. No. Now, I should perhaps point out in connection with these models that in the case of Model 62, it can be seen on the model and this is one of the first commercial structures. You can see that the bottom of the housing member is not in contact with the top of the mounting block when it is in its present position which is a tight-down position shown in the photograph, Defendant's Exhibit 70.

Q. You are referring to a sample of Defendant's Exhibit 62? A. Yes, and, likewise, when we look at the Defendant's Exhibit 80, which is shown in Defendant's Exhibit 88 photograph, you can see that there is a slight clearance so that the member [220] is held up, that is, that the distance from the bottom of this shoulder member to the bottom of the cap is slightly less in its assembled position than the distance from the point of contact on the retainer to the top of the metal cap which would be equivalent to the top of the metal block in these models.

[221] Q. Now, is it your conclusion, Mr. Fishleigh, that all of the mechanical elements of both claims one and two find their response in both of the defendant's commercial structures? A. Yes, that is correct.

Q. Are you familiar with the structure and functioning of plaintiff's accused sprayer and cover cap assembly, for example Defendant's Exhibit 34? A. Yes, I am.

Q. Will you please explain to the Court the structure and the functioning of the accused sprayer and cover cap assembly. A. In order to do that I have prepared several different exhibits that would perhaps be helpful. The first is a colored enlargement of Sheet 1 of the drawings of the Cooprider et al patent, 2,956,509, which has been mounted on the easel and has been marked for identification—

Mr. Conrad: Your Honor, I object to the use of that drawing unless there is some foundation laid that there is correspondence between what is in that drawing and what was put out as the commercial structure of the plaintiff. That drawing was, of course, made, like most patent drawings are, some period of time before the actual structure which it covers was put on [222] the market.

Mr. Schmidt: If your Honor please, I think this witness intends to point out the differences and similarities between that drawing and the commercial structure, and if there is any substantial difference he will make that clear.

The Court: Of course, we are concerned here, so far as the infringement is concerned, with the mechanical—with the structure.

Mr. Schmidt: With the device itself, and he will use the devices as well as this drawing for illustration purposes.

The Court: Well, all right. It will be received subject to the objection.

* * *

[227] A. There is in this Cooprider patent disclosed a hold-down cap colored blue and a retainer member marked 70, generally as 70, and colored here in green, and as in the preceding ones that retainer member is fastened to an extension of the barrel part of the plunger that goes up through the perforation in the metal cap. And in that instance there is an upstanding wall, marked 80, on either side of this retainer, and in—well, next to that, as we go from the outside of the retainer inwardly, there is a depression or a groove and then a continuation of the retainer. Now, in the inside of the hold-down cap there are

internal screw threads as previously seen in the others, and I should say that on the outer surface of the retainer there are screw threads 82. Then there is a member coming down, 90, which I believe this patent refers to as a sealing ring 90, and as the members are brought together as the cap is screwed down into its position that sealing ring and the wall 80 come into contact and slide down one another, as I will show in some detail in a moment, but into a position such as shown in Figure 1 of the patent, and at least as shown in Figure 1 of the patent it is shown that the top of the wall 80 is engaged in what is the top as we see it here, but might be considered the bottom of the groove as between that projecting member 90 and the outer wall of the cap, and likewise that the sealing ring 90 projects [228] down to, as shown on the left side, down near to the bottom of the groove in the retainer ring, and as shown on the right-hand side, down to and touching the bottom of the groove. And in that condition, as shown here rather clearly, there is—that is as far as it would go down—there is a clearance space between the bottom of the blue cap and the top of the red cap, number 12, so that there is no interference as between the sealing of those two portions as a result of any contact or interference of the hold-down member of the blue cap and the red cap. Now, in addition to that sealing, and as I say, I will indicate the detail configuration as it appears in samples of this structure later—but in addition to that, and as has been pointed out, there is a probe seal at the bottom, there is a seal as between the head and the retainer, and there is an additional seal as between the head, that portion of the head around the orifice, and the hold-down member, and in order to operate properly these things should be set up so that all of those seals come into operation, or are in operation at the same time. Now, the seal here between the head and the retainer, that is of the member 70—no, the member 48 upon the wall 76 is a sliding, sort of a sliding contact so that can be, under varying conditions, could seal in various positions to some degree but to a lesser degree there is a [229] possibility for some variation and some expansion or contraction of the parts so that there would still be a seal of sorts down at the ball 22 and the probe member under

some variations, but as shown here on this drawing the device cannot be closed down further than as shown here in the drawing and would require considerably more movement in order to have the space, the clearance space, used up as between the hold-down member and the cap for the bottle itself.

Now, I have prepared further enlargement of a portion of Figure 1 of the Cooprider patent, and—

Mr. Conrad: Your Honor, in fairness to the Defendant, I think I should warn them again that there are differences that effect these claims between what is shown in the patent with which Mr. Fishleigh is now working and the structure that was actually marketed.

Mr. Schmidt: Thank you.

The Court: All right. I assume we are going to get to that.

Mr. Schmidt: Yes, very definitely.

The Court: Very well.

A. In this further enlargement I have merely circled that portion of the structure with which I believe we are particularly concerned here, and I have prepared several [230] models of the accused structure, of samples of the accused structure, prepared in a manner quite similar to the models which we have seen previously. Four of them in various stages of closure. They have been marked as Defendant's Exhibits 102, 104, 106, and 108. And I have also had prepared photographs. These were regular photographs taken, and the particular prints which we have are approximately 40 to 1 magnification over the original. Defendant's Exhibit 110 corresponds to the model 102.

The Court: 110 is 102?

The Witness: That is correct, sir.

The Court: All right.

A. 112 is 104; 114 is 106; and 116 is 108. And on looking first at Defendant's Exhibit 110 we can see quite easily and clearly the retainer at the bottom right-hand portion and the portion of the hold-down cap shown at the left and toward the upper left, and at the left-hand end of the retainer is a projection going up with a rounded top corresponding to the wall 80, what is called in the Cooprider

patent the wall 80. And next to that in the retainer is a groove, unnumbered in the patent, but a groove into which the sealing ring 90 fits as it is brought into sealing engagement. And then at the extreme right of the portion which represents the hold-down cap is a projection or shoulder member called a sealing ring in the [231] patent corresponding to the sealing ring 90 as shown in this Cooprider patent, particularly as shown on the exhibit—Defendant's Exhibit 98—where it is easily visible. It will be noted that at the bottom of that sealing ring 90 and at what would be the inside of the cap to the right edge as we see it in this picture is a further little projection which, as we will see later, comes into contact under certain circumstances with the bottom of that groove. Now, the inner surface of the sealing ring 90 as it exists in this picture and as I have observed it in the samples, that is the surface on the left, that is in one sense it could be said to be the outer surface if you were thinking of it in terms of the inner and outer portion of the hold-down member—but thinking of it in terms of the groove that it is next to, at least I am talking about the left-hand surface of that sealing ring as we see it in the photograph, Defendant's Exhibit 110. Now, that surface is in these models inclined. It is inclined as shown here and as we proceed through the pictures you will see that the inclination increases as the contact is made. This first picture shows the two parts just prior, I would say, to contact or just about contact.

[232] Now, as we go on to 112, we see that there is further contact and as we go to 14 there is still further contact, and I have measured and find that under these circumstances, that sealing ring is bent out more so that the inclination of that surface on the sealing ring is even greater than it was to start with, and in any event if we may go for a moment to Defendant's Exhibit 110, it will be noticed that the rounded corners on the top of the wall 80 and on the bottom of the sealing ring 90 where the two come in contact since it is sort of an annular ring, that in effect it is an inclined surface and performs the same general function of permitting initial contact and tighter contact as the two are brought closer together.

And then going down to Defendant's Exhibit 116, we see a picture in which the two members have been brought together substantially as close together as they can be, and you will note that that little projection at the bottom right of the sealing ring 90 has been flattened out somewhat in this view and does form a definite stop at the bottom.

Now, I have looked at several of these different samples. There are variations in minute detail between them as would be expected with any production items, but I have also examined another sample in which the head [233] and plunger were in place and find that the hold-down cap, the blue member 86, as shown on the Cooprider Patent drawings can be brought down quite easily into a position corresponding substantially to that shown in Defendant's Exhibit 116.

Q. Now again, Mr. Fishleigh, in the samples, Defendant's Exhibits 102, 104, 106 and 108, would you use washers to hold the cap spaced from its lowermost end of its application? A. That is correct on the 102, 104, 106; there is no washer on 108.

Q. Do you also have an enlarged representation of the accused structure? A. I do have, and I shall say, of course, that as far as the movement of these parts as they are shown in the various steps from Model 102 to 108, as far as those steps are concerned, this larger model doesn't show the distortion of the parts because it is made on a larger scale for one thing and out of a more rigid type of plastic so that it doesn't conform too easily but you have a window cut in the side of the cap and one can readily see the configuration of the lower part of the cap with the screw threads in the interior wall and then a sealing ring 90 projecting down with a groove between it and the outer wall of the cap or hold-down member, and then on the [234] retainer member, likewise, we can see an outer wall 80 which threads on the outside of it and then a small groove next to that into which the sealing ring projects as it is gradually brought into sealing engagement.

Q. Do you have with you a drawing of the four photomicrographs, Defendant's Exhibits 110, 112, 114 and 116? A. Yes, we have had drawings made to conform to the

outline of the various parts as shown on the four photographs, 110, 112, 114 and 116, and that composite of the four drawings has been colored and marked for identification as Defendant's Exhibit 118.

Q. Now, will you please refer to the Defendant's Exhibit 118, and particularly the letter "C" that you have added to the drawing, and explain the relationship between the interengaging sealing surfaces? A. Well, that surface "C" as I have already indicated is inclined in its original form as I have observed them on these samples, a slight inclination much less, of course, than in the drawings of the Scoggin Patent in suit but, nevertheless, inclined and also having the inclined arcuate portion at the bottom of that surface, and as the two portions, the member 86 and the member 70 are brought together, that inclination increases from what is shown in Stage 1 to that shown in Stage 3 or, for that matter, in Stage 4, and that is an inclined surface there [235] as well as the other arcuate inclined surfaces in other parts of other portions of the members 80 and 90.

Q. And again the dash lines that you have shown superimposed on each of these four stages are the lines of the instrument used in making the photographs? A. The lines on the ground glass of the instrument that is used and correspond to the lines on the respective figures from which these drawings have been traced.

* * *

---

[236] HARRY G. AUSTIN, JR.,

being produced, sworn and examined as a witness on behalf of defendant, testified as follows:

*Direct Examination by Mr. Morton.*

Q. Will you give your name, please? A. Harry G. Austin, Jr.

Q. By what company are you employed, Mr. Austin? A. The James Austin Company.

Q. Where is that company located? A. In Mars, Pennsylvania.

Q. What is the business of that company? A. We manufacture household cleaning products.

Q. Does your company manufacture a window cleaner? A. We do in addition to other household cleaning products.

Q. What is your position with the Austin Company? [237] A. Vice-president and general manager.

Q. Mr. Austin, I have here a bottle marked Defendant's Exhibit 31, which I hand to you, and ask you if you can identify that? A. Yes, this is our window cleaner that is manufactured at Mars.

Mr. Morton: I offer the Defendant's Exhibit 31 in evidence.

The Court: Admitted in evidence.

(Defendant's Exhibit 31 received in evidence.)

Q. Mr. Austin, I now hand you another bottle marked Defendant's Exhibit 33, and ask if you can identify that? A. This is a product that we manufactured prior to the first exhibit.

Q. Is the product shown in those two exhibits a different product? A. They are essentially the same. We did change the formulation here in August of last year in which we added a silicon product to it but basically they are the same product.

Q. About what time did you change the package that that product is packed in? A. The package, you mean this package to this one (indicating)?

Q. Yes, I do. A. October of 1959, I believe is when we made the change.

[238] Q. And when you sold the product in the former package that included no sprayer at all? A. It did not.

Q. What is the source of the sprayer that is shown in the later package? A. This sprayer is purchased from the Bakan Company.

Q. Mr. Austin, what was the price charged for that product while it was sold in the old package? A. In the old package it was 19 cents retail.

Q. What was your price for that package? A. $1.65 a case of 12 20's.

Q. What price is charged for the product in the new package? A. We retail it at 39 cents per case of 12 pints.

Q. And your price for that? A. $3.50.

Q. Was the price change made when the packages were changed? A. It was.

Q. Mr. Austin, would you compare for me the sales by James Austin Company of the window cleaner product that was in the old package and when it was in the new package? A. Well, we introduced this product in 1957 and for the first 28 months we sold about 1700 dozen in the 28-month period. With the introduction of the sprayer we sold over 30,000 dozen the following 28-month period from the time it was introduced until the following 28 months, we sold [239] over 30,000 dozen, so the comparison was 17 as to 30,000.

Q. Mr. Austin, I now hand you what has been marked Defendant's Exhibit 35, a list headed, "Window Cleaner", and ask you if you can identify that? A. Well, this is a sales recap of our sales of the product.

Q. During what period? A. During the period it covers our fiscal year which always ends May 31st, it covers the period 1957 through January of 1962.

Q. Is that prepared from your company's records? A. It was.

Q. Was that prepared by you? A. It was prepared by my secretary for me and is the result of a recap made monthly of the sales of all of our products and given to me and, of course, we maintain a permanent recap of the product by years.

Q. Have you examined this, Mr. Austin, and do you know that it is accurate? A. It is quite accurate.

Mr. Morton: I offer Defendant's Exhibit 35 in evidence.

Mr. Conrad: No objection.

The Court: Admitted without objection.

(Defendant's Exhibit 35 received in evidence.)

Q. (By Mr. Morton) Mr. Austin, when your company changed [240] from the package that is Defendant's Exhibit 33 to the package that is Defendant's Exhibit 31 for the window cleaner, was there an increase in the amount of sales promotion done by your company with respect to that product? A. There was none. We put no effort whatsoever behind the product except the introduction of

the new package; however, since June of this past year we have gone on radio with the item and have experienced a 28 percent increase over the same period of last year.

Q. I understand that the promotion of this product commenced in June of this year but prior to that time there had been no special promotion either in the old or new package? A. None at all.

Mr. Morton: I have no further questions.

Cross-Examination by Mr. Conrad.

Q. Mr. Austin, you were good enough to give me two bottles of your good product and I plan to take them home with me and put them to use. A. Yes.

Q. Mr. Austin, as I look at the product, one of which has been identified as Exhibit 31 and the other as Exhibit 33, the thing that strikes my attention is the radically different appearance of the bottles. What was it that led [241] you to adopt the bottle of the appearance that you now use with your Defendant's Exhibit 31? A. Well, this was the result of a visit by a representative from Cook Chemical who called on us and suggested that we use the spray in conjunction with our window cleaner. He further suggested that we adopt the bottle that had been rather successful with their company, only I think at that time they were using it in amber, this is a clear bottle, and the idea of the lug handles permits one-hand usage of the pump arrangement of the sprayer. You hold it between the fingers and pump with the thumb.

Q. Did you also regard this 31 bottle as a better appearance? A. I think it is a great improvement, labelwise, too.

Q. I mean from a functional standpoint. A. Oh, yes, there is no question about it.

Mr. Conrad: I have no further questions. Thank you, Mr. Austin.

(Witness excused.)

CLARENCE T. FISHLEIGH,

resumed the stand, having been previously duly sworn, and testified further as follows:

Direct Examination by Mr. Schmidt (Continued)

Q. Mr. Fishleigh, I hand you a file wrapper and contents of the [242] Cooprider-Corsette Patent 2,956,509 that has been marked as Defendant's Exhibit No. 122, and ask you whether or not you have heretofore studied the file wrapper and its contents? A. Yes, I have.

* * *

[246] Q. Now, with that background with respect to the nature and construction of the accused structure, I will ask you whether or not you have made a study to determine whether or not the mechanical elements of Claims 1 and 2 of the patent in suit find a response in plaintiff's accused bar and cap assembly? A. I have made such a study.

Q. What did you find? A. It is my considered opinion that each and every one of the mechanical elements of Claims 1 and 2 of the Scoggin Patent in suit find a response in the accused structure, the SS-40 sprayer unit.

Q. Will you please explain to the Court wherein the mechanical elements of Claims 1 and 2 of the Scoggin Patent in issue are found in plaintiff's accused sprayer? [247] A. I have again prepared a chart to clarify and shorten my answer to that question. The chart has been marked for identification as Defendant's Exhibit 120. The left-hand portion of this chart is a photostatic reproduction of the chart which we considered previously, Defendant's Exhibit 94. In the preparation of this present chart we have added a title and column in which there are a number of "Yeses" and which is headed, "Mechanical Elements Found in the Calmar Device". To the right of that block we have added, by way of notes, that the items which in our opinion provide the response for each of the elements and then reproduced the Figures 1 and 2 from the Cooprider Patent and also the drawings which we made of the four stages corresponding to the four models of the accused device.

[248] The introduction—and perhaps I need not repeat the reading of them, because we have been over them before—the first part of the introduction finds a response in this device, which is a closure assembly for a liquid container, the liquid container not being illustrated in these drawings. The "B" portion finds a response in the cap 12, colored red on these drawings and pointed out by way of the lead lines. The "C" portion finds a response in the sprayer, including the barrel 10, colored flesh color, and it does have a portion extending up through the cap, that is the flange 68. The "D" portion finds a response in the tubular plunger 28, colored orange and again pointed out by the lead lines in the 2 view. And the last of the introduction, a spray head, finds its response in the spray head 29, colored brown in these figures, as in the preceding figures of the accused structure.

The first element finds its response in the container 70, that portion of the device colored green, which has screw threads 82 on the outside portion of it. It is telescoped over and secured to the extension above the cap of the—the extension of the barrel above the cap, and it has an annular wall 80, which is in my judgment a response for the recitation of an annular continuous segment at the upper part of the [249] retainer above the screw threads. The second element, a cup-shaped hold-down member, that is the hold-down cap 86, which is colored blue on these drawings, and they have internal screw threads, internal screw threads 84, as shown and pointed out by the lead lines. Then we come to an internal, circumferentially extending, continuous shoulder, and this I will read so that we have it in mind. "Disposed to engage said segment around the entire periphery thereof and thereby present a liquid-tight seal located between the spray head and said threads on the retainer and said member respectively." And I have said that that is the annular sealing ring, and in the various stages of operation as depicted by the four pictures or drawings at the bottom, that member 90, that sealing ring 90, is disposed to engage the wall 80 as shown in these pictures. And then, "Said shoulder being spaced from the lower annular peripheral edge of the member a distance at least slightly less than the distance from that portion of said segment normally engaged by said

shoulder to the proximal upper surface of the cap," in order that the cap not engage, that is, that the hold-down cap 86 not engage the red cap 12.

And my examination of this structure is such that in any position from stage 1, 2, 3 and 4, stage 4 [250] being the maximum that can be obtained before complete contact between these various surfaces, that under any of those conditions the distance from this shoulder to the shoulder of the bottom of the cap is less than the corresponding distance from the portion of the segment engaged to the top of the metal cap so that some clearance is present.

Now, that is all of the elements of claim 1. As to claim 2, the additional element referring to an inclined annular face on one of the inter-engaged surfaces, that is the annular sealing ring 90 has an inclined outer annular face C, that is the face C to which we have previously referred. It in itself is inclined slightly throughout the operation, and not only that, but at its lower end it has a rounded, inclined surface so that in contact with the rounded surface on the top of the wall 80 provides for the type of sealing engagement which is there prescribed.

Mr. Schmidt: I have no further questions.

[251] Cross-Examination by Mr. Conrad.

Q. Mr. Fishleigh, you have covered a good bit of ground in the last few hours. A. Thank you.

Q. And I thought I would indicate to you in a general way the order in which I thought I would take up the various subjects that I want to discuss with you. I have a few general questions first, and then I would like to talk with you about the meaning of these claims that you have been speaking of and then ask you some questions about the nature of the samples that are said to be representative of the accused structure and then discuss with you whether or not the two claims read on the samples. Now, on these general matters, what preparation did you make preparatory to giving the testimony which you have given here today? I do remember you say you had read the Scoggin patent. I wasn't clear on what else you had done. A. Well, I read the Scoggin patent. I have been over the file wrapper, and have been over the prior art.

I have examined a number of samples both on bottles and on pump assemblies such as this Exhibit 40—46—that is in that general condition, both of the accused structures, such as Defendant's Exhibit 34 and of the various Defendant's structures, and then have taken them apart. I have also—

[252] Q. I see. We will get into a good bit of that when we speak about the samples which you used which were said to be representative of the Plaintiff's device. What I was primarily interested in at the moment, Mr. Fishleigh, was whether or not you had studied the prior art which is cited in the file of the patent? A. I have been over that, yes, sir.

Q. Now, have you also studied the patents which the Plaintiff has cited against the Defendant's claim in this lawsuit? A. Yes, sir.

Q. Now, I notice that you found response to the mechanical elements of these claims 1 and 2 in a number of structures which were different in form. A. In some detail, yes, sir.

Q. Yes. A. That is different in some specific details.

Q. So that you regard the claim as a reasonably broad one in that respect? A. I don't think that I would say an extremely broad claim, no, sir.

Q. I see. But you were able to apply it to four different structures which varied in form? A. Varied in some details.

Q. Yes. A. I don't believe that it is one which is restricted, that is [253] that the elements are restricted to the precise things shown in the drawings of the Scoggin patent.

Q. I see. Now, in your discussion of the accused device, I notice you refer to the element 90, I believe it is, as a sealing ring, and I would like to ask you this: Wouldn't you say that a description of the type of seal which you find in the accused structure is pretty well defined in common language by saying that the cap carries a sealing ring which fits into a groove in the collar? A. I have no objection to that language. That is very similar to what appears in the Cooprider patent. I don't think that is for

the details that we are concerned with here, is the final point.

Q. Yes. Well, that would be the normal and common way of describing the sealing arrangement which you find on the accused device there between the collar and the cap. A. That is one way in which the ultimate result can be described.

Q. Yes. And that would be far more the common way to describe the kind of structure which is used to make that seal than, for example, calling one of the elements a shoulder and another one of the elements a segment, would it not? A. Oh, I personally think possibly it would be more common language, but I don't think either one of them, when properly defined, would be wrong.

[254] Q. Now, do you recall any other occasions when you have applied the term "segment" to what you say could be commonly described as a mere groove? A. I don't recall offhand, but—

Q. No, sir, I wouldn't— A. But I don't recall any instance other than this where I applied the term "segment" to just what it is applied to in the Scoggin patent, so that doesn't indicate very much.

Q. That is exactly my point, Mr. Fishleigh. Now, do I understand from the manner in which you read the mechanical elements of the claim that you would not regard as within those mechanical elements a structure which involved an overcap making an internal seal much like is done in the Scoggin and in the accused device wherein the bottom of the cap skirt touched against the top of the bottle cap? A. Well, I think that if it did that consistently, that is, that it would fail to respond to the last element of claim 1. Now, whether or not in some one sample out of a run that might occur, I wouldn't know.

Q. Yes, but putting aside the accidental cases that you mentioned lastly, you would not regard such a structure as coming within the description of the mechanical elements of claims 1 and 2, is that correct? A. Well, I think that it would fail on the last element unless it was in some such way that I just don't think of at the [255] moment that was equivalent.

Q. Yes. Well, just to illustrate the applicability of claims 1 and 2 in that case, I now hold up Defendant's Exhibit 48 and point out to you that I can move this cap down to the point where the bottom of the overcap touches the top of the bottle cap, and I can also back it off to the extent where it does not touch. A. Well, now you have changed the situation, because clearly, if I remember the element—

Q. Excuse me, Mr. Fishleigh, let me finish my question before you set out on an answer. Now, can you visualize one product being made as I first described it and another product being made as I secondly described it? That is, the one in which the overcap is made so that it comes down and touches on the—can be turned down to the point where it touches on the top of the bottle cap. That is the situation in which the internal seals were ineffective to prevent it from touching the bottle cap. Can you visualize that? A. I think I can. That is, that it not only touched but touched sufficiently so that to limit and restrict the amount of movement with the sealing engagement.

Q. Yes. Now, the other situation which I think Mr. Martin described as probably more normal, although I don't find it on Defendant's Exhibit 44, is probably exemplified by [256] the relative position of the bottom of the cap and the bottle top in Defendant's Exhibit 28, is it not? A. Yes, I think—that is not referring to the specific degree of it, of opening, and, of course, as I was about to say before in connection with it, that that spacing takes place when they are in their normal contact. Now, it may be that you can force it beyond that to a place that there is contact between the two caps, and that in my judgment must still come within this element of the claim.

Q. Well, why do you say that? A. Because it—

Q. Doesn't the claim specifically say that the bottom of the cap is maintained out of contact with the top of the bottle cap by the sealing engagement between the rib and the shoulder, and in the instance you have described it would not have done that. A. No, it says that the shoulder being spaced from the lower annular peripheral edge of the member a distance at least slightly less than

the distance from that portion of said segment normally engaged by said shoulder.

Q. Yes. Now read the last clause in the claim, will you, please? A. Yes.

Q. Starting with "whereby." A. Yes. "Whereby said lower edge of the member is maintained [257] out of contact and relationship with the cap when the member is on the retainer in a position with said shoulder in tight sealing engagement with the segment."

Q. Well, do I clearly understand your point that there are some situations in which we can simply ignore that "whereby" clause and that we would have a device which met the mechanical elements of the claim in a situation where the bottom of the overcap skirt did contact the bottle cap? A. No, I didn't say that at all. I said that you might very well have a situation—or at least what I meant if I didn't say it specifically—when in normal contact, in normal position you had such a space but that by applying excessive torque or excessive twist on the cap you were able to push it down beyond normal sealing position and destroy that space between the two.

Q. I see. Now, if you point out to us where in the claim there is any specification of the amount of torque that is to be applied in order to obtain the structure which is described in that claim. A. It doesn't say how much but it says in normal—it says that the position is when it is in—the position from that portion of the segment normally engaged by the shoulder.

Q. Yes. Now let me get this clear. I think this is important, Mr. Fishleigh. Let me get this clear. You have now taken [258] the position that this claim, claim 1, could be infringed by a structure wherein the shoulder and the rib were in tight sealing engagement and the bottom of the overcap was in firm contact with the top of the bottle cap? A. Well, perhaps that is it. I prefer to put it this way: That I believe that you could take a structure which fully meets the elements of the claim or the terms of that last element and then take that and push it on beyond that normal sealing engagement after you had this proper sealing engagement to a position where you would destroy that clearance.

Q. Yes. Very good. Now we come to a very interesting proposition. Since it is your position that this claim might be infringed by a structure in which the bottom of the cap skirt might be in contact with the top of the bottle and also by other structures in which it might not be, how do we go about determining when and—when you do and when you do not infringe the claim? A. Well, you examine the structure in its normal expected condition and note—

Q. What do you mean by normal? What do you mean by "its normal condition"? Is there any normal amount of torque to apply to a bottle cap of the kind we find on Defendant's Exhibit 44? A. I don't know about the Calmar people, but any place that I [259] have known about such things, caps of that kind are applied with a designed torque, plus or minus some tolerance.

Q. Yes, now, give us a figure so we know exactly what kind of torque is involved in order to infringe the claims when we are making a structure as exemplified by Exhibit 48? A. Oh, there is no figure. It might vary from a few ounces in some case to many pounds in another case.

Q. I see. So there is no—there is no way of knowing whether or not you infringe the claim by ascertaining the amount of torque you are applying when you put on this bottle cap? A. No. One might—two structures might respond precisely and their design be sufficiently different that the amount of torque varied widely.

* * *

[260] Q. (By Mr. Conrad) Well, let's see if we can do a little better about getting some kind of an answer to another one of these topics, Mr. Fishleigh. Did you notice in the file history of the Scoggin patent that the applicant said that the novelty of his invention resided in the particular kind of seal he had. A. Well, I don't have that in mind at the moment, but I don't question that it might have been said.

Q. Let me— A. If you will point it out to me I will be glad to agree with you.

Q. We find on page 15, Mr. Fishleigh—I will read it for your convenience—the applicant is referring to claims 1

to 11, which he—excuse me. The applicant has just canceled claims 1 through 15 and had added two new claims, 16 and 17, and he makes this statement, page 15, second paragraph of the remarks: "Said claims clearly point out the novel features of Applicant's hold-down unit whereby the entire assembly is maintained in a predetermined position as shown in Fig. 1 and where the cap and hold-down assembly are rendered leak-proof by the particular manner in which retainer 18 and hold-down member 40 are inter-engaged." And then also on the next page, talking about this seal [261] between the rib and the shoulder, he said: "This seal is particularly provided by the inter-engagement of the shoulder and the rib as pointed out in the claims now remaining in this case and it is believed that such construction is novel to Applicant's device." Doesn't that indicate that the applicant represented to the Patent Office that the novelty of his device was in the particular kind of seal he showed in his patent? A. Well, I wouldn't get that construction. He certainly was saying that in his preferred form as shown it was that particular seal that did it, but I don't think—I wouldn't interpret that to mean that he had in mind that there was no possible modification of it.

Q. Mr. Shipley, of course, in interpreting the claim, reading the mechanical elements of the claim, some meaning must be assigned to these different words that have importance here. Now, one of these, of course, is the word "segment". By the way, Mr. Shipley, are you registered to practice before the Patent Office? A. I am not, and that doesn't happen to be my name, either.

Q. I'm very sorry, Mr. Fishleigh. You say you are not registered to practice before the Patent Office? A. No.

Q. You, of course, have had almost endless experience in dealing with the patents, and perhaps you could tell us [262] how you go about assigning meanings to words which have importance in interpreting the meaning of mechanical elements of the claim? A. Well, primarily I think one works on the basis that a patentee within rather broad limits can be his own lexicographer, and frequently, of course, terms carry a very standard and usual meaning, but if there is any question about it in the

first instance one looks to see what is the structure which is being described, as shown in the drawings of the patent and described in the specification.

Q. Yes. What is the meaning you would attribute to the word "segment" as its ordinary meaning? A. Well, generally—I think here we go more to the general meaning—a portion of a substance or material or structure. Starting out, of course, the so-called—you get a segment of a pie, that sort of thing, or segment of a circle, but also, as in this instance, an annular ringlike portion of the top surface of the retainer, I think that—some part of, as distinguished from the whole.

Q. I see. Now, is the word "segment" used at all in the specification of the patent? A. I don't believe it is. That is my recollection.

Q. Now, do you know whether or not the word "segment" was referred to in the prosecution of the application before the Patent Office? [263] A. Well, I can't tell you that from memory, either. I don't recall it, but I could be quite wrong on that.

Mr. Conrad: Your Honor, I believe you have a certified copy of the file wrapper of the Scoggin patent, which we furnished to you along with the pretrial brief. We plan to mark that in evidence if it is available.

The Court: That may be in my chambers. I expect it is.

[264] Q. Mr. Fishleigh, can you tell us if you have a more or less general recollection from your study of the file history of the Scoggin Patent that the word "segment" is used in Claim 1? It could be substituted by the word "rib" without changing either the meaning or the scope of that thing? A. Well, I would be inclined to think that it could be but I don't have a recollection of any such discussion in the file wrapper. Again, as I say, I don't have this in mind carefully. If you will point to the place one way or the other—

Q. Yes, sir, we are getting a copy of the file wrapper.

The Court: Is that it?

Mr. Conrad: Yes, sir, it is. Thank you very much. Will you please mark this certified copy of the file history of Scoggin's 2,870,943 as Plaintiff's Exhibit E?

(Plaintiff's Exhibit E marked for identification.)

Q. I am handing you a copy of the Scoggin file history which we have marked as Plaintiff's Exhibit E. Will you please turn to page 32 of that file history? You notice in the discussion which appears in the first full paragraph on page 32 that the applicant is referring to the claims which were finally allowed in this application and which now appear in the patent and in the course of that discussion he refers to an annular segment or rib 56? [265] A. Yes, sir, he does.

Q. And then six or seven lines above the bottom of the page he also refers to the "rib or segment 56"? A. Yes.

Q. It appears he is using those terms interchangeably, doesn't it? A. Yes.

Q. And that we could have substituted the word "segment" for "rib" in Claim 1 without changing its meaning or scope? A. I think generally speaking that probably is true.

Q. Now, Mr. Fishleigh, I notice in Claim 1, it states that the container cap or the overcap has— A. May I interrupt just a moment?

Q. Yes. A. O.K.

Q. Claim 1 states that the overcap has a circumferentially extending, continuous shoulder disposed to engage said segment. You see that? A. Where are we now?

Q. In Claim 1 in the description of the shoulder in the overcap. Then it goes on to say that this engagement between the shoulder and the overcap occurs around the entire periphery of the segment, do you see that? A. Yes. [266] Q. What is your understanding of the meaning of the word "periphery" in its common usage? A. I think ordinarily it is the outer edge, the outer circumference.

Q. I see. Now, is there any reason to believe that this word was used in Claim 1 with any meaning other than its ordinary meaning? A. I think that is what they had in mind in describing specifically the preferred structure. That is what they had, I suspect, in mind and that is true in the preferred form.

Q. Well, now, my question was, is there any reason to believe that the word, "periphery" as used in Claims 1 and

2 was meant to carry a different meaning than its ordinary meaning? A. I don't think particularly so, no, although it might not mean that it was restricted to that, that there might not be something else within this context that would be the equivalent. I think they had in mind there the common meaning.

Q. Now, is the word "periphery" which is used in the claim, does it appear anywhere in the specification of the patent? A. Well, I don't recall it. There again it would save time if there is, if you can point it out to me. I don't recall it.

Q. As far as I know, Mr. Shipley, there is no use of that [267] word in the specification with reference to the so-called segment. I am very sorry. I don't know why I have that name in mind so much. I was dealing with a man last week up in New York, and it sort of has an euphonious sound. A. I had that same man the week before down in Memphis and they did the same thing.

Q. They probably did.

The Court: You gentlemen had better be pretty sure.

Mr. Conrad: We have been traveling the same circuit.

Q. (By Mr. Conrad) Mr. Fishleigh, I want you to direct your attention again to page 32 of the file history of the Scoggin Patent. A. 32?

Q. Yes, sir, and since you don't have it I will read a portion of the statement made on 32 about which I just questioned you: "These new patents were carefully studied during the interview and agreement was reached between the Honorable Examiner and applicant's attorney relative to limitations which must be in the claims in order to define novelty over the previously applied disclosure of Lohse when considered in view of the newly cited patents of Mellon and Darley, Jr."

Now, Mr. Fishleigh, I think you will find that the applicant had just cancelled Claim 18 and had substituted [268] for it Claim 25 which eventuated in Claim 1 of the patent and these remarks which I just read to you refer to these changes that were made when you convert Claim 18 into Claim 25. Now, do you recall that that is the case from your study? A. Well, I can recall that with this supplemental amendment which was made following the

previous amendment and without formal office action that the Claim 18 had been cancelled and 25 had been added. I am not as sure as you appear to be that the differences between 18 and 25 were necessarily reflecting what was talked about here, at least not into its entirety.

Q. I see. A. It doesn't say that here at all that that was what was decided.

Q. Well, let's get set up in a matter so we can talk about the thing I have in mind in this respect. We will say that the applicant had submitted Claim 18? A. That is right.

Q. After that he had an interview with the examiner? A. That is right.

Q. Following that he presented Claim 25? A. Yes.

Q. There are some differences between 18 and 25? A. That is correct.

[269] Q. And sometime after the interview he also wrote the following to the Examiner: "These new patents were carefully studied during the interview and agreement was reached between the Honorable Examiner and applicant's attorney relative to limitations which must be in the claims in order to define novelty over the previously applied disclosure of Lohse when considered in view of the newly cited patents of Mellon and Darley, Jr.".

Now, can you see any reason why the applicant would have changed Claim 18 in any respect if the Examiner had found it was in satisfactory condition during this interview? A. I am merely speculating, of course. I don't know what happened, but I have seen other instances where similar changes were made, where allowed claims had been amended to, well, more properly in the eyes of the counsel would describe the invention. I don't know that, but certainly I have seen that sort of thing in many file wrappers.

Q. Yes. Now, in those situations to which you refer, was there also a statement made by the applicant to the effect that the agreement was reached with the Examiner relative to the limitations that must be in the claims in order to define novelty? A. Not in the one I happen to have in mind.

[270] Q. Well, in any event, Mr. Fishleigh, there were some changes made? A. That is right.

Q. And on the whole you can recognize by an examination of Claim 18 and Claim 25 that Claim 25 was the amended version of Claim 18? A. Oh, there are certain portions of it certainly which are identical.

Q. The majority of the language in the two claims is identical, is that not true? A. That is correct.

Q. Now, I want to point this out to you, Claim 18 contained the following limitation— A. (Interrupting) Will you wait a minute until I locate that?

Q. Yes, sir. Mr. Fishleigh, for your convenience I will have marked in evidence a paper on which Claim 18 and Claim 25 are written side by side.

(Plaintiff's Exhibit F marked for identification.)

Q. By handing you that paper it may be a little more convenient for you to use. Now, will you please look at Claim 18 as you have it written there and about ten lines down you will notice it states, "The combination with said spray unit of an annular retainer secured to and surrounding the extension above said cap." Do you see that? [271] A. Yes, I note that.

Q. Now, directing your attention to Claim 25 which later became 21 of the patent, do you see that the corresponding portion of the claim was changed to read, "The combination with said spray unit of an annular retainer telescoped over and secured to the extension above said cap"? A. Yes.

Q. Now, you notice therefore that what happened was that the words "telescoped over" were inserted before the word "secured" in Claim 18, and the words, "and surrounding" in Claim 18 were cancelled out, it would thereby bring about the language as it now appears in Claim 1? A. I see that difference, certainly.

Q. Now, what is your explanation of the significance of that change in language whereby "telescoped over" was added to the claim which was allowed by the Examiner? A. I have no explanation of what was in their minds or what they did or why.

Q. And have you no explanation of the meaning of that change? Didn't you take in account when you were in-

terpreting the claim the fact that the language in this respect had been changed and that the claim was only allowed after the language was changed in this manner? Can you tell us right off if you took that into consideration when you were testifying a moment ago? [272] A. I think I hadn't paid too much attention to that particular sentence.

Q. Now, will you suggest to us the significance of the change which would, of course, take into account what is said about the manner in which this retainer and the barrel extension are assembled in the specification itself and also in the amendments which were filed in the Patent Office? A. Well, it perhaps is a little more specifically accurate as a description of the precise form shown in the drawings.

Q. That explanation doesn't take into account what is said about the relationship between these two parts in the specification nor does it take into account what is said about the relationship between these two parts in the course of the arguments made to the Patent Office. Now, can you give us an explanation which takes those factors into consideration? A. No, I don't see any myself, any substantial necessity for the change.

The Court: Let's take a recess.

(Whereupon, a short recess was taken.)

Q. Mr. Fishleigh, you explained to us just before we recessed that you attach no particular importance to the change in this language from "secured through and surrounding" to "telescoped over" in the description of the manner in [273] which the retainer was mounted on the barrel extension. I am going to suggest to you that is a significant change and is one of the changes the applicant referred to when he said he and the Examiner had agreed upon certain changes that must be made in order to define novelty. I suggest to you, Mr. Fishleigh, that in the specification of the patent with respect to the description of the barrel extension and retainer secured thereon, it is said that one of the purposes of not having the skirt of the overcap touch the cap collar is that so that the retainer will not be stripped off the barrel extension when the cap is screwed down. Do you recall that? A. Yes.

Q. I also remind you that in the course of the argument of the claims before the Patent Office the applicant stated

that the importance of this clearance at the bottom of the cap skirt was to prevent the hold-down member, meaning the retainer, from being forced against the cap whereby the retainer would be pulled upwardly into the hold-down member and the retainer dislodged from its position on the cap, which in turn would result in the barrel being dropped from its position of retention by the retainer 19? Do you say that that appears at pages 15 and 16 of the file wrapper? A. On pages what?

[274] Q. 15 and 16 of the file wrapper, at the bottom of 15 and the top of 16. A. Yes.

Q. Now, isn't it a fact that what the applicant is telling the Patent Examiner there is that the reason for this clearance is to prevent this retainer from being pulled off of the barrel? A. That is what he is saying there. That is one of the reasons.

Q. That is also, is it not, the only reason given in the specification itself for having the clearance at the bottom of the cap skirt? A. Well, I think that may be true.

Q. I refer you to Column 2 of the Scoggin Patent beginning at line 58, and direct your attention to the following where it says: "A downwardly-facing shoulder 50 within the cap 40 engages the upper surface of retainer 18, thereby preventing engagement between cap 40 and closure 14 to prevent forcing of the retainer 18 from its tight press-fit engagement with extension 22." A. That is correct.

Q. Now, is there any other reference in the specification to any other function of that clearance at the bottom of the cap skirt other than what I have just read which relates to the retainer not being stripped off of the bottom? [275] A. I don't believe it is specifically referred to, no, sir.

Q. Mr. Fishleigh, I therefore suggest to you that the change in the description of the manner in which the retainer was secured to the extension from "secured to and surrounding" to "telescoped over" as it appears in Claim 25, was to bring out the fact that the functional limitation which appears as the last clause in the claim was meaningless unless it was included in a description of the device in which the retainer was capable of being stripped off

of the barrel extension by contact between the top skirt and the bottle cap. Do you accept that suggestion as a reasonable one explaining the significance of this change from "telescoped over"? A. I have no question as to whether or not you suggested. That doesn't impress me of being of any particular importance, no, sir.

Q. Well, it is an explanation which does make reference to what is said about the relationship of the retainer in the barrel extension in both the specification and in the amendments that were made to the original application, does it not? A. Yes. Again what?

Q. I say it is an explanation of the change which was made from "secured to and surrounding" as it appeared in Claim 18 over to "telescoped over" as it was pled and allowed in [276] Claim 1 which does take into account what is said about the relationship of those two members, that is the retainer and the barrel extension in both the specification and in the amendments filed in the Patent Office? A. Well, frankly, I don't see that one is particularly different than the other; both of them in the light of the specification and the drawings to me they are substantially the same thing.

Q. Mr. Fishleigh, don't you agree that "telescoped" gives the connotation of being able to pull apart or extend like you extend a telescope? A. Oh, it has been, not that it necessarily can any more, but "surrounding" does, too, so far as that is concerned.

Q. But "telescoped" is more specific and describes the relationship of two elements which may slide in respect to one another? A. It has slid at some time, perhaps.

Q. What would be the point as stated in the specification of having a clearance at the bottom of the cap skirt in order to prevent the retainer and the barrel extension from pulling apart if they could not in fact telescope in that manner? A. Probably none, but I don't read into that other language in Claim 18 that that describes the structure which could not pull apart and whether or not it would telescope.

[277] Q. Now, with respect to what is disclosed in the specification, would there be any meaning whatsoever in the last limitation of Claim 1 calling for the clearance,

if that clearance weren't in connection with a structure where those two elements could pull apart? A. As to just the specific thing which you have referred to as specifically set forth in the specification, no; from the standpoint of the sealing, yes.

Q. Exactly. Now, in your interpretation of the mechanical elements of the claim I gather from what you said earlier that you did not take this suggestion which I have made into consideration? A. Well, I think I could agree with that because I still see no substantial difference between the two.

Q. I see. But you yourself can offer no other explanation which takes into account what is said about the relationship of those two elements in the specification and in the amendments? A. Well, perhaps the telescoping may be a little clearer to use if it were out in the open but in the light of what was here, the other language in that respect, it certainly is quite specific so far as I am concerned.

Q. Let me ask you just one more thing on this whole matter. I pointed out to you that the specification explains that this clearance at the bottom of the cap skirt is for the [278] purpose of avoiding stripping the retainer off of the barrel extension. You agree with that? A. That is stated in the specification; you read it.

Q. There is nothing in the specification which states that the purpose of that clearance at the bottom of the cap skirt is for permitting you to make a more effective seal? A. It is not specifically set forth, no, sir.

Q. Mr. Fishleigh, I direct your attention to Defendant's Exhibit 120, which is mounted on the board to your right, particularly to the four small figures in the lower, right-hand corner of that exhibit. Now, I also direct your attention to the fact that in each of those four small figures, the sealing ring 90 is shown as being disposed at a slight angle with respect to the element which you have marked 80? Do you see that? A. Yes.

Q. Now, in your opinion would you find the mechanical elements of 1 and 2 in which the ring 90 was parallel to the axis of the element 80? A. And with a sharp corner at the bottom.

Q. Let's assume that these figures showed 80 coming down into the groove 88, coaxially of that group rather than at the slight angle, would you consider such a structure as being described by the mechanical elements of Claims 1 and 2? [279] A. As long as it had the circular formation on the bottom, I think it perhaps would. Now you say it would be moved over coaxially so that it never contacted it.

Q. Yes, it would go straight down into the groove 88 rather than approaching it at an angle as it does in these four figures. A. Well, but the critical part as far as I am concerned is that they do come in contact rather than as you have been talking before telescoping without contact.

Q. I see. Well, let's assume that it came in coaxially, that element 80 came in coaxially with the groove even though it may contact the groove on one side or the other, would that structure in your opinion be met by the mechanical or be within the scope of the mechanical elements of Claims 1 and 2? A. I can't see where it could come in coaxially if it did contact it.

Q. Mr. Fishleigh, perhaps I can make it clear if I point it out. You see the 90 here. You see it disposed at a slight angle with respect to the outer wall of the groove 88? A. That is right.

Q. Let's assume rather than being disposed at that angle, that element 90 came straight down into the groove 88. A. Well, as far as that particular point, possibly not. [280] However, if it came down so that there was this contact such as there, if it was in the relationship there, but then went straight up, I think it would still come within the element of the claim.

Q. There is something that I want to ask specifically. The element 90 defines a cylinder with vertical walls and also the groove 88 is provided with vertical walls and that the ring 90 or the cylinder 90 comes straight down into the groove 88. Do you understand? A. Yes. So there is no contact between the two.

Q. Now, there might be contact, Mr. Fishleigh, depending on the width of the ring 90 as compared to the width of the groove 88? A. Well, I think there might be some

question under those circumstances as to that additional element in Claim 2. I believe that probably the first of the elements of the first claim would be met.

Q. I see. The point is that with respect to Claim 1, the mechanical elements would be met even if the ring 90 were perfectly cylindrical? A. Provided they do engage as it calls for.

Q. And that one wall of that cylindrical ring engaged the element 80? A. I think that perhaps is true.

Q. Now, in that structure last described by me there would, [281] of course, be no wedging action between those two elements, would there? A. Well, I suspect not until you got to the bottom of it.

(Plaintiff's Exhibit G marked for identification.)

Q. Mr. Fishleigh, I am setting up before you where you can see it now a model which we have marked as the Plaintiff's Exhibit G, which purports to represent the device shown in the Scoggin Patent in suit and in which there are certain parts that are made movable with respect to one another so that the manner in which the seal is made between the retainer and the overcap can be demonstrated. Will you examine that, please, and tell me if you think that fairly represents what is shown in the drawing of the Scoggin Patent? A. Well, as near as I can tell in a quick glance, it seems to follow somewhat close to it. I don't know about this movable business or what happens.

Q. Now, Mr. Fishleigh, while we are here together, I wonder if you would point out to me on this model the portion of the overcap which you regard as the shoulder which was mentioned in Claims 1 and 2? A. Well, yes, I would say the portion here which would include the horizontal surface, that is, it is bounded by the horizontal surface and extends up some part, a rather indefinite part, but extends up into the wall.

[282] Q. On the basis of what you have pointed to me, I am going to attempt to place a piece of white tape over the portion of the overcap which you have specified. Now, have I placed the tape over the area with respect to which you have testified? A. Oh, very, very roughly.

[283] Q. Well, I will give you an opportunity, if you will please do it for me, after we recess for the evening, to do that more exactly, but that does roughly indicate the area you have indicated? A. Generally speaking, that area or portion of the structure.

Q. Yes. Now, that is what you regard as the shoulder 50, which is referred to in the specification of the patent? A. Well, I think 50, yes, goes to and is pointed out as the bottom surface of that shoulder.

Q. I see. Now, will you point out to me the portion of the retainer which you regard as the segment in the Scoggin structure? A. Well, this little part above the horizontal surface of the main—top of the main body.

Q. I see. I will now attempt to cover the portion of the retainer which you have pointed out as being the segment, with yellow tape. Now, have I done that in conformity with your directions? A. Yes, I would say generally. Certainly it is this portion from the horizontal line up to the top (indicating).

Q. Now, Mr. Fishleigh, I noticed in connection with your designation of the so-called shoulder that you have included an area which is bounded by that inner wall of the upper part of the cap. Is that correct? A. As a part of it, yes.

[284] Q. I notice that the—I notice that that area of the shoulder would not be a downwardly facing surface, would it? A. Well, but that area of the shoulder has a downwardly facing surface.

Q. To the extent that that shoulder includes this inner wall of the cap right in here (indicating), that is not a downwardly facing surface, is it? A. That is correct.

Q. Yes. Now, how do you reconcile your designation of what you have designated as the shoulder when in the specification in the patent it refers to a downwardly facing shoulder 50? A. Well, I still say it is a downwardly facing shoulder, just as my shoulder is an upwardly facing shoulder, but it isn't limited to just this line (indicating). There is more to it, but still it is an upwardly facing shoulder.

Q. Well, following that example along, do you regard any part of your arm, which is hanging down from your

shoulder, as part of your shoulder? A. Well, not necessarily the arm, but certainly my shoulder and shoulder blade goes more than just the upper surface of my coat.

Q. Well, Mr. Fishleigh, referring to column 2, line 58 of the Scoggin patent, were you under the impression when [285] you read the statement that the shoulder 50 was downwardly facing, that it also included a portion of the inwardly facing inner wall of the cap? A. Well, I am under the impression that it is not limited to the surface.

Q. Yes. A. The surface of it is, and he later speaks about the edge between that lower surface and the inner cylindrical wall, but in my understanding of it, the shoulder itself is a structure rather than a surface.

Q. Well, have you taken into consideration in making that answer that beginning at line 77 the specification says, "In addition to the seal provided between shoulder 50 and the top surface of the retainer 18 there is established an additional seal, additional annular seal, between the annular rib 56 and the annular surface of cap 40 immediately adjacent to the shoulder 50." Now, if we take your definition of shoulder, as you have illustrated on this model, then we can't make any sense at all out of that part of the specification which I just read, can we? A. Well, I'm sorry, I can if you can't.

Q. Well, perhaps you can explain this to me, Mr. Fishleigh: It tells here that an additional seal is established between annular rib 56 and the annular surface of the [286] cap 40. A. Yes.

Q. Now, is that something distinct from the seal which is established by the shoulder 50 and the top surface of the retainer 18? A. Well, it is described as distinct, and you might have that at a time that you didn't have the previous one. They are very closely allied. One is the bottom surface itself, and the other is the rim at the edge of the bottom surface.

Q. Let's follow this language through, Mr. Fishleigh. It says, first, "The downwardly facing shoulder 50 within the cap 40 engages the upper surface of the retainer 18." A. That is correct.

Q. And that is this portion (indicating)? A. That bottom surface is engaging the upper surface where you are now pointing.

Q. Which is outwardly of the segment? A. That is correct.

Q. Now, it says, "in addition to the seal provided between shoulder 50 and the top surface of retainer 18." A. That is correct.

Q. Now, that is the seal we just described, isn't it? A. That is right.

Q. "There is provided an additional seal between the annular [287] rib 56 and the annular surface of the cap 40." Now, that would be the seal between this part here and the rib here, would it not (indicating)? A. Well, going on, yes, immediately adjacent at the point where that contacts.

Q. Yes. Well, the specification then speaks of this part in here, which you have designated as part of the shoulder (indicating), as an annular surface of the cap 40 immediately adjacent to the shoulder? A. Yes.

Q. So you are referring to something which is said to be adjacent to the shoulder as part of the shoulder, are you not? A. Oh, I don't think so.

Q. Well, Mr. Fishleigh, from the testimony you gave in the last few minutes here, I don't see how you can make that statement. A. Well, I have no confusion about it other than we can twist the language if we want one way or the other. The first seal he is talking about is the lower surface of that portion as shown on your model and the top portion here (indicating). The next one is between this inner surface and the inclined portion of the segment. Now, that is what he is talking about.

Q. Yes, exactly. [288] A. And there is no misunderstanding on my part as to that, and it is perfectly consistent, in my mind at least, with my position that there is something more than a mere surface when _____ talks about the complete definition of the shoulder.

Q. Yes. Now, Mr. Fishleigh, you will grant me this, will you not: That in this portion of the specification about which we have just been talking, "the annular sur-

face of the cap 40 immediately adjacent to the shoulder 50" is something which you refer to as part of the shoulder 50, is it not? A. It is the surface of the part, the annular surface of the part—the surface of what I refer to as the shoulder, yes.

Q. In other words, the answer to the question is "yes"? If it is, that will terminate this discussion on this point. What is your answer? A. It is the surface of what I—part of the surface of what I refer to as the shoulder, that is correct.

Q. Well, I think this is rather important, Mr. Fishleigh. I would like to have the question read again, and, if possible, I would like to have you give me a "yes" or "no" answer, and any explanation which you wish to make.

(Question at line 6 read.)

A. Well, if you insist on a "yes" or "no", I guess I will have to say "no", because in one case I am referring [289] to a surface, and another case I am referring to a structure.

Q. Now, in the event that you referred to the shoulder 50 as a surface, then I assume the answer would be "yes"? A. No, I think in that case the answer would necessarily still be "no", rather clearly so. If I limit the shoulder to the lower surface 50, then it would be still definitely no.

Q. Mr. Fishleigh, will you direct your attention to claim 2 of the patent, and you will notice that it says in that claim, "A closure assembly as set forth in claim 1 wherein one of the normally inter-engaged surfaces of the shoulder and segment, respectively, is substantially conical to present an inclined annular face," et cetera. Now, what I am interested in is the statement in the second line of the claim where it refers to "normally inter-engaged surfaces of the shoulder and segment, respectively." You will notice that that refers to claim 1? A. Yes.

Q. Now, what are the normally inter-engaged surfaces which are referred to in claim 1? A. Well, for one, I believe that they are referring to the one side, the outer side of what has been referred to as the segment. And on the other side, that portion which [290] interchanges with that—it may at some time be rather a line contact and some other time somewhat more than that.

Q. Mr. Fishleigh, what I was getting at was where in claim 1 at all does it refer to any inter-engaged surfaces? A. I think it does in element 4.

Q. What is the language there? A. "An internal circumferentially extending, continuous shoulder disposed to engage said segment around the entire periphery thereof."

Q. The word "surface" isn't used there, is it? A. Oh, no, not specifically.

Q. Where do you find in the specification any reference to a surface of the shoulder 50 being in contact with anything other than the top of the retainer 18? A. Well, I find that particularly in the drawings, where it is shown there, and in the reference that you read me a little while ago to the—well, the second seal, which it refers to.

Q. Now, with respect to your finding it in the drawings, that depends on interpreting the shoulder as you have on Plaintiff's Exhibit G, does it not? A. As I have where?

Q. As we have it marked on Plaintiff's Exhibit G? A. Well, interpreting it as a part of the structure rather [291] than just the bottom surface of that structure.

Q. Well, finding it in the drawings does depend on that. Now, with respect to the specification, where does it say anything about a surface of the shoulder 50 being in contact with the segment 56? A. Well, specifically it doesn't, but that passage at the bottom of column 2, particularly when taken in conjunction with the paragraph over in column 3 beginning in line 15 about a compression of one member, would indicate that you would end up with a surface contact rather than line contact.

Q. But it doesn't say that. A. No, it doesn't say it —doesn't refer to those words.

Q. Yes. Now, with respect to the statement at the bottom of column 2, it says, "The annular surface of the cap 40 immediately adjacent to shoulder 50" is what contacts the rib 56, does it not? A. That is what it says, yes, sir.

Q. Now, where does it say that the annular surface of the cap 40 immediately adjacent to the shoulder 50 is

part of the shoulder 50? Where does it say that? A. Well, it doesn't say that in so much language.

Q. As a matter of fact, it doesn't up a little earlier indicate that it could not be because the annular surface is a vertically facing surface whereas the rib [292] of the shoulder is described as a downwardly facing shoulder? A. Well, I don't think that that follows at all. That is, it may be a downwardly facing shoulder. For instance, I have a house which faces east, but it is still—and I might describe my house as an eastwardly facing house, but it still has north-and-south walls and west walls as far as that is concerned.

Q. Well, with reference to the description of the direction which your house faces, of course we refer, as everyone would understand, to the front of the house, wouldn't we? A. That's right, but it wouldn't indicate that I had merely a front wall standing up; it would indicate that I had a house of some substance. And, at least as I see it, this shoulder business indicates or connotates something more, perhaps, than just the surface itself.

Q. I see. Well, that really gets down to the point, doesn't it, Mr. Fishleigh, that your interpretation of these claims depends on your interpreting the so-called shoulder as involving more than the downwardly facing surface which exists between the inner wall of the cap and the larger diameter which is coaxially spaced from the smaller diameter to the top? A. I think perhaps that is fair, that, at least, I consider it to encompass more than just the surface alone.

[293] Q. Now, in that case you consider it to encompass more than what is specifically described as the shoulder in claim 3 of the patent? A. I think that they are again talking specifically about the surface.

Q. Yes. In that claim the shoulder is described as a surface? A. In other words, in my judgment they could perhaps better have said—although I don't think it is inconsistent at all—the surface of the shoulder.

Q. I see. But what they actually described was what I have been calling the shoulder, that is the downwardly facing surface right there (indicating)? A. That's right.

Q. And the shoulder as it is described in that claim, at least, certainly does not include any part of this inner wall? A. I think, as I just glance at it quickly here, I think that perhaps is correct.

Q. Yes. And if this is a proper description of the shoulder, it would be at odds with what you have indicated as the shoulder on Plaintiff's Exhibit G? A. I don't think so at all, no, sir.

[294] Q. Well, Mr. Fishleigh, we get right down to what seems to me to be the logical conclusions, and then in my opinion you refuse to draw the conclusion. Now, didn't you tell me just a moment ago that claim 3 described a surface as the shoulder? A. Yes, the surface of the—described what I consider to be the surface of the shoulder. They call it the shoulder, and that is quite commonplace, I think.

Q. What it does describe there, that is that downwardly facing surface, is said in the claim to be "said shoulder," referring to the shoulder mentioned in claim 1? A. Yes, that is correct.

Q. And as described in claim 3, it consists only of a surface? A. I think that is—

Q. That is the downwardly facing surface on which I— A. I think that is correct, as it is specifically set forth in claim 3.

Q. And that is said to be "said shoulder" in claim 3, meaning the shoulder referred to in claim 1, is that correct? A. Well, I think that probably is correct.

Q. Yes, and it doesn't say— A. I haven't checked to see that it says "said shoulder", but if you say it does I assume it does.

Q. I assure you it does. I direct your attention to the fact that it doesn't say that what is defined in claim 3 is [295] "a part" of said shoulder. Now, that being the case, that definition is at odds with what you have defined as the shoulder, which must necessarily include some part of that inner wall of the cap. A. Well, again I am right back where I was. I don't think it is at all. Sometimes one might speak—and in this instance they are clearly talking about—a surface, and in part of the specification they

talk about it as the surface. More accurately I believe they should have said the surface of the shoulder. But clearly that is the downwardly facing surface in that instance.

Q. Well, do you also have in mind, Mr. Fishleigh, that at the top of column 3 of the patent it says—I'm sorry, the sentence to which I want to refer you begins at the bottom of column 2 and it says, "The cross-sectional contour of rib 56 is as shown in Fig. 2 to present an upwardly and inwardly inclined annular face which snugly fits against the 'corner' or line of juncture between shoulder 50 and the adjacent annular inner face of cap 40." A. That is correct.

Q. Now, doesn't that indicate to you that the inner annular face of the cap 40 is not part of the shoulder 50? A. Well, as he is talking about it there, again he is talking about the surface, and there is no question that as between the surface and the inner surface it does form a line of [296] juncture and that is a very convenient way to refer to it.

Q. Yes. Now, this description in the specification at the top of page 3 is also at odds with your designation of the shoulder in Plaintiff's Exhibit G. A. No, I don't see that it is at all in that in the belief that in talking about it that a shoulder can be more than a mere surface.

Q. Mr. Fishleigh, where it says that there is a line of juncture between shoulder 50 and the adjacent annular inner face of cap 40, wouldn't that commonly mean that the annular inner face of cap 40 is something different than the shoulder 50? A. Well, as far as those particular surfaces are concerned, yes.

Q. Well, now, in making your definition of the shoulder in Plaintiff's Exhibit G, you have included the inner face of the cap 40 as part of the shoulder, where here it indicates that it is not part of the shoulder, and as a matter of fact there is a line of juncture between the shoulder 50 and the adjacent annular inner face of the cap 40. A. That is correct.

Q. Well, perhaps we can conclude this if we get this straight: In your designation of what constitutes the shoulder, as you have illustrated with reference to Plain-

tiff's Exhibit G, it includes a part of the annular inner face of the cap 40. [297] A. Well, a part of the inner face of the cap 40 is the inner surface of part of that shoulder, yes.

Q. Very good. And it was on that basis that you were able to read the mechanical elements of claims 1 and 2 on the accused structure? A. Oh, I don't think that I am strictly limited to that at all.

Q. Well, was it on that basis you were able to read the mechanical elements of claims 1 and 2 on the Scoggin disclosure? A. No, I don't think it is on that basis at all. I have pointed out how I read them fairly clearly. It has no comparison, direct comparison at least to what we have just been talking about.

Q. Well, do I understand then, Mr. Fishleigh, that when I asked you a little earlier to cooperate with me in putting a tape on that Plaintiff's Exhibit G so we could see what you understood to be the shoulder, that you put that tape on at a place over an area to indicate the shoulder which was different than the area that you were considering to be the shoulder at the time you were reading these claims on both the accused device and also on the Scoggin device? A. No.

* * *

[299] Q. Mr. Fishleigh, I direct your attention to the models which have been marked Defendant's Exhibits 102, 104, 106 and 108, which I have placed to the left of you, and the photographs marked 110, 112, 114 and 116, which apparently are photographs of the respective models. Will you explain to us how these models were prepared? A. Yes, I will be glad to do that. Samples of the material of the structures were taken. They were cut off first just below the cap and the head taken out, and then the metal cap was cut off and that portion of the barrel up into the collar retainer was milled out with a small hand mill, and then the collars were fastened to these little pieces of blocks, little blocks of tooled steel with Allen headset screws or screws. The caps were then placed on the collars with washers under them to hold [300] them at different positions, that is, so that when the caps were put on to a different extent they would stay in place and

then the windows or cut-out portions were cut out with hand mills again.

Q. I see. Who was it who did that work? A. That was done out in Kansas City here at, I think the Ace Tool & Die, I believe that is the name of it.

Q. When was this done? A. The early part of last week.

Q. You said samples were taken. What do you mean by that? A. Well, Mr. Scoggin furnished me with samples from some that they had purchased as I understood it on the open market. I didn't follow those back. I don't know the origin other than hearsay on that.

Q. Well, did you understand that when these caps were applied and made in the models that the caps were then actually being threaded on the collar for the second time? A. I think that is possible, yes.

Q. Do you know what torque was used to thread on the cap? A. No, sir.

Q. Now, is there any one of those models or photographs supposed to represent the exemplified structure in its condition when the seal between the overcap and the collar is established? A. Well, I think that all but one of them do represent that to [301] some degree or other, the seal becoming progressively more extensive when the cap is screwed down, one type of seal being shown in the photographs, Defendant's Exhibits 112 and 114, and then 116, Defendant's Exhibit 116, the cap is on tight enough to produce another seal at the bottom of the groove.

Q. Well, referring now to the photographs, which one of them shows the seal between the collar and the overcap in what you would call a liquid-tight seal? A. I think that 114 and 116 and perhaps 112.

Mr. Conrad: I will ask the reporter to mark as the Plaintiff's Exhibit H, Patent No. 2,715,480 to Livingstone, and as Plaintiff's Exhibit I, Patent No. 2,763,402, to Livingstone.

(Plaintiff's Exhibits H and I marked for identification.)

Q. Mr. Fishleigh, may we return for a moment to the matter of how the samples were prepared, that is, the Exhibits 102, 104, 106 and 108. Do you know if the caps

were cut at the same time as the collars were cut in making those samples? A. That is my understanding, yes, that they were cut in the condition in which they are now and have not since been removed although some people have handled them now, at least they hadn't been removed after or before the photographs were taken. Now, many people have handled them [302] since. I couldn't vouch for them being in that same condition.

Q. Do you know with what kind of a tool the cut was made? A. It was made with a very small end mill.

[303] Q. Mr. Fishleigh, I would like to ask you some questions with reference to your interpretation of claims 1 and 2 of the patent in suit, and also with reference to Figure 8 of Livingstone Patent '480, which has been marked as Exhibit H. Do you have a copy of that patent? A. Yes, I do.

Q. I have a loose copy here I can let you use. What I would like to do, Mr. Fishleigh, is to ascertain whether or not the interpretation of claims 1 and 2 as you have presented it to us with respect to both the Scoggin patent, the accused structure and some of the Bakan devices, isn't also equally applicable to the prior art represented by Figure 8 of this '480 Livingstone patent. Now, do you recall yesterday that Mr. Schmidt and I more or less agreed that the pump proper here wasn't really essential to our consideration of the matter of the seals made here which we have been discussing with reference to claims 1 and 2? A. I heard some discussion about that.

Q. Mr. Fishleigh, let me—in order to make our consideration of these other patents a little clearer, just take this out of the model G.

Mr. Conrad: And, your Honor, after I do remove this central pump section from model G, I would like to have this model then photographed and marked in evidence as Plaintiff's G-1.

[304] The Court: Very well.

Q. (By Mr. Conrad) I also have here, Mr. Fishleigh, an enlargement of Figure 8 of the '480 Livingstone patent to which we might make reference in order to make our comparisons a little easier. Now, let me ask you as a pre-

liminary if you have studied the Livingstone '480 patent in connection with your preparation for the trial? A. Yes, I have studied it.

Q. You recognize, then, that the spout which is shown in red and to which I am now pointing is a spout which is held down, that is depressed, when the overcap 37 is applied to that structure. A. Yes, it is a pouring spout.

Q. But this cap 37 does function to hold that down when the cap is on? A. To depress it slightly, as is shown there in that figure.

Q. I am now pointing to the area of the cap 37 at the point where the lower end of the internal diameter is expanded to a larger diameter. Do you see that? A. Yes.

Q. Now, is this area in here between those longitudinally spaced sections of different diameter (indicating), what you would call a shoulder? A. I think so, yes.

Q. That would correspond to the shoulder which we have [305] designated over here on the model of the Scoggin patent? A. Well, it has some similarities. At least, I would call it a shoulder.

Q. Yes. Now, I am now pointing to the top part of the member which is colored light green and designated, I believe, by the numeral Do you see that? A. Yes.

Q. Now, you notice there is a slight section of that that extends above the uppermost screw thread on that collar? A. Yes.

Q. Now, could you designate that as a rib or segment on that collar? A. Well, on that member, yes, but not on—on that particular member it could be considered to be a—

Q. A rib or segment? A. Top wall.

Q. Yes. Now, do you observe that a seal is established between this collar, which is light green, and the shoulder of the overcap when they are brought into engagement with one another? A. Yes, sir.

Q. By threading the overcap down on the collar? A. Yes, sir.

Q. Do you also observe that there is space beneath the bottom of the overcap and the top of the container cap, the [306] latter being colored black? A. Yes.

Q. Now, isn't that space sufficient to enable one to turn the cap down and establish a tight seal between what we have designated as the shoulder of the overcap and the upper portion of the collar? A. That is correct, but it is not the situation that you called my attention to yesterday of prevention of pulling that what you call collar, that light green member, up and away.

Q. Yes. Well, insofar as the matter of pulling the retainer off of the barrel extension, that would only be a problem in a device such as illustrated in the Scoggin patent where the retainer was not cemented to the barrel extension, is that correct? A. Well, where there was a possibility of pulling it off, either where it had been cemented but not sufficiently to resist the pressure or—

Q. Do you know whether that is a problem of any practical importance whatsoever in the manufacture of any of these spray devices? A. I don't think it is, because I think in all cases the clearance is there so that the matter is avoided in the first instance.

Q. Yes. Now, just with respect to the matter of providing [307] a space between the bottom of the overcap and the top of the bottle cap in order to permit turning the overcap down to the point where a liquid-tight seal is established, we do have such structure in this Livingstone patent Figure 8 which we have been just discussing? A. Yes, sir.

* * *

---

[310] BAXTER I. SCOGGIN,

being produced, sworn and examined as a witness on behalf of the defendant, testified as follows:

Direct Examination by Mr. Schmidt.

Q. State your full name and address, please. A. Baxter I. Scoggin, 1223 West 66th Terrace, Kansas City, Missouri.

Q. Tell us of your educational background after graduation from high school. A. I took a degree in Engineering from Oklahoma University and I had some additional business training.

Q. By whom are you employed? A. Cook Chemical Company.

Q. In what capacity? A. I am a vice-president in charge of production.

Q. How long have you been with Cook Chemical Company? A. About nine and a half years.

Q. Immediately prior to coming with Cook, what did you do? A. I was with an oil company.

Q. What were your duties? A. I was in charge of the research and development department.

Q. And prior to that? A. Prior to that I was in school.

Q. What do your duties with Cook include? [311] A. Well, they include the management of all the producing units of the company and I have had various and sundry duties since I came with them.

Q. What do your producing duties include? A. That includes both the packaging of the insecticides, the manufacture of sprayers.

Q. Those duties commenced when you first started to work for Cook? A. When I first started to work for Cook I was in charge of installing a refinery for the production of deodorized solvent and the base of an insecticide.

Q. Did your duties subsequently expand into the matter of manufacturing and production of sprayers? A. Well, they did in about 1954 on.

Q. At the time you commenced working for Cook Chemical Company, was the company manufacturing any type of sprayer devices? A. They were not.

Q. What did you do insofar as getting the Cook Chemical Company into the sprayer business? A. Well, I contacted two makers, molders, and made a design, and experimental mold and final mold, designed assembly equipment, etc., for the production of sprayers.

Q. Did you have anything to do with putting the plant into production? A. Absolutely. That was one of the major portions of getting [312] a sprayer into production was having assembly equipment.

Q. Were those duties primarily and solely yours? A. Primarily.

Q. Ultimately when did you get the first plant into production to manufacture sprayers? A. It was in production I believe about January of 1956.

Q. That first sprayer that was manufactured by Cook, did it have any type of hold-down cap or member? A. It did not.

Q. Did it have any means to provide a so-called leak-proof assembly with the bottle? A. It did not.

Q. Were you called upon by your employer in any manner to look into the question of an integrated sprayer? A. Well, the problem of an integrated sprayer that could be shipped had been voiced quite often around Cook Chemical ever since I came with them in 1952, and even when we started thinking about manufacture of the sprayer, the people in the company wanted to make it leak-proof then.

Q. Did anyone in the company ask you particularly to look into the problem? A. Well, it was always somebody who was saying—

The Court: A little louder, if you please.

A. There was always a number of people that knew the need for [313] such a sprayer and were always asking why not make it leak-proof and finally sometime in 1956, we developed some ideas along that line and finally Mr. Martin located some experimental molds.

Q. Did you yourself make any suggestions to Mr. Martin or anyone else at Cook that perhaps you might be able to solve the problem? A. Yes, I did, even before we had the first sprayer, I thought there was a possibility—I didn't know exactly how—but all the possibilities I could think of cost so much money that we couldn't afford to experiment on them at that time.

Q. Tell us what your first thinking was with respect to how you believed the problem might be solved. A. Well, I always thought it had to have an overcap that would seal someplace and preferably on a collar, something that would be definite and accurate.

Q. When did you initially for the first time conceive the idea of using a covercap of some type that would seal on the collar? A. Well, I was thinking about that for a number of months. We thought of different ways that I

might solve the problem and I would carry sprayer parts around in my pocket to the extent that my wife wanted to know why did I have all these papers in my pocket, trying to fit them [314] together and visualize different ways that they might be sealed, and I think the first time I made any inquiry as to overcap was sometime in June, May or June of 1956, I asked the tool and die maker how much it would cost to make a mold with a drill of some kind.

Q. Who was the die maker that you made that inquiry to? A. Mr. John Albert, Albert Tool & Gage.

Q. Did you discuss with him the ideas that you had in mind at that time? A. Yes, I told him that barring any other possibilities, I couldn't think of any means of sealing except with an overcap.

Q. Did you detail to him how you contemplated utilizing the overcap for the purpose you had in mind? A. No, sir.

Q. Did you indicate to him .what you had in mind insofar as sealing was concerned? A. Well, I told him that I wanted some kind of an overcap that could seal someway, someplace, and I was primarily interested in how much an overcap would cost, how much the molds would cost to produce them, because it would have to be a special cap of some kind.

Q. As you developed your discussions with Mr. Turner, did you say? A. Albert.

[315] Q. Did you get any suggestions insofar as cover caps are concerned? A. He told me that at that time at the tool shop he was working on a mold that belonged to Injection Molding Company and that it was an automatic mold, that was something that he thought they could produce a cap at a low cost with an override of that type and he suggested that I see him concerning the cap.

Q. Did you do so? A. Not right away. I kept procrastinating and one time Mr. McGruder of the Injection Molding Company was in our plant because he was furnishing, his company was furnishing us suction tubes for these sprayers, the part that is here (indicating).

Q. The part that goes into the bottle? A. The part that sucks it, yes.

Q. That was in respect to Bakan 1 sprayer? A. That is correct.

Q. Did you ultimately contact Mr. McGruder? A. Yes, at a later date we were having some—his plant was a long ways from ours and at a later date we were having some difficulty in the way these tubes were cut; they were shattering, they were sharp and could cut people, so he was trying to devise a way of making a sprayer cut and he called or something and in our discussion he [316] said he had such a device and he was going to run some of these tubes and he asked that I come out and inspect them.

Q. Do you remember approximately when that was? A. That was either the latter part of July or the first of August, somewhere along in there.

Q. Of what year? A. 1956.

Q. Did you at that time disclose to him what you had in mind with respect to a hold-down cap? A. After observing the cutting of these dip tubes, well, it so happened that his excrusion machine that he was making those on was in the same building with the injection molding machines, and during my inspection of the tubes I noted that these machines were running automatically, there were several machines there running automatically, and it so happened those were the first automatic molding machines I had ever seen, so I went over and inspected the machines and the product and asked him how much he would charge us for a cap that we could use to seal our sprayer.

Q. Did you tell him or show him what kind of cap you had in mind? A. Well, he asked if I had a drawing of exactly what I wanted and I told him, no, that I did not but that I could get some samples, some samples of the sprayer and show him exactly what I thought we wanted.

[317] Q. Samples of the Bakan 1 sprayer? A. Yes, the disassembled samples of the Bakan 1 sprayer and we did get those samples, I am not sure if it was the same day, but I came back and we went over exactly what I wanted and I asked that it be a thread that could be attached to the collar and someone brought up, did we want it the same size as the collar we had on the No. 1 Bakan

sprayer and I said, no, it would have to be large enough that the cap could come over the head, it would have to be a larger collar, and he said, "Well, how large would it be?" I said, "Here are the parts. You can measure them and caliper them." And he said they would make a drawing. We made some sketches in his office or in a conference room of some kind of how we wanted them attached. Well, there were several problems that came up. One was, he asked why we didn't attach it to the cap, and I told him I didn't know any commercially available cap that you could attach it to, and then he brought up, why not make this a plastic cap. I didn't think about it at that time but we thought about this under cap; he wanted to make that a plastic cap. I told him we had considered that but that such a cap would cost several times as much as a metal cap would.

Q. You mean a container cap? A. Yes.

Q. Molded out of plastic? [318] A. Yes.

Q. Onto which the cover cap might be attached? A. Well, he was talking about one that possibly could be attached but we never could figure out how.

Q. Did you disclose to Mr. McGruder what you had in mind at that time? A. I told him that the only way I had been able to figure that we could seal would be to seal on the collar, a collar big enough and seal on that collar and if he could think of any other better way of sealing, I would be glad to think of it, but that was the only way I could think of.

Q. Now, at a subsequent date in the fall of 1956, what efforts did you make insofar as samples are concerned to devise a seal and provide an overcap that was attached to the collar? A. Well, we had experimental molds with various and sundry ways of doing it. In the first place, this first inquiry with Injection Molding, Mr. McGruder was apparently transferred out of town and we didn't hear anything from him for a while and finally when we did, we had a quotation on this cap that it seems to me was something like $25.00 a thousand, which was as much as our entire sprayer material was costing and I thought maybe these screw caps are no good. Maybe we had better try something else. [319] So I again went to Albert Tool

& Gage and discussed it with Mr. Albert and we had several conferences at luncheon and what not where we discussed the possibility of a mold where we could have a snap-on cap, something that could snap all the way over, something that could snap all the way over the container cap and seal so that the sprayer could be shipped in the bottle.

Q. You were thinking of enclosing the container cap within the cover cap? A. Yes, that was one possibility and that type of mold would be rather inexpensive, if we could get one that would seal, so that was the purpose of experimental molds, and we tried several experimental molds. The first one we had was a tall one, because we —well, we just said a certain dimension. We didn't have any good reason for it being tall, but the sprayer was up tall and it would fit over the cap, but when we tested it, it would leak. We went ahead then and changed that mold several times. Finally we got one that was tight enough, and in so doing we finally brought the size of the mold down. I think the samples are here from my deposition that we had on those, and when we did get one that would seal, we couldn't get it off. We broke the sprayer trying to get it off, so we decided that wasn't a good idea, and then immediately we started on experimental molds to make a collar, a screw [320] collar and a cap. At that time we were reminded that with polyethylene we could have a cap that wouldn't need to have a rack mold, we could jump the thread, that when that pulls out and jumps, and that kind of a mold was about one-third of the cost of the so-called rack mold, so we set up experimental molds for this type of device.

[321] Q. And what type of device did you ultimately come up with? A. This was a screw collar and a cap, the cap that is shown in the patent, the square cornered cap was the experimental cap, and we made that several different ways and changed it from time to time, and when we got one that would fit we assembled it and packed it in bottles of Real-Kill and shipped these packages of Real-Kill around the country. We would put half the bottles one way and half the bottles the other way, and shipped them maybe to one coast and back and around quite a

way, and then bring them back and examine them for leakage. And we kept on doing that and modifying the cap slightly from time to time until we—oh, it must have been the latter part of '56 before we finally decided to go ahead and try to manufacture a sealed-in sprayer with an overcap that could be shipped with insecticide.

Q. Now, you spoke of "the patent." Did you have in mind your patent, Exhibit 10 here in suit, Defendant's Exhibit 10? A. The Scoggin patent, yes.

Q. Now, you are down to about December of 1956, is that correct? A. Somewhere along in there. November or December.

Q. Now, subsequent to that what did you do by way of further [322] work on either the overcap or on the collar before you ultimately filed your patent application in March of 1957?

* * *

A. Well, I had many different experiments. For instance, one of the early weaknesses was the fact that the collar and its attachment to the barrel wasn't strong enough to stand shipping, so we enlarged that portion, we enlarged the barrel and made it heavier so that it would withstand shipping stresses, and we continued to occasionally have some seepage from a flat collar that we had at that time. Well, there had been so many people that said why not seal it on the cap—I had always objected to that, because these metal caps are flimsy, cheap things, they cost two dollars a thousand or something like that, they are not very strong, and they are distorted quite a bit when they are put on a bottle. I could never see how we could seal on something like that. But just to explore it, to keep from [323] being hard-headed, we did try to put a rim on the bottom of the cap, and I think one of the caps like that is in Exhibit 7 or 9 of my deposition. We tried putting that on and shipping it. Well, we not only had leakage but we had—some of the collars after the solvent from the insecticide or something softened that collar of the bottle seal, some of those—when they returned, some of the—the whole top part of the sprayer and all was apart, and we hadn't—we didn't have as good sealing against leakage as we had had before.

So then we took that same mold and cut this rim off the bottom, kept it from touching the cap, and shipped it again, and it showed the best results. There was still some seepage. So from an engineering standpoint I knew that to have—to prevent leakage where there is maybe vapor pressure like there might be in an insecticide that is made out of oil, we needed maybe more surfaces to seal and some kind of a wedging action. So sometime—oh, in January or—it was either December or January—I decided that we would have to have a rim around the top there.

Q. December 1956 or January 1957? A. Right. And we had fairly good results with the flat seal, but in my opinion it hadn't been good enough. [324] So when the patent went to Mr. Hovey, I mean when we discussed it with him, we inserted some ridges on top of some of the drawings we already had, telling him we didn't have that part made then, but that was what we intended to do.

Q. Did you instruct Mr. Hovey to include as a part of your invention— A. I did.

Q. —the seal of which you just now spoke? A. I did instruct him.

Q. Are you familiar with the patent that ultimately issued to you? A. Well, quite a bit.

Q. Have you read it? A. Yes.

Q. Have you studied the drawings of that patent? A. Yes, quite a bit.

Q. Will you tell us whether or not from your study of the patent it does, so far as you can determine, disclose what you had in mind in either December or January, as you have just testified? A. It discloses at least the general principle of what I had in mind, particularly concerning the overcap and the seal.

Q. Now, what did you have in mind that the overcap would do other than seal on the collar? A. That it would be a protective cap, protect the sprayer [325] against breakage during shipment. What we normally think that a package, like a bottle there, when it is put in a corrugated case, that the case protects it. Actually when you ship something, ship a bottle in a corrugated case and like in a shipment of a car load or truck load and there are six

cases one on top of the other, well, actually the case on the bottom is supporting the ones on the top and they come down, and it is the bottle and the cap and all supporting the cases above it, so it takes quite a bit of weight, and it is the bottle itself, package itself, that supports the weight, not the case.

Q. Now, what is there in the collar or in the cover cap that absorbs that weight that you are speaking of? A. Well, we had the vertical sides fairly thick, and we made them vertical at first so they would support as much vertical weight as possible. And I have already spoken of the fact that we made the collar, this body or portion of this barrel, we had to enlarge it to give it more strength all the way around (indicating).

Q. Now, after filing of your application in March of 1957, did you in fact then proceed in an effort to commercialize your ideas? A. That is correct, we did. We had decided to go ahead with commercial models before we filed for the patent.

Q. Approximately when did you come on the market? [326] A. I believe it was August '57.

Q. Did you make any tests at about that time insofar as shipment of the product was concerned, to determine whether or not your ideas were satisfactory? A. Well, we made a number of tests along then. In the first place, all of these molds, there had to be a lot of new molds, and they had to be fitted together, and then as soon as we had one model of the cap—incidentally, when we started in production of the cap the sales department wanted it to have more style, so we took the square corners and things off, and after it was redesigned in that manner we made some tests, and certain phases of the cap were a shade too weak. We had to add more material so that we could get the seal.

Q. Did you ultimately make any tests in shipment that were successful? A. Yes, we did. By along the latter part of July we had all the molds and everything, and we had tested, successfully shipped the material, and sometime in August then we made a shipment of the finished sprayers to our packaging plant and started packaging Real-Kill in it for regular shipment.

Q. This was 1957? A. 1957, that is right.

Q. Did you continue with that form of your ideas? [327] A. We used that sprayer, oh, probably at least 15 million of those, maybe more than that, from '57 through '58. We even used some of them as late as '59, maybe some of them even in '60. I don't remember that last part, but even after we started using other models we still used some of those.

Q. Now, we are talking about Bakan 2, is that right? A. Bakan 2.

Q. When did you start thinking about Bakan 3? A. Well, after we started manufacturing Bakan 2 we had a number of people that wanted to be customers of ours. We had designed this original Bakan 2 primarily for Cook Chemical, and everything about it was to fit into machinery that Cook Chemical had. So sometime in '58 we started shipping to some other customers, and our sales department began to contact other people, and we started having inquiries for a sprayer that could be used on a 24-millimeter overcap, a smaller bottle like in the cosmetic field and a number of others. We had used 28 and 26 millimeter caps, which is just about the diameter of this sprayer here. Some of them wanted smaller caps and wanted to use it on smaller caps, and we could manufacture it on smaller caps, but their capping machinery wasn't such that they could install it. In other words, many of them had what is known as a chuck-type capper that came over the top, [328] and it would come over and contact this overcap but wouldn't contact the lower cap, so they had difficulty using it. That hadn't been a problem with Cook Chemical because we had machines that we could arrange to hit both the undercap and the overcap, and in fact some of the things about the original cap, like having a thread that was real steep gradient, we originally intended to push that on, to pop that down over the threads of the collar, and we designed the machine—we have it down at the plant—that was to push that over and just pop it down, and then after the sprayer was put into the bottle we had these rotary wheels—those who are familiar with capping machinery, there is a capper known as a Resina capper. There are many others similar on the market,

but it has rubber wheels on each side, they go in reverse, and we had two wheels that would tighten the bottom or the container cap and one that would tighten the top cap or the overcap.

Q. Simultaneously? A. Simultaneously, on the same machine.

Mr. Conrad: Mr. Schmidt, the last question you asked Mr. Scoggin made reference to Bakan 3. I think you may have in mind Bakan 2 modified, is that correct?

Mr. Schmidt: I suspect that is true, [329] although I will clarify it with this witness, yes.

A. What is that?

Q. (By Mr. Schmidt) Go ahead. I'll get that later. A. The reason I brought that up, there had been a cry from the sales department to get a narrower cap, one that was not so broad so that it could be used on these others, and so the packaging machinery of the customers could use it. We considered that, but there would be quite a bit of mold cost, and then later on—I'm not certain, I think it was in '59—'58 or '59—by the time we began to get competition on the overcap from Calmar Company, the sales department wanted a narrower cap that some of the other customers could use, and Calmar had done quite a good job of selling all the internal seals, and our sales department wondered if we couldn't have some internal seals, too, so we started thinking about both problems at the same time.

Q. Now, Counsel has kindly called my attention to the fact that—

The Court: A little louder, all of you, please.

Q. (By Mr. Schmidt) —that I said Bakan 3, whereas I meant Bakan 2 modified. A. Well, we decided in connection with solving the size of the cap problem, that we would design a cap that could be used [330] on the Bakan 3. That is the reason I went into both of those. And incidentally, one of the reasons that this first cap is this size (indicating) was not only the reasons I gave before. It fit our machinery and our cap. But also at the time that we started making overcaps, so-called super polyethylene or linear polyethylene, the hard material that these are

made out of, it was available in samples but no one would guarantee to be producing it in time for us to go into production with it.

Q. By "these" you mean Bakan 2 modified? A. Well, by "these" I mean Bakan 2. We would like very much to have used linear polyethylene in this (indicating) in the first place. We even tried molding some other parts from—there were other parts that we could make out of linear polyethylene, and there was a number of companies in the U.S.A. then that had samples for tests, but no one had production machinery, they couldn't guarantee us delivery, so we used what is known now as a regular polyethylene, normal polyethylene, the type that most squeeze bottles were made of at that time.

Q. Let me clarify this for the record. Are you saying that by the time that you had got to working with the Bakan 2 modified that a new material was then available to you? A. Yes. It was in production shortly after we came in production with this (indicating), but no one would guarantee [331] us that it would be in time that we thought we would start in production here.

Q. Now, you used that new material in Bakan 2 modified? A. That is right.

Q. And what did you do in Bakan 2 modified that you did not have in Bakan 2? A. Well, in the modified type we were able, since it is a stronger material—you can see it is hard and this other is soft—it was a stronger material, we could reduce the outside diameter quite a bit and still have enough strength to seal. It also had more resistance to oil, to solvency action of the oil base of the insecticide than the other type did, so we were able to take a lot of material, a lot of the beef, the heaviness along here, we were able to take it out, because it is a stronger more resistant material.

Q. The heaviness in the overcap at the base? A. At the base, around where it touches the undercap, the container cap.

Q. Very well. Now, by virtue of that new material, you were able to seal in Bakan 2 modified in a manner different from the way in which you sealed in Bakan 2? A. That is correct. We had considered that way, but

with soft polyethylenes and oils in insecticide they wouldn't hold, the collar wouldn't hold.

[332] Q. And did you come on the market with the Bakan 2 modified? A. Yes. It seemed like the collar mold, which is the part in green there (indicating), the new mold for that portion, and the cap mold came—I think we completed those molds sometime the latter part of 1959.

Q. And went into production yet that year? A. I think we did. Maybe December or something.

Q. Were you clearly in production by 1960? A. Yes. That is the smaller cap for the model 2.

Q. Now, let's go one step more, and tell us about the Bakan 3. What did you do in that regard? A. We had considered a Bakan 3 that would—again we wanted the smaller cap to facilitate use in lots of industries that required small caps—and then since some of our customers had been taught about internal seals, we wished to establish some internal seals, and one way of sealing was to have a diaphragm or something in the top of the—the top of the head, and have something from the cap that would push down on that head, and we were a little concerned about that, because if that works the customer can't put the—can't always get the sprayer cap back on the sprayer. If he takes it and pushes it down like that, this cap would tend to seal up there if he pushes it in a hurry, it would just lock there with the liquid in there.

Q. You mean the ultimate consumer, the housewife? [333] A. Yes, if they wanted it back on there, and it would require pushing this down and slipping it over like that or something (indicating), or pushing it slowly without too much pressure so it wouldn't seal, so we asked the sales department to contact some of the customers to see if that—what the customers thought about that. Well, as I remember, they came back, the customers liked that because it was a way of proving that it sealed.

Q. Now, did that tend to discourage the housewife from attempting to put the cover cap back on? A. Well, if she puts it on a certain way there, it would. I think there was one time that we may have had instructions to throw away the cap. At least some of our customers did, in the

first place, but, see, when you put it down you would fill it with material.

Q. In any event, the Bakan 3 with the diaphragm about which you are now talking— A. Right.

Q. —did not differ from the Bakan 2 modified insofar as the cover cap and collar are concerned? A. Well, the cover cap had a knob or an extension inside that—

Q. That contacted the diaphragm, yes. A. Yes, that came down.

Q. But aside from that? [334] A. This Exhibit 50 is the type head it has, and inside it has a diaphragm and there is a knob in here that pushes down on that, and seals against this plunger.

[335] Q. Now, aside from that, sealing between the knob and the diaphragm, the Bakan 3 and the Bakan 2 modified are the same, are they not, insofar as the cover cap and the collar are concerned? A. Other than the knob, they are exactly the same.

Q. When did you get into production on the Bakan 3? A. Oh, we started trying for production on that early in the spring of 1960. We didn't complete all the molds at the same time. This head mold is a very expensive mold and had many, many parts, had a multiple cam action in two or three ways. As I remember, it was finished sometime in February or March. We completed only one cavity at a time at first to test it to see how it would work.

Q. But you did get into production in 1960? A. As I remember, we actually used some maybe as early as June, maybe a little earlier, but we, as I remember, we didn't have what we called satisfactory production until maybe July or August of 1960.

Q. Did you continue to produce the rest of that year and then in 1961? A. That is correct.

Q. Are you producing it today? A. Yes, we are.

Q. You say that the Bakan 3 has completely taken the place [336] of the Bakan 2 modified? A. Not at all. Some of our largest customers prefer the Bakan 2. Actually from my viewpoint of production, I think the Bakan 2 is as good as the new.

Q. What is the production? Are you selling more than one? A. I tell the sales department that we manufacture Bakan 3 with all these internal seals just for salesmen and purchasing agents, that they like to look at all these things and think they are important, but actually in the United States you can't ship a thing that is so dangerous to people that it will hurt them to get a little on their hands. If there is a little in the cap and actually when you get the internal seals, if you should have one of the seals leak into the cap, then the one at the bottom will hold and will not drain back, but in the Model 3 it will drain back—I mean the Model 2, it will drain back and usually does, but if anyone uses one of these sprayers, regardless of what product they use it on, I have seen very few people who were so neat that they didn't get some on them, and so from a practical standpoint I have never seen any great advantage of any seals other than the seal on the collar and the cap to keep the material within the package.

Q. Are you familiar with the volume of production? [337] A. Well, I can't quote exact figures.

Q. Generally speaking. A. But, generally speaking, we are still producing in the millions of Model 2; in fact, I think we had maybe one customer that uses one million and he took it and started using it after we had Model 3.

Q. You also are producing in the millions with respect to Bakan 3? A. Yes.

Q. Approximately how many are produced each day? A. Well, normally, without a lot of extra shifts, about one hundred to one hundred ten thousand per day of any given model.

Q. Is that today? A. Yes.

Q. Does that continue day after day? A. Right, sometimes.

* * *

Cross-Examination by Mr. Conrad.

Q. Mr. Scoggin, when did you say was the earliest date at which you had some kind of a drawing or some kind of a [338] written description of the idea of making a seal between the retainer and the overcap, I mean for putting

a web on the retainer such as shown in that model that is at your right? A. Well, as I remember it, from the exhibits we had at the deposition, which included all of the old drawings that we kept around, as I remember there was an exhibit that came from Hovey's office where the rims had been added to a former drawing.

Q. I now show you what was marked in your deposition as Exhibit 48, and ask you if this is the drawing you refer to? A. No, that isn't the one. That may be an earlier one, I don't know. I forgot about that one.

Q. Well, do you recall the date on which you made this drawing which you say you had sent to Mr. Hovey? A. I remember there were two copies of essentially the same drawing in the deposition file. One is 39 and one is 37, and 39 is identical with 37 except that it has the ring on it. That was the drawing that was given to the patent attorney for drawing up the patent.

Q. I think I have found it. I now hand you a one-sheet drawing and ask you if this is the drawing you have just referred to? A. Yes, this is my sketching on it.

[339] Q. Is this the earliest sketch you made of the idea of some kind of a rim attached to it? A. That is the first time it was given to the Patent Office, I know that, and I forget just the date of the 38 you gave me there. I would have to look at it.

Q. Before we do I will mark in evidence the document which you have just identified which was Exhibit No. 39 in the Scoggin deposition as Plaintiff's Exhibit J.

(Plaintiff's Exhibit J marked for identification.)

Q. Again returning to you, Mr. Scoggin, the paper that is marked "Scoggin Deposition Exhibit No. 38", do you wish to examine that again and tell us if you can if that was made before or after the sketch which is now Plaintiff's Exhibit J? A. I don't remember.

Mr. Conrad: Now, will you please mark the paper about which Mr. Scoggin just commented, that is Scoggin Deposition Exhibit No. 38, as Plaintiff's Exhibit K, please?

(Plaintiff's Exhibit K marked for identification.)

Q. Mr. Scoggin, I again return to you what is now Plaintiff's Exhibit K, and ask if it isn't a fact that in that drawing the bottom of the overcap skirt comes down into con-

tact with the top of the bottle cap? A. Apparently it does. [340] (Plaintiff's Exhibits L and M marked for identification.)

Q. Mr. Scoggin, I have just had marked as Plaintiff's Exhibit L, a two-page memorandum and as Plaintiff's Exhibit M, a one-sheet drawing which was formerly Scoggin Deposition Exhibit No. 37. I now hand those exhibits to you and ask you if you can tell what they are? A. Well, the first Exhibit 37 is another copy of the Exhibit 39 that we had in our hands a moment ago. I have forgotten what number you gave it here, but the other one has the ridges added. This is one without it.

Q. What is the date of that drawing to which you are now referring? A. It looks like February 11th.

Q. In which year? A. '57. This one is cut off. I think the other one shows it better.

Q. Can you make out the date, "February 11th"? A. I get it from the other one. It is the same one.

Q. Now, what is the other exhibit which I have handed you? A. This is a letter from Chet Turner addressed to me and to Roland Rhodes, and it goes over the various changes to be made in sizes and whatnot of various parts after we had decided to go into commercial production of Model 2.

Q. Does the memorandum which you are now referring to in its [341] text refer to Plaintiff's Exhibit M, which is the drawing? A. I don't remember whether it does but there are certain changes here that had to do with modifying the shoulder and whatnot and it probably does.

Q. You can tell from the dimensions referred to in the memorandum, Exhibit L? A. Yes.

Q. It does refer to this drawing which is Exhibit M? A. Yes.

Q. Now, this drawing, Exhibit M, was made on February 11, 1957, and it shows a retainer which does not have any kind of a sealing rib on the upper surface? Did you observe that? A. I did. That is the reason it was changed before it went to Hovey.

Q. I see. And in that event it went to Mr. Hovey sometime after this date? A. Probably about the same date.

As I remember, something about February 11th, we had scheduled a conference to plan commercial production of Model 2 and I know that this conference was between me and Chet Turner and Roland Rhodes may have been in it, too, since his name is there. I don't remember. And during that conference we were referring to that drawing.

[342] Q. I see. Now, I notice in the Plaintiff's Exhibit L, under Paragraph "B", "Collar (Ring)." "2. Consider placing a ridge on top of collar to act as seal between collar and cover cap." A. Yes.

Q. Do you recall that? A. Yes.

Q. And did you eventually do that? A. Well, this memorandum was something that we eventually intended to use as a basis for discussion with the tool maker and if such a rim could be put on there, we wanted to do it. That is what we meant.

Q. Such a rim was eventually put on as indicated in the patent drawing, for example? A. When we made the commercial drawings we put it on, yes, sir.

Q. Just what were the circumstances that led up to your making and filing the application for patent which resulted in the '943 patent? A. I am not sure I understand what you mean by "circumstances".

Q. Well, did you some time have an idea that you wanted to get some patent protection on an overcap idea that you had and then cause a search to be made in the Patent Office records? A. I am sure we had some searches made but I think we didn't— [343] we had been considering this idea for several months in making an experimental mold and when we started to spend enough money to go into commercial production, we thought we should have patent protection, if possible.

Q. Were these searches made before you filed your patent application? A. I don't remember that for sure.

(Plaintiff's Exhibit N marked for identification.)

Q. Mr. Scoggin, I hand you what appears to be a letter written on your behalf to Mr. Hovey, which has been marked as Plaintiff's Exhibit N. Do you recognize it as such? A. Yes.

Q. Do you observe that this letter is dated January 14, 1957? A. Yes.

Q. You say in the first paragraph of the letter, "It has been decided that we go ahead and make the patent application for the plastic cap and screw collar for our plastic spray"? A. Yes.

Q. And then you go on and say in the third paragraph, "You will note that we no longer have the device for making the liquid drain back into the bottle"? A. Apparently that letter confirms that he had made a [344] search before. We had tried having a device, or a hole so that the liquid would drain back into the bottle but it wasn't practical, it didn't work. When it would drain back it would spill out on the spray.

(Plaintiff's Exhibit O marked for identification.)

Q. Mr. Scoggin, I have marked as Plaintiff's Exhibit O one sheet of drawing that bears the date October 5, 1956. I am going to hand that to you and ask you if you can tell us what that is? A. This is one of the experimental drawings, a part drawing in connection with experimental mold for a collar and overcap.

Q. Now, do you have that drawing available prior to January 14, 1957, when you wrote to Mr. Hovey? Do you know whether or not you supplied that to Mr. Hovey before the patent application? A. I am not certain whether it was a drawing or an actual sample of the device from these molds.

Q. So it might have been this drawing showing this or it might have been a device you made up from such drawing? A. Yes.

Q. Now, I notice in this drawing which we have just identified as Plaintiff's Exhibit O, that the bottom of the overcap comes in contact with the top of the bottle cap. Did you observe that? [345] A. Yes, we made it that way on purpose. We wanted to try it. And as I mentioned a while ago we wanted to try something and see what could be done so far as sealing on the cap and we could cut something off of the parts, but we couldn't add it.

Q. Do you have or are you aware of the existence of any other drawing with the kind of a cap explained in Plaintiff's Exhibit O, that shows a clearance beneath the rim of the overcap prior to the date of October 5,

1956? A. It seems there were others in the deposition file. I don't remember for sure.

[346] Q. Now, I notice in your letter to Mr. Hovey, Plaintiff's Exhibit N, you stated that you "plan to be out of Kansas City all during the week starting January 14, and therefore I would like to discuss this patent application with you sometime during the week of January 21." Do you recall having a discussion with Mr. Hovey about this patent application during the week of the 21st? A. I don't recall exactly where it was. Sometimes we had our discussions at luncheon, and sometimes he came to our office, or sometimes I went to his office. I don't recall exactly when we got into that with him.

Q. But do you remember having a discussion with him that week? In that connection, Mr. Scoggin, I will let you examine this sheet of paper, which was furnished to us as purporting to be a record kept by the draftsman in Mr. Hovey's office. A. Apparently I did see him, because he has a draft dated here January 22.

Q. Yes. Do you remember talking with the draftsman and showing him what it was that was to be depicted in the drawings of the patent application? A. Not specifically. I may have talked with Hovey.

Q. I see. Now, what was the next transaction in your dealing with Mr. Hovey concerning this matter of getting a patent application on file? [347] A. Well, sometime along there he wrote the patent up, and we discussed it some. There had been several discussions maybe after that 22nd date there.

Q. I see. A. As I remember, I probably talked to him about this ridge actually in February.

Q. Yes. A. I don't remember how long it took him to make an initial draft.

Q. Well, did you get your draft of the application before or after you talked with him about the ridge, which I assume is what is shown as rib 56 in the patent drawing? A. I think that we—we had some discussion, I know we had a discussion before he had a final draft of it.

Q. You say before he had a final draft of it? A. The only thing I remember is that when it was written up, as written it didn't have any claims, as I remember, that spe-

cifically stated anything about sealing, and I told him that sealing, having something that could be sealed in a bottle and shipped, was the primary purpose of this thing, I mean that was the most important fact, and he said, well, he didn't want to put that into the claims, because they would make the claims more narrow, and as I remember, he pointed out some place in the text of it where there was some mention of [348] sealing.

Q. I see. So your point is that you emphasized to Mr. Hovey that the important thing about this invention was this matter of sealing? A. Well, it was one of the—you could have all the others, and if it doesn't seal, it still couldn't be shipped, and we wanted something that could be shipped.

Q. I see. And you say you recall emphasizing this in your discussions with him before the application was filed? A. Yes.

Q. Well now, you talk about getting a draft of the application. How did you get the draft? A. Oh, probably U. S. Mail.

Q. I see. Do you recall whether you got this draft after you talked with him about putting the ridge on top of the retainer? A. Yes.

Q. That was the first draft? A. I remember specifically seeing the drawing that is in the patent.

Q. That was the first draft of it that you had got, ready for signature? A. That was the first one ready for signature, I think. There had been maybe some pencil sketches or something before.

[349] Q. But in any event, your recollection is that the first draft that came to you more or less in finished form, with the oath attached and accompanied by the drawings, is the one you signed? A. I'm not too sure about that. Because of this discussion it may have been something that came back.

Q. Well now, tell me what you have in mind that might have occurred? A. Well, I told you about the discussion about sealing.

Q. Yes. Now, at the time that you had the—let's get this straight. At the time you had the discussion about

sealing you had not yet received this draft of the application, is that correct? A. Well, it seemed like there was a draft. That's what brought up the discussion.

Q. Oh, I see. You had gotten a draft— A. Yes.

Q. —of the application? A. Yes.

Q. Was that a final draft ready for signature, do you know? A. I don't know. I don't remember the exact date that that was.

Q. I see. But your recollection— A. It seems like that was at lunch one day, and then we got this other later on.

[350] Q. I see. Your recollection is that you got this draft and then it occurred to you that you had better emphasize to Mr. Hovey that this matter of sealing is important, and then as a result of that some changes were made? A. Well, changes at least in the drawings. I'm not sure whether he—he didn't have any final drawings, but he may have had pencil drawings.

Q. I see. A. Because he had been given some of the former parts to make the drawings from.

Q. But you do have a clear recollection of having emphasized to Mr. Hovey before this application was put in its final form that this matter of sealing was important? A. That is correct.

Q. Now, Mr. Scoggin, I am looking at the introductory part to your patent application. The first paragraph states, "This invention relates to improvements in structures for dispensing liquids wherein is provided a spray-type hand pump mounted within a container for the liquid through use of the closure cap of such container." Your counsel has been kind enough to hand you a copy of the patent. I'm sorry I overlooked doing that. Do you see the first paragraph to which I refer? A. Yes, sir.

[351] Q. Now, that says nothing about sealing, does it? A. No, sir.

Q. Then the next sentence, in the second paragraph, says nothing about sealing? A. Well, there is reference to insecticides. Of course, they are very difficult to seal. There would be no direct reference, no, sir.

Q. Well, it says nothing about sealing. As a matter of fact, it just refers to the Martin patent, doesn't it? A. Yes, sir.

Q. And that is not a sealed—that is not in any manner or means a sealed sprayer, is it? A. That is right.

Q. And then the following sentence that begins, "The pump includes a vertically reciprocable plunger," that again is just a further description of the Martin device, is it not? A. There is nothing in that paragraph.

Q. Now, the third paragraph, in which it tells about the difficulties which have been experienced by virtue of the inherent nature of such structure since accidental actuation of the plunger causes dispensing of the fluid and oftentimes the material is used in part by store employees prior to sale because of the ready accessibility of the pump itself—now, that says nothing [352] about sealing, does it? A. That is correct.

Q. Now, that is also puzzling to me in another respect, Mr. Scoggin, which you probably recognize. Isn't it a fact that none of those Martin pumps were ever shipped mounted in the bottle so that there was no possibility of the plunger being actuated accidentally in the course of shipment or, of course, by a store employee? A. Well, there were many other reasons why they couldn't be shipped.

Q. Oh, yes. But the fact is that they weren't shipped. A. It was a sprayer similar to that, is the way I read it.

Q. Yes. Well, in any event, due to the fact that they never were shipped in the bottle, mounted in the bottle, you wouldn't have the particular difficulty which happens to be mentioned in the third paragraph of this patent. You never would encounter— A. Well, they weren't in the bottle, they were on a collar on the bottle, that's the way they were mounted. That's what that refers to, is the old-type package, on the collar.

Q. Yes, exactly. Well, accidental actuation of a sprayer attached to the collar isn't going to dispense liquid, is it? A. No, sir.

[353] Q. Well then, this is really a misunderstanding here in this particular paragraph? A. It may be to you, but it isn't to me.

Q. Well, let's go into this a little bit. A. All right.

Q. It's about time I do learn something about it. Here we have—this is representative of the manner in which the Martin sprayer was used in the prior art (indicating). A. Yes.

Q. We have heard that earlier in the case. Is that right? A. Yes.

Q. It was shipped in this manner (indicating)? A. Yes, sir.

Q. And when it got into the store it was put in the shelf in this manner (indicating)? A. Yes.

Q. Very well. Now, visualize that on the shelf of the store, and visualize it having arrived there in the manner I have described, and let me read this pragraph to you: "Difficulties have been experienced in the field by virtue of the inherent nature of such structure since accidental actuation of the plunger causes dispensing of the fluid and oftentimes the material is used in part by store employees prior to sale because of the ready accessibility to the pump itself." Now, I can [354] understand the latter sentence, that the pump could be said to be readily accessible, the clerk could take the top off and put the pump in and then spray, but now with respect to the first sentence of that paragraph, what possibility is there of accidental actuation of the plunger? A. Well, that would be if it was shipped in the bottle.

Q. Yes, if it were shipped in the bottle? A. Yes.

Q. But we have just agreed, haven't we, that it was not shipped in the bottle? A. No, not at that time.

Q. Yes. Well, I think we have straightened that out. I don't think you need to be too concerned about a slight discrepancy like that, Mr. Scoggin. A. I'm not.

Q. Now, the fact is, however, that that paragraph says nothing about sealing? A. That is right.

Q. Then you go down and start on the objects of your invention, and it says, "The most important object of the present invention, therefore, to provide structure for rendering the pump inoperable during shipment and while in storage, as well as on the shelves of the retail dealer." Now, that says nothing about—that says nothing about sealing? A. No, sir.

[355] Q. Then you go on and say, "Another important object of the present invention is to provide structure capable of carrying out the functions as set forth above, which is also adapted to enclose the head of the plunger and thereby protect the same, as well as handlers of the merchandise by virtue of the fact that the said plunger is completely enclosed and held at the innermost end of its reciprocable path of travel." Now, that says nothing about— A. I think it does, quite a bit.

Q. I see. A. Something that is completely enclosed should be sealed.

Q. Should be sealed. A. And then to "protect same, as well as handlers." To me, being in the insecticide business, most people don't know that the U. S. Bureau of Agriculture approves all these insecticides so that you can drink them. Some people say safer than whiskey, but most people think they are poisonous to people and they don't wish to have it on their hands and so forth. That would be the handlers.

Q. Yes. A. If it leaked the only way you could protect the handlers would be to keep it from leaking. I don't believe the sprayer could bite them.

Q. I see. But I do want to remind you, Mr. Scoggin, that this [356] morning you told us that these things broke off and made sharp points sometimes and people were cut and so on. A. That is right.

Q. Now, if you had an overcap on there and that thing couldn't break off and so on, it couldn't represent a threat to a person as a possible way of cutting them. Now, I know in the morning you were referring to the dip tube. A. Yes.

Q. But I believe somebody else mentioned earlier that you had damage to sprayers during shipment. Now, when it says here that the enclosure of the head protects the handler, why doesn't it mean just as well that it protects them against being cut by the edges of a broken pump? A. Well, it probably could, but since I was so familiar with insecticides that wasn't what it meant to me.

Q. Yes, I see. So to the extent that that inference can be drawn which you have just drawn, you say that this paragraph mentions sealing? A. Yes.

Q. Which you agree with me, it doesn't mention it in such a manner that would give the ordinary reader the impression that sealing was the big feature of this invention? A. Well, the ordinary reader doesn't read patents.

Q. I see. Now, letting that one go, let's get down to the next object where it says, "The further object of the [357] instant invention is to provide a hold-down cap that may be quickly and easily applied and removed by virtue of a releasable attachment to a part of the entire unit such as by the use of a screw-threaded interengagement." Of course, that says nothing directly about sealing either, does it? A. No, sir.

Q. And that same is true of the next statement of object? A. Correct.

Q. It talks about using a part of the unit in order to hold down the closure cap. So there is really nothing said directly about sealing in the statement of objects of the invention, is there? A. Well, only the part that I have pointed out there.

Q. Yes, sir. Keeping in mind that you feel that that inference can be drawn from the one statement. A. I don't think.

Q. Now, if we turn over to the original claims—and by the way, Mr. Scoggin, there were 15 claims filed in the original case. I now hand you Plaintiff's Exhibit E, which is the file wrapper of your patent. Now, one might say that 15 claims is a good many claims to be devoted to a structure of this kind, yet as far as I can see, Mr. Scoggin, none of the 15 original claims made any reference whatever to sealing. [358] A. I think that is right.

Q. By the way, what did you mean, what did you have in mind when Mr. Schmidt asked you a question which involved the term "integrated sprayer"? A. Well, that is a sprayer that can become a part of the package and is so constructed that it can be shipped with the package, and it is a part of the sprayer and—I mean part of the package, part of a complete package, integrated into the package, an integral part of the package.

Q. I see. By the way, before you filed this patent application you looked at this prior art which Mr. Hovey had found, didn't you? A. I think I did.

Q. And you remember seeing there this Lohse patent? A. I don't remember it specifically, no.

Q. Yes. Well, a little later on we will put in the record the numbers of the patents which Mr.— A. What I mean, I don't remember it at the time there. We may have written a report on all the former patents. I'm not sure.

Q. Well, a little later on we will put into the record a list of the patents which were discovered by Mr. Hovey's office when they made that search, and it includes the Lohse patent, and I was wondering if you recollected it? [359] A. I think so. I remember it now, anyway.

Q. Also by agreement, at a later time, we will put in the record this sample of the Lohse sprayer with overcap, which was in use in the industry I believe prior to 1940. Have you seen this? A. Yes.

Q. Is that an integrated sprayer? A. I would say so, yes.

* * *

[360] Q. Mr. Scoggin, so far as you know at the moment this drawing which is apparently based on the drawing made on February 11, 1957, by the addition of a rib to the top of the retainer shown in the February, 1957, drawing was the first drawing of the device which includes the sealing ring of that kind for use with an overcap where the overcap may have a clearance at the bottom of the skirt. Now, do you know of any other drawings, sketches or descriptions of any kind which describe the structure as shown in your patent drawing that bears an earlier date than that? A. Well, if I remember, there are probably some sketches there. It seems like the 38 had ribs on it and at an earlier date.

Q. As I recall it, Mr. Scoggin, you are unable to give us a date as to when the sketch was made that is shown in your Deposition Exhibit 38? A. That is right, I am not sure when that was made, but that could have been a sketch made in connection with the tool maker. I am not sure whether it was the tool maker or somebody else.

Q. You say it could have been made prior to February 11, 1959? A. Yes, it could have been. I am not sure when it was made.

Q. The fact is, when Mr. Turner was making up the drawing of Plaintiff's Exhibit M, it was dated February 11, 1957, he [361] did not show there any rib on the collar although this apparently was intended to portray your latest thinking on that spray? A. We have no engineering department at Cook Chemical and Chet Turner has to be a man who is good at drafting, you can see from that, more or less almost freehand, and he took the parts. His assignment, as I remember, was to take the parts that we had and draw up a drawing so we could go to the tool maker.

Q. Wouldn't you say that the drawing made by him at this time would have incorporated all your latest and best thinking on the subject? A. Not necessarily. He probably took the parts and made that.

Q. Who specified the details of the structure which he would draw up? A. I think all of that was taken from actual parts that we had in this experimental matter.

Q. Do I understand the only way you feel that you can go back of this date of February 11, 1957, was an expected showing of some reduction of practice of the idea of the sealing rib on the retainer which would cooperate with some part of the overcap to form the seal and in this structure would also have clearance between the lower skirt of the overcap and the top of the container cap is by virtue of Plaintiff's Exhibit K, formerly your Deposition Exhibit [362] 38?

* * *

A. The first part of the question about the ribs, they are in there. So far as the other part, it is not here. We were earlier than that, I say when I was conducting all kinds of experiments. What had seemed to be a very simple thing when I started out, it turned out to have more complications than I had thought. We had tried everything. Probably at the time of this drawing we had a [363] cap. There is one in the exhibits here where we actually tried sealing on the cap and found that we couldn't.

Q. Found that you couldn't? A. We couldn't do it successfully.

Q. I see. Well, just in plain language, Mr. Scoggin, here is what I am after. We are trying to find out when you in effect invented what you show in the patent and so far as we can see from the papers we have in front of us, the first proof that you have, are these papers that are dated February 11, 1957. Now, what I want to know is if you know of any other documents or papers or sketches, or even products that embodied what is shown in the patent drawing and which are earlier than that date? A. Well, the first part of your question had to do with this exhibit.

Q. Yes. A. And that could be, yes, to the first part of it. The latter part of it, I don't know of any other drawing other than the patent drawing itself.

Q. Now, I just want to mention to you, Mr. Scoggin, in taking your deposition we asked you a few questions about that or your Deposition Exhibit No. 38, as follows—you were asked something about who prepared this drawing of February 8, 1957, Exhibit 37, which is that drawing you said was made by Mr. Turner, and you answered Mr. Turner [364] made that. Then you were asked:

"Q. And he is employed, I believe, by Bakan, or was at that time? A. He is—was and is—

Q. He still is. Who prepared this sketch, Exhibit 38, which is the question directed to you. You answered:

"A. I prepared that."

Q. Approximately on what date? A. Somewhere in between these—let's see, is there a date on that one—2-11.

Q. The next one in order is dated March 4. A. It was sometime between March 4 and February 11.

Q. That this sketch, Exhibit 38, was prepared? A. Yes.

Q. Do you recall that? A. I believe I do.

Mr. Schmidt: What page was that?

Mr. Conrad: I am very sorry, Mr. Schmidt. I was reading from the deposition of Mr. Scoggin taken on the 18th day of November, 1959, pages 171 and 172.

* * *

[365] Mr. Schmidt: If your Honor please, on Monday we interrupted reading the depositions in the evidence.

We had two more, one of Andrew M. Martin and another of E. G. "Pat" O'Reilly. I think we will not read them into evidence at this time and delay the trial.

The Court: I think that is a good idea. They will be in evidence and any matter in there, if you want to make a suggestion in the record, it is all right.

Mr. Schmidt: I think that is not necessary. I can cover that in my brief.

The Court: That will be fine.

Mr. Schmidt: So I have had the Martin deposition marked as Defendant's Exhibit 136, and the O'Reilly deposition as Defendant's Exhibit 138.

Now, I believe that all of the defendant's exhibits, both physical and documentary, have now been marked and identified by the reporter and dated and rather than go down one by one, I now offer in evidence each and every one of the defendant's exhibits.

The Court: Very well. Show all the exhibits that [366] have been marked on behalf of the defendant will be received in evidence.

Mr. Schmidt: And with that defendant rests.

* * *

---

[380] PLAINTIFF'S CASE

Whereupon, the plaintiff, to sustain the issues in its behalf, offered testimony, oral and documentary, and made the following admissions, to wit:

(Plaintiff's Exhibits P, Q, R, S, T, U, V, W, X, Y, Z, AA, BB, and CC marked for identification.)

Mr. Conrad: Your Honor, during the course of Mr. Scoggin's testimony, he made reference to the [381] Bakan 1, Bakan 2, Bakan 2 modified, and Bakan 3 sprayers, and some of the other witnesses have, also, and I am now offering as Plaintiff's Exhibit P, an illustration of the structure of the Bakan 1 sprayer, as Plaintiff's Exhibit Q, an illustration of the Bakan 2 sprayer as first made, which has been referred to in the evidence as the Bakan 2, as Plaintiff's Exhibit R, a sketch of the Bakan 2 modified,

and as Plaintiff's Exhibit S, a sketch showing the Bakan 3 sprayer. Mr. Schmidt would like to state a qualification.

Mr. Schmidt: I have no objection other than the fact that we do not admit that these sketches necessarily truly represent the precise nature and details of the devices in question, and with that exception we have no objection to their going in.

The Court: Very well. All right, they will be admitted in evidence.

Mr. Conrad: Your Honor, I offer as Plaintiff's Exhibit T, a certified copy of United States Patent 2,119,884, granted June 7, 1938.

The Court: What is the name of that patent, Mr. Conrad?

Mr. Conrad: Lohse, (spelling) L-o-h-s-e. That is it.

The Court: Admitted in evidence.

Mr. Conrad: As Exhibit U, certified copy of [382] patent 2,586,687, granted February 19, 1952, to Russell Mellon.

Mr. Schmidt: No objection.

The Court: Admitted in evidence.

Mr. Conrad: As Plaintiff's Exhibit V, a certified copy of patent 2,861,839, granted November 25, 1958, to Russell Mellon.

Mr. Schmidt: No objection.

The Court: Admitted.

Mr. Conrad: As Plaintiff's Exhibit W, a certified copy of patent 1,714,874, granted May 28, 1929, to John M. Hothersall.

Mr. Schmidt: No objection.

Mr. Conrad: As Plaintiff's Exhibit X, a copy of British patent 737,210 dated April 2, 1954, to Universal Metal Products, Limited, et al.

Mr. Schmidt: No objection.

The Court: It will be admitted without objection.

Mr. Conrad: As Plaintiff's Exhibit Y, certified copy of United States Patent 2,434,875, granted January 20, 1948, to Frederick M. Turnbull, et al.

Mr. Schmidt: No objection.

The Court: Admitted.

Mr. Conrad: Your Honor, I offer in evidence as [383] Plaintiff's Exhibit Z a physical model of the so-called Lohse sprayer, with overcap.

The Court: Admitted in evidence.

Mr. Conrad: It has been stipulated, your Honor, that this was in use in this country prior to 1940. Is that satisfactory?

Mr. Schmidt: Yes, that's fine.

Mr. Conrad: I now offer as Plaintiff's Exhibit AA, a closure consisting of two pieces threaded together, bearing a tag marked "Baker Cap". It is stipulated that this device was in use in this country prior to 1955.

Mr. Schmidt: No objection.

The Court: Admitted.

Mr. Conrad: I offer as Plaintiff's Exhibit BB, a section model of the cap offered earlier as AA.

Mr. Schmidt: No objection.

Mr. Conrad: Your Honor, I offer as Plaintiff's Exhibit CC, which consists of three sheets of writing and one sheet of drawing and which sets out interrogatories 8 and 9 directed by the plaintiff to the defendant, and defendant's answer to those interrogatories, and as the fourth sheet the drawing referred to in the interrogatories, subject, of course, to the defendant's right to introduce the remaining interrogatories and answers.

Mr. Schmidt: No objections.

[384] The Court: Admitted.

(Plaintiff's Exhibits P, Q, R, S, T, U, V, W, X, Y, Z, AA, BB, and CC received in evidence.)

Mr. Conrad: Mr. Turner, please.

---

CHESTER M. TURNER,

being produced, sworn and examined as a witness on behalf of the plaintiff, testified as follows:

Direct Examination by Mr. Conrad.

Q. Please state your name, Mr. Turner. A. Chester M. Turner.

Q. Where are you employed? A. For Cook Chemical Company.

The Court: Cook?

The Witness: Cook, yes, sir.

Q. (By Mr. Conrad) How long have you been employed there? A. Between 13 and 14 years.

Q. I see. What is your job? A. My job is plant manager of a production plant.

Q. What is it that is produced by Cook which you oversee? A. Which I oversee is sprayers.

Q. I see. And how long have you had that particular job? A. I'm not sure. It has been probably—approximately four years.

Q. I see. Now, what was your work as of, say, February of 1957? [385] A. I would say that was probably my job at that time.

Q. Were you, at that time, working under Mr. Scoggin in connection with the preparation to manufacture overcap sprayers? A. Yes. I think I was. I'm not sure about that date.

Q. Let me show you Plaintiff's Exhibit L and also Plaintiff's Exhibit M and ask you to look at them. Do you recognize those papers, Mr. Turner? I don't mean to interrupt your reading of them, but I wonder if you recognize them, first of all? A. Well, the drawing is vaguely familiar. I can't quite place the letter.

Q. The letter is apparently a memorandum written by you to Mr. Scoggin and Mr. Rhodes concerning some changes that are to be made in that drawing which you have in your hand, is that correct? A. That's what it looks like, yes, sir.

Q. Now, do you remember—

The Court: Will you talk just a little bit louder, please, Mr. Turner, so these gentlemen can hear you? It is awfully hard to hear back there if you don't speak right out. I can hear you but they can't; they don't know what you're talking about.

Q. (By Mr. Conrad) Is this memorandum, Mr. Turner, a memorandum of a meeting that had occurred

earlier? [386] A. It is hard for me to say. It looks like it probably is.

Q. Now, you will notice that on the first page, under paragraph B, Arabic numeral 2, it says, "Consider placing a ridge on top of collar to act as seal between collar and cover cap." Do you see that? A. Yes, sir.

Q. Do you have any recollection of why that recommendation was made by you, at least mentioned by you in your memorandum? A. No, sir, I can't remember too much that far back.

Q. You don't remember—do you remember that—or what were you doing in connection with Mr. Scoggin at that time in an effort to work up a commercial sprayer? A. Well, I was probably assisting him in that I would be in charge of the production of this model and to work it out where anything that came up could be produced.

Q. I see. Now, at this time you were actually manufacturing the so-called Bakan 1 sprayer? A. I think that is right, yes, sir.

Q. Do you know what I mean by the Bakan 1 sprayer? A. Yes.

Q. You were manufacturing that, that sprayer, at the time this memorandum was written, is that correct? A. I'm sure we were, yes, sir.

Q. Now, do you recall that at some later date you eventually [387] arrived at what you regard as a satisfactory design for a sprayer with an overcap? A. Yes, sir.

Q. Now, do you remember any of the events which occurred between the date of this memorandum and the time when you arrived at this satisfactory design for a sprayer with an overcap? A. Well, very little, except I think there were samples made and tested and it went on from there. I don't know the exact dates.

Q. I see. You have, I assume, a fair understanding of how these sprayers work, particularly the Bakan 1? A. Yes, sir, I would say so.

Q. Now, were you also plant manager during the time when Bakan 2 was being produced? A. Yes, sir.

Q. Now, what were the procedures followed in uniting the retainer to the barrel extension when you first started to make the Bakan 2 sprayer? A. The barrel to the collar, you say?

Q. Yes, sir. A. There was a solvent application made and more or less welded together with a solvent application.

Q. A solvent? A. Yes, sir, a solvent application.

[388] Q. Oh, a solvent application. A. Which would weld the two pieces together.

Q. Then what was done with it after this solvent application was made? A. Well, then it would be complete other than the addition of the protective cap.

Q. Well, to which piece was the solvent applied? A. To the barrel, I believe you referred to it.

Q. The solvent was applied to the exterior surface of this barrel extension where it comes up through the collar? A. Yes, sir.

Q. And then, as I understand you, the so-called collar was put down or telescoped over the outside of that barrel extension? A. Yes, sir.

Q. Now, was this solvent allowed to set up and harden before you did anything else with it? A. Well, there was —I wouldn't say it was allowed to set up and harden. There was a time lag between when that was done and anything else that was done to the sprayer.

Q. In other words, that would be a good, firm bond by the time you got around to say putting the cap on? A. I would say so.

Q. Now, are you familiar with—do you have any familiarity at all with the strength of the bond you get by this [389] uniting with solvent such as you have described? A. Well, yes, I would say it was very strong.

Q. Very strong. Well, suppose I wanted to try to—after this had set up the way you describe—suppose I wanted to try to screw down this collar so that the bottom of the collar would touch down here (indicating)—see what I mean—then, if I screwed it further, then you see that might pull this retainer off or collar off, if it weren't united firmly. You see what I mean? A. Yes, sir.

Q. You think I could do that by screwing down the cap? A. In most cases, no.

Q. What do you mean in most cases? A. Well, if there was a proper application of solvent.

Q. In other words, if you did your job right, then that could not be done? A. I wouldn't think so.

* * *

---

[399] RALPH G. MARTIN,

recalled as a witness on behalf of the plaintiff, testified as follows:

Direct Examination by Mr. Conrad.

Q. You are the same Mr. Martin who testified earlier? [400] A. Yes, that is right.

Q. This is just for the purpose of the record, Mr. Martin; I have no doubt about it myself. Mr. Martin, you are familiar with the Wilco Company who I believe manufactured this product identified as Plaintiff's Exhibit B? A. Yes, sir.

Q. Now, if I understood from what was said that you sell them the sprayer? A. That is true.

Q. Do you have any business relations with the Wilco Company other than that of supplier and customer of dispensers? A. We are both a customer of Wilco and they are a customer of ours.

Q. In what respect are you a customer? A. We buy that starch from them.

Q. Do you have some arrangement with them whereby you distribute their product? A. That is right.

Q. Is there any kind of license agreement? A. Yes, there is a written arrangement with them.

Q. I see. And how old is that agreement? A. I don't think it is a year old yet.

Q. And do you recall how long ago you started negotiating? A. No. We talked about them distributing west of the Rocky Mountains, generally in the western eight states, and they [401] were very successful in California, and they wanted representation east of the Rocky Moun-

tains and we didn't know whether to get into it or not. We had some other things to do.

Q. You say the agreement is about a year old so you say you perhaps started negotiating as far back as sixteen months ago? A. Well, it took us a long time to make up our mind. The actual negotiation didn't take very long.

Q. I see, but a month or more? A. Yes, sir.

Q. What kind of stores represent the best outlet? A. Grocery stores.

Q. You mean by that super markets and grocery stores? A. Yes.

Q. Do you have any idea how many large super markets there are in the country? A. No, I don't. I have seen the figures but I don't remember.

Q. Over 10,000? A. Oh, yes, I would say so.

* * *

---

[402] ROBERT WISE,

recalled as a witness on behalf of the plaintiff, testified as follows:

Direct Examination by Mr. Conrad.

Q. You are the same Mr. Wise who testified earlier in these proceedings? A. Yes, I am.

Q. Mr. Wise, I have the impression from the defendant's pretrial brief and also the opening statement and some of the evidence we have here that the defendant believes that Calmar is taking advantage of it by copying its overcap. You have already testified that the SS-40 was not developed by copying from the defendant and need not say anything more about that, but what other comment do you have, if any, on this charge of copying that has been made by the defendant with respect to these products? A. Well, I realize that Cook Chemical seems aggrieved, but Calmar also feels that they have been victimized somewhat by the events that have taken place, which has previously [403] been placed in testimony, but the first Bakan 1 sprayer was a copy of the Calmar sprayer down to the critical dimensions, but beyond that we introduced

our SS-40 sprayer commercially in January of 1959; I believe it was December of '59, if I remember the testimony correctly, that Bakan introduced their so-called Model 2 or modified Model 2 sprayer with overcap and they copied some of the Calmar features at that time, in our opinion. I wonder if I might have the modified 2 sprayer and SS-40 sprayer? I have the Model 2 of—

Q. I now hand you Plaintiff's Exhibits P, Q and S, which show the Bakan 2 and Bakan 2 modified and also Bakan 3. You also have before you this matter that we have been referring to as the model of the SS-40. Is that sufficient for your purposes? A. Yes. The first overcap on the original Model 2 Bakan sprayer was this cap (indicating), and it was made of regular polyethylene.

Q. That is which exhibit number that you just held up? A. This is Defendant's Exhibit No. 30. They subsequently changed that, according to this testimony, to a modified Model 2 overcap which has no exhibit number, but I am confident that this represents the sample of it, in certain respects this copying of our SS-40 overcap. Mr. Scoggin may have been misinformed. He said that they [404] wanted to use linear polyethylene such as we had done in our SS-40 overcap instead of regular polyethylene.

Q. That was brought out in the Bakan 2. A. He was under the impression that it was not available commercially at the time they modified the Model 2. I believe it can be substantiated that linear polyethylene was available in 1955, commercially. Beyond that the original Model 2 overcap as exemplified in this board did not have hanging from the inside a cylindrical seal-in ring which the SS-40 as shown on that board did have. When they modified the Model 2 they placed inside hanging downwardly a sealing ring which, in the opinion of our people, tended to move the location of this seal closer to that of the SS-40 seal. Furthermore, once again the size was appropriated in that this cap can be placed on the threads of the SS-40 sprayer and this can be accommodated, which the first one could not do. This sprayer here (indicating), the original Bakan Model 2 overcap sprayer, the collar had two separate threads inside the overcap with two leads for the threads to start, but on the SS-40, we had one

continuous thread around the circumference of the collar which our engineers described as a buttress thread. This was copied in the Model 2 sprayer, the modified Model 2 sprayer.

Q. Of Bakan? [405] A. Yes, sir. They went through several changes. We noticed they kept changing the depth and height of the cap. I happen to see a picture here which is Defendant's Exhibit No. 82, and I believe that this represents the change on their collar configuration and the change on the sealing ring and I think there was what we called the short ring. They made it longer there, somewhat approximating the length of our sealing ring now. That all happened in relation to No. 2 and it occurred in 1959.

We must remember that the SS-40 was introduced in January of 1959. We have never changed the product in over three years. Along in 1960, Bakan once again made a change in bringing out their Model 3 with the inner seal in which the overcap was used to place in position a series of inner seals to contain liquids inside of the container and once again we felt that this had tended to copy us. Now, frankly, we believe that all of these changes have been beneficial to the business of the Cook Chemical Company because it is our belief that their commercial success is somewhat related to the changes that they kept making in the sprayer with overcaps. Following our lead and as they made these changes, they enjoyed greater success in the market and Bakan being a division of Cook Chemical, even Cook has recognized the advantages of the Model 3 because, to the [406] best of my knowledge, all of the Real-Kill insecticide on the market today has the Model 3 sprayer on, even the bottle which Mr. Austin testified about the other day also has the Model 3 sprayer. We believe it would be of great advantage and we believe Cook believes it to be of great advantage.

[407] Q. Now, this is their device with the inner seal like your SS-40 had some long time before? A. That's right.

Q. Now, in connection with the advertising of the Bakan products have you noticed anything significant with respect to whether or not the Bakan 3, which you

say closely approximates your SS-40, is a better leakproof sprayer than say the Bakan 2 was, which consisted of the —which comprised a seal only between the collar and the overcap? A. We have noticed some unique changes, in our opinion. Our sales force pick up copies of Bakan literature periodically and send it in to the home office, and when they introduced the original Bakan Model 2 with overcap they sent out some literature, of which this is a Thermofax copy.

Q. May I have that a moment? I would like to mark that as Plaintiff's Exhibit DD.

(Plaintiff's Exhibit DD marked for identification.)

Q. I now return it to you. A. The title of this literature is "Bakan Model 2 Leakproof Sprayer" at the very top. And to us that is the very most significant thing about it. On the other side they have typed in here "Introducing the Bakan [408] Model 2 Leakproof Sprayer," and in the paragraph describing the protective cap they mention the fact that it is a leakproof item. However, after they changed the original model 2 and brought out the so-called modified model 2, they then changed the literature and no longer featured the word "leakproof" in describing the product. In the title of this they say "Model 2 Sprayer with protective cover cap."

Q. Now, may I have that piece of literature you are holding so I may mark it as Plaintiff's Exhibit EE? Thank you.

(Plaintiff's Exhibit EE marked for identification.)

A. Now, in this particular literature, nowhere do they mention the word "leakproof" except in this one paragraph, which was lifted almost verbatim from the small paragraph on this sheet (indicating).

Q. That is DD? A. Yes. That is DD, and this is EE. When the model 3 was introduced they brought out some new literature which said, "Model 3 Triple Seal Leakproof Sprayer. Exclusive triple seal for leakproof performance." On this side, "Model 3 Bakan Sprayer, triple seal, leakproof." So whereas originally they had described in their advertising literature the original Bakan 2 as being leakproof, they have now put the emphasis on [409] protective cover cap and have put on the Model

3 the leakproof emphasis. Now, we feel that this is somewhat important, and we feel that the Bakan Model 2 will tend to fade away, because the salesman going out selling the Model 2, he goes in to a customer and he says, "Here is a sprayer with a cap and it has only one seal, and here is a sprayer that provides more than one seal and gives you greater protection in the Model 3, and I believe any customer would prefer this unit, such as Mr. Austin has, particularly when there is no difference in their published prices that are on these pieces of literature."

Q. Now, Mr. Wise, I— A. Now—

Q. Excuse me. Continue if you have more there. A. There is one step further. I might mention, we have tried to determine when these particular pieces of literature were printed. We found a code number which ends 460 in each case. We assume maybe that was April, 1960. And the next piece of literature that we were able to obtain was this large piece of literature here, which is coded on the back 961, which we assume was September, 1961. And this apparently outlined almost all the products they make except the Bakan 2. It is no longer shown on this literature that is distributed. [410] They were featuring exclusively the Model 3 triple seal leakproof sprayer. They still retained the original Model 1 sprayer.

Q. And as I understand from what you said earlier, the only two products which they apparently still are advertising are the two that they derived, you might say, under your leadership? A. Beg pardon? I'm sorry. I didn't get that, Mr. Conrad.

Mr. Conrad: Will you please read it?

(Question read.)

A. I would say "yes," Mr. Conrad. The only literature that we have seen recently has been this piece (indicating).

Q. Now, may I mark that Plaintiff's Exhibit FF?

(Plaintiff's Exhibit FF marked for identification.)

Q. And I am now marking as GG the single page, printed on both sides, and what is apparently the front page bears the title "Bakan Plastic Sprayers and Dispensers Model 3 Triple Seal Leakproof Sprayer."

(Plaintiff's Exhibit GG marked for identification.)

Q. Mr. Wise, I got the impression from testimony which Mr. Martin gave during the defendant's case that when the Bakan sprayer with the overcap was introduced for [411] the year 1955 that it virtually, or at least—it virtually swept from the market the standard sprayer which was attached to the bottle by a paper yoke. What comment do you have on that matter? A. Mr. Conrad, before answering the question, did you say '55?

Q. '58. A. In 1958 Bakan introduced—or at least that was the first full year of their production—their original Bakan 2 sprayer with the overcap, and I realize that they obviously feel very strongly about it. However, in looking back on the history of the last three years, since we have been in production, or the last four years, we, too, have sold millions and millions of shipper sprayers described as SS-40, and they have sold millions of their sprayers with overcaps, but the fact remains that in the last three years we have sold many more millions of the old-fashioned, regular type sprayer that has no seals whatsoever and has been described here as hanging on the side of the bottle. In our case we have sold more of those in the past three years than we have of the SS-40, and we consider our SS-40 sales to have been very satisfactory. There are many customers today who still hang the sprayer on the side of a bottle or put it in a carton, not only in the case of sprayers [412] but in dispensers, which is part of our industry.

Q. Did you just recently make some effort to, you might say, get a representative collection of the products which are being marketed today with a sprayer hung on the side? A. Well, I won't say that the effort we made was representative. We—I think I brought one package with me, and we picked up another one here locally Saturday, and on Monday afternoon we asked our sales force, three people, to pick up some packages and send them in, and they have been sent in.

Q. Are these the packages which are in this box over here to my right? A. Yes.

* * *

[413] Q. (By Mr. Conrad) Now, I have set out just a few of these we have been talking about in the box here,

Mr. Wise. Will you tell us what your purpose was in collecting these? [414] A. Well, the purpose in showing the—I don't believe you got them all, did you, Mr. Conrad?

Q. That is correct. A. The purpose in showing these is to illustrate that the marketing of products with sprayers is such today that the use of sprayers with overcap has not swept out of the market all of the old-fashioned, non-sealing sprayers that have been hung on the side or placed in cartons. We certainly are selling many more today than we are of our shipper-type sprayers.

The Court: Is there any particular reason for that? Is it the price element, or what do you attribute it to?

The Witness: Well, sir, part of it may be price. The product is a little bit less expensive, but that isn't the only answer in this case. I believe Mr. Scoggin testified that the extra expense involved in handling these regular type sprayers was such that he finally was able to bring out his sprayer with an overcap and put it on the bottle at about the same price. Different people prefer to market different products in different ways. We have found that many advertising and promotion men have completely different feelings about how a package should look or what should be incorporated in the package.

[415] Mr. Conrad: Your Honor, I will have these fifteen items marked as Plaintiff's Exhibits HH-1 through HH-15.

The Court: Very well.

(Plaintiff's Exhibits HH-1 through HH-15, both inclusive, marked for identification.)

A. Is it all right to mention that there is a Bakan sprayer there hanging on the side of one of these packages?

Q. Certainly, if that is the fact. Which one is it? A. It is in a little carton attached to the clear bottle of starch, which is right in front of you, in the red carton, and the one next to it is a bottle of window cleaner, which is also a Bakan sprayer.

Q. Is this the first Bakan product you mentioned? A. No, that is a modified model 2 sprayer without an overcap. If you will look at the collar—

Q. It is a Bakan sprayer that is on there? A. It is a Bakan sprayer.

Q. I am now holding up the product which is called Wind-O-Kleen and I will mark that HH-1. Is there another one there? A. I believe the one next to it, to the right of it—no, there—I believe that is also a Bakan sprayer.

Q. This Sta Nu Magic? A. I believe that is correct.

[416] Q. I will mark that as HH-2. By the way, did the Court ask you a question a little earlier about price? How does the price of your SS-40 compare with the price of your S-25-LP? A. The price will vary from—don't hold me to this exactly—but I would say it is in the neighborhood of 15 to 20 per cent higher in price.

Q. Which is higher in price? A. The SS-40 inner seal sprayer with overcap is higher than the regular type sprayer by 15 to 20 per cent.

Q. Yes, that's the regular type sprayer, but how does the price of the SS-40 compare with the price of the S-25-LP? A. Well, the S-25-LP sprayer, which was shown here in Defendant's Exhibit Number 26, is in turn about approximately 10 to 15 per cent higher than the SS-40 with overcap.

Q. I see. A. But you must remember, this sprayer had considerably more parts to it.

Q. By "this" you mean the S-25-LP? A. Yes.

* * *

[417] The Court: That could well account for the difference—to bargain hunters, those who want to get the same quality for less money, will take the same thing for less price. If it is hanging on the side, it doesn't cost as much.

The Witness: Yes, I think you're quite right, your Honor, in relation to the customers that we have. We sell to industry. Calmar does not sell to the consumer.

The Court: Well, I am speaking of the housewife who may go in and be thrift minded or budget minded, she will go in and look for a difference of five cents or so.

The Witness: If I may be permitted, I will tell you an interesting story in that regard. It has been surprising

to me that there has been so much objection and testimony stressed here about the fact that a sprayer hangs on the side of a bottle and the housewife doesn't want to buy it, because she gets the sprayer free, but actually our largest customer, which is our parent company, who make Windex, they sell Windex sprayers in this manner. They take a regular sprayer and put it in a carton, and that carton is sold on the shelf of the super market for 15 cents. So here's a case where the housewife actually goes in the store and [418] purchases a regular sprayer and pays money for it. With the sprayers that are all attached to the bottle, they are all part of the integral package, and the ones that are hung on the side of the bottle, they are all free. And if you will notice most of these collars, they all say "free sprayer" or "free sprayer enclosed."

The Court: Is there a considerable amount of this product, these bug killers and insecticide killers, anything with which these sprayers are used, does it come in containers without sprayers?

The Witness: Yes, there are sales without sprayers. I'm not familiar with the volume. I believe that the volume with sprayers is considerably higher than that without sprayers. But I have had the feeling that perhaps the use of insecticides with sprayers may have been overstressed somewhat. On the S-25-LP, shown here in Defendant's Exhibit Number 26, we sold several million of these, but only about half of them went for use with insecticides. I don't have the breakdown on the SS-40, but I think about half of them would have been for insecticides, certainly considerably less than that this year.

Q. (By Mr. Conrad) You have made reference to your sprayer, the S-25-LP. [419] A. Correct.

Q. Does this product which I am holding in my hand, which I have taken from among those in Plaintiff's Exhibit HH, represent a current use of your S-25-LP? A. Yes, it does.

Q. I will mark that one HH-3. A. That product is hair spray. It has been on the market for several years. The customer likes the appearance of that package, and in that case is willing to pay more money for the S-25-LP than he is for the SS-40, and he is very happy with that

product, particularly after we corrected all of our difficulties in manufacturing we had a few years back.

* * *

Cross-Examination by Mr. Schmidt.

Q. Mr. Wise, let's approach this matter in reverse order and talk first about this display of Plaintiff's Exhibit HH-1 to 15. Over how long a period of time did you make this collection? A. I can pick out the ones that we obtained—the one with the S-25-LP I received last week. Would you care to remove that one. May I come down and examine them?

Q. Yes, if you will, please. A. I can't say for this particular package (indicating). We have another one in our hotel suite that is identical to [420] this that was purchased here on Saturday.

Q. Speaking of the starch package? A. Yes, speaking of the Dumas Milner starch package. And I believe that all the rest of these were obtained by our sales force when we asked them to do so last Monday at noon, and they have all been sent in since that time.

Q. Do you know whether or not your sales force obtained these from the shelves on the open market since last Monday? A. So far as I know, I have not examined them. There are some receipts attached to some of these packages which should show a purchase date.

Q. For the most part, you do not know whether or not this collection has come from your laboratory and has been a constant collection over a number of years? A. No, it has not.

Q. You are certain of that? A. If you would like to go to Cincinnati, I have quite a collection that is untouched.

Q. Do you have any way of knowing how long each of these products had been on the shelf before you picked them up? A. I have no way of knowing.

Q. Now, among all of these products, how many relate to household insecticide? A. How many? Well, four, as I see it.

Q. Four out of 15 have to do with household insecticide. Now, [421] how many of those four have the sprayer hanging on the side? A. There would be one, two, three—it's hanging on the side in the case of three, and it is in the carton in the case of one.

Q. Now, do you have any way of knowing what per cent of the manufacturers of household insecticides that represents? A. No, I don't. I have no way of knowing.

Q. Do you have any way of knowing what per cent of sales those three products with the sprayers hanging on the side represent? A. No, I haven't.

Q. Now, you have testified, I believe, that in your opinion Cook Chemical Company has, for one thing, copied your threads in their Bakan 2, is that correct? A. I don't remember the exact wording, but it seems to me they copied it or at least copied the idea. The actual description of a so-called buttress thread came from our chief engineer.

Q. Is there anything in the threads as such that you consider to be a proprietary item? A. I don't feel qualified to answer it. I will if you want me to. I don't know.

Q. Do you know whether or not a new and different type of [422] thread was adopted by, let us say, Mr. Corsette in your SS-40? A. I don't know.

Q. So you do not know whether or not the thread was copied from the SS-40 or copied from something that might have well been in public domain and well known? A. I don't know. I do know that this, the Bakan 2 overcap, will screw down over the thread on the SS-40 collar.

Q. But are threads, as such, so far as you know, new? A. I don't believe they are particularly new. I think that buttress threads have been around for a good many years, but the particular configuration or angle of it might be important. I don't know.

Q. Now, you spoke of the change that was made by Cook in the Bakan 2 in so far as the cap, the collar seal is concerned? A. Yes.

Q. Is there anything, so far as you know, in the SS-40 and relating to the particular way in which it seals that is a proprietary item of Calmar? Do you know of any patent protection, for example, that has been obtained by

Calmar on that type of sealing? A. I can't say, Mr. Schmidt, because I am not familiar with the patent on the—the details of the patent on the SS-40.

[423] Q. So from an alleged copying standpoint you do not know whether or not Bakan adopted anything of Calmar, in so far as the cap-to-collar seal is concerned, that is considered to be your proprietary item? A. Technically speaking, I do not know.

[424] Q. Have you had any way of knowing from your own knowledge as to what was in the mind of Cook Chemical when they came out with the Bakan 2, as to whether or not they had in mind copying Calmar in any way? A. I don't believe I am qualified to testify to Cook, as to what they had in mind.

Q. You can't? A. I recall Baxter Scoggin testifying as to the development of the Model 2 and the triple seal went along almost concurrently because of pressure from the sales department.

Q. You do not recall Mr. Scoggin ever indicated that he was intending to or did in any manner copy Calmar, do you? A. I don't recall that Baxter said that, no.

Q. In any event, you have indicated, have you not, that in developing the SS-40, you had the Bakan 2 before you and knew about it? A. Correct.

Q. Not that you copied it. I think you said, did you not, yesterday that as far as simulation of the appearance is concerned perhaps you had that in mind? A. I don't think that is a good description and, Mr. Schmidt, we talked about similar appearance out in California, and in my deposition I believe I gave a little description of similar appearance in which I said that many people liked the idea of the appearance of compact automobiles [425] but that the Falcon and the Corvair were two different types, each of entirely different description. I think that my bride was one of those who liked the appearance of this. I didn't think there was any significance to appearance in this.

Q. I have but one more question. Are you in this line of testimony where you are charging Bakan with having copied Calmar, are you saying that if there is such copying, and if that is true, that that justifies anything Calmar

may have done insofar as duplication or simulation as Bakan is concerned? A. The question confuses me a little bit. I won't admit that Calmar had duplicated the Bakan development. I believe in our deposition in California we stated that we gave very specific instructions to our engineers not to copy the Bakan unit. We wanted something better. We only proceeded in a commercial scale upon the advice of our patent counsel.

Q. I believe I heard you testify something to the effect of an integral package with the sprayer hanging on the side. Do you consider that to be an integral package? A. That was an unfortunate expression. I guess I had been picking it up listening to this trial as it had developed.

Q. You do not consider the sprayer hanging on the side of the bottle to be an integrated assembly in the sense of the [426] SS-40, do you? A. Oh, you might call it integrated assembly but if I went out to sell it, I wouldn't say, "Let's make this package integrated".

Q. You are speaking of which package? A. A container and a sprayer.

Q. Hanging on the side of the bottle, you would not call that integrated either, would you? A. I think I would use some other description.

Q. You have testified with respect to the large number of sales that are still being made concerning sprayers having your overcap? A. Yes.

Q. Are those sales primarily in connection with the container, that is, hanging on the side of the container? A. I couldn't say that they are primarily. These sales go to almost hundreds and hundreds and hundreds of customers.

Q. As a matter of fact— A. (Interrupting) And I am not familiar with them.

Q. For the most part are they not sold separately from the container, the sprayer may be purchased separately? A. It all depends on your interpretation of the most. Of the sales of original sprayers, Mr. Schmidt, that we sell others, the sales of triple sprayers, somewhere [427] between 40 and 45 percent are sold, to the best of my knowledge, in what you might say loose condition; in other words, they are not in a separate container. The balance

are sold primarily to the Drackett Company, which is our parent company who do put them in a container and do sell them, but that 40 or 50 percent represents a big quantity of sprayers.

Q. Do you handle the sprayer on the side of Windex? A. No.

Q. Do you sell it with the package? A. Normally the sprayer is sold separately. I do think—I can't state positively—I think periodically they have a promotion where they are sold together.

Q. Is that the purchase by the Drackett Company for sales in connection with Windex, does that not represent a large percentage of your sale of conventional sprayers? A. Well, I believe I explained that 40 to 45 percent were other than this.

Q. Then 55 percent goes to Drackett? A. Fifty to 55 percent, I would say. I don't have the exact figures.

The Court: Gentlemen, I wonder if we can't agree that both the accused and the patented were accepted for commercial use?

Mr. Schmidt: We can't help but so agree.

[428] The Court: There is no question of that, is there? Isn't it a fact we can agree that both the patented device and accused device were ready and had an extensive commercial acceptance?

Mr. Conrad: I think—

The Court: All right, if you cannot admit it, there is no use to argue about it.

Mr. Conrad: We are not considering as being in testimony—

The Court: All right. When we get into the millions and fifteen hundred millions, I think you are doing pretty well, gentlemen, whatever the figures on the other side may be. Pardon me?

* * *

[431] JOSEPH McCORMACK,

being produced, sworn and examined as a witness on behalf of the plaintiff, testified as follows:

Direct Examination by Mr. Headley.

Q. Will you state your name to the Court, please? A. Joseph McCormack.

Q. Mr. McCormack, where do you live? A. Deer Park, New York.

[432] Q. For whom do you work? A. Colgate-Palmolive.

Q. What is your position or your job with Colgate? A. Assistant to the budget manager of the Household Products Division.

Q. How long have you held that particular job? A. One month.

Q. Prior to that what was your employment? A. Assistant to the general accounting manager of Household Products Division.

Q. Assistant to the general accounting manager of the Household Production Division? A. Yes, sir.

Q. Of Colgate? A. Yes.

Q. How long did you hold that position? A. From 1957, through January 31st.

Q. Would you briefly tell the Court just what that job as assistant to the manager of general accounting of the Household Products Division entailed? A. It entailed the supervision of the preparation of all financial data pertaining to the Household Products Division.

Q. Now, Mr. McCormack, have you at our request obtained from and brought with you Colgate's sales information for the [433] year 1958, with respect to all the bottled insecticides marketed by Colgate in that year? A. Yes, I have.

Q. And would you state to the Court what size bottles Colgate marketed that year? A. Sixteen ounce and 32 ounce.

Q. And under what trade name were those bottles sold? A. Kan-Kil.

Q. Mr. McCormack, would you tell the Court what the relationship of the sprayers were to that bottle, how they were attached? A. It was attached to a collar card to the bottle.

Q. I will show you, Mr. McCormack, Defendant's Exhibit No. 18, and ask you if that portrays what you have just described verbally? A. Yes, sir.

Q. With the sprayer attached to the neck of the bottle by means of a collar card? A. Yes.

Q. Was that the only way that Colgate marketed a bottle of insecticide which in any way involved the pump in the year 1958? A. Yes.

Q. Now, Mr. McCormack, with respect to the 16-ounce bottle, which incidentally is the size represented by Defendant's [434] Exhibit No. 18, would you tell us what the total number of bottles marketed in the year of 1958 of that size was? A. 79,796 dozen.

Q. And when you say "dozen", is that the same as cases? A. Yes.

Q. These bottles came 12 bottles to a case? A. Yes.

Q. Now, with respect to the 32-ounce bottle, which was the other size marketed by Colgate in 1958, how many dozen or cases were marketed in that year? A. 32,476 dozen or cases.

Q. Now, with respect to the price that was obtained by Colgate from all of its customers in that year concerning these two sizes of bottled insecticide, would you just tell us what those prices were? A. Well, for the 16-ounce bottle, it is carload, $5.63; 50 cases, $5.68; 10 cases, $5.80; five cases, $5.85.

Q. When you mention that you are referring to in what lot the order may be, if it is a five-case order or less it would be $5.85 a case? A. That is correct.

Q. And you go on up to the price per carload lots? A. Yes.

Q. Now, with respect to the 32-ounce bottles, tell us the price, the 1958 price, Colgate's price. [435] A. For carload, $9.70; 50 case, $9.80; 10 case, $10.00; five cases, $10.05.

Q. Now, Mr. McCormack, this information that you have given us, was that sales information obtained by you from the Colgate records where they are regularly and ordinarily kept in the regular course of business by Colgate within the department in which you work? A. Yes.

Mr. Headley: Will you mark this as Plaintiff's Exhibit II?

(Plaintiff's Exhibit II marked for identification.)

Q. Mr. McCormack, I will hand you what has been marked Plaintiff's Exhibit II, and ask you if that does not summarize the information that you have just testified about concerning the number of cases of the different size insecticide bottles that Colgate marketed in the year 1958, and the prices Colgate received for those bottles? A. Yes, it does.

Mr. Headley: At this time the plaintiff offers in evidence Exhibit II.

Mr. Schmidt: No objection.

The Court: Admitted without objection.

(Plaintiff's Exhibit II received in evidence.)

[436] Q. Now, Mr. McCormack, it has been in evidence here earlier in this case that in 1958 Colgate flooded the market with millions of dollars worth of bottled insecticide, and I ask you whether you have taken these prices for 1958 and the total quantity of bottled insecticide which was shipped by Colgate, and using the prices, the maximum price, which would be the price for five or less, disregarding the lesser price concerning car load lots, but using that maximum price, have you figured what the total dollar value— A. Yes.

Q. —to Colgate of such insecticide marketed in 1958? A. Yes, I have.

Q. And would you tell the Court briefly, with respect to the 16-ounce bottle what your figure is? A. For the 16-ounce bottle, $466,806.60.

Q. And would you state into the record how you computed that figure? A. That was by multiplying the number of cases of 16-ounce bottles, 79,796 times the five-case price of $5.85.

Q. And you reached this figure of $466,806.60? A. Yes.

Q. And now with respect to the 32-ounce bottle, tell us how you figured it and what the end total value was? A. Well, the 32,476 dozen multiplied by the five-case price of [437] $10.05 for a total of $326,383.80.

Q. Now, have you added those two figures together, Mr. McCormack? A. Yes, I have.

Q. And what is the total amount that you reached, dollar value, using this maximum case price that Colgate marketed in this bottled insecticide in the year 1958? A. $793,190.40.

Q. I will hand you Plaintiff's Exhibit II and ask if you would just write on that here, using my pen and in ink, these figures that you have just related with respect to the total dollar value concerning the 16-ounce bottle, the total dollar value concerning the 32-ounce bottle, and then the total of the two figures.

And have you now done that pursuant to my request, Mr. McCormack? A. Yes, I have.

Mr. Headley: All right. No more questions.

Cross-Examination by Mr. Schmidt.

Q. Mr. McCormack, do I understand that all of the figures and all of the calculations concerning which you have thus far testified relate to 1958 only? A. Yes.

Q. And relate solely to the 16- and 32-ounce bottles with the [438] sprayer hanging on the side? A. Yes.

Q. Now, do you have comparable figures as to production and sales for 1957 of insecticide products? A. No, I don't.

Q. Do you have comparable figures for 1959? A. No.

Q. Do you know personally when Colgate changed over from hanging the sprayer on the side of the bottle to a sprayer integrated with the bottle? A. Yes, in 1959.

Q. And you have no figures as to your sales in 1959 concerning the changed bottle, is that correct? A. No, I don't.

Q. How were insecticides commercialized and placed on the market in 1957? A. They were sold in cans.

Q. The aerosol type? A. We only had canned insecticides.

Q. But was it solely aerosol or was it a liquid insecticide, or do you know? A. I don't know.

Q. Do you know when Colgate first started hanging the sprayer on the side of the bottle? A. In 1958.

[439] Q. So in 1957 Colgate was not, so far as you know, selling liquid insecticide? A. I don't know.

Q. You don't know. Do you have any idea at all, generally speaking, how your sales compared '57, '58, '59, '60 and so on? A. No, I don't.

Q. You have no such data? A. Not with me, no.

Mr. Schmidt: Thank you.

Re-Direct Examination by Mr. Headley.

Q. Mr. McCormack, you were asked only to check and bring with you sales figures for the year 1958? A. Yes, for bottled insecticides.

Q. And to your knowledge, was 1958 the first year Colgate came out with bottled insecticides and with a sprayer attached by means of a cardboard collar? A. Yes.

* * *

Mr. Conrad: Your Honor, we took some testimony during which reference was made to this enlargement of Figure 8 in the Livingstone '480 patent, which is also [440] colored to illustrate the outline of certain parts. I would like to have that marked in evidence as Plaintiff's JJ.

The Court: It will be received in evidence.

(Plaintiff's Exhibit JJ marked for identification.)

Mr. Conrad: Your Honor, we also have an enlargement of one of the drawings of the Mellon patent, which is in evidence and which will be referred to in the course of our expert's testimony. I would like to have that marked in evidence as Plaintiff's KK.

The Court: Admitted in evidence.

(Plaintiff's Exhibit KK marked for identification.)

Mr. Conrad: Yesterday, we put in evidence a model of a sprayer device with an overcap which was stipulated

to have been in use in this country, I think the date was since 1940.

Mr. Schmidt: I beg your pardon, you say since 1940?

Mr. Conrad: No—did I say since 1940?

Mr. Schmidt: I was wondering whether you said that.

Mr. Conrad: What I am about to say will indicate I didn't mean it if I did say it.

Mr. Schmidt: Thank you.

Mr. Conrad: Your Honor, we have here a [441] deposition of a Mr. Richard High taken in Boston in which this was identified, that is this Exhibit Z, and during the course of which Mr. High explained that the production of this was discontinued sometime ago because of the high cost of making it. I would like to offer in evidence as Plaintiff's LL the deposition of Mr. High.

Mr. Schmidt: No objection.

(Plaintiff's Exhibit LL marked for identification.)

(Plaintiff's Exhibits JJ, KK, and LL received in evidence.)

[442] Mr. Conrad: Your Honor, I found on looking over the record yesterday that we had overlooked offering in evidence three of the patents which are mentioned in the file history of the Scoggin Patent in suit. I would like now to put in evidence as Plaintiff's Exhibit MM, a copy of the Slade Patent No. 2,844,290, dated July 22, 1958.

Mr. Schmidt: No objection.

Mr. Conrad: As Plaintiff's NN, a copy of Nilson, United States Patent 2,118,222, dated May 24, 1938.

Mr. Schmidt: No objection.

The Court: Admitted in evidence.

Mr. Conrad: And as Plaintiff's OO—

The Court: Going back to the patent to Slade, what is the name of it? I just don't find it here.

Mr. Conrad: The number is 2,844,290.

The Court: I have it.

Mr. Conrad: That is MM, your Honor. As Plaintiff's Exhibit OO, a copy of the Darley Patent, United States Patent 1,447,712.

Mr. Schmidt: No objection.

The Court: Admitted without objection.

Mr. Conrad: This is March 6, 1923.

(Plaintiff's Exhibits MM, NN and OO marked for identification and received in evidence.)

---

[443] DOUGLAS F. CORSETTE,

being produced, sworn and examined as a witness on behalf of the plaintiff, testified as follows:

Direct Examination by Mr. Conrad.

Q. Will you please state your name? A. Douglas F. Corsette.

Q. Where are you employed, Mr. Corsette? A. I am employed by Calmar, Inc.

Q. That is the plaintiff in this action? A. The plaintiff in this action.

Q. How long have you been with Calmar? A. Over four years.

Q. What is the nature of your work with Calmar? A. I am vice-president in charge of engineering and development.

Q. Have you had any secondary education? A. I have a Bachelor and Master in Engineering from Purdue University.

Q. What experience have you had with the design and manufacturing assembly of sprayers such as are involved in this case? A. Including the S-25, our regular sprayer, I was employed prior to my association with Calmar with a company which was constructing an automatic assembly machine for the [444] purpose of assembling these devices.

Q. What experience have you had with sprayers after you came with Calmar? A. I was continuing development of this assembly machine and was working. getting familiar with the operation of the plant itself, and its requirements with respect to engineering, machinery, and the development of new products.

Q. Now, did you participate in the design of the accused SS-40 sprayer which has been spoken about here? A. Yes.

Q. Now, I direct your attention to Plaintiff's Exhibit G. Will you explain what that is and tell if you know how it was made? A. Plaintiff's Exhibit G is a working model of the showing depicted in the Scoggin Patent. It was made by a company called Scale Design, Associates, which constructed this model from a scale drawing. This scale drawing was created by taking a photograph of the actual patent showing and from that negative creating a reproducible vellum master, from which the prints were run, contact prints were run in order to provide Scale Design, Associates, with the precise showing of the Scoggin Patent.

Q. Have you examined the model? [445] A. Yes.

Q. Are you satisfied it is in accord with the design that had been laid by this photograph? A. I believe it is, yes, a good representation.

Q. Now, I direct your attention to this model that bears the legend, "Calmar SS-40", and ask you if that fairly represents the structure of the sprayers that Calmar makes and sells commercially under the designation of SS-40? A. I believe it does.

Q. Can you explain to us how that model was constructed, if you know? A. That model was constructed by the same concern, also from a drawing which was printed from a vellum. The vellum was created by our draftsmen.

Q. It is your opinion that the vellum which was used was an accurate representation of the construction of the SS-40 which was made and sold by your company? A. As usually can be expected it does represent the SS-40 as commercially sold.

Q. Now, I would like to have that model which has just been identified by the witness marked as the Plaintiff's PP.

The Court: Marked and admitted.

(Plaintiff's Exhibit PP marked for identification and received in evidence.)

[446] Q. I now direct your attention to the drawing I am holding up. Will you tell us what that is? A. That is a drawing which I believe is the same construction as

the model, shows the same construction as the model, referring to our SS-40 sprayer, and there are some blurred areas in the duplication process, some of the lines have run together.

Q. You feel this fairly represents the construction of your commercial sprayer? A. Yes.

Mr. Conrad: Your Honor, I would like to have that drawing just identified marked as Plaintiff's QQ in evidence.

(Plaintiff's Exhibit QQ marked for identification.)

Q. Mr. Corsette, I would now like to have you explain to the Court the construction and operation of the accused SS-40 device and in making this explanation, feel free to use the exhibits you see about you, if you think they can best be used to make this explanation. A. I think with respect to the operation of the pump, that has been adequately described, especially with respect to its ability to reciprocate and dispense liquid in the form of a spray. As I refer to some of the significant features as shown on the working model I would like to mark them on this Exhibit QQ. Basically the significant [447] features of the SS-40 consist of the manner in which the pump itself is prevented from exuding liquid through or around the pump itself. These seals are made by contact on the element of the piston which we call the probe, which descends from the center of the piston down through the center area of the coil spring, such that it impinges on the top of the lower valve ball when it is depressed to the bottom of the cylinder. In this position pressure of the plunger on the ball forms a double seal by the ball in contact with the ball seat itself and the other by contact of the ball with the normal discharge channel of the sprayer. This seal is located with respect to the other elements of the plunger, barrel and retainer such that when the plunger is depressed, then the overcap, first contact is made between the probe and the lower ball. I shall mark that on this drawing as "1".

The Court: May I ask you, when you depressed that it looked like the plunger was of some plastic material?

A. This plunger is of a polyethylene plastic which is called linear polyethylene.

The Court: Then it conforms to the contour of the ball as it goes down? A. Yes, it is deformed over the ball such that force applied to the top of the plunger is exercised in flaring the probe [448] over the top of the ball. In this manner, the inside corner of the probe then is contacted in spherical surface to the ball and it will flare out.

The next element which comes in contact as the plunger is depressed is the tapered skirt of the head which I shall designate "2" on Exhibit QQ. This taper is dimensioned such that it comes in contact with the retainer just before it strikes the bottom seat of the collar which I shall mark "3" in Exhibit QQ. The height of the head is dimensioned such that the distance from Point 3 in QQ is high enough so that it will not permit the overcap seal which I shall designate generically as element "4", for the reason that if Point 3 is shorter or—let me correct that—if Point 3 does not come in contact, the seal will not be formed at that point. Therefore, the overcap must not of itself prevent this seal from being engaged. Thus the height of the cap or the top of the head, which I shall point an arrow in here and call it "5" is a reference or datum with respect to the seals, as is the top of the lower valve ball designated in the area "1". Thus it is seen that if the dimension of the overcap in the area of the seal, taking any point thereof with respect to the top of the head would permit a restriction in the downward movement of the overcap, then it would be impossible to engage the [449] internal seals designated at "1", "2" and "3". It can be shown that this engagement between the head, and I am going to give the head a number, "6", and the retainer, "7", is a rigid one. When you bring these two members together and point 3 is engaged, then that is as far as it will go. Therefore, this seal in the area 4 has to be insensitive to precise vertical position because of certain variations in the amount of shrinkage, if the overcap shrinks excessively then it is too short and, therefore, if we have had a seal such as has been referred to in the Scoggin Patent, we would not be able to be sure that these internal seals would be engaged because one of them would undoubtedly be out of engagement at the time that the overcap seal was engaged.

The overcap and the head are dimensioned such that the external surfaces which I am going to mark on the head, this circle "8" is the boss, extending on the front of the spray head surrounding the orifice disk which creates the spray, and it is annular in nature when viewed from the front, and I am going to draw another number "8" also to the lower surface, but it also includes the curved connecting line between these two designations as shown in the back half, since the head in this QQ Exhibit is assumed to have been cut on the center line.

[450] An additional point on the head which I shall designate as "9" is an element referred to as a boss, which also is shown in contact with the overcap. These elements 8 and 9 are dimensioned so that they fall on the surface of a cone, which would be represented by the envelope of the overcap. Thus, in this manner when the cap is dropped down to the head in production, the head necessarily orients the cap, coaxially with the plunger. In this manner it is assured that with the guide provided for the plunger by the retainer at point 10, and its tight fit in the lower skirt 11, plus the piston fit at point 12, it can be seen that the plunger will reciprocate on its axis and thus hold the overcap likewise on its axis for proper engagement between the cylindrical sleeve flange of the overcap seal which may be described as a ring attached within the overcap, and molded integrally therewith. This cylindrical sleeve is dimensioned to engage with a corresponding annular groove in the collar which has been referred to as a retainer previously, such that parallel faces may be brought into engagement with respect to forming a seal between the seal ring of the overcap and the annular groove of the retainer by what might be termed a working fit between parallel cylindrical surfaces of the two mating members.

[451] Q. Mr. Corsette, I wonder if you could now illustrate the operation of the seals which you have described with reference to QQ by using this movable model PP. A. When the pump is manufactured it is manufactured, first, without the overcap in order to permit the solvent bond between the retainer and the barrel extension to cure to the extent that it will be a rigid engagement. When the overcap is applied it is brought down by

an overcap torquing machine which depresses the plunger into engagement, first, with the ball and then with the lateral faces of the conical skirt of the head into the conical well of the retainer, and as the torque is applied to the overcap the force is continued to be applied auxiliarly by the capping machine such that the threads then will hold the plunger in this position with the head firmly bottomed on the flat of the retainer marked 3 in Exhibit QQ.

Q. Now, when this seal is made at this point—that is, what you have marked as point 3, I believe, in QQ—is there any further downward movement of the head after that time? A. No, there is not.

Q. Now, at that time what is it, if anything, that is preventing the cap from going any further down? A. It is the rigid engagement between the retainer and the [452] head itself.

Q. Well, now, suppose that instead of that that these seals between the overcap and the collar were such that they would engage and prevent any further downward movement of the cap. What would be the consequence of that? A. It would leave, as you have shown here, a gap between the lateral face of the cone and at the bottom of the head, which would mean that the plunger had not been depressed to its full, lowermost position.

Q. What would be the consequence of that? A. If the plunger is not fully depressed then the internal seal has not been made in the area marked 2 and 3.

Q. Well, is there anything about the design of this overcap-to-retainer seal that assures you that you will get this head-to-collar seal established? A. Dimensions of these elements are such that there is a gap at the rigid members of the overcap—pardon me, at the rigid member of the retainer with respect to any facing surface on the overcap.

Q. Now, perhaps we can clarify this some by comparing the design of the seal that is described in the Scoggin patent between the overcap and the retainer with the design of the seal that is involved in the SS-40, particularly with reference to this matter of the seal being the thing which prevents the contact between the bottom of the

overcap and [453] the top of the container cap. A. I don't know what the procedures are in assembling the commercial embodiment of this device designated—is it Exhibit G?

Q. G. A. Designated Exhibit G, which portrays the elements shown in the Scoggin patent. However, they must in some manner screw the overcap on to the container cap, whether it is first snapped over and then turned tight or whether it is threaded all the way. In any event, the overcap will progress until some surfaces are brought into engagement which will stop the downward movement.

Q. Now, does the stopping of the downward movement by the seals in the Scoggin patent have any consequences with respect to the plunger? A. There is no consequence with respect to the plunger as long as there is still movement of the plunger below that point where the overcap seals are engaged. If there is a point reached where the plunger has reached its bottom position before the engaging surfaces of the seal between the retainer and overcap have been made, then the seal cannot be brought to bear unless the plunger is made short enough so that there is still overtravel of the plunger possible in order to avoid critical dimensioning between the top of the overcap, the shoulder, I believe [454] designated 50 in the patent, of the overcap, and the length of the plunger with respect to the internal elements, including the internal length of the cylinder barrel and the spring.

Q. Are there any seals which are put into effect in the Scoggin device by movement of the plunger? A. There are no seals whatever on the plunger that serve to prevent leakage from the container.

Q. What is the only thing involved in the Scoggin device, then, which stops the downward travel of the overcap? A. The only elements in the Scoggin device which limit the downward travel of the overcap and thus—

Q. Just in general, is it that seal between the overcap and the retainer? A. Yes, it is; it is just the seal.

Q. Now, is that the way the Scoggin device is designed to establish that clearance between the bottom of the cap skirt and the top of the container? A. Yes.

Q. Now, could you have such a design in your device, depicted in PP, of that overcap-to-collar seal? A. No, this would not be—

Q. Why couldn't you have that? A. For the reason that it would prevent engagement of these seals designated 1 and 2 and 3.

[455] The Court: While you are on that subject, I see a ball also in exhibit—what is this one over here? It isn't marked on the front of it and I can't tell.

The Witness: G—Exhibit G.

The Court: G. I see a ball at the lower end of the barrel immediately below the spring. Now, what—

The Witness: This is merely a valve ball, your Honor.

The Court: It is a valve ball. Does that perform any function other than simply operating up and down because of the fluid that is drawn in and goes out?

The Witness: None, sir.

The Court: I don't explain it well, but—

The Witness: I think you did well. That's what it does. It is a check valve.

The Court: There is no contact, as I understand, between the spring immediately above and adjacent to that ball and the ball itself as the plunger is raised or lowered.

The Witness: If there is spring contact against this ball, then the suction available on this device is such that this valve will prevent fluid from [456] being drawn into the barrel, and until, at least until, the plunger is far enough up so that the spring pressure has been relieved from the ball.

The Court: But when the plunger is down and the cap is on and the plunger is down, there is no contact between the spring and that ball in the Scoggin patent, as I understand. Am I correct in that?

The Witness: I know of none.

The Court: All right. It may or may not have any significance. I don't know, but I am just looking at it. Very well.

Q. (By Mr. Conrad) Now, I believe I asked you a little earlier to tell why it wouldn't be possible to use in your device the kind of an overcap-to-collar seal that is shown

in the Scoggin patent, and as I understood your answer, you said that if you employed a seal which stopped the downward movement of your cap that you very well might not get this important primary seal closed. A. That is correct.

Q. So that this primary seal between the head and the retainer was what had to be closed first, and you had to be sure you got that closed? A. Yes.

Q. And in order to be sure you got that closed this design of the overcap-to-collar seal had to be such that it would [457] not interfere with stopping the downward movement of the overcap which was necessary to close this main seal, is that right? A. Yes.

Q. Well, now, will you explain to us the actual details of construction of this overcap-to-collar seal? A. This depending ring is a parallel sided cylindrical member forming an annular ring around the inside of the overcap such that when the combination is made, this ring will enter the groove in the retainer in a relationship such that contact, lateral contact, is made on at least one of the parallel facing surfaces, of which there are several, and this arrangement is what is termed a labyrinth type of seal. I think that zigzag path, looking in the cross section view of QQ, will demonstrate the use of the term "labyrinth". At the outset of this engagement the most probable surface to be contacted is the one which I am designating with a broad line, which I will number 13, and this surface on each member, when in contact with each other, permits a rotational relationship of one cylinder within the other, and if the head is in place this seal ring will be brought down into the groove in a position such that there is a gap at the area which I will designate 14, which refers to a specific zone within the general area previously designated 4. There is also another element [458] on this ring, which I refer to as a feather flange. This feather flange is a depending sleeve member located such that its inner surface is coincident with the inner surface of the principal sealing ring of the overcap, and its dimensions are five thousandths wide by ten thousandths long, so constructed as to be of a fragile nature. This member, in the normal assembly, is held away from the bottom of the annular groove in the area I shall designate 15. In this manner

the normal position of the overcap permits the thrust of the threads which is generated at the point I mark 16 to provide the downward force holding the plunger seal engaged at 2 and 3 and the probe ball seal at 1.

Q. What is the idea behind putting that so-called feather flange down at the bottom of the sealing ring? I mean, why change the cross-section of the sealing ring? Why not use the same cross-section of the sealing ring right down to the bottom instead of reducing it in order to form that feather flange? A. We removed additional material from the bottom of this depending ring as well as to provide one corner of this depending ring which will be able to enter the groove first before the principal flange is brought down into the groove, thus there won't be any corner interferences.

Q. Now, is the size and strength of that so-called feather flange sufficient to stop the downward movement of the [459] overcap if it should make contact with the bottom of the sealing groove? A. No, it is not.

[460] Q. I wonder if you have one of your actual production caps with you which you perhaps could show the Court and point out the corresponding elements in the production cap to those that you have referred to in Plaintiff's Exhibit QQ. Mr. Corsette, I have this sectioned model of the SS-40, you might want to use. A. Here is a section model of the SS-40 which has been cut down through the overcap and the retainer, apparently without any corresponding cut being made on the head.

Q. Now, will you point out to the Judge the important elements involved in making the seals that you have referred to earlier in your description of QQ? Excuse me, I mean point them out on the model. A. This model, since the overcap has been sectioned, it has removed half of the material supporting the thrust against the top of the dome, by the head into the collar, therefore, there is some distortion because of the cut-away, but the depending member of the seal consists of this ring, having parallel cylindrical sides and having this member we refer to as the feather flange at the lower inside corner, and its inside surface is continuous with the inside cylindrical surface of the ring itself. The gap is prevented from clos-

ing at the top outside element of the collar by a support of the overcap from within provided by the rigid head being spaced from the seat [461] within the retainer. The barrel has not been sectioned on that member to disclose the inner members of this combination.

The Court: This exhibit does not show or does it, the action of the barrel? In other words, this SS-40, Exhibit PP, this isn't big enough. I cannot see those things that are. What I am getting at, well, it is designated as you have marked 2 on your exhibit here, QQ, where does that downward element designated as "2" by your broad marker, where does that show up on this particular cut-out exhibit? A. That is this surface around the head, your Honor (indicating).

Q. (By Mr. Conrad) Do we have one there with just the parts, you can point it out more particularly? A. I have what we call a sub assembly.

The Court: In other words, that is just a flange that seats in the corresponding cylinder or whatever you call it, taper?

A. Yes, that is right.

Q. (By Mr. Conrad) Is that one of the old primary seals we have been talking about? A. Yes, it is.

Q. Is that the seal you say might not be established if the downward movement of the overcap was interfered with by earlier engagement of the overcap also? A. Yes. [462] Q. Now, is there any such head on the collar seal involved in the Scoggin device? A. Not in the Scoggin device.

Q. Now, in view of what you have said, Mr. Corsette, I would like to ask you this: In what respects, if any, does the SS-40 overcap, the collar seal designated by you as "4" on Exhibit QQ, act to maintain the lower edge of the overcap out of contacting relationship with the cap of the container when the member is on the retainer, the member being the overcap, in a position so that both the seal at "4" is tightly engaged? A. The seal at "4" cannot serve to maintain the clearance at the bottom of the overcap because if it did, it would prevent the engagement of the internal seal.

Q. Now, I place along to your left Defendant's Exhibits 102, 104, 106 and 108, which are the physical models and the photographs marked Defendant's Exhibits 110, 112, 114 and 116. Have you had an opportunity to examine them? A. Yes, I have.

Q. Now, in what respects, if any, do you find them representative of the overcap with collar seal which was actually used in the SS-40 construction which has been made and sold by Calmar? A. They are not representative of the commercial embodiment of our combination.

[463] Q. Will you explain why you say that? A. The first observation is that the head is missing in all cases; therefore, these models have been made without the internal support on the top of the head, from the head itself, to maintain the seal at points "2" and "3".

Q. I take it from that you mean in the absence of this head, the overcap is able to come down much more easily and perhaps in some different relationship with respect to the retainer than it would have been able to do, if this had been present? A. This is true, in addition to several other factors.

Q. Well, mention the other factors. A. These models, 102, 104, 106 and 108, have been screwed down on the collar member to varying degrees as controlled by spacer washers underneath the skirt of the overcap and caught down in that position, so that first the overcap is being used in a manner with upward thrust against the bottom of the overcap in bottles 102, 104 and 106. In addition to this, there is a quadrant, approximately a quadrant cut away in each case.

Q. Are you now referring to the models 102 to 108? A. Yes, in the models 102 through 108, there is approximately one quadrant cut away from the top to at least halfway down the overcap skirt; therefore, the circumferential continuity of these elements being represented [464] has been interrupted, these elements in their normal configuration constitute a hoop relationship. This configuration behaves in the manner of a hoop such that if force is applied either from the outside or the inside are absorbed in circumferential tension or compression as is a hoop.

When you cut a section out of it, the member is stressed in a manner of bending such that what is left of the hoop then is exercised in bending.

Q. Excuse me? Could you translate that for us with respect to, say some common experience we all have, like cutting a hoop, if you like? A. I have made a couple of examples to illustrate this using some elements that are normally familiar to everyone. I have a polyethylene tumbler which in this case is regular polyethylene as to distinguish it from lineal polyethylene, and it has a continuous annular configuration, and in the area of the upper condition, it is a hoop such as that if you squeeze it from the outside or you stretch it from the inside or apply any pressure on it, it behaves, if you perform the same pressure all the way around, it is either in compression or in tension throughout the periphery of the member, and to illustrate the effect of sectioning, I have an identical tumbler purchased in the same package, constituting the same material, and both of these are the same color and blue. [465] This is approximately a quadrant that has been cut away and by comparison, in one hand or the other compare the resiliency of these two members from the standpoint of their interrupted geometry. I can translate this in terms of relative forces. If you were to question the amount of force being applied in any case we can hold both tumblers by the base, place the cut edge of one tumbler against the solid cylindrical wall of the other, press them together and note the relative displacement. This demonstrates that with exactly the same force applied to each, the relative deflection is distorted in the cut example and it is resisted by the whole.

Q. To what extent has that phenomenon you just described relate with respect to the samples, that is, the models 102 to 108? A. The apparent angularity which is purported to be disclosed by these models and corresponding photographs is induced by some lateral movement of the relative elements, related elements.

Q. Give us a specific example so we will know exactly what you are talking about. A. For instance, in terms of the amount of deflection caused by this cut section compared to the uncut section, referring now to the

photograph, Defendant's Exhibit 110, corresponding to Defendant's model Exhibit 102, this [466] lateral deflection is related in terms of the actual size, the retainer in this scale is two and a half feet in diameter.

Q. You mean if the whole device were shown in the same scale as the part is shown in that exhibit in your hand, this retainer would be two and a half feet in diameter? A. Yes, and the actual physical deflection of the member in this particular picture is approximately one-thousandth.

Q. How big is one-thousandth? A. It is about one-fifth or one-sixth of the thickness of an ordinary sheet of paper.

Q. Now, is it your point that bringing the hoop such as you have talked about might have caused that downwardly extending collar to look as though it were off to one side instead of straight up and down? A. That is part of it, yes.

Q. Is there another part? A. Another part is that the related dimensions to the proper assembly of this overcap are concerned with the relationship of the continuous thread on the retainer as it is normally disposed from the top of the retainer and the number of degrees of engagement when the collar is threaded down. Therefore, in addition to the section deficiency, we have also the fact that the overcap has [467] not been symmetrically assembled because the spacer washer underneath has held the threads in a position such that it will require in the case of model 102 approximately, well, it would have to be approximately 90 degrees of thread engagement to illustrate what happens when the overcap is applied.

Q. I get from what you say there that in the bottles, or at least in that one bottle, if your thread is only engaged more or less in one side so that the cap is pulled down crooked, is that it? A. Yes, sir.

* * *

[468] Q. Mr. Corsette, before we return to the discussion of Defendant's Exhibits 102 through 116, I would like to ask you if you can give us any simple illustration with your hands of the nature, say, of a labyrinth seal as compared, say, to a pressure seal.

The Court: What kind of a seal?

The Witness: Labyrinth.

A. You might compare labyrinth—

The Court: Give us the definition of "labyrinth seal".

The Witness: A labyrinth seal is a type of interengaged parallel surfaces that are not necessarily fixed with respect to one another, which might be demonstrated by telescoping the fingers together endwise parallel.

The Court: I assumed it was, but I wanted it in the record so I would have it there.

Q. (By Mr. Conrad) Now, a pressure seal, so-called. A. And a pressure seal might be illustrated by pressing your two fists together, flat surface against a flat surface, the pressure being exerted perpendicular to the plane of the surfaces.

Q. Now, with respect to the overcap-to-collar seals in the SS-40 and in the Scoggin patent, which are involved in each? [469] A. Would you repeat that again?

(Question read.)

A. The labyrinth type of seal is involved in the case of the SS-40, and the pressure seal in the case of the Scoggin patent.

* * *

[470] Q. Now, have you completed your explanation of why you didn't regard the Defendant's Exhibits 102 through 116 as representative of the commercial structure of the SS-40? A. It appears to me that Exhibit 108, which is a model of a cut-away overcap, does not correspond with Defendant's Exhibit 116, which purports to be a photograph of that, in that at the upper left corner of the outer annular ring of the retainer there is an area of the overcap which does not find its counterpart in the cut-away [471] exhibit in that there is a void in this area in the photograph, which indicates evidence of having been cut, and the relative length of the depending annular ring, when measured with respect to the other views, indicates an out-of-scale length, which tends to confirm this opinion. If I measure on the drawing 110, for instance—excuse me, photograph, Exhibit 110—which purports to be a photograph of the model Defendant's Exhibit 102, not including

the feather flange, the scale of this drawing would indicate a length comparable to the length including this area at the top left corner such that this portion of the photograph which purports to come in contact with the outer annular ring apparently has accrued because of burring the edge of the cut with whatever instrument made the slice.

Q. Now, do I understand from what you said that by inspecting some of these other exhibits and the other photographs that you are able to tell that this space here, to which I am pointing, which appears to be relatively narrow, should be much wider than it is? A. Yes.

Q. And that if it were—will you indicate with your fingers approximately what the proper width of that space would be, as you have determined it? A. On the photograph, the proper width would be approximately [472] in the neighborhood of a quarter-inch on that scale.

Mr. Schmidt: May I ask counsel what photograph you are now referring to?

Mr. Conrad: I was referring to Defendant's Exhibit 116.

Mr. Schmidt: You jumped from 110 to 116, is that correct?

The Witness: Yes.

Mr. Conrad: The question I put to the witness was with respect to 116.

Mr. Schmidt: Yes, just so I understand.

Mr. Conrad: Thank you. I appreciate the correction. And the space to which reference was just made in this question is that between the upper outer edge of the collar and the bottom of the groove in the overcap.

Q. (By Mr. Conrad) Now, do you have any other comments with respect to these Defendant's Exhibits 104 through 116 on which Mr. Fishleigh's testimony regarding infringement was based? A. An additional comment about the lateral deflection which induces an apparent angularity would be made with respect to the effect caused by the cut-away upon the thrust of the threads in the case of model 108, which does not have a spacer washer beneath the skirt, but which same [473] overcap has been apparently overtorqued to the point where at least the cut-away portion shows contact with the block, this dis-

tortion is created by having 270 degrees of upward thrust on the overcap, which is caused by contact with the threads, and on the other side a void with respect to any restricting member, and therefore an eccentricity is induced, pulling the overcap into its distorted shape.

Q. Now, with respect to this matter of getting an overcap on straight, does the presence of the plunger have anything to do with that? A. Yes, the presence of the plunger is instrumental in keeping concentricity of these related elements during assembly because of contact of the conical inner wall of the upper portion of the overcap engaging with the elements shown as 8 and 9 on the head in Exhibit QQ, coacting with a flat surface-to-surface contact at the top of the head between the top of the head and the inside top of the overcap.

Q. Now, could the plungers have possibly been in place when defendant's models 102 through 108 were prepared? A. I don't conceive of a method of making these models without disassembling the structure as manufactured and creating a new assembly not representing that which was produced.

Q. Now, were you here when Mr. Fishleigh was telling how [474] these models were prepared? A. Yes, I was here.

Q. Now, did you understand from that that these caps which are used in models 102 through 108 may have been being applied for the second time when these models were prepared? A. I'm not sure that that was made perfectly clear. It had to have been at least more than that, because they were applied originally in our manufacture, and subsequently they were removed and cut and somehow replaced.

Q. Well, now, as a practical matter in the conduct of your business, what, if anything, do you say to your customers about removing a cap and replacing it because of the effect it might have on the seals? A. In every box that is shipped containing SS-40 shipper sprayers, we include a printed instruction sheet in bold face type, giving instructions that the overcap must not be removed in order to avoid disturbing the seals.

Q. Now, what is the reason behind that? A. Because the proper relationship is acquired in assembly in our plant, and the disturbing of these seals means that they have been taken out of their proper relationship and that they will not return to that relationship.

Q. Now, can you tell from an examination, for example, Defendant's Exhibit 108, whether or not the overcap and the collar which are comprised in that exhibit were cut at the [475] same time? A. No, they were not cut at the same time.

Q. Well, now— A. At least in one significant case—in the case of Exhibit 104, if the collar and the overcap were cut at the same time, they have been subsequently disturbed. In the case of 102, it is not clear. However, in the case of 108, whether it has been disturbed or not, it has definite indication that they could not have been cut at the same time because of the difference in amount of cut-away. The groove and the collar have been cut away to a greater extent than the cut-away of the collar, indicating that the collar could not have been cut at the same time the overcap was.

Q. What effect would that have on the validity of the model as representing the commercial structure of the SS-40? A. It has no relation to the structure of the SS-40, because the overcap was applied to an incomplete collar.

Q. Now, in examining any of those models, do you find that the relationship of the overcap and the retainer on one side of the cut, as depicted in the photographs, is any different than what can actually be observed on the other side of the cut on the very same model? A. I would say that the two sides are not in complete agreement.

Q. Do you have any further comment on the Defendant's Exhibits [476] 102 through 116? A. In Defendant's Exhibit 116 the outer annular ring of the retainer appears to have been deflected outwardly, indicating a response to an excessive amount of pressure, and the broken hoop is perhaps a major contributing factor to its yielding, coincident with the eccentric nature of the load.

Q. Any further comments on those exhibits, Mr. Corsette? A. No.

[477] Q. Mr. Corsette, I have mounted to your right Defendant's Exhibit 120, which was referred to Mr. Fishleigh in the course of giving his testimony concerning the applicability of these claims in suit to the SS-40. I now direct your attention to those Figures 1 and 2, to which he referred, which were reproductions, I believe, of Figures 1 and 2 of the Cooprider Patent, and ask with respect to the seals shown whether there are any differences between the Calmar SS-40 as made and shown in the construction in Fugures 1 and 2 of Defendant's Exhibit 102? A. On the showing of Figures 1 and 2 of the Cooprider Patent, as shown on Defendant's Exhibit 120, it shows a different combination of seals from what is used in the commercial model of the SS-40.

Q. Now, just for the assistance of the Court, Mr. Corsette, you might move your drawing of the SS-40 into proximity with the Defendant's Exhibit 120, and perhaps that will enable you to better compare the two showings. A. In the Figures 1 and 2 of the Cooprider Patent is shown a shipper sprayer of a type having a probe seal in the same general area as does the SS-40. However, the significant difference lies in the nature of the head to collar seal of the two different models, and the overcap to collar seal as well and their intended functions. [478] In the case of the Cooprider Patent, there is not shown a gap at the outer annular ring of the collar below the corresponding face of the overcap and the nature of the seal as disclosed by the Cooprider Patent between the head and the collar is one of telescoping arrangement such that the lower portion of the head referred to as a skirt would descend into a slightly conical well in the collar to permit some variation in the vertical position of the plunger; in other words, to accommodate tolerances while this is not true in the case of the SS-40. The commercial sprayer SS-40 has instead a rigid relationship between the head and the collar and its lower limit of travel of the plunger and a telescoping or sliding type of labyrinth seal in the overcap to collar seal.

Q. Now, will you point out what, if any, differences there are in the form of the retainer or collar shown in the Defendant's Exhibit 120 and the form of the retainer or collar which is actually employed in the commercial

Calmar structure? A. The retainer or collar in the Cooprider Patent is principally telescoped inside the barrel extension of the cylinder and it has also an annular groove but a much higher outside annular ring. The SS-40 has external engagement of the retainer and barrel extension and the [479] top of the outside annular ring of the retainer is relatively shorter and the retainer of the SS-40 has a strong lower seat to receive the head and to stop its downward travel while in the case of the Cooprider showing there is not that engagement of the bottom of the head for the seat and the collar.

* * *

[420] Cross-Examination by Mr. Schmidt.

Q. Mr. Corsette, I would like to point up a few miscellaneous matters first. If I understood you correctly, in referring to the Plaintiff's Exhibit G, you were speaking about screwing the overcap onto the container. Did you intend to say that? A. I thought I said "retainer".

Q. You said "retainer", not onto the container. All right. Now, with respect to the drawing that you utilized in producing Exhibit QQ, is not that the same drawing, if you recall, that was referred to during your deposition as Exhibit 29? Do you recall that? A. It may be although there were two such drawings at least in exhibits during my deposition. This may have been one or the other.

Q. I show you the Wise Deposition Exhibit 29, and ask you to compare it with Plaintiff's Exhibit QQ, and tell me whether or not they are not identical? A. Some of the numbers on Exhibit 29 have not been reproduced on Exhibit QQ, but from what there is I would say that they are intended to be identical.

Q. I am not concerned about that. All I want to know is whether or not QQ was taken from Wise Deposition Exhibit 29? [483] A. Apparently it was.

Q. Now, is that Deposition Exhibit 29, in your opinion, an engineering drawing? A. In the technical sense of engineering drawings having dimensions which are used for the purpose of controlling truly, this is not an engineering drawing.

Q. Would you term it a somewhat freehand sketch? A. It is not freehand. It is termed a sketch in our terminology to differentiate between types of drawings.

Q. Is it to scale and taken directly from a device? A. It is essentially to scale with respect to the principal components.

Q. Could that drawing be used by mold makers, for example, in producing a mold in turn to produce the SS-40? A. In the true sense of the term "mold maker", I believe that it could be done if he were to exercise the liberties of a mold maker in arriving at the proper dimensions of the tooling.

Q. If he followed Plaintiff's Exhibit QQ, and used that as his guide for all dimensions, would he then come up with the SS-40? A. One thing that is not clear on Exhibit QQ, which I pointed out earlier, is a blurring of the lines, especially in the area designated "4", especially with respect to the designated No. 14 on QQ, which is clearly shown [484] as a gap on Exhibit 29 of Wise's Deposition.

Q. Aside from that, would he have all of the dimensions and all of the tolerances that he needs to come up with the SS-40? A. He would not have dimensions.

Q. Would he have tolerances? A. I see no reference as to what tolerances are given. He would as a mold maker have to determine those.

Q. If I recall it correctly, at the time of your deposition and at the time of Mr. Wise's deposition, you had no engineering drawings, do you recall that? A. Showing this assembly?

Q. Yes. A. We still have no engineering drawings showing this assembly.

Q. And that is the best that you had from which to in turn make the Plaintiff's Exhibit PP, is that correct? A. This Plaintiff's Exhibit PP was made from a drawing such as Exhibit QQ.

Q. Such as? I understood in your direct testimony that they were made directly from QQ? A. I said it was made from a drawing such as QQ, in that the drawing which was used to produce the original of Exhibit 29 shows cross-sections or section lines on the various components and the

drawing, the specific drawing from which the Exhibit PP was made, because Exhibit QQ [485] was, this exhibit was made from the drawing which was made from the original of QQ.

Q. Do you have the drawing from which Plaintiff's Exhibit PP was made? A. I do.

Q. Do you have it with you? A. I am not sure whether I have one with me or not. I don't believe I have.

Q. Will you check during the recess? A. I will check.

Q. Now, you say you still have engineering allowance. Do your mold makers use Plaintiff's Exhibit QQ for the purpose of making molds? A. They do not. They work to detailed engineering drawings of tooling.

Q. Then you do have engineering drawings, is that correct? A. Yes.

Q. Yet you are exhibiting what purports to be the SS-40 from Plaintiff's Exhibit QQ, rather than from engineering drawings, is that right? A. Our engineering drawings show tooling, they do not show an assembly of the sprayer components.

Q. I would like you to be more specific as to the dimensions and tolerances. A. They may be out of scale but they are intended to be [486] in scale and the dimensions control specific size and configuration.

Q. So we do not have any drawings that are comparable to your engineering drawings or mold drawings that will clearly and exactly illustrate the nature of the SS-40? A. We have drawings of the tooling, engineering drawings of the tooling.

Q. You suspect you may have those with you? A. I doubt I may have those except those that may appear in the Wise deposition exhibits.

Q. Now, let us compare Plaintiff's Exhibit QQ with Plaintiff's Exhibit PP. Is it your contention that Exhibit PP is identical with QQ? A. As nearly as the people who made the model could follow it, it is. The master from which the print was made for PP was an auto-positive reproducible vellum which was made by a blueprint company from the master of this Exhibit QQ, but it was section lined.

Q. As I understand your direct testimony, the inner and outer surfaces of the groove within the retainer in QQ are supposed to be cylindrical and parallel, is that correct? A. Yes.

Q. And also in connection with QQ, the inner and outer surfaces of the rim that extends down into such groove [487] are supposed to be vertical, cylindrical and parallel? A. Yes.

Q. Does it follow then in accordance with QQ, the inner and outer surfaces of the groove, the downward-facing groove, and then the overcap are parallel and cylindrical? A. They are in the tooling.

Q. In the drawing? I am speaking of the drawing, QQ. A. I believe that in the drawing they are also shown that way.

Q. Then, tell me why that has not come out in the Model PP. A. To what respect are you referring?

Q. With respect to those parallel, vertical, cylindrical surfaces. A. I can't say unless it is an accumulation of paint.

Q. You had a scale or ruler or gauge that you were using on direct. Will you step over and measure and tell us whether or not those surfaces are all in the model vertical, parallel and cylindrical? A. The only surfaces that I can measure on this member are this and this (indicating), referring to the outer annular ring of the retainer in the Exhibit PP and the depending annular ring representation on the model as part of the overcap. In this illustration in this scale I consider it fairly close representation considering the fact that in shipping it here there was some damage which [488] had to be repaired in order to illustrate the workings of the model.

Q. Will you measure across the groove in the overcap both at the base and at the open end of the groove? A. On which side?

Q. Either side or both. A. On the right side the top and bottom of the groove is the same. On the left side there is 12-thousandths difference between the top and bottom.

Q. Is that not more properly and correctly illustrative of the true nature of the cover cap of the SS-40 than Plaintiff's Exhibit QQ? A. I couldn't agree with that.

Q. Why not? A. The Plaintiff's Exhibit PP was not actually made by us. It was made from a drawing made by us and in illustrating the principles of operation of the SS-40 itself, the people who made the model apparently were unable to adhere to machining tolerances in that scale on masonite.

* * *

---

[489] DOUGLAS F. CORSETTE,

resumed the stand, having been previously duly sworn, and testified further as follows:

Cross-Examination (continued) by Mr. Schmidt.

Q. Do I understand your testimony to be, Mr. Corsette, that all of the surfaces adjacent the overcap to collar seal are in fact at all times vertical, parallel and cylindrical? A. As they are molded, yes.

Q. Do they remain that way after the parts are taken from the mold? A. Yes.

Q. Do they remain in that condition after the cover cap is placed on the collar? A. I believe they do.

Q. How do you know that? A. I would think that these X-rays tend to indicate that.

Q. Can you show us in the X-rays? Can you illustrate where [490] in the X-rays that is demonstrated? A. There appears to be vertical entry of the sleeve into the collar well.

Q. But I mean can you point it out in the X-ray itself other than having us hold it up and look at it? Is that the only way we can tell? In other words, do you have anything else to demonstrate what is shown in the X-ray? A. Well, the tooling drawings that we submitted with the Wise Deposition Exhibits show the perpendicularity of the tooling.

Q. Yes. Do you have any drawings showing the parts themselves after they are taken out of the mold? A.

There is also a drawing of the overcap, submitted with the Wise Deposition Exhibits, which we discussed at the time of those exhibits was not an accurate representation.

Q. Do you have any engineering drawing showing an accurate representation of the parts of the SS-40? A. Not of the parts.

Q. Now, which particular devices were used when the X-ray was made? From what parts were the X-rays made? Do you have those here? A. No, I don't. I did not make the X-rays.

Q. Who did? A. I believe they were made—I couldn't say who made them.

Q. Do you know when they were made? [491] A. I couldn't say that.

Q. Do you know where the sprayers are from which the X-rays were made? A. I couldn't say.

Q. I hand you Defendant's Exhibit 121, and ask you whether or not you are the Douglas Corsette who is named as a co-patentee therein? A. I am.

Q. Are you familiar with that patent? A. In a general sense, not specifically.

Q. You are in fact a co-inventor of the subject matter of the patent, are you not? A. Yes.

[492] Q. I hand you now Defendant's Exhibit 122, which is the file history of the Corsette patent, Defendant's Exhibit 121, and I will ask you to turn, first, to page 39 in Defendant's Exhibit 122, and refer, if you will, to lines 7, 8 and 9. Now, you will recall, I believe, hearing Mr. Fishleigh read into the record the fact that at that time, which is April 12, 1959, that it is said that the embodiment, preferred embodiment, illustrated in Figs. 1 and 2 of the drawings are now in large scale, commercial production. Do you agree with that statement? A. I do not. The Figures 1 and 2 were never in commercial production.

Q. So there has never been a change in the actual production of SS-40, is that correct? A. No, sir. I mean yes, it is correct.

Q. That is correct. And Figs. 1 and 2 then do not, as alleged in the representation to the Patent Office, represent a commercial production. A. In detailed configura-

tion they are not—they represent a change in the thinking of the seals with respect to which is rigid and which are yielding.

Q. Why did you make a change? A. It was found in the course of trial tooling that the difficulty in maintaining the telescoping type of seal [493] between the head and the collar, both members being rigid, it was difficult to rely on as a shipper sprayer; therefore, there was a change in the concept of which seals were rigid and which ones were yielding.

Q. Well now, I note in Plaintiff's Exhibit G, that there has been provided in part a yieldable corner. Are you familiar with that construction? A. Yes.

Q. I am speaking of the yieldable corner in the cover cap. A. As illustrated by the Scoggin patent picture.

Q. Yes. Now, in Plaintiff's Exhibit PP you have no such yieldable parts except for the probe, is that correct? A. Are you referring to the specific materials with which the model is made?

Q. Yes. A. Yes. Where there was expected to be yielding in the member, the model makers put a resilient material in order to respond to the picture in the case of Exhibit G, the picture of the Scoggin patent disclosure, and in the case of the Calmar SS-40 model, Plaintiff's Exhibit PP, the cylindrical nature of the seals there did not require that the overcap itself be made of rubber or otherwise simulating the flexibility as the case of the Exhibit G, the overcap itself is also made of the same material, which is a masonite type of sheet material.

[494] Q. A relatively hard, non-yielding substance, isn't that right? A. That is right. And in the case of the Scoggin patent, in order to show what the patent had disclosed, a piece was cut out and a piece of the overcap material was cut out, and inserted was a sponge rubber member faced with a clock spring steel in order to permit it to slide down the conical segment on the retainer, to simulate the flexibility of the seal on the—purported to be on the Scoggin device. On the Calmar SS-40, the cylindrical nature of the two mating members was such that it was not required to simulate the entry of the depending ring on the overcap into the annular groove in the collar.

Q. You did not feel it was necessary to provide yieldable material at the sealed area between the overcap and the collar in Plaintiff's Exhibit PP, is that right? A. It is yieldable only in the sense that the entire overcap is yieldable.

Q. It is yieldable in much the same sense as the material from which the defendant's structure is made, is that not correct? A. With the exception of the rubber insert on the—

Q. I mean in commercial production. A. Would you state that again, please?

Mr. Schmidt: Would you read the question?

[495] (Question read.)

A. What is yieldable?

[496] Q. I am saying that the materials used by Calmar— A. You are referring to models—

Q. I am referring to the commercial exhibits. A. The material from which the Calmar overcap is made I believe is of a higher hardness than that with which the Bakan overcap is made, from the feel of the material it would seem that way.

Q. I don't care to belabor the question. All I want whether or not the material in each instance is somewh. yieldable in both instances? A. Yes.

Q. Now, therefore, referring to Plaintiff's Exhibit PP, when I press downwardly on the top of the cover cap as I am now doing, what is it that prevents further downward movement of the cover cap with respect to the collar? A. In the model itself it is the engagement of the head with the collar or retainer.

Q. And that is at the point that you designate "3" in Plaintiff's Exhibit QQ, is that not correct? A. "3" and "2".

Q. Now, in Plaintiff's Exhibit PP, by virtue of the hardness of the material from which the collar is made and the hardness of the material from which the head is made, it is not possible for me to push this cover cap down any farther, is that not right? [497] A. Depending upon what you push it with, and the point at which you will break one or the other of the members, or both. In

normal assembly that is as far as it will go, when it is bottomed.

Q. But the slight pressure that I am placing on the cap at this time? A. That is not the normal pressure, or whether it is possible to destroy the model.

Q. But it is true that the reason I cannot put it down farther without extreme amount of pressure is because of the non-yielding nature of the materials from which the collar and the head are made? A. That is right, that is essentially a rigid relationship.

Q. Now, is that the same relationship that you would get in the SS-40 itself? A. I am quite sure it is.

Q. Notwithstanding the yieldable nature of the materials from which the head and the collar are made in the SS-40? A. The materials from which the head and collar are made are relatively unyieldable with respect to what the material or the cooperation in connection with the amount of force being applied.

Q. Let me ask you how you know in the SS-40 that the relationship between the cover cap as applied is precisely as illustrated in perhaps Exhibit PP when I push the cover [498] cap down as far as I can with a normal amount of pressure? A. In the course of the development we have found what the length of that composite stack, as you refer to it, should be, and it is on the production line held to within the required limits of total length from the bottom of the washer probe to the top of the head.

Q. What are those limits? A. I don't recall offhand.

Q. Do you know the tolerances? A. The tolerances on the total stack are, I don't recall what they are specifically; they are comparatively narrow with respect to the accumulated pile-up, if you were to consider the tolerances of each component.

Q. What are the dimensions of the retainer? A. I think that they are approximately, quite closely as shown in one of the drawings in the Wise deposition exhibit.

Q. Do you know the tolerances? A. I think they are probably the usual mold and tolerances for rigid vinyl.

Q. Are those normally close tolerances as far as that material is concerned? A. Yes, they are quite close.

Q. They can be maintained? A. Yes.

[499] Q. Do you have the dimensions of the overcap? A. The tooling dimensions I believe are on one of the drawings in the Wise deposition exhibit, with the exception of one deviation of a dimension which is missing and was pointed out in my deposition.

Q. Those dimensions that you are now talking about are mold dimensions, are they not? A. Yes, sir.

Q. I am speaking about dimensions of the parts after they are removed from the mold. A. The required dimensions are established through testing and gauges are set to control; the measurements are taken in the production to maintain those limits.

Q. You do not know what those dimensions are? A. I do not have all of those dimensions in mind.

Q. And the dimensions in all of those plastic parts do change, they are different from the dimensions that you have set up in the mold? A. Are you speaking in terms of shrinkage?

Q. Yes, perhaps. A. Yes, perhaps will shrink from what the cavities or the mold components are at the time that the plastic is injected into the cavity and, therefore, it is after they are put together that we establish the control.

Q. Now, looking again at Plaintiff's Exhibit PP, where will [500] you have the greatest amount of shrinkage, at the time that the product is in the mold or after the removal in the covercap? A. It will shrink greater in length in proportion to the other dimensions, I would say.

Q. It will shrink more vertically of the cover cap than transversely? A. Not necessarily in the same ratio.

Q. What about the shrinkage in the area of the cover cap to collar seal? A. Are you speaking of transverse or vertical?

Q. Both. A. Well, it is difficult to say just which direction shrinks the most at that particular point since we measure the part after it has been molded to determine its suitability.

Q. Let's take the lowermost end of the sealing ring, that is designated "90" on the patent, and compare the shrinkage there with the upper end of that ring. A. I don't believe 90 refers to the same thing in both instances.

Are you referring—the depending member within the overcap in its entirety in the case of the Cooprider Patent and what portion were you referring to?

Q. That is the portion that is called a ring in your patent. A. What do you wish me to compare?

Q. I am asking you about the shrinkage characteristics at [501] the lowermost end of that ring as compared with the upper, the base end of the ring. A. That would be hard to say because the drawing is suppositionally in this case such that the mold tooling would be adjusted to compensate for any discrepancy between what was desired and you couldn't compare the shrinkage of an actual part with the element here.

Q. I mean in actual practice, where do you get the most shrinkage? A. In the components?

Q. Yes. A. I would say principally in the side walls of the cap.

Q. Where as between the upper end and the lower end of the ring? A. The axial shrinkage; I would guess it would be fairly uniform in a shrinking condition.

Q. But you don't know. You are guessing, is that true? A. Are you talking of axial shrinkage?

Q. Yes. A. Seeing no restraint I would say, yes, that is true.

Q. I believe you indicated that in the SS-40 that in truth there is a clearance at the sealed portion such that you get no bottoming in the grooves of either the collar or the cap, do I understand you? A. That is in the ring "4".

[502] Q. Yes. A. On Exhibit QQ.

Q. In the SS-40 as commercialized. A. It is conceivable that the feather flange on the lower internal extremity of the seal ring of the overcap could touch the bottom of the annular groove; however, there will be a gap at the point indicated "14" on the Calmar SS-40 drawing shown as Exhibit QQ.

Q. How great a gap? What is the clearance? A. It is approximately in the neighborhood of 20-thousandths or more.

Q. How do you know that? A. From the dimensions of the related members which hold the overcap out of engagement.

Q. That you said you didn't know what the dimensions were? A. We have the mold parts and we know when we are—if we are not getting a seal at any given point by our lab tests, then we can adjust such that we know that the overcap depresses the head into engagement in the area "2", and "3", and the dimensions that were controlling on the overcap have been established to prevent the seal from engaging any horizontal or limiting surfaces to prevent the overcap from pulling the thrust down to the plunger.

Q. Do you mean to say that the tolerance on this type of material is such that you can maintain that precise [503] amount of tolerance at all times? A. We have gauge limits which the quality control people monitor perpetually throughout the production runs of overcaps to maintain them within the gauge limits of the overcap.

Q. Do you mean to say that the materials from which the head and collar are made are of sufficient relative rigidity that it would be impossible to permit the head to go down farther at point "3" and close that minute gap that you allege at the top of the ring of the collar? A. Yes, and I have a cut-away of some of these components which might illustrate this. I have a cap portion such that the skirt member of the cover cap has been cut away as not to cut any of the surfaces of the annular seal ring flange, and the hole cut in the top to see the engagement with the top of the head and the internal plunger in sub-assembly arrangement with the collar and you can determine the rigid nature of the engagement of these two members and you can insert these members in their assembled relationship to see that you cannot press them further together.

Q. Now, you have the parts assembled. Can you tell now by looking at it that you have no gap? A. It is evident from this model that there is a significant gap at the place indicated on these components.

[504] Q. That is the seal area "4"? A. Yes.

Q. Is that also true to your visual inspection of the cross-sectional model that you were working with this

morning? A. The cross-sectional model that I was working with this morning apparently has a similar gap, although it has been sectioned through the overcap and collar, but the gap appears to be there as well.

Q. Now, is that gap more clear to you than the section model that you have just examined and more clear to you in the larger model, Plaintiff's Exhibit PP, insofar as accurately telling us what this is all about and than can be determined from the photographs, Defendant's Exhibits 110, 112, 114 and 116? A. The photographs are pictures taken of cut-aways where the hoop relationship has been disturbed and the cut has been made through the contours of the related elements, such that their true relationship is obscured.

Q. What do you have to demonstrate and show us insofar as exactly what we have here is concerned that is more reliable and more easily understood than those photographs? A. I believe I can by examination of this member where I have cut away the overcap skirt exposing the external surface of the annular seal ring of the overcap, that perpendicularity to the plane of the bottom extremity is indicated when compared with known parallel surfaces.

[505] Q. Now, that is all you have, your testimony as you see that, as compared with the photographs, is that correct? A. That is all the evidence that I have with me with respect to a physical demonstration of this cylindrical nature of the seal, the seal ring on the overcap.

Q. And that is all you have with you with respect to telling us the details of construction of any of the parts of the collar and the overcap, is that not correct? A. The detail—detailed type of construction of the collar has been described in the Wise deposition exhibit drawings, Exhibit G, tooling dimensions of that part, with the noted exception of the one missing dimension discussed at my deposition.

Q. And with the exception that we don't have any drawings or dimensions of the parts themselves after they come out of the mold? A. That is right.

Q. Take another look, if you will, at Defendant's Exhibit 110, a photograph. Do you see in that photograph

that the upper edge—the upper edges, I should say—of the ring, the outer ring of the collar, are rounded or beveled? Does that not so indicate? A. That appears from the photograph to be true.

Q. Now, do you have any doubts with respect to that being true and accurate? [506] A. There probably is some tiny radius as indicated by the point of the cutting tool that made that diameter in this particular case, that a perfectly square corner in this magnification is quite impossible with any cutting tool.

Q. You do not have that rounded corner, those two rounded corners, depicted in Plaintiff's Exhibit PP, do you? A. At least not in scale, there appears to be slightly rounded corners on the Exhibit PP. What their dimensions are specifically, I couldn't say on the model.

Q. Do you have any disagreement with the shape and configuration of that outer ring of the collar as shown in Plaintiff's Exhibit 110—Defendant's Exhibit 110, I'm sorry. A. I would have to compare it with the drawings to be sure, but I would say in this scale that this is not a bad representation.

Q. What drawings did you want to compare it with? A. In Wise deposition drawing, I believe these may be a radius indicated on that drawing, a slight radius, usually similar to breaking a corner.

Q. Didn't I understand you to say there were no parts drawings? A. There is a picture of a part. It is not a detailed engineering drawing.

Q. Since it is not a detailed engineering drawing, you can't [507] very well make comparisons, can you? A. It is not a detailed engineering drawing in that sense, but is only indicative of how the tooling should be made.

Q. Do you have any misgivings with respect to the shape and configuration of the depending ring from the overcap as shown in Defendant's Exhibit 110? A. Yes, it shows here, as indicated previously, in Defendant's Exhibit 120, represented in the stage 1 view, as showing some angularity of the depending ring, which amounts to a lateral displacement of something in the neighborhood of one-thousandths of an inch.

Q. I am speaking of the shape and configuration of the ring 90. A. I think the indicated angularity is part of the configuration as it deals with its location in the overcap.

Q. Is there not a difference between attitude and position and configuration in your mind as an engineer? A. Where configuration is related to a relative position I think it is pertinent.

Q. Does the word "shape" help you? A. Yes.

Q. Do you have any misgivings as to the shape of the element 90? A. I think that probably that radius shown on the lower left extremity of the element is within the scope of what [508] might be expected on this scale.

Q. Now, again in Defendant's Exhibit 110, do you have any misgivings with respect to the way in which the ring makes initial contact with the collar? A. Yes.

Q. What are those misgivings? A. I believe that the depending seal ring of the overcap descends vertically into the annular groove of the collar.

Q. And upon what do you base that belief? A. By the control with which we measure our production and as indicated on these models which I have in my hand, showing the entry of this depending sleeve into the collar.

Q. Do you mean to say to us, Mr. Corsette, that you can tell more accurately from your own eye looking at that small model where initial contact is made than you can in an enlarged photograph of the structure itself? A. The enlarged photograph is made of a section which is not assembled in the normal relationship in which these members meet.

Q. Do you have anything to show us that is as accurate as those models from which the photographs were taken? A. At this position the collar and overcap have approximately one-quarter turn of thread engaged, and it would rely upon the positioning of the overcap by the plunger member [509] to hold it in its proper position.

Mr. Schmidt: Would you read the question to the witness, please?

(Question read.)

A. By that do you mean accurate representation of the model or of the production conditions?

Q. (By Mr. Schmidt) Of the SS-40 as you allege it was being produced. A. I believe that the X-rays mentioned earlier more closely depict the relationship.

Q. And it is your position that those X-rays are better capable of showing where that initial engagement is effected than you can tell by looking at Defendant's Exhibit 110? A. I believe they indicate a straight entry.

Q. I ask you to look at this X-ray again and tell me whether or not the X-ray indicates in any way at all where the initial engagement is between the ring 90 and the proximal part of the collar? A. The X-ray does not show the overcap in the same position as Exhibit 110.

Q. Then you have nothing to demonstrate to us what takes place when an initial contact is made between the parts of the overcap and the collar? A. This is not their normal assembled relation. I do not.

[510] Mr. Schmidt: Would you read the question, please?

(Question read.)

A. No.

Q. (By Mr. Schmidt) Tell me now why, when you commenced working with Mr. Cooprider on the SS-40, you found it necessary to provide a cover cap-to-collar seal? A. I believe it was a principle of redundancy or repetition whereby in the normal production procedures if any one of the internal seals should fail that there is another downstream stop.

Q. And is it your feeling that the SS-40, as today commercialized, has a cover cap-to-collar seal for no good purpose whatsoever? A. I believe that redundancy is a good purpose in that if a faulty part should permit a leak or, such as a nick on the head, that the overcap seal would serve as a backup.

Q. What is your definition of redundancy as you are now using it? A. An additional member serving a purpose of adding additional seal.

Q. That is your definition of redundancy? A. The overcap is an additional seal external to all seals which we have referred to as internal seals.

Q. And therefore it is redundant? [511] A. It is not redundant in the sense that it is the same kind. It is redundant only in that it is an additional seal, as far as the package itself is concerned, including the container and its contents.

Q. When does it seal? A. It functions to stop leakage only if seepage should get into the overcap.

Q. When is the seal effected at area 4 during assembly of the overcap on the collar? A. It is effected when the head has reached bottom in the collar or retainer.

Q. If I understood your direct testimony, the first seal that is effected is at 1 in Plaintiff's Exhibit QQ? A. Normally that is true, yes. That is dimensioned so that 1, the seal at 1 in QQ is the first element to be engaged.

Q. Now, you have a full seal at that time. That is your seal—you would not leak from that point on, is that correct? A. That is the seal which blocks flow through the normal discharge channel.

Q. And yet the plunger is not yet at the lower end of its path of travel, is that correct? A. That is correct.

Q. Now, where is the second seal effected? A. When the plunger hits bottom in the collar, when the head [512] engages the collar at point 3.

Q. And then you have a seal established at 2? A. Yes.

Q. In Plaintiff's Exhibit QQ? A. Yes.

Q. Has that done anything to the previously established seal at 1? A. I should think not.

Q. Notwithstanding the fact that the plunger went down farther? A. The plunger went down farther, yes, to engage the tightness—to exert pressure on the seal at 1.

Q. Now, where is the third seal established? A. The third seal is established between the overcap and the retainer.

Q. At area 8 in Plaintiff's Exhibit QQ? Or maybe I misunderstood you. I'm sorry.

Mr. Schmidt: Would you read his answer.

(Answer read.)

Q. (By Mr. Schmidt) You mean at 4, at area 4? A. Yes, area 4.

Q. That seal is effected after the seal is established at 2 in Plaintiff's Exhibit QQ? A. Because of the telescopic nature of these elements in the labyrinth configuration, it is difficult to say at what [513] point you do first have a seal. At least, you are sealed in that area by the time the plunger is down to its bottom position.

Q. It follows, then, that you could have a seal in area 4 before you have reached the bottom of the path of travel of the head? A. Slightly before, this is possible.

Q. Now, when do you effect the seal between the overcap and the head at the area 8? A. I couldn't say, as we—in the commercial embodiment we do not actually evaluate this area as a seal.

Q. You do not? There is no collar-to-head seal in your SS-40? I'm sorry, no cover cap-to-head seal in your SS-40? A. Those areas are—in their original design they are designed to fall on the same surface, and it was thought originally that we would pursue a seal in this area, but as in the commercial embodiment it is primarily for centralizing the overcap, and the degree of seal that is obtained at that point I couldn't determine.

Q. Then, as a matter of fact, insofar as you know, you have not been able to successfully commercialize the SS-40 and effect a collar-to-head seal? A. I would say rather that we hadn't tried. We found that the seals—when we got into production the seals between the head skirt and the retainer, and the cup washer and [514] the ball, when assembled were quite reliable and that the overcap seal with the collar was merely an added feature.

Mr. Conrad: Excuse me, Mr. Schmidt. Will you reread the question?

(Question read.)

Mr. Conrad: Collar-to-head seal?

Q. (By Mr. Schmidt) Again I'm sorry. I think you and I were thinking the same thing but were saying a different thing. We were talking about an overcap-to-head seal. Now, does that change your thinking? A. Yes, it does. We have a reliable head-to-collar seal, but we have not in the zone designated 8 in Plaintiff's Exhibit QQ evaluated this seal.

Q. Now, with respect to the redundancy of your over-cap-to-collar seal, I ask you again to pick up Defendant's Exhibit 122, the file history of the Corsette-Cooprider patent, and will you turn to page 50, and refer to lines 3, 4, 5 and 6, please. Have you read what is stated in those lines? A. I don't recall that I did.

Q. I mean have you now read it? A. Yes.

[515] Q. Do you today disagree with the contention therein made and representation made to the Patent Office in your prosecution of your application that the cap to collar seal is an important feature of your invention? A. In that it is to come into play only upon failure of one of the internal seals, this is an added safety feature.

Q. Referring now, if you will, please, to page 63, will you refer to line 16, commencing with the words, "In order to", read, if you will, please, those two sentences commencing at line 16. A. "In order to effect a satisfactory seal, the sealing surfaces must be angularly related to the plunger axis, whereby downward movement of the plunger permits the application of pressure between the sealing surfaces."

Q. And the next sentence. A. "Where the engaged surfaces are parallel to the plunger axis, as in the cap and head of Fischman, the application of pressure to effect a seal is obviously not possible."

Q. One more question, Mr. Corsette. Do you agree with the statement made by Mr. Wise that there are in fact instances in your SS-40 sprayer wherein there is leakage into the upper overcap? A. There has been in some tests indication as in any production item, occasionally a reject might cause some leakage into the overcap.

[516] Q. Would you find in those instances that the overcap was effective in preventing such leakage from flowing externally of the cover cap into the outside container? A. Generally speaking, it is.

Mr. Schmidt: Thank you.

A. In the commercial embodiment.

Re-Direct Examination by Mr. Conrad.

Q. You still have in your hand the Cooprider file wrapper? A. Yes, sir.

Q. Will you turn to page 52, please? A. Yes.

Q. Do you see the paragraph there beginning, "In order"? A. Yes.

Q. Will you read the first sentence of that paragraph into the record, please? A. "In order to provide an effective seal, it is necessary (1) that contact between the sealing surfaces be made under substantial pressure, and (2) that the sealing surfaces be formed either to provide an elongated tortuous path through which the liquid must pass, or some wedging action such as is provided at 24, 25 in Fischman."

Q. Now, Mr. Corsette, at some point in your discussion with Mr. Schmidt, you used a model which you had prepared I believe in which you cut away the cap skirt so as to [517] reveal the seal flange on the o[illegible]ap? A. Yes.

Q. What was your purpose in making that demonstration? A. The purpose of making the demonstration was to illustrate that actually the external surfaces that are visible on this portion of the overcap will indicate when observed between known parallel surfaces that the depending seal ring of the overcap is cylindrical.

Q. Did you also use that to show some way that when the plunger was fully depressed that there still was a gap between the retainer and the bottom of the groove in the overcap? A. Yes, I have the sub-assembly of the plunger element assembled with the retainer in such a manner that the force with which the head is able to resist pressure into the collar is exhibited and the corresponding relationship with respect to the sealing element of the cap and head, as the overcap is held from further downward movement by the head, leaving a gap at point designated "14" in Exhibit QQ.

Q. May I have that, please?

Mr. Conrad: Your Honor, I would like to mark that in evidence as Plaintiff's Exhibit UU.

* * *

[518] LAWRENCE C. KINGSLAND,

being produced, sworn and examined as a witness on behalf of the plaintiff, testified as follows:

Direct Examination by Mr. Conrad.

Q. Will you please state your name and occupation? A. Lawrence C. Kingsland. I am a lawyer practicing patent and trademark law.

Q. You are a member of the firm of Kingsland, Rogers, Ezell & Robbins? A. Yes, sir.

Q. You have been a member of the Bar with the State of Missouri since the year 1907, and are a member of the Bar of the United States Supreme Court? A. That is correct.

Q. You were registered to practice in the Patent Office in 1909 and have been engaged in the practice of patent and trademark law since that time? A. That is correct.

Q. And in the course of that time you prepared and prosecuted many hundreds of applications before—

Mr. Schmidt: If your Honor please, we shall be happy to stipulate as to the qualifications of this [519] gentleman.

Mr. Conrad: I appreciate that offer on behalf of Mr. Schmidt but I would like to have the qualifications in the record very briefly, your Honor.

The Court: Very well.

Q. (By Mr. Conrad) You have appeared as counsel in patent infringement suits representing clients, both plaintiffs and defendants? A. Yes, sir.

Q. You have argued patent cases in the Courts of Appeals in all Circuits and have appeared in patent cases before the United States Supreme Court? A. That is correct.

Q. You have testified in the Federal Courts as a patent expert and acted as a Master in patent cases? A. I have in a number of cases.

Q. In 1947, at the request of the Phillipine government, you traveled in Manila and worked with judicial officers and prepared a draft of patent and trademark law? A. Yes, sir.

Q. And that draft was adopted by the Legislature as the patent and trademark laws in the Phillipines? A. That is right.

Q. You were appointed Commissioner of Patents in August of 1947, and served in that capacity until the beginning [520] of 1950? A. Yes. I left there the first of December, 1949. I was on terminal leave until the first of the month.

Q. Since leaving the Patent Office, you have returned and still are engaged in the patent and trademark law? A. That is correct.

Mr. Conrad: Your Honor, I respectfully move the Court to rule that Mr. Kingsland is qualified to testify as an expert in this case.

The Court: Yes.

Q. Mr. Kingsland, what preparation have you made to testify in this action? A. About a year ago Mr. Cole got in touch with me and submitted to me a resume of the case. I at that time gave it preliminary study and prior to agreeing to participate at all I completed that at the end of, I think it was in February of 1961. I know it was over a year ago. Then I agreed to testify and since that time I have had before me practically all of the papers that have been between the parties in the way of stipulations. I have kept abreast of the case during that period of time and my study included, of course, study of the patent, the file wrapper, study of all of the prior art and a consideration of the accused structure primarily from information that was furnished me and information such [521] as I have heard from Mr. Corsette today. That has been my primary source of information with respect to the accused structure.

Q. Mr. Kingsland, I wonder if you will just very briefly describe to us the Scoggin Patent in suit which is Defendant's Exhibit 10? A. Well, there was a pretty good description of it in the early part of Mr. Fishleigh's testimony with respect to the structure itself. There are some comments, however, that I think may aid in connection with an interpretation of the claims that we are concerned with and I would like to make a few observations in regard

to that so that it will be a background for a consideration of the claim itself, Claim 1.

In the first place, in the specification, the thing that struck me in the beginning was the emphasis that was put upon the value of this overcap. The original objects did not include any reference to the seal between the overcap and the collar or retainer. I understood at the time I studied the patent that that was the issue, that is, the issue was on Claims 1 to 4 of the patent as it existed and, of course, I went back to see whether or not that had been an original purpose of the application or an original object of the application.

Now, of course, there are about four specific [522] objectives stated in the patent itself. The first one was to render the pump inoperable, enclosing a plunger and holding same at the innermost end of its reciprocable path of travel. I noted that. Then came specifically a hold-down cap that may be quickly and easily applied and moved by virtue of a releasable attachment to a part of the entire unit such as by use of screw-threaded interengagement with the part of the unit, and to advantageously employ a part of the unit which has a secondary function of attaching the barrel of the spray pump to the closure cap of the container.

Now, those were the objects that were stated and perusal of those objects indicated that so far as the seal which has become the critical matter that we are discussing here, was not mentioned at all in the objects.

I think that it may be helpful in understanding the specification, or the claims when we come to them to point to another matter in connection with the specification. I think the only reference that I have found in the specification to the clearance between the overcap and the container cap is that that is found in Column 2, line 58 and following. I have a transcript of that made and if the Court desires to follow it, or I will just read it as to what the subject matter included in that portion of the specification is.

[523] The Court: I have the specification. Go ahead.

A. It says, with respect to the clearance of the overcap and container: "A downwardly-facing shoulder 50 within

the cap 40 engages the upper surface of retainer 18, thereby preventing engagement between cap 40 and closure 14 to prevent forcing of the retainer 18 from its tight press-fit engagement with extension 22."

Now, I do not believe it will be necessary to cover those parts unless your Honor would like me to because I think we have already identified them in the testimony.

Q. (By Mr. Conrad) Yes. A. But my point is that as far as I can find that is the sole reference to this clearance between the cap, the overcap and the container cap which has been the critical matter of discussion.

[524] Q. Yes. Well, now, with respect to that reference to clearance is there anything in it about sealing? A. Nothing there at all, at that point. There are some statements later with respect to two seals, and I have those here.

Q. I see. A. Now, there is one other matter that seemed important to me, and that is that additional seal between the rib and the annular surface of the cap adjacent to the shoulder, and we find that statement in column 2, line 67, and following, and the statement there is this: "In addition to the seal provided between the shoulder 50 and the top surface of the retainer 18, there is established an additional annular seal between the annular rib 56 and the annular surface of the cap 40 immediately adjacent to the shoulder 50. This seal is clearly illustrated in Figure 1." Now, I might comment on that, that that will be discussed, of course, when we come to a reading of the claim, but this is what the specification originally said with respect to that association of parts.

Now then, as to the additional seal between the rib and the corner we have this statement, and this is in column 2, line 72 and following. "The cross-sectional contour of rib 56 as shown in Figure 2 is shown to present an upwardly and inwardly inclined annular face which [525] snugly fits against the 'corner' or line of juncture between the shoulder 50 and the adjacent annular inner face of the cap." Now, that is the additional seal that has been discussed here in the evidence. Now, the definition with respect to the shoulder, we have that in column 3, lines 15 and following. "The material from which retainer 18

is produced is soft enough to be slightly compressed when shoulder 50 and the corner adjacent thereto ride along the upwardly and inwardly inclined outer face of the rib 50 when the cap 40 is moved to position." Now, I might comment on that, that the drawing in the Scoggin patent shows that the corner presses out against the—I want to get an illustration of that. No, in the Scoggin drawing of the patent—have you got that here? I thought we had a sheet of that.

Q. No, I don't think so. Do you have a copy of the drawing in your folder there? A. I have it right here.

The Court: Before we get started why don't we take a recess. It is a quarter after three.

(Whereupon, a short recess was taken.)

Q. Mr. Kingsland, you were about to make a comment, I believe, on the drawing of the Scoggin patent. A. Yes. I called attention to the specification where it said that the retainer was of soft material in the Scoggin [526] drawing, and I think it was pointed out by Mr. Fishleigh, in Figure 1 it is apparent that the drawing shows that what is the so-called corner of the shoulder is biased inwardly, which, of course, would be impossible if the retainer were softer than the overcap. I don't think it is of any great significance, but it is a conflict between the actual showing and the specification.

Q. Mr. Kingsland, will you turn your attention to the file history of the Scoggin patent which is Defendant's Exhibit E and comment on the nature of the agreement that was reached between the patentee and the Patent Office in connection with the allowance of the claims in suit? A. Yes. I think reference to this file wrapper is one of the most significant ways of getting at what the real agreement was between the examiner and the applicant resulting in the claims with which we are concerned here. First, to do that, I will have to go back to the beginning of what is revealed by the file wrapper. The first thing that struck me, and does, is the fact that the original application as filed was pointed to this idea that the overcap was the critical thing. In other words, it is perfectly apparent that that was what was thought to be novelty. Now, I think that could be illustrated by taking the first claim

of the application, and I think it is sufficient to [527] illustrate what I have in mind.

Q. That appears on page 7 of the file? A. That appears on page 7 of the file. And it will be noted that it starts out, "In combination with a sprayer unit for a liquid container, said unit including a closure for the container and a spray pump secured to the closure and provided with a reciprocable plunger; and a member holding the plunger at one end of its path of travel and releasably attached to said unit." Comment on that is that that is a combination claim at that point where the critical feature is this hold-down member and the member fits over the plunger and holds it at the end of its path of travel. Now, that—all of the original claims were built around that idea of combination of the spray unit with the plunger and with this overcap as being the critical feature. When that was examined by the Patent Office we find that it was rejected, all claims were rejected on the primary citation or indeed the only citation in the first Office action, which appears on page 12 of the file history. We note there, particularly the statement of the examiner, after saying that the claims were rejected as vague and indefinite in paragraph—in the center of the page—we take the last paragraph starting on page 12 and we have this statement: "Claims 1-11 are further rejected as substantially met by Lohse." [528] Now, Lohse is the patent cited and is the only reference in this action. It is number 2,119,884, and I believe it has here an exhibit number.

Mr. Conrad: That is Plaintiff's Exhibit T, your Honor.

Your Honor, I have here a colored enlargement of a drawing of the Lohse patent, which I would like to mark as Plaintiff's VV.

The Court: What is it?

Mr. Conrad: VV.

(Plaintiff's Exhibit VV marked for identification.)

Mr. Conrad: Your Honor, earlier we put in evidence as Plaintiff's Exhibit Z this form of the Lohse sprayer and the overcap which was marketed some years ago.

A. To continue with the statement of the examiner, "There is shown," in this patent, which is the Lohse patent, "the hold down member 12 releasably secured by screw

threads to a retainer 4 which slidably houses a reciprocable plunger 6. It is not patentably significant in the absence of some new or unexpected result that the Lohse patent does not show the barrel 24 of applicant's device as continuing up to the top of the container since this barrel is part of the pump structure and is [529] not seen to be essential to the essence of the present invention. Note therefore the barrel forming the piston chamber 16 of Lohse as being the full equivalent of applicant's barrel 24. It does not therefore appear to make any patentable difference whether the barrel is attached to the retainer and the plunger reciprocates therein, or is separate from the retainer and the plunger reciprocates through the retainer as seen in Lohse. The clamping nut 5 of Lohse performs the same function of holding the barrel in place as does the barrel extension of applicant's device."

Now, the important part of that is this—of that statement of the examiner. As I read this file wrapper, he never withdrew from that proposition that Lohse, so far as the overcap was concerned and so far as the combination as recited originally in the claim that I read, was not invention, and, of course, the claims were cancelled in the next action.

Q. Now, before you go on, Mr. Kingsland, I wonder if you would tell us briefly how the stated objects of the Lohse patent compare with the stated objects of the Scoggin patent. A. My recollection is that they are practically the same, and I would like to just briefly read—well, Lohse starts out with, "This invention relates to liquid [530] sprayers of the general type used for spraying liquid for various purposes while also making provision for convenient and safe transportation when filled or partly filled with liquid without danger of leakage of the contents. With these objects in view," and so forth. He there designates substantially the same element—I mean the same purpose—

Q. Yes. A. —as was originally stated in the patent in suit.

Q. Colonel, while you are catching your breath there, I would like to read into the record the second paragraph of Lohse, which is as follows:

"With these objects in view the invention comprises a bottle closure removably attachable to a bottle or other container and provided with a movable plunger piston and a liquid chamber, the closure being provided with removable sealing means, which serves both to prevent leakage of the liquid content to the outside and to retain the plunger in a depressed position to avoid the filling of the outlet conduit which forms a hollow stem for the piston." A. That, of course, expresses the same general objective originally expressed in the Scoggin patent.

Q. Yes. A. Now, I think while we are speaking of Lohse, it might [531] be well to point out from this model that this construction, which is one, as I understand, was actually used, was a commercial structure—Lohse screws the container cap directly down on the bottle neck, but he does have what we have referred to as the collar or retainer He has a seal between the overcap and the retainer or collar which consists of a washer, so that in effect he seals at the lower part of the overcap. That was argued later as being a distinction but was never accepted as a full distinction. Otherwise, you have got the container cap, you have got the retainer, and you have got the overcap, you have got the internal threads on the overcap, you have got the external threads on the retainer or collar, then you have got a seal between the overcap and— so that any accumulation of liquid in the overcap can't leak out during the time that the overcap is on. But I think I might comment here, because it's something that is important later, that both in Lohse and another one that we will mention, the Mellon patent, and, of course in Scoggin's, there is not a prevention of leakage into the overcap, but there is a seal between the base of the overcap and the retainer and above the closure cap for the container. So you see in all respects we have generally the same elements, broadly, in this Lohse patent, and as a result, [532] of course, the claims were cancelled, and that appears in the next amendment, which is an amendment that was filed in May 1958, according to this copy, and begins on page 14. There is there submitted a series of claims beginning with claim 16. Here the applicant is getting nearer a reduction of the claim to invention within the area of the closure assembly. It isn't quite stated

as it is later, but he does say in this claim 16, "In a cap for containers having a spray unit supported by the cap, including a reciprocable plunger extending through the cap and provided with a spray head." Then it will be noted that he says, "the improvement of which—" that is, the improvement of a cap for containers— "of which comprises a retainer attaching the unit to the cap and provided with external screw threads; and a hollow member," —which, of course, is the member 40— "for housing the head and maintaining the plunger depressed, said member being screw-threaded on the retainer and provided with a continuous internal shoulder, said retainer having a continuous rib in complemental, circumscribing engagement with the shoulder and disposed to hold the member out of engagement with the cap, whereby to prevent displacement of the retainer from said unit when the member is attached to the retainer."

[533] You will note here again he is trying to get some language that will accentuate the—the cap—but now brings in the idea of a seal, including the rib and the shoulder.

There is just one comment that was made by the applicant which seemed to have some significance.

[534] The Court: Excuse me, Colonel, before you go on with your remarks, would you comment on the fact that this engagement of the rib and the shoulder which is met in the Claim 16 is said to be for the purpose of preventing displacement of the retainer from the unit, when the member is attached to the retainer? A. We find in this specification that the only purpose assigned in the beginning was to keep the overcap from pulling the retainer or collar off because as originally described, this collar or retainer was said to be put on by pressed-fit. My understanding, and as I think Mr. Fishleigh testified yesterday, that the normal commercial practice is to cement or definitely hold that retainer or collar on the barrel of the pump, but the purpose that evidently was in view of the applicant at this stage of the prosecution was that the clearance below was to keep too much pressure to pull the container or ring from its tight-fit engagement with the barrel.

Q. This is the same clearance at the bottom which was later said to be there for the purpose of enabling it to make a tight fit? A. It is the same one, it is the same clearance, of course.

Q. You were about to go on with the remarks in the amendment. A. The applicant here said, on page 15, "Said claims clearly point out the novel features of Applicant's hold-down [535] unit whereby the entire assembly is maintained in a predetermined position as shown in Fig. 1 and where the cap and hold-down assembly are rendered leak-proof by the particular manner in which retainer 18 and hold-down member 40 are inter-engaged."

This is the beginning of the argument of the particular inter-engagement of the hold-down member and the retainer.

I have another part marked that has some significance. Speaking of Lohse, he said, "Clearly, such a provision for the prevention of leakage is not shown by Lohse who attempts to accomplish such results by screwing his hold-down cap 12 tightly against gasket 3 which is held between the cap of the bottle and the hold-down cap for the nozzle. Inasmuch as it is not desired in Applicant's device to have the hold-down member come in contact with the cap of the bottle, for the reasons previously mentioned."

Now, those reasons previously mentioned are to prevent collar from being displaced. "Applicant has devised the new and novel sealing features as are now set forth in Claims 16 and 17. It is to be further noted that a tight seal is further insured by making retainer 18 of a material soft enough to be slightly compressed when shoulder 50 is brought to bear tightly against rib 56." Another emphasis on [536] this press-tight fit between the corner of the shoulder and the rib which is shown as a conical surface, but those claims in the next action, page 18, were rejected.

Q. Mr. Kingsland, I understand at this point in the prosecution just summarize what you have said up to this point, the applicant originally started out claiming the combination of an old overcap and then he was shown Lohse and apparently realized that that broad combination was old, and then pointed out that he distinguished from Lohse by the fact that Lohse had the seal at the

bottom of the cap, whereas, his seal was up in the cap? A. That is correct.

Q. Will you go on from there, please? A. Well, the next action of the Patent Office appears on page 18 of this file history, in which two other references were cited. It is simply a restatement of the Patent Office's idea that Lohse met broadly the original claims and the claims as modified and narrowed up to this point. I don't find much significance in this particular action because as a result the claim, the two claims were cancelled in the next action on page 19 of the record.

Then we get to a series of claims after cancellation of these Claims 16 and 17, which included Claim 18 down through Claim 24, and we have the applicant contending [537] that he has now reduced the claimed invention so that it is allowable over Lohse and these two references which I didn't consider very significant because later on we find that we have much closer references, but in the remarks on page 22, the applicant said: "All of the previously submitted claims having been cancelled, Claims 18 to 24 inclusive remain for active consideration." Then the applicant goes on to say that they have considered the art and then comes the analysis of Claim 18, which is in this language: "Analyzing Claim 18, it is to be noted that this claim sets forth in approved Jepson form, the novel combination of retainer 18 and hold-down cap member 40 which cooperate to maintain spray head 34 and its associated plunger 26 substantially at the innermost end of its path of travel and at the same time providing a liquid tight seal between spray head 34 and the threaded interengagement of cap 40 with retainer 18. Particular note is directed to the limitations in Claim 18 relative to the provision of means on the retainer and cap member respectively providing a seal below spray head 34 and without the lower peripheral edge of cap member 40 engaging the upper surface of cap 14 on container 12." So the applicant is there urging that when he had claims such as 18, the seal, the nature of the seal, the fact that the seal between the overcap and [538] the ring was in the upper part and above the threads that connected the overcap to the ring. So the application stood until there was an interview between the Examiner and the applicant,

which preceded the next amendment which is found on page 29 of this file wrapper, and I think that is the key to the understanding of what was finally incorporated in the claims that we are concerned with.

Q. Well, turning to 25 and this amendment which you think eventuated in the patent's claim 1. A. He in this amendment after this interview submitted Claim 25, which became Claim 1 of the patent and that is the one that we are mainly concerned with because the Claim 2 is simply a dependent claim.

Now, in this amendment we have as Claim 25 what eventuated into Claim 1 of the patent as it now stands and these remarks reveal to me at least as to what happened. Remember that all claims have been cancelled and Claim 1 of the patent had been inserted and Claim 2 had been inserted by this amendment.

"Applicant wishes to acknowledge with appreciation the interview courteously granted by the Honorable Examiner and the cooperation received in the drafting of allowable claims which thereby place this application in condition for passing to issue.

During the subject interview, the Honorable Examiner [539] cited two additional patents not previously of record in the prosecution of this application and which were believed to be pertinent as to the allowability of Claims 18 and 19, presented in applicant's response of November 1, 1958." He is referring back to that Claim 18. Then he cites the new references. The one of significance is the reference to the Mellon patent. We have a representation of the patent.

Q. That is Plaintiff's Exhibit U. This is an enlargement of Figures 3 and 4 and was marked as Plaintiff's Exhibit KK. A. In this Mellon patent we have the pump and we have the overcap, and we have the overcap arranged with a seal or gasket above the screw threads, which had been one argument that had been made by the applicant as a distinction from Lohse. This patent shows that the seal is above the threads that contact the retainer and the overcap. It happens to be a gasket seal and in the drawing there is no mention, or in the specification, of how far down the cap goes but in the drawing

it happened to be shown as all the way down. There is, however, another Mellon patent which we may refer to a little later that shows that clearance. It is only important that the other Mellon shows it because I consider these Livingstone patents definitely show it, but now we have the situation [540] where we have the claim amended after a substantial rejection of the Claim 18 because that was withdrawn and these new claims were submitted after this discussion with the Examiner and because of the importance, as I see, of these remarks, I am going to read them: "These new patents were carefully studied during the interview and agreement was reached between the Honorable Examiner and applicant's attorney relative to limitations which must be in the claims in order to define novelty over the previously applied disclosure of Lohse when considered in view of the newly cited patents of Mellon and Darley, Jr. It was pointed out that although Mellon does disclose a hold-down cap for liquid spray containers wherein a seal was effected between spray head and screw threads, neither of the patentees disclosed a closure assembly wherein annular segment or rib 56 on retainer 18 and shoulder 50 on cap 40 were disposed in such positions as to cause the lower peripheral edge of cap 40 to be maintained out of contacting relationship with cap 14 when cap 40 was screwed tightly on retainer 18 to cause shoulder 50 to be moved into sealing engagement with rib or segment 56."

Now, the applicant is arguing that the novelty rests in the clearance provided, and that clearance was provided by the stoppage of the downward movement of the overcap, so that the lower marginal edge of the overcap wouldn't come in [541] contact with the bottle cap because he argues further: "Lohse's cap 12 clearly moves into contacting relationship with gasket or washer 3, inasmuch as this is the point of sealing engagement between cap 12 and the cap unit 1 on container A, while in Mellon, it also appears, as best shown in Fig. 3, that cap 28 also engages the margin of bottle 10 defined by the ring surrounding the tubular open top thereof. Thus, the obvious modification of Lohse in view of Mellon would be merely to provide the seal 32 of Mellon within Lohse's cap 12 in a position to engage the upper part of central

headed thread 4, while the lower peripheral margin of the cap remained in tight contacting engagement with either the cap on the container or a circumferentially extending projection on the container tiself."

Now then the applicant repeats this on page 33. It says, "As previously indicated, applicant's construction is advantageous wherein the lower peripheral edge of the hold-down member is maintained out of contacting relationship with the cap on the container to not only assure a tight seal between shoulder 50 and rib or segment 56, but also to prevent the cap from tending to dislodge retainer 18 from extension 22 of barrel 24 during assembly of the unit or upon replacement of cap 40."

Here they come back to the idea that this gap between [542] the lower margin of the retainer cap, of the hold-down cap and the retainer ring is emphasized as the basis of novelty over the prior art brought about by a seal at the top that stops the downward movement.

Then he goes on with respect to Claim 26, which is a dependent claim, which is not involved here, as I understand it.

So there we come to a situation where this file history reveals an effort to get broadly an overcap as a hold-down member seated on a retainer. Lohse denied that possibility. There was another effort to get it on a reargument. Then there was an effort to get it on the theory that Lohse had his seal down below the threads that connected the two members and then came Mellon, and Mellon showed the seal, but on the contention that neither Lohse nor Mellon showed that clearance between the lower margin of the overcap and the container cap to provide for this first feature of preventing the retainer from being displaced as described in the specification, and the second feature that came into the case later of effecting a better seal between the shoulder and the rib, in other words, a pressure seal which I think was characterized by Mr. Fishleigh as a better seal than the seal that is just face to face. Now, that is where it came to, with the entire novelty being predicated upon [543] what I have stated. Now then we come to another situation where even that is final.

Q. I think you want to refer to the Livingstone patent. A. Yes, I have it in mind.

Q. By the way, Mr. Kingsland, I believe you were here when Mr. Scoggin gave his definition of an integrated sprayer or integrated container. A. I heard the phrase.

Q. Do you call this Mellon and Lohse an integrated sprayer? A. Well, it would be integrated in the same sense that this one could be perhaps, but I don't see that we are down to a question of integrated sprayer. I want to emphasize that and before I go to this other, and that is this—well, I will take it up when I consider the claim. What I have in mind is that, backing away from combination claims and coming to this type of claim, and then claiming it as a closure assembly, we are down now to a situation where I don't see any possibility of integration of any type being of any significance.

Q. Well, I think Mr. Scoggin's definition was more in a commercial sense than in a patent sense. A. Possibly so.

Q. While we still have this Mellon disclosure in front of [544] us, I would like to point out that the shoulder 31 is described in column 3, line 20, as an annular shoulder on the cap? A. Yes.

Q. Described in the specification? A. Yes, and that it is a shoulder fitting against a gasket.

[545] Q. Do you have, Mr. Kingsland, Plaintiff's Exhibits H and I, which are the Livingstone patents? A. The Livingstone patents?

Q. Yes. A. I have them both here.

The Court: As I understand, this patent was not before the examiner at the time this application was heard.

Mr. Conrad: That is correct, your Honor.

Q. (By Mr. Conrad) Mr. Kingsland, for your possible use I have taken the plunger out of Exhibit G, which puts it in the condition in which we will photograph it and enter it in evidence as G-1. A. Well, we have—are you ready for me to go ahead?

Q. Yes, sir. A. We have in this Livingstone patent, the '480 patent which was filed March 9, 1953—we have an overcap which fits over a retainer in this particular

view in which there is the channel in the overcap at a place corresponding to the shoulder in the Scoggin patent, and we have on the retainer itself an extension, the top of which impinges against two sides of the "V" shaped channel in the overcap. We have clearance so that when the overcap comes down we have a tight seal at this point, this 38 and 39, forming the seal, and [546] it is a press-tight seal, because it comes up, the tongue comes up and fits into this "V" shaped channel, and it is a press-tight seal of the same type of the Scoggin secondary seal, that is the seal between the corner of the shoulder and the "V" shaped underlying rib in the Scoggin patent.

Q. Well, that is the seal— A. So we have—so far as the sealing arrangement is concerned, we have the identity of structure there, and when we come to look at the claim we will find that the claim can be read on this structure just as well as it can be read on Scoggin, because, my position is—and I think it is justified by the position that was taken by the Patent Office—that Scoggin now is down to claiming a closure assembly, and as I understood from Mr. Fishleigh, and I believe the statement of counsel at noon today, that so far as the pump itself and pump elements, they are not to be considered, and that would be the only way in which these claims could be legitimately read because of the limitation down to the closure assembly, which closure assembly of Livingstone, to my mind, is a full equivalent of the closure assembly of the Scoggin patent.

* * *

[548] Q. Colonel Kingsland, I think the difficulty, if any, would be that it strikes one as sort of incredible that the great United States Patent Office would issue somebody a patent on the basis that they had made the cap skirt short enough so it didn't strike something before the seal was tightened. A. Well, of course, sometimes those cases happen. I have seen it happen where there is an interview with the examiner, and the examiner says, "Well, I don't see much in it, but I haven't a direct reference," and it seemed perhaps that that was where this examiner was, but I think that if the examiner had had Lohse, or either one of them where there is clearance and

where clearance is taught, that undoubtedly it was not allowable. [549] That is my considered opinion about it. It never would have been allowed if Lohse had been available.

Q. Excuse me. You said Lohse; you mean Livingstone? A. Livingstone, Livingstone. I want a correction on that. It is Livingstone I'm thinking of.

* * *

[575] Cross-Examination by Mr. Schmidt.

Q. Mr. Kingsland, at the outset there were one or two statements that you made that I feel certain you did not intend to make and perhaps you would like to have it straightened out. Do you have the Lohse patent before you, a copy of the Lohse patent? A. Yes, I have it here, Mr. Schmidt.

Q. I understood you to say on direct yesterday that Lohse seals between an overcap and a retainer or collar. Did you intend to say that? A. Well, if I said it I overspoke on that, because I do know where Lohse seals. Lohse seals between the upper edge of the—let me look at it to be sure. In Lohse we have a gasket 3, and the cover cap comes down, and the edge, the lower margin of it, contacts the gasket, and the seal is formed at that place. It is below the threads on the interengaging threads on the overcap and what is equivalent to the retainer. That is the place of seal. If I said anything different from that—

Q. I'm not sure I— A. I have not stated the fact from the drawing.

Q. I am not sure I understand you. Are you saying the cap 12 [576] of Lohse seals on the gasket 3? A. There is a seal there.

Q. Yes. And that seal 3 is in turn compressed tightly against the top of the container cap 1? A. That is correct, yes.

Q. And that is not— A. There is another seal, of course, below the retainer cap, which is the normal seal on the container cap seal.

Q. Yes, within the cap. A. Yes.

Q. But you do not mean to say that that is using the cover cap to seal on the collar or on the retainer or on the plug 4? A. No. The seal is against the gasket 3, and the lower margin of the overcap, and that is below the threads that interengage when the overcap comes on the retainer.

Q. Yes. Thank you. A. That was the distinction that was attempted to be argued from the claims that I referred to in the file history.

Q. Now, at the outset of your direct testimony, it was my understanding that insofar as the SS-40 accused device is concerned, that you were going to rely insofar as your opinions were concerned, upon information that had been furnished to you and upon what you had heard from Mr. Corsette. Do you recall that? [577] A. That is correct. I was told—of course, in advance I had had a description of the accused structure as actually marketed.

Q. Now, did you, at any time during the year period that you had up until the date of this trial, obtain any independent information for yourself as to the nature of the accused structure? A. No, I can't say that I did, except as it was told to me. I did examine the commercial structure from time to time.

Q. The Plaintiff's commercial structure? A. In other words, when I got the information it was demonstrated to me with a physical structure as far as I could see it in these small—in these small dimensions.

Q. Yes. And they are rather tiny, are they not? A. Yes.

Q. So far as the human eye can detect? A. Yes.

Q. Now, was that the full extent of the information that you had prior to the trial? A. It is. And I gave a resume of how I understood it this morning.

Q. Yes. Now, does that mean that your opinions are therefore for the most part based upon the interpretation that has been placed upon the nature of the accused structure by Mr. Corsette? [578] A. That's a fair statement.

Q. Did you, prior to trial, have an opportunity to look at the X-ray that was brought into evidence by Plaintiff? A. I looked at them, but, Mr. Schmidt, I am not an X-

ray expert. I am frank to say that my eyesight is not quite as good to see the things that others that know something about it can see.

Q. You were not able to detect anything— A. I happen to have a doctor son who takes X-rays, and he tried to explain them to me, but I gave up.

Q. You were not able to determine anything of value from those X-rays? A. No. I wouldn't attempt to.

Q. In preparing yourself for testifying, did you take into consideration the Cooprider-Corsette patent? A. Mr. Schmidt, I had too much to do. I think I have read that patent but not critically. I was told rather early that the commercial structure was different, and my problem was to compare it with the commercial structure and therefore I didn't clutter my mind with trying to go through the details of that Cooprider patent.

Q. Well, now, you testified at rather great length as to what happened during the prosecution of the patent in suit, and you pointed out what is said in the patent with respect to objections and how those objections related [579] themselves to the prosecution and to the claims that were ultimately allowed. I hand you Defendant's Exhibit 122, which is a file history of the Cooprider-Corsette patent. I appreciate that you have not had an opportunity to study it, but with your long skill and experience I'm sure it won't take long— A. As a matter of fact, I don't think I even looked at this. I did look at the patent.

Q. Very well. A. I was trying to use economy of time, and I just figured it wasn't material and so I didn't bother with it.

Q. But you didn't know whether it was material without having looked at it, did you? A. Beg pardon.

Q. You could not tell whether or not it was material until you looked at it? A. Well, I think you misunderstood me. What I considered was that whatever that patent described, it was not what I was comparing, because I had been told in the beginning that the commercial structure was different, and therefore I gave my attention to trying to get the details of the commercial structure, because the comparison that I was making was the normal com-

parison with the commercial structure and not with some patented disclosure.

* * *

[592] Q. (By Mr. Schmidt) Let's turn to the prior art and I ask you among the references which you discussed and applied, which is your best reference? A. I don't think a best reference can be selected. I think in order perhaps Lohse on the general overall is good, I think Mellon is good, and I certainly think that the Livingstone patents are both good. Other features are shown in some of these other references. This idea of selecting the best reference is only a matter of saying that one of them directly anticipates. If I would say the question of invention, lack of invention, rather than the technical anticipation, I think I would argue it on Lohse plus the Livingstone.

Q. Do you find any full and direct anticipation in any of the prior art? A. The only way that I was able to conclude whether or not there was direct anticipation was to assume a very broad reading of the claim so that it would encompass the accused structure as I then understood it and as I now understand it, in which event the breadth that would have to be given to those claims would be met by either the [593] Livingstone patents or Lohse and one or both of the Mellons.

Q. Let's take Claim 1 now. Is Claim 1 fully anticipated by Lohse? A. With a narrow reading, no.

Q. Do you read it narrowly? A. It has to be read narrowly as I see it because of the limitations that were put in there for the purpose of getting away from references that were almost dead ringers.

Q. It has to be read more narrowly than the original claim? A. In a broad sense.

Q. More narrowly than the original claims that were in the case? A. I think the proper interpretation of Claim 1 is directly met in the Livingstone patents because it is a closure assembly and I think that Livingstone's come closer because they do have the conical surfaces as one of the meeting surfaces that is engaged to form the seal.

Q. Can you take Claim 1 word for word and element for element upon Livingstone or either of the Livingstones? A. Yes, I believe I could. I didn't try it exactly because I didn't think that was a material matter. I don't see—I tell you frankly, I don't see any difference treated as a closure assembly in the relationship between the Scoggin patent on which that claim is [594] predicated and the relationship in the Livingstone patent.

Q. And you are saying that Livingstone is a full and direct anticipation of every element of the Claim 1? A. I would say of the novelty. I consider that claim under the Jepson Rule. I am talking out of all of the components of the pump per se and treating it as a closure assembly, as such, I believe I can read it word for word on the Livingstone patent. I didn't try the experiment frankly, because I thought that it wouldn't make much difference. It certainly lacked novelty under that rule in my opinion.

Q. You are saying if you take enough out of Claim 1, you can read Livingstone? A. Well, I can try it. Do you want me to try it here?

Q. Well, let me ask you first, what is Claim 1? Is it not a combination claim? A. Is it a combination?

Q. Yes. A. You are asking me whether it is a combination claim?

Q. Is it not a combination claim? A. Is it not—it is a Jepson claim.

The Court: What do you mean by that, Colonel?

A. I mean that—oh, you mean by the "Jepson"?

The Court: Yes. What do you mean, "Jepson"?

A. That is a well recognized decision of the Patent Office [595] which the Patent Office follows, and I think I tried to explain it this morning, it means in that type of claim we set up all old elements in what has been referred to here as the introduction. That is set apart as not constituting any novelty in the claimed subject matter, and then you go to what the applicant considers the claim subject which permits an interpretation of the Jepson claim which is referred to as such by the applicant here; you read all structure that is within the introduction as being old, conceded to be old by the form of the claim, and that is the situation we have here.

Now, when Mr. Schmidt asked me if I could read it, I would have to read it, of course, reading out those components which are in the category of old elements as represented to the Patent Office by that form of claim.

[596] Q. That means that you would have to wholly disregard that part of the claim that says, "The combination with said spray unit"? A. That is, as I tried to explain this morning, is the dividing line, but I think that this claim as framed didn't divide at the right place, because it indicates to the Patent Office that at that stage there was novelty in the retainer, which wasn't true. A retainer with the—even with the screw threads on it, was old.

Q. What the retainer— A. So that should have been put in the introduction that we have referred to and that Mr. Fishleigh referred to.

Q. Was the retainer— A. I think we all understand what the effect of a Jepson claim is.

Q. Was the retainer old in its entirety? A. Beg your pardon?

Q. Was the retainer old in its entirety? A. The retainer was old. The retainer certainly was old in its exact position and with the screw threads in Lohse. I think we demonstrated that here yesterday.

Q. In its entirety? A. The retainer was old. It was also old in the pumps that preceded it. Those didn't have the screw threads on them, but Lohse certainly had it. So in drafting that claim, [597] my position would be that if you are going to draft it in the Jepson form for a proper representation to an examiner in the Patent Office, that should have been put before "The combination with," because the fact is that that is where it belongs.

Q. Now, it is your position that the words "The combination with the spray unit" are to be looked upon as meaningless and we are not to say that the latter part of the claim is to be considered in combination with the first portion of the claim? A. That type of claim presents to the Patent Office what the applicant considers as novelty. Now, I say "The combination with" is the form that we use in those Jepson claims and in the prosecution of the case. The attorney called attention to the fact,

which means that the attorney was representing to the Patent Office everything that is in the introduction here is old subject matter, "and what I am now claiming is a closure assembly only."

Q. I appreciate what you say, Colonel, but I don't believe you have answered my question as to whether or not you are saying that this Court shall now wholly disregard everything down to the words "The combination with" as if the first part of the claim were not even there. A. It is not in as a predicate for novelty, not in for a predicate of novelty.

[598] Q. I repeat my question. Shall this Court wholly disregard all of the words prior to "The combination with"? A. Yes, in my judgment.

Q. In spite of the fact that the claim says that all of the material below that is in combination with the elements ahead of that? A. Disregard it in ascertaining whether there is novelty in the claim, because novelty has to be found, under the practice of the Jepson form of claim, has to be found in that part of the claim that is not environment and not introduction. There is a very curious thing about it, if you want to find infringement of a claim, they read in those elements as a part of the claim that has to be found, to find infringement, but they don't consider them from the point of novelty. There is a very distinct difference between considering a Jepson claim as a matter of novelty and as a matter of infringement. I think you know that, Mr. Schmidt.

Q. Isn't that somewhat anomalous? A. I think we all know that, and we were all somewhat puzzled in the early beginning as to what they meant by Jepson.

Q. It is puzzling. A. That is the way I interpret it.

* * *

[599] Mr. Conrad: There is only one thing I would like in the record, your Honor, and I understand Mr. Schmidt is in agreement with this, that is that the commercial production of the SS-40 was made prior to the grant of the Scoggin patent in suit.

Mr. Schmidt: Yes, we understand that to be true.

* * *

[600] Mr. Conrad: Your Honor, I would like to offer in evidence as Plaintiff's Exhibit WW a type of bottle that was used with the closure Exhibit AA, which has already been stipulated.

The Court: Very well. Admitted in evidence. (Plaintiff's Exhibit WW marked for identification and received in evidence.)

Mr. Conrad: I would like to offer as Plaintiff's Exhibit XX the deposition of Anthony J. Ratichek, taken November 20, 1961. There are some passages in there about the use of some of these elements, physical exhibits, we have already put in.

Mr. Schmidt: No objections, your Honor.

The Court: Admitted without objection.

(Plaintiff's Exhibit XX marked for identification and received in evidence.)

Mr. Conrad: And I would like to offer the following portions of the Deposition of Baxter I. Scoggin. Your Honor, I thought what I would do would be ask the reporter to write into the record these excerpts, because they are fairly short and the depositions are rather lengthy. In the April 12, 1960 deposition, page 214, lines 3-19. Now, that, by the way, is a portion of the deposition where Mr. Schmidt [601] tells us what prior art patents were found in the search made before the Scoggin application was filed, and there is apparently an error in the deposition. The last patent mentioned—mentioned in the deposition is 2,587,687, whereas I think we are in agreement that it should be this Mellon patent, 2,586,687.

Mr. Schmidt: I shall be happy to check on that. Yes.

Mr. Conrad: Thank you. I also offer the deposition of Mr. Scoggin, November 17, 1959, page 93, line 20, through page 98, line 2. I would like to point out to the Court, and I think there will be agreement with this from Mr. Schmidt, that in page 97, line 13, the words "operated in" should be "occupies".

I also offer, your Honor, from the same Scoggin deposition, page 47, line 1, through page 52, line 10. Also offer page 125, line 13, through page 127, line 10.

(Which said pages, in the April 12, 1960 deposition of Baxter I. Scoggin, page 214, lines 3-19, November 17, 1959 deposition, page 93, line 20, through page 98, line 3, and also November 17, 1959 deposition, page 47, line 1, through page 52, line 10 and also page 125, line 14, through page 127, line 10, so offered in evidence are in words and figures as follows:)

* * *

[602] Mr. Cole: All right.

I would like to read into the record at this time a list of the numbers of the patents which were located in a preliminary search made on behalf of Cook or Bakan prior to the decision to prepare the Scoggin application.

You gave me this list, didn't you?

Mr. Schmidt: That's the list I gave you the last time?

Mr. Cole: That's right.

Mr. Schmidt: Very well.

Mr. Cole: If you will, just copy these numbers in, please.

(The numbers are as follows: 1,679,305; 2,083,058; 2,096,042; 2,119,884; 2,301,051; 2,568,057; 2,586,687.)

* * *

[603] Q. Mr. Scoggin, if you had no clearance so that when you threaded your cap all the way down the plunger was really in its lowermost position, it's conceivable that you could limit the amount of pressure that you applied to your seal, is it not? I'm talking about the overcap seal. [604] A. That's right. That's the reason I say it will be fairly close, maybe a thirty-second or something like that.

Q. I have found it now. Here is a sectioned Bakan shipper sprayer, and the plunger has been sectioned, too. Now, the cap is screwed down on the retainer. The plunger is in place, and I ask you to note that there is, perhaps, a sixteenth of an inch clearance, that is to say, the plunger with the cap all the way down moves back and forth about a sixteenth of an inch, right? A. Something like that, yes.

Mr. Cole: I ask that this be marked Exhibit 26.

(Thereupon a sprayer was marked for identification by the reporter as Scoggin Exhibit No. 26.)

Mr. Cole: In order that we may let the record show a little more clearly what we're talking about as we discuss this Calmar shipper sprayer, I ask that the reporter mark as Scoggin Exhibit 27 a print headed "Calmar's SS-40 Shipper Sprayer, General Specifications".

(Thereupon a print was marked for identification by the reporter as Scoggin [605] Exhibit No. 27.)

Q. (By Mr. Cole) Will you look at this, Mr. Scoggin. We have just discussed the provision for preventing leakage past the plunger and through the retainer. The plunger in this sketch has been marked "K" to correspond to the plunger in Exhibit 16. I have tried to follow the same marking on through, so that there will be no confusion with this Exhibit 16. The retainer is marked here "G", as in this Exhibit 16. Now, there is a part unmarked, an annular member depending from the spray head, "L", which has a conical circumference at its lower end, and as the plunger is moved down to its lower position, that seats between the plunger, "K" and the collar, "G", and blocks the drainage of fluid past the plunger, is that right? A. I'd say it could.

Q. Well, I can assure you it does. A. Sometimes it doesn't.

Q. Let's put it this way, it tends to seal at that point? A. Yes, sometimes it does.

Q. You understand this is not an advertisement you're putting out here. And you are familiar, no doubt, with the fact that, as the plunger comes down, there is a probe carried at its lower end, which I am going to [606] mark here "M" as in "Mother", which engages a ball valve, "M", to hold the ball valve on its seat, is that right? A. What is right, now?

Q. You are familiar with the fact— A. (Interrupting) Yes—

Q. (Continuing) —that there is a probe carried by the plunger? A. Yes.

Q. Which, when the plunger is depressed, holds the ball valve on its seat, and resists drainage of liquid past the ball valve? A. Yes.

Q. And, also, the ball closes the probe itself, which is part of the passage running up through the plunger, so that there is another seal there, this probe being soft, of course, you're familiar with that? A. Yes.

Q. So that drainage of liquid up through the normal passage, through the plunger, is resisted by this seal at the ball at the lower end? A. That's right.

Q. And drainage of liquid which flows past the plunger and upwardly into the cap is resisted by this circumferential, by this annular, flange at the lower end of the sprayer head, is that right? [607] A. Yes.

Q. Due to the wedging action as the sprayer head is driven down, correct? A. Yes.

Q. So that it is essential in Calmar's sprayer, in order that these additional blocks to the passage of liquid out of the sprayer proper and into the overcap, be prevented, is that right? A. What did you say?

Q. I said that these seals which have been provided to block the flow of liquid through the inside of the plunger and around the outside of the plunger are effective only when the plunger occupies its lowermost position, right? A. Right.

Q. It has to be forced down? A. (Nodded yes.)

Q. Whereas if your plunger is forced down so that it reaches its lowermost limit, you may not apply pressure at the cap-to-collar seal, is that correct? A. Might not, yes.

Q. You have said that your current Bakan sprayer has no means to prevent leakage into the cap. Is the same true of the sprayer disclosed in your patent in suit? A. Correct.

[608] Q. There is no means to prevent leakage into the cap? A. Correct.

* * *

[609] Q. (By Mr. Cole) Now, I'm returning to you these Exhibits 17 and 18, 17 being the Bakan sprayer and 18

being the Calmar sprayer. These two sprayers, Exhibits 17 and 18, can be disassembled, and I wish you would remove the heads, if you will, and see whether they are interchangeable so that you can put the head of the Bakan sprayer on the Calmar sprayer, and the head of the Calmar sprayer on the Bakan sprayer. A. They're close.

Q. Now, will you remove the plungers. If you have difficulty in getting these back together, I'm sure Mr. Corsette can get them back. Perhaps you'd like to try the plungers in the two barrels. A. They seem to be quite similar.

Q. In other words, the dimensions are essentially the same, taking into consideration the fact that there has to be some allowance for differences in shrinkage in the process of casting? A. That's right, they seem to be very similar.

Q. What differences are there between the two sprayers, now that you have them apart, which would account for the difference in the volume of material discharged on a given stroke? I think you mentioned that a few minutes ago. A. Let me see if I can demonstrate it here. You [610] see the difference in the length that's exposed above the collar?

Q. Yes. A. That gives this (indicating) one a longer —wait a minute, I've got the wrong part in the wrong one here. There's a difference in the way the collar is constructed. We have a longer stroke.

Q. Well, how would the difference in the collar achieve that? A. Well, where they come back to, and the length, the distance that your head comes down on the plunger, and a lot of other things.

Q. There's no essential difference in the length of the plunger, is there? A. No, but there's a difference in the way it fits. See, this one goes all the way down to the collar and the other one doesn't. The head is different, too.

Q. That's the Calmar sprayer that doesn't—in which the head doesn't—move down into engagement with the collar? A. You can see the difference (indicating).

Q. In other words, there is a difference in length in there somewhere? A. Somewhere. See, there's a difference there (indicating).

Q. Yes. It looks as though the plunger in the [611] Bakan sprayer were made a bit longer, doesn't it? A. It looks that way.

Q. Would you mind taking those apart again and— A. (Interrupting) They weren't when we took them apart, but I agreed with you that it looks that way.

Q. Well, perhaps if you took them apart again you could tell what the difference is from the plunger. A. There's no difference in the plunger.

Q. The plungers are the same? A. Right.

Q. There's a shoulder on there perhaps that limits the movement of the plunger, is that correct, an enlarged portion or something of that kind? A. You have something else in this collar.

Q. Oh, I see. You're pointing to the inner annular flange on the Calmar collar? A. Yes.

Q. Which embraces the plunger, in which the plunger fits snugly. And you do not have that inner collar in the Bakan product? A. No.

Q. On the other hand, you have lost the guiding effect of the inner collar, have you not? A. Well, if we had something—I mean I don't [612] know whether you'd say we lost it or we just didn't respect it in the first place.

Q. Will you try interchanging the pistons, which are the flexible, the small flexible, members at the lower ends of the plungers, to see whether the Calmer piston will fit in the Bakan plunger and so on?

Mr. Scoggin, excuse me, did you answer the last question?

A. They are a little different in construction, but they —the plungers seem to be almost identical in some of the dimensions.

Q. In other words, the piston of the one unit can be inserted in the plunger on the other unit? A. Yes.

Q. In view of these similarities of dimensions of the Calmar and the Bakan sprayers, have you any explanation

as to how that occurred? A. Well, I don't know what explanation is necessary. I mean there's no—

Q. (Interrupting) Surely, Mr. Scoggin, it wasn't purely an accident that these parts are interchangeable. A. Probably not.

[613] Q. And you have no explanation? A. I don't remember why we had made them—let me see this (indicating).

Mr. Conrad: What are you looking for, Mr. Scoggin?

The Witness: One of these here (indicating). This one—

Mr. Schmidt (interrupting): Refer to it by exhibit number.

Q. (By Mr. Cole) Which exhibit is that? A. Exhibit 4. There's a difference in this plunger and the one you submitted.

Q. In what respect? A. There's a difference in dimension.

Q. Which dimension is that that's different? A. There's a difference in the over-all length and there's a difference in the length down to the portion here (indicating).

Mr. Cole: The witness is pointing to what appears to be a shoulder formed between two portions of the plunger of different diameter.

Q. (By Mr. Cole) The plunger, which you have taken from sprayer 4, fits within the barrel, does it not, of the Calmar sprayer? [614] A. I think so, yes.

Q. So that here again we have the interchangeability of the parts and the substantial identity of dimensions of the Bakan and the Calmar sprayers.

Could we perhaps offer as a reason for this similarity of dimensions that Bakan found it convenient to use the dimensions which had been employed by Calmar over the years? A. Well, that might be it. I don't remember why. Of course, Cook wanted something similar to Calmar.

* * *

[615] Q. (By Mr. Cole) At the time your application was filed, Mr. Scoggin, were you aware of the fact that

overcaps or hold-down caps had been proposed for use on sprayers by others than yourself prior to your invention? A. No.

Q. You weren't acquainted with that? A. Not of the type we have.

Q. You are aware of it now, I take it? A. Well, maybe I misunderstood your question there. There were some other types of sprayers where there had been overcaps before but not the type that we [616] have.

Q. Do you mean that overcaps had not been applied to the type of sprayer which had been made by Bakan up to this time, right? A. And were not attached to the retainer, the same kind of retainer as we have here.

Q. Simply because the same kind of retainers had not been used before? A. Well, they had a different structure to what we have here.

Q. The barrel, as I would call it, was down at the bottom of the container and didn't extend up through a closure cap, I mean the container cap, is that correct? A. There was a basic difference between the type of product.

Q. But the type of product to which you applied your cap was the type which had been sold you for many years by Calmar and Marmac, was it not? A. It was similar to that.

Q. It had the collar above the container cap? A. This one has a different type of collar, a collar with screw threads and there was no collar with screw threads on Marmac's or Calmar's.

Q. In other words, you applied your cap to a [617] different kind of pump, is that right? A. Well, to a different kind of retainer.

Q. I think you have already told me that your retainer in your patent performs the same function in holding the container cap in place as does the retainer of the earlier Bakan sprayer? A. That is correct, but it didn't—

Q. (Interrupting) And of the earlier Calmar sprayers? A. That's correct, but they did not have threads.

* * *

[619] Mr. Conrad: Now, your Honor, I offer in evidence all of the exhibits which we previously marked, which are A through YY.

Mr. Schmidt: No objection, your Honor.

The Court: All admitted in evidence.

* * *

[623] Q. I hand you what has been marked as Defendant's Exhibit 124. Will you explain what that is. A. Well, that is a few of the type caps that sprayers are mounted on.

Q. By whom? A. By Cook Chemical.

Q. Are you speaking of cover caps or container caps? A. These are container caps on which the sprayer is mounted.

Q. Now, why do you use so many different types of container caps? A. Well, from the standpoint of Cook Chemical alone, we have a number of different packagings. Some of them are cans, some are bottles, and so forth. From the standpoint of other customers, every customer has some favorite type of cap that he desires the sprayer be mounted on.

Q. What is the significance of that in so far as your business is concerned? A. Well, so far as the—you mean the Scoggin patent?

Q. No, so far as your operations are concerned, what [624] difference does it make that you have so many different types of caps? A. Well, we have to have a sprayer that can be mounted on any type of cap. We have to have flexibility, and so we—

Q. You mean to say that you have to have one sprayer that is universally adapted for use with every one of those caps? A. Yes, sir.

Q. Now, what are the characteristics of the caps that differ one from another? A. Well, first you have metal, and then you have plastic, and almost all the metal caps, as you can see here, are very thin metal, practically as thin and flexible as this glass (indicating), and then the plastic caps are thicker. Some of them have thicker tops where

the sprayer, the extension from the barrel of the sprayer, has to extend up through. Some of these plastic caps are thin at the top, some are thick. Also, the surface of these caps varies. Some of them have a scallop on there, and some of them have rounding, and you can see from the cross-sections that they are not too uniform.

Q. What is the significance of that, in so far as you are concerned, in coming up with your invention covering the cover cap assembly, overcap assembly? [625] A. Well, with the overcap these wide variations in the container cap is the main reason, one of the principal reasons, that it is impossible to plan to seal on an overcap against a container cap. There are too many variations in the tops of the container caps, so you have to plan to seal someplace besides the top of the container cap.

Q. Are you saying that it would have been impossible for you to have brought the cover cap down into engagement with the container cap and effected a seal? A. Well, I wouldn't say anything is impossible, but we tried this and we had very bad luck. I think Exhibit 9 in my deposition—could we have that? It's 7 or 9. It might be 7—7 or 9. It's a cap.

Q. Is that the one you had in mind? A. No, those were some of the earlier ones we tried. It's a white, clear polyethylene cap, square cornered.

The Court: Gentlemen, of what is this testimony in rebuttal?

Mr. Schmidt: This relates to the reason why Mr. Scoggin was forced to move away from the ideas of the prior art as to how to establish a seal. For example, in Lohse we have sealing on the cover cap. In Mellon we have an attempt to use the cover cap on the container itself.
[626] A. This particular cap here—of course, it has been placed on a sample and I shipped it around the country. There was a number of these, several cases of the material shipped to get full shipping conditions, and this particular cap had a little ridge on the inside of this cap, and there was an attempt—you can see how this cap, which was once cylindrical, has been spread at the bottom. There was an attempt to seal that way on top of a container cap,

a metal container cap. We thought at first we weren't putting enough pressure, maybe we could get it, but this one shows the distortion after we put enough pressure, all the pressure we could, to seal on the top cap. And nevertheless, it still would leak. Primarily one of the reasons that this—we found that one of the reasons that this is almost always true, particularly with metal caps, is when you screw the metal cap down against the bottle the metal is thin, particularly after you take the—cut the center of it out to put the sprayer in, it's real thin, and it distorts so much that you can't seal on it. Likewise, with plastic caps we have variations inside so that the surfaces can't always be parallel. They will be off and couldn't be sealed on.

(Defendant's Exhibit 210 marked for identification.)

[627] Mr. Schmidt: I offer in evidence Defendant's Exhibit 124, and I have marked Scoggin deposition Number 9 as Defendant's Exhibit 210, and I offer it in evidence.

The Court: Very well. Admitted in evidence.

* * *

---

[628] CLARENCE T. FISHLEIGH,

recalled as a witness on behalf of the defendant in rebuttal, testified as follows:

Direct Examination by Mr. Schmidt.

Q. Mr. Fishleigh, you recall the Court's inquiry this morning with respect to the significance of the space between the overcap and the cover cap in the Scoggin patent, do you not? A. Yes, sir.

Q. Now, in the record at page 474, in the direct testimony of Colonel Kingsland, at line 14, reference is made by the Colonel to page 18 of the file history of the patent in suit. Do you have that exhibit? A. Yes, I have that here.

Q. Colonel Kingsland points out that "it is simply a restatement of the Patent Office's idea that Lohse met

broadly the original claims and the claims as modified [629] and narrowed up to this point. I don't find much significance in this particular action because as a result the claim, the two claims were cancelled in the next action on page 19 of the record."

Additionally, on page 486 of the record, counsel said this to Colonel Kingsland: "Colonel Kingsland, I think the difficulty, if any, would be that it strikes one as sort of incredible that the great United States Patent Office would issue somebody a patent on the basis that they had made the cap skirt short enough so it didn't strike something before the seal was tightened." Colonel Kingsland responded on line 18: "Well, of course, sometimes those cases happen. I have seen it happen where there is an interview with the examiner, and the examiner says, 'Well, I don't see much in it, but I haven't a direct reference,'" Now, do you agree with the conclusion that the Patent Office had no direct reference relating to this matter of the space? A. No, I do not. In fact, I was quite surprised that in going through the file wrapper that no mention was made other than just a passing one to the fact that there was a Slade reference 2,844,290, and a Nilson reference, 2,118,222, because particularly in view of the emphasis that has been placed on the Livingstone patents here in this court, I think it is of more than passing [630] significance that the Examiner had before him at the time of this paper No. 5 rather early in the prosecution two patents which in my judgment show exactly the thing which has been emphasized here for Livingstone and which make Livingstone merely cumulative instead of being something that was of tremendous importance as covering a subject which had not been before the Examiner.

Referring to the Slade Patent 2,844,290, in Figure 2 there is shown a plastic pouring spout marked generally as 16, and I call attention to the fact that in Livingstone the basic structure that was being worked with was a pouring spout.

Q. In other words, you are pointing out that this Livingstone, as well as in Slade, as cited by the Patent Office, we are dealing with a plastic pouring spout and

the cover for such a pouring spout? A. Yes, the coincidence that in both of the patents the basic structure happened to be a pouring spout.

Q. Now, does the citation of the Livingstone patents in this litigation add anything to the record with respect to the idea of utilizing a space or having a space between the cover cap and the container cup? A. No. As I was about to point out, there is in Slade a collar cap marked generally as 17, having internal screw threads which are threaded upon the external [631] screw spreader on the spout 16, a seal is formed between that cover cap through a gasket in the top of the pouring spout and as clearly shown in Figure 2, there is a space below that cover cap so that there would be no interference with the action of the cover cap coming down to form its seal. To that extent it is my judgment that that is merely cumulative or I could use Mr. Corsette's term of redundant and in this instance use it precisely in its common meaning; that is something that is merely a repetition of what was already there.

Q. Now, you are speaking of the Livingstone patent as being redundant? A. Yes, in view of the fact that the Examiner at this early stage had Slade before him.

Q. Now, in view of that, what is your conclusion with respect to the question of whether or not the Examiner did or did not allow the claims here in issue on the basis that they were novel because of providing a space between the cover cap and the container cap? A. Well, I don't believe that was yet, that no doubt is certainly one of the features which was added and which, of course, has to be considered, but it is equally inconceivable to me that the Patent Office would have granted a patent on that one feature itself, but instead [632] of assuming that the Patent Office was completely wrong in so doing, I think it is much more sensible to look at the entire structure and see that there was in this Scoggin device something far and away above the one single feature of the space below the cap, although that was an important feature to have there.

Q. Will you refer to page 18 of the file history of the patent here in suit and tell us whether you find anything therein contained which leads you to believe that the

Examiner did in fact consider the space between the two caps? A. Yes, about the middle of the page, the sentence begins, "To provide the Lohse device with a rib or stop surface on the retainer 4 to cooperate with an interengagement, a shoulder and surface on the inside of the cap to prevent the cap from seating on the container cap is a feature shown in the art as shown by Slade or Nilson."

Q. Then, contrary to the position taken by counsel, it would be incredible to believe that the Examiner allowed the claim because they differentiated over the prior art in the provision of the space, do you agree? A. That is my view of it, yes, sir.

Q. Let's go one step farther and look into this question of Livingstone showing a seal that is alleged to be a new showing so far as this record is concerned. What did the [633] patent have before it concerning seals? A. Well, particularly it had at that time the Darley Patent 1,447,712.

Q. Now, what is there in Darley that is significant from the standpoint of the Examiner as he prosecuted the patent in suit? A. Well, looking in Figure 2, it can be seen that in this device there is a cap member, an overcap member 26, which has a conical sealing surface on its inner upper surface and as the cap is screwed down upon the member 13, that conical surface comes in seating contact with an upper conical surface on that member 13 and thereby provides a sealing engagement. In other words, there are two conical surfaces which when brought together produce a seating seal.

Q. What is your conclusion with respect to the question of whether or not the Examiner determined the claims to be allowable because of a particular type of seal? A. I don't feel that that can be it any more than the matter of the space in and of itself. That was one factor of several which entered into the structure which was defined by the claim elements which were finally allowed.

Q. What is your conclusion with respect to the equivalency of the showing insofar as the sealing is concerned [634] when comparing Darley with Livingstone? A. Well, again I can say that as far as the sealing feature alone is concerned that in my opinion Livingstone is

merely redundant or cumulative in view of the art that was before the Examiner and cited in the file wrapper.

Q. So in all respects insofar as Livingstone is concerned and the features of Livingstone relied upon by the plaintiff, do you find that those features were before the Examiner in other art at the time the case was being prosecuted? A. Yes, I do.

Q. What do you have to say with respect to two additional references relied upon by the plaintiff, namely the British patent No. 737,210 and Hothersall No. 1,714,874? A. Well, looking at the British patent, 737,210, and comparing it with Darley, they appear to be strikingly similar, differing only in the particular angle at which the mechanical surface, conical sealing surfaces are placed.

Q. You are speaking of which patent? A. I was speaking of the British patent and referring then to that, of course, that sealing surface is shown at 10, on Figure 2 of the British patent, and it is merely a matter of the conical surface on the cap mating with a conical surface on the spout of the container in the same [635] general way but slightly different angle than shown in Darley, Figure 2.

Q. Have you drawn any conclusions with respect to the cumulative effect or the redundancy of the British patent and the Hothersall patent when it is kept in mind that Darley was before the Examiner? A. Well, yes, I have. I believe that, generally speaking, the British patent and Hothersall show nothing of importance beyond what was shown by Darley in regard to seating, although there is some difference in the detail of the two structures.

Q. There is one more prior patent relied upon by the plaintiff for a feature that was allegedly not considered by the Examiner and that is Mellon '839. Do you recall, Mr. Fishleigh, it was pointed out that Mellon '839 like Livingstone presents the idea of leaving the space? What is your conclusion as to the pertinency of Mellon in this litigation? A. Well, I don't see anything significant about Mellon in that regard beyond what was known to the Examiner in the Slade patent.

Q. Now, in final conclusion do you agree with the statement that had the Examiner had before him or in

the prosecution of the patent in suit the Livingstone patent or the Mellon patent '839, he would not have issued the claim [636] here in issue? A. I definitely disagree for I see that there is nothing of importance or significance added to the situation by the Livingstone patents that was not already added by Slade or the other prior art file wrapper references.

Q. And do you recall, Mr. Fishleigh, the statement made by Mr. Kingsland to the effect that the retainer of the Scoggin patent in suit was fully and clearly old in the prior art? A. I recall something of that sort.

Q. Do you agree with that conclusion? A. No, I do not.

Q. Will you outline the functions of the retainer of the Scoggin patent in suit, please? A. I have noted three particular functions of the retainer in the Scoggin patent. The first is that the retainer is a part of a support for the barrel and plunger of the sprayer. Second, that the retainer is the anchor for the hold-down cap, and, third, the retainer provides a sealing element against leakage. Now, I have made an analysis of those three functions of the retainer against the prior art relied on by the defendant, or by the plaintiff, rather, and the file wrapper references and I find nowhere is there any patent which provides all three of those functions in any given retainer.

[637] Q. The Court made inquiry also as to whether or not the invention of Scoggin was within a crowded art. What is your conclusion with respect to the question of whether or not the prior art which Scoggin fixed during the prosecution of his application was or was not crowded? A. Well, considering it purely in the light of the patent showing, there have been a number of patents shown here, so that patentwise one could perhaps say that it was a reasonably crowded art but considering it from the standpoint of the accomplishment of the device of the Scoggin patent and what it was useful for and what it has proven commercially successful in doing, from that standpoint I would say that it was not crowded art. It was a relatively broad gauge new accomplishment which, as the testimony here has indicated, was something that had been sought for a long time but without success.

Q. Would you say that the art was crowded insofar as submitting or presenting an answer or solution to the problem that has been brought before the Court during this litigation? A. I would say it was definitely not. There were a considerable number of instances of some of the elements which go to make up the Scoggin device, but nowhere the combination functioning in a way to produce the desirable result which has resulted in the millions of integrated [638] shipper-seller type spray which have been put out under the Scoggin patent.

Q. In view of your position that the Scoggin invention did in fact solve a problem within an art, having many suggestions incapable of solving the problem, will you answer the Court's inquiry concerning the question of whether or not the claims here in issue should be strictly construed? A. I don't believe they should by any means be construed strictly enough to be limited to the precise detail shown in the drawings and described in the specification of the Scoggin patent. That is a most unusual situation, one seldom sees that, and I don't believe that should be followed in this case by any manner of means.

Q. Now, on page 481 of the record again during the direct examination of Colonel Kingsland, the question came up as to whether or not Mellon and Lohse can be called an integrated sprayer, and in response Colonel Kingsland said, at line 16: "What I have in mind is that, backing away from combination claims and coming to this type of claim, and then claiming it as a closure assembly, we are down now to a situation where I don't see any possibility of integration of any type being of any significance." Do you agreed with that opinion? A. No, certainly not.

[639] Q. Have you studied the Scoggin disclosure and come to any conclusion as to what the Scoggin invention is? A. I have given some thought to it after hearing some of the testimony here and I have set down what in my opinion is the accomplishment of the Scoggin device. I have put it down in writing so that I could give it without the danger of inadvertently omitting any of the items which I had thought were important.

Q. It would be well for you to read that into the record, and the remarks that you have written down will be

an exhibit. A. "The Scoggin Invention. The first commercially successful, inexpensive integrated shipping closure pump unit which permitted automated assembly with a container of household insecticide or similar liquids to produce a practical, ready-to-use package which could be shipped without external leakage and which was so organized that the pump unit with its hold-down cap could be itself assembled and sealed and then later assembled and sealed on the container without breaking the first seal."

(Defendant's Exhibit 222 marked for identification.)

Mr. Schmidt: The statement which the witness has just read into evidence of the Scoggin invention has been marked as Defendant's Exhibit 222 and I offer it in evidence. Do you have any objection to the exhibit?

[640] Mr. Conrad: No, Mr. Schmidt.

The Court: Admitted without objection.

(Defendant's Exhibit 222 received in evidence.)

Q. (By Mr. Schmidt) Now, Mr. Fishleigh, you were in Court, were you not, during the testimony of Mr. Corsette with respect to his criticism of certain models and exhibits concerning which you testified in illustration of the SS-40, the accused device in suit? A. Yes, I was present and heard him.

Q. Do you agree that his criticism is well taken? A. No, I do not.

Q. What do you have now to illustrate insofar as exhibits are concerned that the photographs and the models, samples of the SS-40 clearly depict what the device is? A. Well, we had anticipated that when these models were first made that someone might criticize the models by theorizing as Mr. Corsette did. In fact, we had some curiosity about it ourselves, so to find out whether there was some distortion, we at that time ran an additional sample which I have here and which is marked as Defendant's Exhibit 212.

Mr. Conrad: Your Honor, I object to this. That is improper rebuttal.

The Court: Yes, it is, gentlemen. We are going to hold this strictly to rebuttal testimony. I am not going [641]

to get into any new exhibits unless they have some definite relevancy to what has already taken place.

Q. (By Mr. Schmidt) Mr. Fishleigh, with respect to the Corsette criticism concerning the photographs and models of the SS-40, what is your answer having to do with the fact that those pictures do not properly illustrate the shape, configuration and disposition of the cuts? A. That criticism is not well taken because the models do not reflect distortion and that particular point as to the positioning of the so-called sealing ring, that was determined before we ran the original tests and took the photographs and I have since, after hearing this testimony, run some measurements on other caps in a different way.

Mr. Conrad: Now, if your Honor please, I think the witness is going beyond the ruling. If he opens it up, naturally we want to cross examine. This is explanatory of material which was available to him on the direct testimony.

The Court: What I think, Mr. Conrad, he has a right to probably answer the testimony of Mr. Corsette in connection with the distortion. I do not want to go beyond that. I think he has a right to do that. Overruled.

Mr. Schmidt: May I have a ruling as to whether or [642] not he may testify as to what he knew prior to this direct testimony?

The Court: Only insofar as it indicates any impeachment of the testimony of the prior witness.

Mr. Schmidt: We are not going to go beyond that.

The Court: Any exclamation as he testified in the original testimony with respect to the testimony of Mr. Corsette. Go ahead.

A. Well, we knew when we presented them that they did not show distortions particularly insofar as the important point of the positioning of the sealing ring, and since have run other tests, made other measurements which substantiate the fact that the sealing ring on the cover cap and the ridge which we have marked 80 or, rather, the groove, shall I say, which is marked 88 on the drawing on Defendant's Exhibit 120 are not in fact parallel, do not have parallel cylindrical sides but are substantially as

shown in the four drawings at the bottom right of 120, differing therefrom in degree as would be expected from any number of samples from a given mold or different cavities in a given mold but not in kind, and as to the general theory of distortion, referring to the two caps that Mr. Corsette presented, he referred to the question of the similarity of a hoop. Now, with a hoop, depending on how it is made, as with [643] this cap, depending on how it is made, there are three possibilities when you cut out a section. One is that the structure will spread out and expand. The other is that it may contract, depending on how it has been made, and the other, the last one is that if there are no stresses which are relieved, the structure may remain precisely as it was, particularly if only part of them are here, and I call attention to the fact that in the models which Mr. Corsette presented, what happened was that when the quadrant was cut out, the balance of it contracted rather than expanded, and it is equally probable that that would have happened with one such as we have here in these models, so that I have rechecked, I satisfied myself before we presented them that they were accurate and I have rechecked further and stand on the position that by my own checking and measurements and testing of samples that these are representative of these samples.

Now, of course, if there are differences in their production, that is possible, but these were commercial structures that were shown. [644] Now, one further thing that I should like to point out, that if, in fact, the two parts came together with cylindrical surfaces mating, as was suggested, there would be no reason for any distortion of those surfaces or those parts in sealing. Only if they are at an angle and were pressed further would there be a tendency to take on any permanent distortion. And as a last check as to whether or not those surfaces are strictly cylindrical or whether they are as depicted in these four drawings, I have very carefully checked over samples to see what happens when you put them together without the screw threads, and I find that they do come together with a wedge action. One can feel it, in fact by just putting them together relatively lightly they will hold a considerable weight. So that by these four or five different approaches

they all prove consistent and all prove that these drawings and models are reasonably accurate.

Q. Now, only one more question along this line: What is your conclusion concerning the contention by Mr. Corsette that the lips or rings do not bottom in the grooves as between the cover cap and the collar? A. Well, Mr. Corsette, if I understood him correctly, agreed that at least the so-called feather ring or feather edge at the bottom of the part which we have numbered 90, bottoms, and whether or not we have a contact as shown in [645] stage 2 which provides a sealing engagement.

Q. Now, back to the prior art for a moment, Mr. Fishleigh. Have you prepared any chart or any representation of how you approached the prior art and how you analyzed it? A. Well, yes. I have made a study to determine whether or not the mechanical elements of the claims of the Scoggin patent find a response in the various prior art structures, and I have prepared a chart which indicates, by a series of yeses and noes what my conclusions in that regard are.

* * *

Q. (By Mr. Schmidt) Will you produce the chart, please?

(Defendant's Exhibit 224 marked for identification.)

Q. Mr. Fishleigh, I do not now want to go deeply into what you have illustrated. I think it speaks for itself. But will you just point out what it is and how you approached the matter? A. The left-hand side of the chart is a reproduction of the [646] claim block previously considered. Across the top I have set down in a number of columns, first, the prior art relied on, and that is a mistake because of the confusion of the declaratory judgment case. If I may change that and say, "relied on by plaintiff".

Q. Will you change all copies at a later time, please? A. Yes, I will.

Q. Thank you. A. The next group are file wrapper references, and then two which were set up as Others, I believe in the notice or somewhere before they came to me, and I have indicated opposite each element whether or not in my opinion that element finds a full and com-

plete response in the prior art structure named at the top of the column. The chart indicates that with the exception of the Cooprider patent, which was set up in there for some reason or other, although it does appear to be prior art, that there is no patent listed on that chart which provides a full response for all of the elements of the claims in suit.

Mr. Schmidt: I offer in evidence Defendant's Exhibit 224.

The Court: Admitted in evidence.

(Defendant's Exhibit 224 received in evidence.)

Q. (By Mr. Schmidt) Mr. Fishleigh, one last question. Have you read claim 1 of the file history of the [647] Cooprider-Corsette patent on the Bakan 2 device to determine whether or not it reads thereon? A. Yes, I have done that.

Q. And what is your conclusion? A. It does find a response for each of the mechanical elements there defined in the Bakan 2 structure.

Mr. Schmidt: No further questions.

Cross-Examination by Mr. Conrad.

Q. Mr. Fishleigh, did you tell me earlier that you were not registered to practice before the Patent Office? A. Well, I don't specifically recall whether I told you, but that is the fact.

Q. Did you also say you are not a practicing lawyer? A. That is correct. That is, I am not presently practicing. I am admitted to practice in two States.

Q. Yes. Now, what is your experience, if any, in the actual manufacture or design of spray units such as we are involved with here? A. The what?

Q. Your experience in the manufacture or design of spraying units such as we are involved with here? A. I have never been employed in a factory that was manufacturing those particular units as a full-time job. My experience has been purely in a consulting capacity in this [648] case and some other instances where I was involved in somewhat similar spraying equipment and aerosols.

Q. I see. Now, you say "this factory"—your answer which mentions the factory work indicated that you may have done part-time work in a factory.

Mr. Schmidt: If your Honor please, I believe this is improper. The qualifications of the witness were not questioned during his direct testimony.

The Court: Well, I think that is—the objection is sustained. We have heard him. Go ahead.

Q. (By Mr. Conrad) Mr. Fishleigh, do I recall that you did not participate in the preparation of the models 102-108 that you have alongside of you there? A. I didn't personally do them. They were done at my instigation and under my suggestions, but I did not personally prepare them.

Q. Were you on the premises when the commercial structures were taken and cut pieces— A. Not in that instance, no, sir. I have been on some others that were cut, but not on these.

Q. Now, our time is running out here, Mr. Fishleigh, and rather than dealing with all the remarks you made about the prior art, I thought we would just talk about the Slade patent, which I understood you to say was, as far as disclosure relevant to Scoggin is concerned, was about [649] equivalent to the Livingstone '480 patent. A. Well, I don't think that is exactly what I said. I said that insofar as showing a space is concerned, which was the point that was stressed as being the critical point of Livingstone, that in that respect I thought Slade showed just as well as the other.

Q. I see. Now, do you regard Slade as good a reference against the Scoggin patent as is Livingstone? A. In the light of the other references that were cited by the examiner in the file wrapper and even including those here, I think I would say yes.

Q. I see. Well, now, do you have the Slade patent before you? A. Yes.

Q. You notice, don't you, that in Slade there is no depressable dispensing member that extends up above the—up above the collar? A. That is correct.

Q. This is, however—there is, however, such a member in both the Scoggin patent and in the Livingstone patent? A. That is correct.

Q. Now, you also notice, do you not, that the seal in the Slade patent is not made by a shoulder which is located between two diameters in the overcap? A. That is correct.

Q. But that is the case in both Livingstone and in the Scoggin patent? A. That is correct.

[650] Q. Now, about this matter of whether or not we are dealing with a crowded art. I want to read to you a comment made by defendant's counsel in his pretrial brief and ask if you agree with it. This is the defendant's statement: "The weight to be given defendant's success is increased by the fact that it was achieved in an old and crowded art." Now, do you agree that we are dealing here with an old and crowded art? A. In that sense I do, certainly.

Q. And there is some other sense in which you don't? A. Well, I thought I explained previously that there were a lot of parts here but that the accomplishment of this, as it has shown up here and as I have listened to the testimony, sets it apart from the others into a field pretty much of its own.

* * *

---

[658] DEPOSITION OF RICHARD HIGH,

a witness called by and on behalf of the Plaintiff, having been duly sworn by the Notary, deposed and said as follows:

Direct Examination by Mr. Cole.

Q.1. Will the witness state his full name and address? A. Richard High, Diamond Road in Cumberland, Rhode Island.

Q.2. What is your nationality? A. I am a citizen of the United States.

Q.3. Of the United States? A. That is right.

Q.4. What is your present occupation? A. Vice-President of the T. J. Holmes Company.

Q.5. How long have you held that office? A. I am not too sure about that now. I would say since about 1954. Probably before that, but to make sure I will say 1954.

Q.6. Where is the T. J. Holmes Company located? A. In Chartley, Massachusetts.

Q.7. Now I show you a patent to Lohse, 2,119,884, and ask if you have seen that before? A. I have, yes. [659] Q.8. Approximately when did you first see that? A. It probably was in 1937 or 1938.

Q.9. Shortly after the issuance, then? A. I believe so, yes.

Q.10. It is my understanding that you were concerned at about that time, or shortly after or shortly before, with the manufacture of devices according to this patent; is that correct? A. That is correct, yes.

Q.11. Will you refer to Fig. 2, please, and note the general arrangement of the device and tell me what it is? A. It is a pump device, with the cylinder, which is inside the bottle, and has a tube going out into the spray head. The unit is mounted on the bottle closer cap by means of a nut, and the top has a spray nozzle. Then the top is pressed down and released. When it is pressed down and released, it pulls up liquid and exhausts it through the spray nozzle.

Q.12. In the form of a spray? A. In the form of a spray, yes. The special feature on this is that there is an over-cap which has an internal thread, and which can be screwed on the external thread.

Q.13. You can refer to the patent number there. The patent [660] drawing has numbers. A. I refer to 4-a. The over-cap serves the purpose to hold the top of the unit down, and at the same time seals the unit to prevent leakage. Under the skirt or the rim of the over-cap, the lower end of the over-cap rests upon a gasket which makes the seal.

Q.14. Now, you have brought with you some samples, Mr. High? A. Yes, I have.

Q.15. In response to the subpoena which was served? A. Yes.

Q.16. Will you take the sample which has an over-cap on it, and compare it, if you will, with that drawing, Fig. 2, in the patent, and tell me if it conforms with it or if there are any differences? A. No, I believe it is essentially the same.

By Mr. Cole: I ask that the sample which the witness has just observed, be marked High Deposition Exhibit No. 125.

(High Deposition Exhibit No. 125 as above described, was then so marked for Identification.)

By Mr. Cole: Will the Notary please mark the Lohse patent No. 2,119,884 as High Deposition Exhibit No. 126?

(High Deposition Exhibit No. 126 as above described, was then so marked for identification.)

[661] Q.17. (By Mr. Cole) When did you first see a device of this kind having an over-cap, and constructed in accordance with this High Deposition Exhibit No. 125? A. I can say that I saw this the first time in the fall of 1937.

Q.18. What part did you play in connection with the manufacture or sale of those devices? A. I had nothing to do with the sale. I was making the payroll at the time. I was order chaser, and by making the payroll I handled all parts, because we had to weigh them up. People were working for piece rates, because it was piece rate work, and they completed so many at the counter and we would weigh it up and figure out the payroll.

Q.19. Over what period were these devices manufactured? A. I believe they were manufactured during 1937 and 1938.

Q.20. And that was done by the T. J. Holmes Company? A. That is right.

* * *

[663] Q.32. Did you play any part in the production of the elements which went into this sprayer, other than making up the payroll? A. No.

Q.33. But you were thoroughly conversant with the sprayer at the time? A. Oh, yes.

Q.34. There is no doubt about that? A. Oh, yes.

Q.35. You saw them at the time? A. Yes.

Q.36. And you are prepared to state that from your own knowledge [664] they were made in 1937 and 1938? A. That is correct.

Q.37. When were they discontinued? A. I believe they were discontinued probably in 1939; maybe the latter part of 1938, or 1939.

Q.38. What was the reason for discontinuing these? A. I believe that the unit for these people was too expensive. I believe it was a price question.

Q.39. A price question? A. Yes.

* * *

[667] Q.63. Do you know what liquid the Kimball Company used it with? A. With their window sprays, window cleaner sprays.

* * *

[669] Q.74. Now what function did this container cap perform, aside from the ones you have mentioned? You have mentioned that it prevented leakage from the sprayer? A. Yes.

Q.75. What other function did it perform, the over-cap? And I think also you mentioned that it held the plunger down? A. It holds the plunger down so the whole unit is [670] shorter. It requires less shipping space.

Q.76. Did you have any difficulty with leakage from these units when the cap was applied in the normal manner; the over-cap, I mean? A. No, we were not shipping them in unfilled bottles, but we didn't have, as I recall it, any complaints from Kimball that they were not performing satisfactorily.

Q.77. Of your own knowledge, do you know what the practice at the Kimball Company was in assembling these devices? A. No, I do not.

Q.78. You sold them simply the pump and the over-cap? A. That is right.

Q.79. And the over-cap was not applied when you sent it to them? A. Pardon me, the over-cap was on it when we shipped them, because the way you see it here, that

is the way we shipped them. Later on, I think the unit was too expensive and I think we took the over-caps off, and let them have this without the over-cap for less money. This is just as I can remember it, after twenty-two years.

Q.80. But when you sent the units out, the over-cap was threaded down, as I understand it, on this threaded collar which appears just above the leather gasket; is that correct? A. That is correct, yes.

Q.81. Did you apply any substantial torque, or was the over-cap [671] loosely applied? A. It was finger-tight.

Q.82. It was sufficient to give you a sealing action here? A. I believe so; I believe it is sufficient now.

* * *

[674] Q.98. About how many of these devices were made, very roughly? A. I think this one order was 12,000 pieces. I believe that was made, at least. Let us say several thousand. I think that is correct.

Q.99. That is according to your personal knowledge? A. Yes, that is right.

Q.100. And that was prior to 1940? A. It was, yes.

* * *

---

[706] DEPOSITION OF ANTHONY J. RATICHECK,

being first duly sworn by the notary public, testified as follows:

Direct Examination by Mr. Cole.

Q. What is your address, Mr. Ratichek? A. My home address?

Q. Yes. A. 23 Fernwood Road, Summit, New Jersey.

Q. What is your occupation? A. I am coordinator of purchases for Richardson-Merrill, Inc.

Q. How long have you been so employed? A. My recollection is four years, or approximately four years, as such.

Q. I see. Well, then, prior to that time, where were you employed? A. I was employed at the J. T. Baker Chemical Company in Phillipsburg, New Jersey, which is a subsidiary of Richardson-Merrill.

Q. In what capacity were you employed by the Baker Company in the years 1950 to '55? A. I can't recall my official title there at that time, during those years, but I had responsibility for the purchasing department and also for the [707] production control department—production control and scheduling. At the time of my last title, however, prior to coming with Richardson-Merrill, I was manager of services operations, which included those departments and also included the materials handling department.

Q. When did you first come with the Baker Company? A. I think it was 1950.

Q. I am informed that the Baker Company makes chemicals of various kinds. It dispenses these chemicals in containers of one sort or another, does it? A. That's right.

Q. And I have asked you to bring with you a container and associated dispenser. Do you have that here, please? A. I do.

Q. Of what material is this container made? A. Polyethylene. To my best recollection, it is polyethylene.

Q. On the container there is a device which is threaded for reception on the neck of the container; is that right? A. That's right.

Q. And of what material is that made? A. Polyethylene.

[708] Q. It appears to have some dispensing provision in connection with it; is that right? A. That's right.

Q. Will you describe generally the function of that spout or dispenser there, if you will? A. Well, the dispenser was used on this bottle which, as I recall, was used primarily for hydrofluoric acid, a solution of hydrofluoric acid, and the dispenser was used for dispensing the hydrofluoric acid.

Q. I see. And it consists of the spout structure in the center there of some kind? A. It consists of this spout structure here.

Q. Yes. A. Together with an outer ring which was used as the sealing ring; put it that way.

Q. I see. Now, may we call that a— A. Pouring spout.

Q. —an integral container cap and pouring spout? A. Not a cap.

Q. It is a container cap in the sense that it threads on the neck of the bottle, is it not? A. That's right, but it is not a cap in the true sense of the word of finishing off, complete [709] enclosing.

Q. I see. Now, then, the device was finished off with this over-cap; is that right? A. With this over-cap, that's right.

Q. Which threads onto the neck of the spout-container cap structure? A. That's right.

Q. Were devices of this kind, which you have just described, used by Baker in the years '52 to '56, let us say? A. Yes, they were.

Q. That was while you were with the Baker Company? A. That's right, to the best of my knowledge and recollection, they were.

Q. That's right.

Mr. Cole: Will the reporter please mark this spout structure Ratichek Deposition Exhibit 130.

(Spout structure marked Ratichek Exhibit 130 for identification.)

Mr. Cole: Please mark this over-cap Ratichek Exhibit 131.

(Over-cap marked Ratichek Exhibit 131 for identification.)

[710] Mr. Cole: Mark this bottle 132.

(Bottle marked Ratichek Exhibit 132 for identification.)

Q. Do I understand, Mr. Ratichek, that the J. T. Baker Company manufactured hydrofluoric acid? A. They manufactured an aqueous solution of hydrofluoric acid.

Q. And that— A. Aqueous—may I amplify that? When I said manufactured, as far as I remember, we may have purchased this as the aqueous solution in bulk and then refilled these bottles with it. I'm not sure that we

were in the manufacture of the aqueous from the anhydrous solution at that time, from the anhydrous hydrofluoride.

Q. When you say these bottles, you mean the bottles of the type of Exhibit 132? A. We filled those with the solution.

Q. You filled these? A. Yes.

Q. That was during the years prior to 1956, was it? A. Yes, sir. To the best of my recollection, it was.

Q. When was this device which is threaded onto [711] the neck of the bottle, such as Exhibit 130, applied? Was that after the filling of the bottle? A. I'm quite sure it was.

Q. In other words, you put the acid in the bottle and then you applied the device 130? A. Yes.

Q. Were devices of the type of Exhibit 130 used prior to 1956 for this purpose? A. My memory would say yes.

Q. And then after the container cap-pouring spout structure was applied, then this over-cap was applied, Exhibit 131; is that correct? A. That's right, sir.

Q. Now, I take it that you had a seal here between this threaded skirt on the pouring spout device, Exhibit 130, and the neck of the bottle; is that correct? A. Yes. There was one there—

Q. Will you show us where that was, sir, remembering that when you point it will not show on the record? A. As I recall, there was a seal exhibited in several places. One was, of course, between the top of the bottle and the lower portion of a skirt inside, and also, of course, the threads themselves act as a [712] seal.

Q. I see. Now, you are referring to the— A. Inner thread and the thread on the bottle.

Q. Yes. And the inner thread is on Exhibit 130; is that correct? A. That's right.

Q. There was a seal effected at that point in much the same manner as was effected with any other container cap? A. Any other container cap.

Q. Yes. Now, will you refer, please, to the over-cap, Exhibit 131, and tell us how that sealed? A. There was seal there. There were actually two seals that I know we

looked at. One was the upper lip of the outer skirt of the pouring spout, Exhibit 130, and the inner ring of the cap on Exhibit 131.

Q. That is the flange which is inside of the over-cap? A. That's right.

Q. Exhibit 131, up inside and above the threads; is that correct? A. That's right, yes. And there was also, of course, some seal between, again—we always had some seal, as a normal cap would have, between the threads [713] of both pieces.

Q. I would question whether the seal effected by the threads would be sufficient to contain the liquid. A. I don't know that we depended on that by itself. We were looking at the seal between the outer skirt and the inner ring of the cap.

Q. Yes. Well, now, perhaps you can clarify the testimony you have just given by reference to this patent, to Livingstone 2,763,402, granted September 18, 1956, and I call your attention to Fig. 4 of that patent, which seems to me to show a structure somewhat similar to that which you have described.

Now, perhaps you can, by looking at the Livingstone patent and referring to the reference characters there, explain where the seal was effected between the over-cap, which I believe bears the numeral 84— A. Is that 97?

Q. 84. A. 84, yes.

Q. —and the pouring spout-container cap structure, which is designated 95.

Can you tell us now where the seal is effected? A. Well, the seal is effected, of course, between— [714] and I don't know if this number 97 has any significance here; I can't see where that goes to. Does that go to the lip of the cap? Is that the lip of the cap, the inner lip of the cap?

Q. It looks to me as though that goes to the inner lip, which is up inside the cap, yes. A. Yes, that is what I think.

Well, the seal is effected between the inner lip, then, if 97 refers to it, of the cap and the lip designated at the top of 95.

Q. I see. In other words, the upper edge of the collar 95 fitted outside of the lip 97 and inside of the over-cap wall proper; is that right? A. 84, yes.

Q. 84. I take it it was necessary, since you were bottling a toxic substance, to have an effective seal on your bottle? A. Yes, it was a highly corrosive substance, in addition, as you may well know.

Q. Was this seal, when properly made, effective for the purpose? A. We used many bottles for this purpose.

Q. Do you have any idea of how many of these pouring spouts and overcaps you used in the years, say, [715] 1952 to '56? A. I would not venture a guess as to the total quantity, but certainly it is a number of thousands.

Q. I see. Perhaps tens of thousands? A. Tens of thousands, I would say.

Q. Do you happen— A. I have made no summarization of the total number of units.

Q. I see. Do you happen to know whether these early devices were made under any of the Livingstone patents? I am not asking your expert opinion on the patent, but simply do you know whether any royalty was paid to Livingstone. A. As far as I remember, yes, there were. In fact, as I recall some of the information, we made this agreement with Livingstone. I'm not too sure whether it was 1950 or '51 or '52—I don't have the records here—but we made an agreement with Livingstone to use these caps under—either he had a patent pending or he was granted a patent at the time, and I recall that we made an agreement with Mr. Livingstone to use these caps.

Q. Did the Baker Company make the device, the spout container cap and the over-cap structure, Exhibits [716] 130 and 131? A. Baker did not manufacture these at that time.

Q. I see. Do you know from whom they purchased these? A. They purchased these from Mr. Livingstone.

Q. Did he make them personally? A. We, of course, had no records as to whether he made them personally, but we understand that he had someone else manufacture them for him.

Q. Now, we are speaking still of the period prior to 1956; is that correct? A. That's right.

Mr. Cole: Will the reporter please mark this patent Exhibit 133.

(Copy of patent No. 2,763,402, dated September 18, 1956, marked Ratichek Exhibit 133 for identification.)

Q. Now, if you will refer again to the patent—'402, let's call it—Exhibit 133, Fig. 4, I think you will see that the container cap 86 and the spout structure 95 are separately formed, and it appears that in Exhibit 130 the container cap, this threaded skirt as the base which is threaded on the neck of the bottle, is integral with the pouring spout structure and with [717] the collar which is threaded to receive the over-cap. Do you know why this Exhibit 130 was made in one piece rather than as shown in Fig. 4? A. I do not.

Q. Do I understand you to say that devices of this type, Exhibits 130 and 131, the spout structure or adapter, as Livingstone calls it, and the over-cap were of this type during the period, say, 1952 to 1956? A. To the best of my recollection, that's right.

Q. Mr. Ratichek, we have had one of these caps which was furnished to us sectioned so that the internal structure can be seen, particularly the sealing structure which engages the lip of the bottle neck and the sealing structure between the over-cap and the collar on which it is threaded.

Will you look at that and see if that is, according to your best recollection, the type of device which was used by Baker in the years preceding 1956? A. As far as I can determine at this point, yes.

Mr. Cole: Will the reporter mark that, please, Exhibit 134. Better make the pouring spout structure 134 and the over-cap 135. We can take [718] them apart.

Mr. Schmidt: They are both sectioned?

Mr. Cole: Yes.

(Section of pouring spout structure marked Ratichek Exhibit 134 for identification.)

(Section of over-cap marked Ratichek Exhibit 135 for identification.)

Q. Take another look, Mr. Ratichek, at Exhibit 130. I think you will find the legend on top of the over-cap—that should be Exhibit 131; the tag has come off, but it

is the over-cap, Exhibit 131—and there is a legend barely discernible on the top. Will you read it, please? A. Well, it has the Baker symbol on it. It also has "Drain back spout" and down below it it has "patent pending."

Q. The over-cap, Exhibit 131, has been applied to the pouring spout, Exhibit 130, by threading it down.

I ask the witness to observe that there is a clearance between the over-cap structure and the skirt of the spout which is threaded onto the container; is that correct? A. That's right.

[719] Q. Do you know what the purpose of that clearance is? A. Well, I would suspect that it is to allow the cap to be fitted down as far as possible onto the pouring spout.

Q. In other words, if you did not tighten that cap down, you might have trouble with leakage; is that correct? A. You might have trouble with leakage because the seal would not be effective. Certainly, if the shoulder of the pouring spout is sufficiently high, you would have obstruction there, you would have a meeting, and then there wouldn't be enough clearance for the pouring spout lip, outer lip, to go up into the cap.

Q. I see. You are talking now about this internal seal? A. Internal seal.

Q. In the over-cap? A. Yes.

* * *

[734] Cross-Examination by Mr. Schmidt.

Q. What is the purpose of the spout, Exhibit 130, Mr. Ratichek? The purpose. A. What is the purpose of the spout?

Q. Yes. [735] A. Well, as far as I know, it was to allow an even flow of the fluid from the bottle.

Q. Is it, as its name implies, a spout to permit pouring of the liquid from the bottle? A. Pouring of the liquid from the bottle.

Q. Would you say that it was used primarily, if not solely for hydrofluoric acid? Is that correct? A. I don't know that I can say solely, but to my recollection this was the only purpose that we used it for. We may have used it for some other items.

Q. Why is there a need for a special type of spout? Is it because of the nature of the chemical being poured from the container? A. I would say that this—to my knowledge, it was because of the nature of the chemical. Acids, in particular, there is great concern about spillage—overspillage—of the acid. We wanted some control of flow, as I recollect.

* * *

[742] Q. But in so far as you know, Exhibit 132, with the structure of Exhibits 130 and 131, in the sale of hydrofluoric acid, was not for the housewife, to be placed on the shelves of a grocery store, for example; is that correct? A. No. I'm quite sure that it was not intended for that sale, but if it got there, it was purely a mistake.

* * *

[744] Q. Now let us assume that some other liquid, say, a liquid detergent, were used in a bottle of that kind. Is there any reason, in your view, why it could not be dispensed through this same pouring spout structure? A. Well, I would say any liquid could be dispensed through it.

Q. For instance, if this bottle were filled with a liquid commonly used in the household, such as Clorox or liquid Ivory, or something of that sort, it could be packaged in precisely this manner and displayed on shelves along with other household products; is that correct? A. Well, as long as the liquid was compatible with the materials of construction, I see no reason [745] why it couldn't be.

Q. Yes, the only thing I am trying to bring out here is that I rather got the implication from Mr. Schmidt's questioning that this structure would not be suitable for other liquids, and you gave an opinion based on his question. I simply want your opinion as to whether there is any significant connection between the liquid and the pouring spout over-cap structure, or is it useful for any purpose. A. I would say that it would be useful for any purpose where liquid is contained and the liquid is compatible with the materials of construction. As far as the design of the cap is concerned, or its use on a bottle, it would appear that it could be used on any liquid.

* * *

[756] DEPOSITION OF ROBERT D. WISE,

having been first duly sworn, deposed and testified as follows:

Direct Examination by Mr. Schmidt.

Q. Please state your full name and address. A. Robert D. Wise, 6936 Crystal Springs Road, Cincinnati 27.

* * *

[763] Mr. Schmidt: Q. Mr. Wise, what is your occupation, please?

A. I am president of Calmar, Inc.

Q. Calmar, Inc. being the plaintiff in this lawsuit. A. Yes.

* * *

[764] Q. What do you mean by the terminology "Calmar Division of The Drackett Company"? A. Perhaps I should explain the corporate relationship. Calmar, Inc. is a wholly-owned subsidiary of The Drackett Company. Its purpose in business is essentially that of a sales and engineering and development corporation. The Calmar Division of The Drackett Company is [765] a manufacturing operation located here in Los Angeles.

Q. Is it also owned by The Drackett Company? A. Yes, it is.

* * *

[769] Q. What is your relationship to the other companies of which we have been speaking? A. I am a vice president of The Drackett Company; I am also a vice president of Plastics, Inc. and vice president of the Marmac Company.

* * *

[782] Q. What do you mean by a shipper sprayer? A. We consider a shipper sprayer as a sprayer that is mounted on a container and becomes in effect an integral part of the package, as compared to sprayers attached to a container, such as the other side of the container.

Q. And by mounted on a sprayer you mean with a part of the sprayer actually protruding into the container? A. Correct.

Q. With the sprayer attached perhaps to the neck of the container? A. Correct.

Q And with that type of construction you usually use the terminology "shipper sprayer"? A. Correct.

Q. Prior to the discussion with Mr. Scoggin in 1955 had there ever been any kind of a shipper sprayer that you knew of? A. I believe the correct answer is "yes."

Q. What was the nature of such sprayer? A. To the best of my knowledge, samples of what we call our SLP sprayer had been distributed to people such as Cook Chemical.

[783] Q. For what purpose? A. Presumably for their evaluation for use as a possible shipper sprayer.

Q. But that particular type of shipper sprayer had not at that early date been commercialized? A. It had not been commercialized to the extent that it was being offered as a standard product.

Q. Do you know the purpose that Cook Chemical Company, through Mr. Scoggin, had in mind for a shipper sprayer? A. I believe that that is obvious. The introduction of sprayers in the insecticide industry, to the best of my knowledge, was done by hanging a sprayer on the side of a bottle or a can. I am confident that there were objections from the trade to this from the viewpoint that the sprayer was probably subjected to a certain amount of pilferage in stores. It would be possible for the sprayer to become damaged either during shipment or during subsequent handling by the trade.

Q. When the sprayer was shipped hanging on the side of the bottle or other container, what was required of the customer after purchasing? I am speaking of insofar as— A. Are you speaking of Mrs. Housewife?

Q. Yes, so far as placing the article in use is concerned. A. She would remove the container cap from the container and then insert the sprayer.

[784] Q. The container cap was an imperforate cap adapted to hold the contents of the container within the container; is that correct? A. Correct.

Q. Then, from what you say, do I understand that Mr. Scoggin had in mind packaging with the sprayer

mounted in the container and elimination of the imperforate cap? A. Very definitely, but I am sure Mr. Scoggin was not the only one who had such a thing in mind.

Q. Do you recall at that time anyone else who was making the same request of you? A. I don't recall specific customers but I do recall talking to many, many people about it. This was a subject of growing interest.

Q. Your answer to his problem, I take it, was the LP-25? A. Correct.

Q. S-25? A. S-25.

Q. S-25-LP? A. Yes.

Q. And you submitted samples of that type of sprayer to Cook Chemical as well as others? A. I believe that we did. I know those samples were submitted prior to my joining the Calmar organization.

Q. To Cook Chemical Company? [785] A. Yes.

Q. What was the reaction of Cook Chemical Company to that subject for their problem? A. Their reaction was not favorable, that I recall it.

Q. Why? A. At that time I believe they found that it was difficult to contain liquid with the S-25-LP samples that had been submitted to them.

Q. Do I understand, by that, that when the S-25-LP sprayer was mounted in the container it would not retain the liquid in shipment? A. I assume that is correct. I don't recall ever having seen or having discussed with Mr. Scoggin or Cook any specific test results that they had had. I do recall that they were not pleased with the samples that they had received. I can't say when the first samples were submitted to Cook Chemical.

Q. But you believe that it was possibly before you took over as president? A. Yes.

Q. And you do recall discussing a sprayer with Mr. Scoggin after you took over as president? A. That is right.

Q. Did Calmar, Inc. ever furnish that particular sprayer to Cook Chemical Company, other than the samples, of course? [786] A. Other than the samples, I don't believe we did, but I can't say definitely.

Mr. Schmidt: I ask the reporter to mark as Defendant's Wise Deposition Exhibit 1 for identification this sprayer.

(The S-25-LP sprayer referred to was marked by the notary as Defendant's Wise Deposition Exhibit 1 for identification and made a part of this record.)

Q. Mr. Wise, I now hand you a sprayer furnished to us this morning, which has been marked for identification as Defendant's Wise Deposition Exhibit 1, and ask you whether or not that is the S-25-LP sprayer about which we have been talking. A. Yes, it is.

Q. What is there about that sprayer that distinguishes it from earlier sprayers and adapts it for use as a shipper sprayer? A. The design, or the configuration, of that sprayer was initially developed by the Calmar Company, presumably because of their feeling that there was a need for a shipper sprayer. In order to contain leakage they designed this particular configuration, which involves the use of two collars having between them a flexible O ring. To the head of this sprayer they incorporated two lugs so that when the head was depressed and locked into the collar [787] assembly it, in turn, depressed the flexible O ring, forcing it against the side of the piston tightly so as to confine liquids within the container. Further, in order to prevent leakage up through the sprayer from the inside, a cap was attached over the orifice disk construction on the head.

* * *

[789] Q. In actual production of sprayers of that nature as represented by Defendant's Exhibit 1, did you find that you were entirely successful so far as percentage of leakage was concerned? A. No, we were not entirely successful insofar as leakage was concerned. We were partially successful.

Q. Where you were unsuccessful what was the cause for it? A. The cause of the unsuccess that we did have in many cases was due primarily to leakage that occurred at two places; one, underneath the container cap. I think [790] that Mr. Scoggin would agree that most sprayers that are sold are sold using what is known as a 400 finish cap. The cap is approximately a quarter inch

high. The amount of thread engagement, because of the shortness of the dome of the cap, is somewhat limited. Consequently, if the flange on the sprayer extends across the extent of the dome of the cap and to that is added on the lower surface underneath the flange a gasket, the combination of the flange and the gasket takes up so much room in the dome of the cap that as a result you have insufficient thread engagement. That did result on several occasions in our having leakage at that point.

* * *

[791] Q. Did you ever rectify the leakage problem between that cap and the container? A. Yes, we did, to the satisfaction of some users.

Q. Referring again to patent Scoggin Exhibit 19, you are referring, are you not, to the cap that is designated by the numeral C in Figures 1 and 2? A. Yes.

Q. And the difficulty arose at the gasket 16 and the inability of the gasket 16 to prevent leakage to the outside of container B? A. I wouldn't say that is quite correct, Mr. Schmidt. It may not be necessarily due to the inability of the gasket to prevent leakage. The leakage may have been due to the fact that because of insufficient thread engagement or the cap not being tight enough the gasket failed to perform the function.

[792] Q. In other words, the threading was not sufficient to hold the gasket 16 sufficiently tight against the upper edge of the neck end of the container B? A. That is correct, if there is insufficient thread engagement or if the container cap had not been tightened adequately to effect a seal between the container neck and the gasket.

Q. You say No. 2 had another leakage problem? A. Yes.

Q. What was that? A. That was leakage that occurred primarily between the O ring, around the piston.

Q. Again referring to the patent Scoggin Deposition 19, you are speaking of the O ring that is designated by the numeral 30 in Figure 2? A. Correct.

Q. Do I understand your previous testimony that, in theory at least, the O ring 30 was compressed tightly between flange 44 as shown in Figure 3 to effect the seal? A. Correct.

Q. But notwithstanding that, you had difficulty in leakage? A. We did have difficulty in leakage because of the special problems that arose.

Q. What do you mean by special problems? A. For example, the O ring that we normally used [793] was made of a flexible vinyl chloride which had a certain amount of compressibility. We discovered that this O ring was subject to chemical attack, for example, in the case of insecticides. The amount of the attack varied with the type of insecticide, the ingredients in the insecticide. On some occasions the O ring would become smaller, harden, would shrink so that, in effect, you were losing the seal at that point because of chemical attack. Now, in this case the leakage was not necessarily due to faulty construction of the sprayer, but was due to chemical incompatibility.

Q. Was the S-25-LP sprayer, as illustrated for example by Exhibit 1, actually made and sold for insecticide purposes? A. Yes, it was.

Q. Do you recall whether or not that type of sprayer was ever sold to Cook Chemical Company, the defendant in this case? A. I don't know, I think perhaps to keep things in a proper context it should be explained that Exhibit 1 refers to the configuration that we are presently manufacturing.

Q. I understand. What I had in mind was a sprayer of that type being sold by Calmar. A. Yes.

Q. For use in insecticide containers? [794] A. Yes.

* * *

Q. I want to know whether or not Calmar, Inc. actually sold a sprayer of this type to customers who used them for insecticide purposes. A. Oh, yes.

Q. To any large extent, or did you go merely slightly beyond the experimental use as you indicated a while ago? A. I would say to a fairly large extent.

Q. Were these customers who purchased that type of sprayer for insecticide uses who complained because of the leakage? A. Yes.

Q. Who were they? A. Those customers were essentially S. C. Johnson and Colgate-Palmolive.

Q. Did they at any time request that you rectify the error? A. I would say quite definitely.

Q. Did you make any attempt to remove the leakage problem for them? A. Certainly.

[795] Q. Did you modify the S-25-LP sprayer in a way that solved the problem? A. Do you mean the S-25-LP sprayer?

Q. Yes. A. We made modifications in the S-25-LP sprayer in an effort to correct and solve leakage problems that developed. We realized that there was a problem of chemical incompatibility, but we did not know the seriousness of the problem.

* * *

[801] Q. Did you attempt to sell boots per se? A. I wouldn't say we actually attempted to sell them; we merely presented the boot as one approach to, frankly, dispenser customers as well as sprayer customers.

Q. You did not tool up for production? A. We did not tool up for production. We did consider, I believe, a four-cavity die which might enable us to run a number of samples to give us some indication of cost cycles and so forth.

Q. Did you ever produce any samples? A. We made samples.

Q. Did you distribute the samples among your customers? A. Yes, I am sure we did.

Q. What was their reaction? A. Well, their reaction was somewhat to be expected, I think. We were offering this as one approach that might be considered at the time that it was offered; not as one that would be considered as the ultimate answer. Most of the people who saw it objected to it on the basis that, number one, this was something additional that they would [802] have to purchase; number two, this would require an additional operation in their plants which they were not performing. They would either have to put it in the container and then insert the sprayer or they would have to put the boot on the sprayer and then put the sprayer on the dispenser involved: number three, there was the viewpoint that the housewife might have some objection

to the problem of removing a sprayer and getting their fingers wet with this foul, goopy liquid and having to throw it away.

* * *

[843] Q. What was the nature of your initial instructions with respect to development of the SS-40? A. Well, the decision to develop a new sprayer, Mr. Schmidt, was essentially my decision. We submitted evidence to you yesterday of the grievous, sad experience we were having with our S-25-LP, so that we had reason to [844] have a lack of complete satisfaction with the product in spite of our continued efforts over a period of time to make a product more suitable for various types of customers. I believe we did discuss it, even to the extent of adding another part, such as a boot, and this all occurred in the fall of 1957, as I recall. It became obvious to me that the development of a new sprayer would be essential.

Q. In the fall of 1957 what, more specifically, were your instructions as to the kind of sprayer that you wanted developed? A. Sometime in the fall of 1957 I believe we had had called to our attention a Model 2 Bakan sprayer. I don't remember when it first occurred, I don't remember when I first saw it. The Bakan people I think are reasonably aggressive and I feel confident that we heard of this development from a number of sources and we actually saw the product. I don't remember when I first saw it. It seems to me it was probably late fall of 1957. Now, I don't know whether we were talking about October or September, or what have you.

The situation was disturbing to us only in that the timing of the introduction of a new product by Bakan seemed to be excellent, because we were in grievous difficulty. When we first saw their product we, frankly, felt a little bit of relief in our concern. They introduced the Model 2 sprayer with an overcap. The overcap [845] did not contain leakage within the container. It was just merely a simple matter to turn the container over and the liquid would often almost gush into the overcap.

I don't remember specifically, but it seems to me I had many occasions to talk about the development of the

Bakan sprayer and I found that it was received with a certain amount of interest.

I can only recall one thing in which there seemed to be unanimous opinion about the Bakan shipper sprayer, and that is that it provided a flat surface on the overcap which made it quite easy for the supermarket to stamp their price.

We felt that the product had a basic difficulty in that it did not attempt to contain liquids within the container and prevent them from surging into the overcap. It seemed to us that essentially that was desirable, to keep it from going into the overcap if at all possible, because if the Bakan overcap was abused during shipping or abused in a customer's plant—say a torque machine came down and hit it or turned it—it might tend to leak.

Furthermore, they made the cap of a very soft regular polyethylene material, to my observation. It was obvious to me that they beefed up the sidewall in an effort to prevent or minimize the jumping of the threads.

We were disappointed in the product to the extent that in our opinion, or at least in my opinion, it was not a sufficient advancement to do real credit to the industry. [846] Consequently, because we recognized that neither the S-25-LP or the Bakan Model 2 shipper sprayer which was first introduced was really the product that industry wanted from a packaging viewpoint, we determined that we should attempt to develop something that would more adequately serve our customers' requirements.

Now, we had had in Calmar for a good many years a number of good, clever people. Our research efforts had always been on a small informal basis. In December of 1957 it seemed to me to be desirable to augment our staff by employment of a skilled, capable engineer, because we were faced with real problems with our own customers, our own products; but also, I firmly believed, on the basis of our own increasing sales, conversations with many people, that we had a real opportunity at hand, to say nothing of the challenge.

When I employed Mr. Corsette he came to us from a company who had been building an automatic machine for us. It was necessary for him to acquaint himself with

equipment that we have in our plants, our procedures, the nature of the products. But I can assure you that in the next two to three months—and I believe he went to work for us in about the middle of December—

Q. Of 1957? A. Of 1957—that we had many conversations about sprayers, methods of sealing. He would be responsible, [847] pretty largely, for the work that was going to be done. He had many ideas of his own. To the best of my knowledge, we even had Mr. Cole in on a couple of our conversations. All of this terminated in our developing the SS-40 sprayer.

Now, as far as the overcap is concerned, there was no one that said to us—no one—"Why don't you put an overcap on the sprayer?" We told people we were developing the sprayer. No one said that. This may be a poor analogy but to me it is something like the compact automobiles. The Falcon and the Corvair are both compact automobiles. They certainly are markedly different in their construction, but I know a lot of people, including my little bride, who like the idea, the appearance of the compact automobiles.

* * *

[850] Mr. Schmidt: Is it not fair to say that the Bakan overcap enclosed, and thereby protected, the parts of the sprayer that projected above the collar?

A. It would seem to me that there could very well be an element of protection.

Q. Does it not say that there was an advantage in that it prevented leakage of material to the outside of the container? A. That would be an advantage if it was the case. We never believed that such was the case upon a satisfactory basis for industry, and we feel that our conviction in this regard was confirmed by Bakan at a later date when they sent around letters admitting that the former sprayer which was their first shipper sprayer would not contain leakage.

Q. Then is it your position that the only advantage of the overcap lies in the advantage that it can be dusted [851] easily and can receive the price of the product? A. They are the advantages that we saw in it. It could very very well be.

Q. Were those the only reasons for your having adopted an overcap? A. No.

Q. Were they some of the reasons for your adoption of an overcap? A. I wouldn't say that they are even some of the reasons.

Q. Then what were your reasons for adopting an overcap? A. As I recall, the reasons that we adopted an overcap were to provide a method of holding in place a series of internal seals and also to provide a secondary safety measure; that in the event the series seals were disturbed, the leakage would be contained within the overcap, although that was not the principal function.

Q. Then the purpose for the seal between the overcap and the collar in your construction was to prevent leakage to the outside of the container in the event that any leakage was found in the overcap; is that correct?

The Witness: Will you repeat the question.

(The pending question was read by the reporter.)

The Witness: That is one of the purposes.

Q. Is it not true that another advantage of your [852] overcap is that it does, in fact, protect the head of the sprayer against damage during shipment? A. Yes, it would protect our sprayer; not particularly against damage. It protects to a large extent the series seals, holds them in place.

Q. Then would you not agree with me that the overcap does, in fact, protect the head of the sprayer against damage? A. Oh, yes, if someone were to take our sprayer or the Bakan sprayer and hit the head of that sprayer against this table it could very well be damaged.

Q. And it also has the advantage of protecting the head of the sprayer in shipment; is that not correct? A. That is correct.

Q. Does not the overcap which you adopted have the same advantage as the Bakan overcap, in that it holds the sprayer splunger depressed? A. Yes, that is true, the same as the prior art shows.

Q. And does it not hold the sprayer plunger depressed in a manner different from the way in which the S-25-LP is held depressed? A. Correct.

Q. By way of clarification, do I not understand it to be your position, Mr. Wise, that you have incorporated some advantages in the SS-40 not to be found in the Bakan 2 sprayer? [853] A. That is right.

Q. And that those advantages have to do principally with the sealing means to prevent leakage of the fluid from the container into the overcap? A. That is one of the advantages, yes.

Q. In the construction of the SS-40, if there are any advantages in the Bakan overcap, those advantages have been carried over into the SS-40; is that not true? A. Mr. Schmidt, now, let's keep this in the proper context.

Q. I would be happy to have you put it in the proper context as you answer the question. A. It is true that an overcap will provide protection for any sprayer during shipping, the same as an overcap provides protection on an aerosol valve during shipping. That advantage we recognized and have felt it was properly useful. I can assure you, on the basis of the evaluation that we made of the Bakan sprayer—and I would have to say from a viewpoint of its acceptability, marketingwise, I would have to take the responsibility for the opinions that I arrived at in connection with the Bakan sprayer. I can also assure you that I told our people very firmly in discussing the Bakan shipper sprayer that we did not want it and this we would not copy.

(There was a ten-minute recess.)

Mr. Schmidt: Will you read that last answer, please. [854] (The previous answer was read by the reporter.)

Mr. Schmidt: By "this" you mean the Bakan overcap?

A. The Bakan overcap, if you want to make it that simple. I was referring essentially to the entire construction.

Q. The entire construction of the Model 2 sprayer you are speaking of? A. Yes.

Q. Including the sprayer per se and the overcap? A. That is right.

Q. But you did not give any instructions not to copy the overcap, as such; is that correct? A. I definitely gave instructions not to copy the overcap, as such. You must

remember that if we had copied the overcap, as such, we would have used an overcap that would be identical to yours. We have not used an overcap identical to yours.

Q. In what respect is it not identical? A. The overcap that we have provides a skirt on the inside of the cap that fits into a groove of the collar. The Bakan Model 2 overcap sprayer did not have this feature. Our cap was designed to fit a single buttress thread on the collar. The Bakan overcap is not of that type. It was designed to fit two normal thread designs on the Bakan collar.

The Bakan overcap is made of regular polyethylene, [855] or the initial one was. Ours was made of linear polyethylene. We had been a little bit flattered that in recent months Bakan has seen fit to go to a single continuous thread, to linear polyethylene, and also to a skirt inside the overcap.

* * *

[856] Q. You recall that I asked the question, what are the differences, if any, between the two overcaps, and you named two differences, one being the way in which the seal is formed and the other being material, is that correct? A. No, the other was the function of the skirt to assist in the preventing of thread jumping by the overcap.

Q. Except for those differences, my question is, are the two caps indentical? A. The two caps are not identical. The materials are different for what we believe to be excellent reasons.

Q. They are identical, are they not, in that they both house the head of the sprayer? A. Correct.

Q. They are identical, are they not, in that they both [857] hold the plunger of the sprayer depressed? A. Correct.

Q. They are identical in that they both seal? A. Correct.

Q. They are identical in that they both attach to a collar through the use of screw threads? A. Correct.

Q. They are identical in that they both house not only the head, but the collar? A. Correct.

Q. They are identical in that in each instance the lower-

most peripheral edge of the overcap does not engage the upper surface of the container cap? A. Correct.

* * *

[865] Q. The S-25-LP sprayer leaked in much the same manner, or at least to much the same extent, as the Bakan 2 sprayer, is that not correct?

Mr. Cole: Will you read that question.

(The pending question was read by the reporter.)

The Witness: I don't believe that is quite correct.

[866] Q. Perhaps it would be more proper to say that they both leaked? A. Right.

Q. Now, if the Bakan overcap had been applied to the S-25-LP sprayer in the manner testified by Baxter Scoggin, the leakage to the outside of the container would have been prevented, would it not? A. Not in my opinion.

Q. Why not? A. I saw many examples on store shelves of the Bakan shipper sprayer where leakage occurred almost immediately by just tipping the container over on the side on the shelf.

Q. The leakage to the outside of the container? A. The leakage to the outside.

Q. Why was there such leakage? A. The liquid was not being contained within the overcap. Now, as a matter of record, and purely from the viewpoint of ethics, I would not want to leave Cook Chemical Company with the impression that I deliberately went around turning over their bottles and leaving them that way.

Q. Would you concede that there were instances where the Bakan overcap would retain the liquid and not permit it to flow over the container? A. I would concede that there were instances, but the number that did leak appeared to be to the disproportionate.

* * *

[889] Direct Examination (Resumed)

by Mr. Schmidt.

Q. Mr. Wise, you are the same Robert D. Wise who testified in this room earlier this week? A. Yes.

Q. Do you understand that you are still under oath? A. I do.

Q. Have you been present and listening to the testimony of all of the witnesses this week? A. I have.

Q. Do you agree with the testimony to the effect that the SS-40 shipper sprayer has been successful? A. Yes.

Q. Do you consider that success to be outstanding? A. I believe so.

Q. Do you believe that the success has been substantially greater than whatever success may have been enjoyed with respect to the bayonet type of sprayer? A. Yes, it has. To keep things in their proper relationship, the SS-40 sprayer has been very successful; more so than the S-25-LP. It represents part of the [890] success of the continuing trend, upward sales trend, of shipper sprayers.

Q. Has the plaintiff in this case or any of its affiliates enjoyed any greater success with reference to any other type of sprayer in connection with the commercialization of insecticides?

The Witness: Will you repeat the question, please.

(The pending question was read by the reporter.)

The Witness: It is difficult for me to say that the success has been greater or lesser. I don't mean to avoid the issue. To do that I would have to recall essentially sales volumes and I cannot recall specifically sales volumes in the past.

Q. Mr. Wise, I am not intending to call upon you to furnish us with figures, but I should like to have you answer the question, at least generally, with respect to increase or decrease in sales volumes. A. We enjoyed, because of the introduction of the SS-40 and its favorable consideration by many companies, increased sales of the SS-40 sprayer, including sales to manufacturers of insecticides. The success of the SS-40 sprayer in connection with its acceptance by other manufacturers of insecticides has somewhat paralleled our other efforts in this regard.

Q. Is it fair to say that you have had outstanding commercial success with the SS-40 sprayer? [891] A. We are happy with its success, very happy.

Q. To what do you attribute that success? A. We attribute the success of the sprayer to the fact that we developed and marketed a unit which was superior to any on the market at the time of its introduction.

Q. What features of the sprayer contributed to that success? A. The features of the SS-40 sprayer which contributed to its acceptance by industry were primarily due to the fact that we had in effect double protection against leakage. We had a series of primary seals supported with secondary seals. These features were not present in any other sprayers.

* * *

---

[907] DEPOSITION OF E. G. "PAT" O'REILLY, having been first duly sworn, deposed and testified as follows:

Direct Examination by Mr. Schmidt.

Q. Will you state your full name, please. A. E. G. "Pat" O'Reilly.

Q. And your residence address? A. 10519 Downey Avenue, Downey.

Q. By whom are you employed? A. Wilco Company.

Q. How long have you been so employed by that company? A. Roughly about a year and three-quarters.

Q. In what capacity? A. Plant manager.

Q. Have you been plant manager all the while you have worked for Wilco? A. Yes.

Q. By whom were you employed prior to working for Wilco? A. I was self-employed.

Q. Where? A. In Kansas City.

Q. What did you do prior to that? A. I was production manager for Cook Chemical Company.

[908] Q. When did you commence work for Cook Chemical Company? A. In the early part of 1950.

Q. When did you terminate your employment with Cook? A. In April or May of 1954, I believe.

Q. And your duties with Cook were what? A. Production manager.

Q. At what location? A. I headquartered in Kansas City.

Q. Where did you do your work? A. In Kansas City.

Q. Were you ever located anywhere other than in Kansas City while working for Cook? A. No; with the exception that I was in charge of their Jacksonville, Florida, operation and one in Baton Rouge.

Q. What were your duties as production manager? A. Well, you name it, if it had anything to do with production, from purchasing to the time it is shipped, manufactured, packaging, formulating.

Q. That is all within the category of production manager? A. That is right.

Q. What was the nature of the products that you had control of? A. Insecticides.

* * *

[913] A. There was no leak-proof sprayer. In shipping, warehousing, many times cases get turned upside down, and no ordinary sprayer would fit in there to keep it from leaking.

Q. Are you saying that if you inserted the sprayer in the bottle with nothing more, and placed those bottles in a carton, let's say of ten or twelve, that you would have leakage if it upset? A. Oh, yes, definitely. The weight of the bottle would be sufficient to depress a sprayer in the inverted position.

Q. Would it leak if inverted, even though the plunger were not depressed? A. Oh, certainly.

Q. Suppose they were merely laid over on their sides, where there would be no depression of the plunger. A. No, there would still be leakage.

Q. Was there any other disadvantage to merely inserting the sprayer in the bottle? A. Well, it was impossible to ship under those conditions.

Q. I mean aside from leakage. A. No other than the economics of it.

* * *

[915] Q. Do you ever recall Mr. McIntyre submitting to you the idea of a sprayer wherein the plunger would lock down? A. Yes.

Q. Did you actually see that device? A. Yes. He had samples of a lock—the type you push down and twist it to lock.

Q. Did he submit that to you as a solution to your problem? A. It was submitted only on what they were working on. It was not submitted as a finished leak-proof sprayer. You must understand how a certain type of sprayer might work with certain types of liquid, but in our particular type of product it would not. Now, I don't say that it would not work with a creamy, pasty substance, but in a very aqueous type of product, that pours very easily, then it would not.

Q. You are saying that you did not have a sticky type of product but you had an aqueous solution? A. No. Ninety per cent, basically, deodorized kerosene, which is very fluid.

Q. As production manager did any problems or difficulties come back to you concerning the use of a package wherein the sprayer would be hanging on the side of the bottle? A. Yes. From a breakage standpoint, Number One. Number Two, we used to get many reports back on pilfering [916] in stores. They were not securely attached.

Q. Now, when would the breakage occur? A. Normally in shipment.

Q. Are you speaking of breakage of the sprayer? A. Yes. We would have actual breakage.

Q. What parts of the sprayer would normally break? A. Normally the stem would dip, the end of it.

Q. That would occur between the time of shipment at Baton Rouge and the time it was received by the broker or retailer? A. Yes.

Q. Where would the pilfering take place? A. At the retail level.

Q. At the time that you severed your relationships with Cook did you know of any commercial use of a so-called leak-proof sprayer of any kind? A. Only the type I mentioned on Jergen's Lotion, where they had this cap over the end of the spout.

Q. Do you know of any in the field of insecticides? A. There were none.

* * *

[917] Q. As production manager of Wilco what has been your experience with respect to problems in packaging when you used the Bakan sprayer with the cover cap? A. Well, basically, I mean, as a comparison, I was away from plant production for several years, but comparatively, I mean, the—again getting back, the basic operation is economy, so apparently when you stick a sprayer in the package, I mean, you don't have all the excess labor that you would normally have.

Q. Explain to us in the same manner as you did before the steps of packaging when you use a sprayer that has a cover cap. How does it differ insofar as packaging is concerned? A. Well, we still insert them in the container manually. There is no way of getting away from that. But it is merely hitting the opening in the container and then our capping unit automatically tightens the cap onto the container.

Q. Prior to the insertion of the sprayer into the neck of the container or bottle is the cover cap attached to the sprayer, or do you put that on later? [918] A. No. We receive those with overcap attached.

Q. They are furnished to Wilco by Bakan with the cover cap on the sprayer? A. That is right.

Q. So you need not handle the cover cap separately from the sprayer? A. No.

Q. After the sprayer is inserted into the bottle is the operation of screwing the metallic cap onto the threads of the bottle automatic, or is that by hand? A. Depending on which line. We have done it both ways. Normally on our higher production volume items it is done automatically.

Q. It permits of automatic screwing of the cap onto the bottle, is that correct— A. That is correct.

Q. —at a predetermined torque? A. Yes.

* * *

[920] Q. Would you say that that method of packaging today by Wilco is a savings, economically, over and above

the packaging that was done in Baton Rouge? A. Oh, very definitely.

Q. What about complaints now; are you receiving similar complaints from the retail level with respect to breakage and pilfering? A. No, none from pilfering. The only breakage that occurs would be—which is a minimum source of complaint—would be breakage in the store by people knocking it off the shelf.

Q. Breaking the bottle? A. That is correct. Or breaking—if it would land on the sprayer cap itself it is possible to break it, but as far as any shipping breakage, we have had no complaints.

Q. You have no complaints of sprayer breakage whatsoever? A. That is right.

[921] Q. Do you have any complaints of pilfering of the sprayer? A. No, not inserted in the bottle.

Q. Do you know of any instance where a customer has complained about stealing of these sprayers off the bottle? A. No. The only complaints we have are functional.

Q. It has nothing to do with the stealing? A. It has nothing to do with the packaging.

Q. Can you name the various products being packaged by Wilco through your direction, using the Bakan sprayer having a cover cap? A. Yes. Basically our highest volume product—well, we have two fairly high-volume products. One is Clearex window cleaner, Beauty Quick spray starch, Biff Ant and Roach, and of course we have windshield sprayers, which we attach to a plastic flask and these are used, of course, in service station windshield service.

Q. Do they also use the Bakan sprayer with the cover cap? A. No cover cap on these.

Q. No cover cap in that case? A. These are not filled. They are an empty flask with a sprayer screwed onto the flask.

Q. So the three products now being packaged by Wilco utilizing the Bakan cover cap type of sprayer include Biff Ant and Roach, Clearex, and the starch product? [922] A. That is right. We have two others under consideration.

Q. And your method of packaging those three products is essentially the same in each case? A. Yes.

* * *

[925] Q. Now, I have two Bakan sprayers. This one is marked "Bakan-2." This one I have marked "Bakan-2 Modified." Can you look at these and tell me which of these two is being used in the packaging of Wilco products? A. We are using the modified at the present time.

Q. In what respect does that differ from the one marked "Bakan-2"? A. As far as I can tell, it is merely that we have a transparent chamber in here, against this.

Q. Have you noticed the difference at the upper side of the collar and the manner in which the seal is formed? I call your attention to the fact that there is a slight difference in the structure here. A. Yes.

Q. Have you noticed that? A. I am not familiar with this particular sprayer.

Q. You are referring to the Bakan-2 when you say you are not familiar with the— A. Well, the Bakan-2 Modified, that is what you would call this one. This is the sprayer I am familiar with.

Q. That is the one you are using now? A. That is right, sir.

Q. And in that one there is a projection in the inside [926] of the overcap, is there not, which fits within this ridge on the top of the collar? A. Yes.

Q. And on the Bakan-2 there is a ridge up on the inside of the overcap which engages the outside of the ridge on the top of the collar, is that correct? A. That would indicate this, yes. As I say, I am not familiar with this particular one.

Q. Meaning the Bakan-2? A. That is right, yes.

Q. You are familiar only with the Bakan-2 Modified? A. Modified.

Q. Mr. O'Reilly, how long have you been with the Wilco Company? A. Approximately a year and three-quarters, basically since March of 1961, specifically.

Q. Then, you wouldn't know whether this sprayer marked "Bakan-2" in which the seal between the overcap

and the collar is made on the outside of the collar rim—
A. No, sir.

Q. You wouldn't know whether that was used by Wilco before you came with them? A. I couldn't tell you. I don't know.

* * *

---

[938] DEPOSITION OF JAMES A. McNEILL,

having been first duly sworn, deposed and testified as follows:

Direct Examination by Mr. Schmidt.

Q. Would you state your full name and address? A. J. A. McNeill. And the company address?

Q. Your home address, please. A. Home address, 6305 North Willard Avenue, San Gabriel, California.

Q. You are president of the Wilco Company, is that correct? A. I am.

Q. Were you instrumental in forming the Wilco Company initially? A. I was.

Q. About when, can you remember? A. 1936.

Q. Was this company owned solely by you at that time? A. No. It was originally a partnership consisting of myself and a gentleman by the name of High, H-i-g-h.

Q. Is Mr. High still with the company? A. No. He was with us for about three or four years and then we parted company.

Q. Did you subsequently bring in a man by the name of [939] Martin as a partner? A. Mr. Martin came in and took Mr. High's partnership.

Q. That was Andrew Martin? A. Andy, Andrew Martin.

Q. What type of business was Wilco formed for, that is, what did you do intitially? A. Originally our main business, when we started Wilco, was making sprayers, metal sprayers, for the Union Oil Company. That was our main business. After that we went into manufacturing products.

Q. Was Wilco Company subsequently incorporated? A. Subsequently incorporated.

Q. And it is a corporation today? A. It is a corporation, a California corporation.

Q. What was the purpose of the metal sprayers that you made and sold to Union Oil? A. Well, the type of sprayer that we made and sold to Union Oil would be manufactured by people prior to my forming the Wilco Company and we took it over. The metal sprayer was principally used for dispensing windshield cleaner fluid at that time for the Union Oil Company and, to my knowledge, was one of the first sprayers for dispensing windshield cleaner.

Q. The nature of that sprayer was a vertically reciprocating plunger, is that correct? A. Yes, that is correct. [940] Q. And it was mounted in the container for the purpose of withdrawing the material and spraying it? A. The sprayer was mounted on a cap and screwed into the bottle, and the plunger went all the way down to the bottom.

Q. The container cap had to be removed first, prior to insertion of the metal sprayer? A. That is right. The sprayer was made of brass.

Q. Approximately how many years did the Wilco Company make and sell those metal sprayers to Union? A. Well, we made them right up until the development of the plastic sprayer, and we were the sole source of supply to Union until that time, and that was probably—we formed the corporation—we formed the Wilco Company in '36. We probably made them right up to the development of the plastic sprayer, somewhere in the Forties.

Q. The plastic sprayer was developed by Wilco Company? A. The plastic sprayer was developed by Wilco Company.

Q. There was a Calmar division of the Wilco Company, is that correct, at a later date? A. Well, we started—when we made the metal sprayer it was made outside for us by a machine shop, and we controlled the manufacture of it, and then when we went into the plastic sprayer, why, then we set up the Calmar Company to manufacture plastic sprayers.

Q. What was the purpose of going from a metal sprayer [941] to a plastic sprayer? A. The purpose of going from a metal sprayer to a plastic sprayer was principally due to the fact that the Union Oil Company developed a windshield cleaner, and Dr. Flaxman, who was a specialty chemist of the Union Oil Company at that time indicated that the future success of windshield cleaners would be related to chemicals that would attack metal, particularly corrosion. So we then decided that we would try and make—use plastic. At that time plastics were coming in to where they could be used for this purpose.

Q. Who in your company was responsible for the development of a plastic sprayer? A. I would say that basically Andy Martin was responsible for the early development of the plastic sprayer.

* * *

[945] Q. Do you recall ever testing or looking at a so-called S-25 sprayer, a bayonet type of device? A. Well, S-25, is that a Calmar sprayer?

Q. Yes. A. Yes. Calmar was furnishing us with sprayers, and I am not sure of the exact date, but we had the so-called overcap or what I call leak-proof sprayer submitted to us by Calmar and by Bakan.

Q. Prior to that time do you recall Calmar having submitted to you a sprayer of the kind that the plunger is depressed and turned to hold depressed? A. Yes, I do.

Q. Do you recall the purpose of submitting that type of sprayer to you? [946] A. Yes. That was submitted for the purpose of shipping our product with the sprayer in it, and it was turned down by our laboratory as not being—well, both by our laboratory and by Marketing as not being satisfactory.

Q. For what reason was it unsatisfactory? A. Well, basically I believe the lab report on such a sprayer, if there was a written report—I listened to Flax. I am not sure. Basically it didn't function the way we wanted—in other words, we didn't feel that that was the right kind of a sprayer for a housewife to use. The locking device was such that we didn't feel it was a marketable type whether it performed or not. That was one reason we didn't use it.

Q. What were the difficulties that you experienced or knew about with respect to a so-called integral sprayer? A. Well, when we owned Calmar—when I owned Calmar, why, we had for many years endeavored to come up with what we termed a leak-proof sprayer, and we had made many different types of samples and different types of gadgets to try and do it, and we hadn't come up with anything that was satisfactory.

However, we did at all times wish to have one that could be shipped in the bottle because we felt that there was a big marketing potential for it. It was something that we were all looking forward to getting at some time.

Q. Do you recall any of your customers making a [947] request to you, to Calmar, for a leak-proof sprayer? A. I don't. Andy Martin was running Calmar, and I basically don't know whether, other than ourselves as a marketer, there were marketing requests, although we discussed it many times and felt there was a need for such a sprayer. Whether there were specific requests from customers or not I can't tell you.

Q. Do you recall whether or not there was any need or request or any discussions concerning a leak-pro sprayer for the Biff product at the time that you we working with Union Oil Company on that product? A. Oh, yes. We wanted to get a sprayer that we could put in the bottle for particularly ant and roach type of sprays, which were a coarse spray, and didn't lend themselves at that time to—well, this is either before or after aerosols.

Q. Why did you want a product of that type? A. Well, basically the only way we had to put a sprayer out on a can or a bottle of insecticide was to hang it on there with the neck ring that was being used, or that we used, and other people were using. We didn't think that was a satisfactory way to do it.

Q. Was the neck ring developed by the Wilco Company? A. Well, we developed our neck ring, but prior to that, why, Calmar, at the time we owned it, also had a neck ring for a very large customer, that used a lot of them. [948] I believe the product was known as a deordorant. I believe it was Nil, or some deodorant product, that first used large quantities of neck rings on them.

Q. By a "neck ring" do I understand you to mean a device that connects to the neck of the bottle? A. The neck ring that we developed was a piece of cardboard or heavy paper that went around the neck of the bottle, and the sprayer hung on the side of the bottle.

Q. The neck ring had a hole for receiving the dip tube of the sprayer, is that correct? A. That is correct.

Q. You say that was not entirely satisfactory from a packaging standpoint? A. Well, we didn't feel it was the ultimate. It would be much better to put it in a bottle. We also had a pilferage problem. Everybody in marketing has in the grocery store when you hang something on something. We felt it would be much better to have a sprayer that would go in the bottle.

Q. Do you recall any discussions concerning the alleviation of the pilfering problem if you could mount the sprayer in the bottle at the time of shipment? A. Well, we had many discussions regarding developing a leak-proof—or a sprayer that could be shipped in a bottle, and at all times we were striving to obtain one from—while we owned the company—from our own company, or since then from people that took it over, or anybody else [949] that was in the sprayer business.

* * *

[951] Q. Based upon those years of experience in packaging, what do you have to say with respect to the package that includes a leak-proof sprayer as compared with one that has a sprayer on the side of the package? [952] A. Well, we feel it is a step in the right direction, and I think the proof of that is the fact that we have packaged our Clearex in a package that has a leak-proof sprayer in it, and in addition our present Beauty Quick starch has a sprayer in it, which is the direction we have gone after we got a satisfactory leak-proof sprayer.

Q. From the standpoint of the housewife or the ultimate consumer, which of the packages would you feel would be more attractive? A. Do you mean with a sprayer in the package?

Q. Yes. A. Separate? We feel that there is no comparison between having a sprayer in the package and having it hanging on the side of the package, particularly

inasmuch as today people using sprayers to dispense with on household products are competing directly with aerosol products, which are a self-contained unit. And basically the advent of aerosols has made the necessity for a leak-proof sprayer much more than it even was before aerosols came on the market, from a marketing standpoint.

Q. Why would a housewife desire a sprayer in the container because of her having been acquainted with the aerosol product? A. So she can pick up a package with a sprayer in it and unscrew the cap, like she can take off the cap of an aerosol, and spray, without having to do anything else. [953] In other words, it is easier for her.

Q. Do you feel that the housewife tends to object to the necessity of removing the metal cap and inserting the sprayer that hangs on the side? A. Well, we feel in marketing today that anything that you can get that simplifies a package and leaves the housewife less to do, or less to think, or less—other than to take it up and use it, would be satisfactory and a step in the right direction.

Q. Now, prior to the advent of the Bakan sprayer with the cover cap why did you not merely insert the sprayer in the bottle and ship it in that fashion? A. Because the former sprayer before the advent of a leak-proof sprayer could not be shipped in a bottle satisfactorily. Otherwise we would have done it many years ago.

Q. Tell us why it couldn't be shipped satisfactorily. A. Well, basically it would pump itself out in shipping, or it didn't have the—it wasn't constructed properly to lend itself to shipping. There was no cover on it and it wasn't constructed to prevent leaks.

Q. By that do you mean leakage of the product to the outside of the container, past the sprayer? A. Leakage of the product to the outside of the container and leakage of the product actually inside the cap are both important features, a lot more important in some products than others.

[954] Q. What about the breakage factor? A. The breakage factor on sprayers?

Q. Inserted in the bottles at time of shipment. A. Well, in other words, before they leaked; we didn't ship

them in the bottle. Since the advent of what we term the leak-proof sprayer here we have no breakage problem.

Q. Yes. But my question is: Had you shipped with the sprayer in the bottle without a cover cap do you feel that there would have been a breakage problem or not? A. Well, we wouldn't have shipped because they would leak, pump themselves out, so we never got to this point of actually trying it out for breakage.

Q. The very fact that it would leak was sufficient, as far as you were concerned, not to— A. That was the main thing, yes.

Q. At the time that the need for a leak-proof sprayer came what was done, if anything, by way of attempting to develop a solution to the problem by Wilco or Calmar? A. Well, as I said, previously we tried to develop a leak-proof sprayer and made up several types of so-called leak-proof gadgets or modifications of the sprayer, and none of them were entirely satisfactory, and we never did find a satisfactory one until we got—until we adopted the Bakan sprayer, was the first satisfactory leak-proof sprayer as such, that we went ahead with our program of putting a sprayer in the bottle.

[955] I might say here that we had been buying sprayers from Calmar for many years and, incidentally, many millions, ever since Calmar was taken over by Drackett, and the former sprayer that you mentioned, where they pushed it down and turned it, was one that was getting closer to our need, but still wasn't satisfactory.

Q. Prior to the time that Calmar was purchased by Drackett you said many attempts were made to come up with gadgets that would solve the problem. Do you recall the nature of any of those gadgets? A. Oh, yes. We discussed putting a Celloseal band over the top of the sprayer, plugging up the bottom of the sprayer to keep it from pumping itself out. Many, many different types of ideas were presented, but in none of them did we come up with the solution that would make it simple for the customer to use the sprayer once we put it out on the market. In other words, if we plugged up the bottom of the sprayer the customer would have to take off something, and it wasn't suitable for merchandising.

Q. Did you ever attempt to commercialize any such gadgets? A. Did we ever attempt to commercialize it? Do you mean market it?

Q. Market it. A. We never got it developed to the stage where it was marketable, in our opinion. I think all of this early [956] playing around with trying to develop a leak-proof sprayer, I think, ultimately led to the development of one, but we hadn't reached this point prior to our—my getting out of Calmar and Calmar going over to Drackett.

* * *

Cross-Examination by Mr. Cole.

Q. Mr. McNeill, your testimony indicated that you felt that this mounting of the sprayer in the bottle prior to delivery to the ultimate customer was a desirable thing, and that a leak-proof sprayer would be necessary in order that it could be achieved, is that correct? A. That is correct.

Q. I believe Mr. Flaxman indicated that your company, the Wilco Company, was interested primarily in buying the Bakan-2 sprayer, of which I show you a sample. Do you confirm that? A. If this is the one we are buying, this is it, yes.

Q. Are you buying this one, which is the Bakan-3 model, having the more or less triangular head, with the depression in the middle? A. Are we buying this for windshield cleaners? I really don't know.

Q. Let me show you this, too. There is a little stud— [957] A. We have had so many modifications of sprayers.

Q. There is a little stud. A. I am not much better than Flaxman. I have seen the sprayer. Whether we are using this one ourselves—I believe at the time we considered it for use for service stations. I am not sure whether this is the one we are using.

Q. Let me explain that this Bakan-3 sprayer, which I have just shown you, has some inner seals which purportedly prevent leakage of the liquid into the overcap. Now, are you buying that sort of thing in addition to the Bakan-2 sprayer, which does not prevent leakage into the

overcap? A. Well, if we are we would be buying it for service station use, and I am not sure whether we adopted this head or this sprayer as such. I certainly can find out but I don't know right now.

Q. So your best recollection is that this is your major purchase so far as these pump sprayers are concerned, the Bakan-2 type of sprayer? A. Yes. This is our major purchase, but if we are using this for service station use we buy a lot of these, but I just don't happen to know if this is the exact sprayer we are using.

Q. I see. You made reference to leak-proof sprayers as a desirable thing. Do you regard this Bakan-2 sprayer as a leak-proof sprayer? [958] A. For purposes of what we are talking about here, yes, we certainly consider it that.

Q. Are you acquainted with the fact that the Bakan-2 sprayer has no provision to prevent leakage into the overcap? A. Well, as compared to this one?

Q. Yes. A. Yes, I am acquainted with that.

Q. I think you mentioned that one of the disadvantages of the sprayer which merely used an overcap was that you got leakage into the overcap, is that right? A. That is right. I mentioned that, yes. However, these sprayers that we are now using do not leak into the overcap like the sprayers used to many years ago, as much.

Q. Do you mean if you inserted one of these Bakan-2 sprayers it would not leak into the overcap? A. Not as much as they used to when we were making them years back.

Q. Has there been any change made in the Bakan-2 sprayer, so far as you know, which would prevent leakage into the overcap? A. Well, do you mean since the advent of the Bakan-2 sprayer?

Q. Yes. A. I don't know.

Q. I see. A. I imagine they change them periodically. I don't [959] know.

Q. Are you familiar with the internal structure of these sprayers? A. Well, generally speaking, yes, I am familiar. I used to be in it. As to the—all the small details of either of these sprayers, I am not even up on it any more.

Q. Are you sufficiently informed to recognize that the discharge passage in the Bakan-2 sprayer is not obstructed so that if you insert the sprayer, the liquid may run out through this small orifice in the head? A. Yes, but a lot of that depends upon the type of product you use.

Q. Do you mean, for instance, if you use molasses it wouldn't come out? A. Well, I mean that if you use a solvent-based product in many cases it will come out faster than it will with a water-based product.

Q. But water does leak out of these sprayers into the overcap? A. Yes. Under certain circumstances I am sure it will.

Mr. Cole: That is all.

Mr. Schmidt: No questions.

* * *

---

[964] DEPOSITION OF LEE E. McINTYRE,

having been first duly sworn, deposed and testified as follows:

Direct Examination by Mr. Schmidt.

Q. Will you state your full name, please. A. Lee E. McIntyre.

Q. And your residence address? A. 221 South Cliffwood, Los Angles 49.

Q. Are you acquainted with the Calmar Company of Los Angeles? A. Yes.

Q. How long have you been acquainted with that company? A. Well, I'd say since its inception.

Q. Do you know approximately when that was? A. I believe it was first formed as a partnership about 1943 or '44, or somewhere along there.

Q. Let's put it this way. Do you recall what you were doing at the time that you first became acquainted with the formation of the Calmar Company? A. Yes. I was working for Union Oil Company.

Q. In what capacity? A. I was a division manager.

Q. How long did you work for the Union Oil Company? A. Sixteen years.

[965] Q. Between what dates, approximately? A. 1930 and 1946.

Q. What occasioned your becoming acquainted with the Calmar Company? A. Well, we did a lot of business with Wilco Company, who were the forerunner of Calmar Company, when I was manager of Specialty Sales of Union Oil Company.

Q. Were you at that time acquainted with management in the Wilco Company? A. Yes.

Q. Can you name those individuals? A. Yes. J. A. McNeill and A. M. Martin.

Q. Were those individuals also, to your knowledge, at that time associated with the Calmar Company? A. Well, the Calmar Company at this particular time that I am speaking of, when I was manager of Specialty Sales, was not formed.

Q. I am speaking of at the time of the initial formation of Calmar Company. A. At the time of its initial formation they were the principals, yes.

Q. To your knowledge at that time? A. To my knowledge they were the partners.

* * *

[972] Q. You spoke of costs. Can you compare costs of manufacture insofar as the metallic sprayer and the plastic sprayers are concerned? A. Well, the original metal sprayer that we bought from Wilco, to the best of my knowledge, was in the 15-cent range per unit. We later—they later developed a cheaper model that dropped down into the 12-cent bracket and later, after the plastic sprayer was developed, it dropped down into the six, seven, eight-cent bracket, along in there. [973] I can't remember the exact figures.

Q. At the time of Union's use of a metallic sprayer for dispensing windshield cleaner, did any question arise as to difficulties or problems incident to distribution of the sprayer separately from the container in which the windshield wiper was distributed? A. Could you reword that? I don't believe I quite follow you there.

Mr. Cole: I didn't either.

Mr. Schmidt: Would you read the question.

If there is an error in there, we will catch it when you read it.

(The pending question was read by the reporter.)

Mr. Schmidt: It should be "windshield wiper liquid."

The Witness: Well, I don't recall any problems. There was some thought to packaging a unit with a sprayer, but we were never able to do so because we knew—we never had any way of shipping it, except to ship the sprayer in a separate package and then have the customer insert it into the bottle.

Mr. Schmidt: For what reason did you give thought at that time to shipping the sprayer in the container in which the liquid was packaged?

A. Well, simply from the standpoint of selling a complete unit, a complete applicator unit, saving the cap cost and saving the cap shipping cost, and saving the box [974] that you had to package the sprayer in separately.

Q At a later date did the need for packaging the sprayer with the container become more acute? A. Well, do you mean during a later date with Union Oil?

Q. No. Subsequent to the abandonment of the use of the metallic sprayer. A. Well, you are covering quite a range of territory here now. I am still over in Union Oil, and you are still asking me questions about Union Oil, and then you are asking me something about later. How much later?

Q. Perhaps I could clarify it. While you were still at Union Oil did the need for packaging the sprayer with the container arise? A. Well, it was never what I would call acute. It was never an acute problem while I was with Union Oil because there really wasn't enough volume involved at Union Oil to make it an acute problem.

Q. While you were with Union Oil was the windshield cleaner ever distributed in other manners than directly to your service stations? A. Well, the windshield cleaner was also distributed under the name of Clearex to the grocery trade and to the drug trade for resale to consumers.

Q. Was that done at the time that you were still using the metal sprayer? [975] A. Yes.

Q. Now, with respect to the distribution to the consumer trade did you find any need at that time for a sprayer that could be mounted in the container? A. I can't recall any particular reason for wanting a sprayer mounted in a container at that time because the metal sprayers we were putting out in those days, they were made in such a manner that they would last for 30, 40, 50 bottles of cleaner, and it was really only necessary for a person to buy one sprayer, and then they would just—they should buy dozens of bottles to go with that sprayer and just move it from one package to another.

* * *

[976] Q. Now, during the time that you were a partial owner of Calmar did you at any time work with Cook Chemical Company of Kansas City, Missouri? A. Yes, I did.

Q. In what manner? A. Well, I was the liaison man between the company and Cook Chemical insofar as scheduling of requirements or production requirements with them, sales contracts, development work, et cetera.

Q. Do I understand that Cook became a customer of Calmar? A. Yes. In 1949 they became a very good customer of Calmar.

Q. Did you have anything to do with that personally? A. Yes.

[977] Q. How did that come about? A. Well, in response to an inquiry from someone in Cook Chemical—I can't recall his name at the moment—we sent samples of sprayers to them, as we did to many people who wrote in for samples, and as a result of that sampling we received an order from Cook Chemical for—the initial order from Cook Chemical I remember very well because it was at that time a very large order to Calmar Company, for 100,000 sprayers, which was of our glass cleaner type of sprayer or our—more or less general purpose sprayer, I guess you would call it.

Q. That was a plastic sprayer? A. Yes. It was a plastic sprayer made from Vinylite.

Q. Did Cook Chemical, in placing the initial order, indicate to you the purpose they intended to make of it? A. Yes. It was going to be used for an insecticide, and

we checked it out in their insecticide to be sure that the sprayer wouldn't be dissolved, because that was one thing we practically always had to check with any new product, was to get a sample of the product and then put a sprayer in and let it stand on the shelf for a while to be sure that it had the proper shelf life.

Q. Subsequent to the initial order did Cook Chemical Company continue to purchase sprayers from Calmar? A. Yes, for a number of years, until we opened a plant in Puerto Rico, and then we started supplying them [978] principally from the Puerto Rican company we organized called Marmac.

Q. Tell us a little about the volume of sales to Cook. Did they increase, or remain the same? A. Yes, I would —I believe that Cook Chemical purchased approximately a million sprayers from us the first year that they purchased sprayers from us, and the following year I believe they purchased around three million sprayers, and in subsequent years they purchased between five and seven million sprayers annually.

Q. Did you consider Cook as a major customer of Calmar at that time? A. Very much so.

Q. Did those sales to Cook by Calmar continue up to the time that you sold out to Drackett? A. Well, either from Calmar or Marmac Company?

Q. Yes. A. Yes.

Q. During the time that Calmar was selling to Cook were any requests made to you personally for improvements in the sprayer in any manner? A. Oh, yes. We had many, many requests for—we were always trying to make up different sprayers for them, sprayers to spray from gallon cans and sprayers that could be shipped in a package.

Q. What was the purpose, if you know, for Cook's [979] request for a sprayer that could be included in the package? A. Well, I think the primary reason was to prevent—was to avoid pilferage. They had a lot of—you see, in the case of Cook they used a sprayer with every bottle, every pint or quart bottle they shipped, and they were hung on the side of the bottle with a plastic collar, and they had quite a bit of pilferage in the stores, where

kids, I guess, would come in and take the sprayers and carry them out, and then someone would buy the package and there wouldn't be any sprayer with it.

So I think that was, to my memory, the principal reason that they wanted to get something that could be shipped right in the package and locked into the bottle, that couldn't be removed by pilferage.

Q. Do you recall whether or not either you or the Calmar Company made any suggestions to Cook as to how that problem might be solved? A. Well, we submitted certain prototypes or samples to Cook from time to time, but we never gave them anything that was satisfactory. We never could—we tried a variation of a bayonet-type dispenser, that we—a bayonet-type closed dispenser that we put out to certain hand lotion customers, where we would lock the head down into the collar, onto an "O" ring and put a polyethylene cover over the spray orifice. But never do I—we never were able to lick the problem insofar as liquids of that type [980] were concerned. We just couldn't stop them from leaking.

Q. That method, then, was not satisfactory to Cook, is that correct? A. That is correct.

Q. And it was not satisfactory to Calmar either? A. No. We never—we may have made one or two experimental sales of that type of unit to various customers, but never were we able to market it in any quantity because we could never be sure that it was a leak-proof package.

Q. Do you recall ever having made any sales to insecticide manufacturers other than Cook of the bayonet-type? A. No, not to my knowledge.

Q. Would you say, then, that for the most part the bayonet-type was successful only with products other than insecticides? A. For thicker products, such as hand lotion.

Q. What efforts were made at Calmar to solve the problem during that period, do you recall? A. Well, I think we were—those of us who were interested in the development were working on the problem off and on for all the years I was with Calmar.

* * *

[1001] DEPOSITION OF ANDREW M. MARTIN,

having been first duly sworn, deposed and testified as follows:

Direct Examination by Mr. Schmidt.

Q. Will you state your full name and residence address. A. Andrew McKay Martin, 2749 Via Campesina, Palos Verdes Estates, California.

Q. Mr. Martin, I hand you soft copies of two patents, both issued on November 7, 1944, to Wilco Company, Los Angeles, California, a co-partnership composed of Andrew M. Martin and James A. McNeill, No. 2,362,080 and 2,362,-081, both of which name Andrew M. Martin, Los Angeles, California, as the inventor, and ask you whether you are the same Andrew M. Martin as is named in those two patents as the inventor. A. I am.

Q. Inasmuch as the patents indicate an assignment to Wilco Company, a co-partnership, I presume you were the partner of Mr. McNeill in the Wilco Company at that time, is that correct? A. It is.

Q. What was the business of Wilco Company during the partnership between you and Mr. McNeill? [1002] A. At the time of filing or at the time of issuance?

Q. I want generally the type of business, the nature of the business during the partnership, during the time that you and Mr. McNeill were partners, in broad terms. A. We were involved in the manufacture of spraying and dispensing devices, other applicator devices, and also in the packaging of proprietary and private-label packaging.

Q. What was the nature of the packaging operation so far as products are concerned? A. In general terms they could be covered by household and automotive items, products.

Q. Who were your principal customers in packaging? A. Our main customer at that time was the Union Oil Company of California. We had many others.

Q. You mentioned dispensers or sprayers. Did the Wilco Company manufacture and sell dispensers and sprayers? A. For a short time we carried on this business, at its inception, under the name of Wilco Company.

Shortly thereafter we formed another company, Calmar Company, for the reason that we did not want to openly appear to be in competition with our own customers, private-label customers.

* * *

[1003] Q. Now, is it your testimony also that by placement of the sprayer in the bottle, the presence of the sprayer in that manner will enhance the sale of the product more so than if the sprayer is not attached to the product in that manner at the time the customer buys it?

* * *

[1004] The Witness: The sprayer and the product are usually displayed side by side in the retail market. I know from experience that the Calmar Company sold more sprayers and/or dispensers after the use—or after the custom of packaging the sprayer with the product was used. This is the thing that I personally was interested in, for that very reason. I don't know if that answers your question or not.

Mr. Schmidt: You are now saying, are you not, that a given product will sell better if there is a sprayer associated with it than if the customer had to go somewhere else to buy the sprayer?

* * *

[1005] The Witness: I do not think that the consumer had to go of necessity somewhere else to buy the sprayer as the two—as the product and the sprayer were displayed side by side on the retailer's shelf. However, I think the answer to the question is borne out by the fact that large users of our sprayers increased their sales by merchandising the two pieces together. I think a check of the records may show this, prove it or disprove it.

* * *

[1006] Q. Now, going one step further, would you say that placement of the sprayer in the container would be still better than having it alongside the product? A. Yes.

Q. Why? A. The packaging of the sprayer fastened to it in some manner was not altogether satisfactory be-

cause of the fact that the two would become separated in the handling.

* * *

Mr. Schmidt: Q. When did you first become aware of the need or desire by any of your customers for placement of the sprayer in the container?

A. My first recollection of this request came from Mr. McIntyre, who was then manager of the Specialties Division of the Union Oil Company shortly after the use of thermoplastics for the manufacture of the sprayer.

Q. Did you make any effort yourself, personally, to come up with a solution or an answer to the problem submitted [1007] to you by Mr. McIntyre? A. I did.

Q. What were the results of your efforts? A. The best result obtained at that time was the creation of a container with a flat side, the other side being rounded, so that when it lay on its side the sprayer was above the liquid level in the container.

Q. Why did you want the sprayer to be above the liquid level in the container when the container was lying on its side? A. So that it would not leak out, so that the product would not leak out of the container.

Q. In what manner would it leak out of the container if the liquid level were not below the sprayer? A. In any one or more of three ways: up through the stem, cylinder, piston and head, through the orifice; secondly, through the breathing mechanism incorporated into the unit; and, third, through the clearance between the piston and the collar, which is in part covered by No. 2.

Q. What would be the purpose of ever wanting to lay the container on its side? A. To prevent it from leaking.

Q. Do you mean by that that— A. In this manner we could keep the sprayer above the liquid level. There was another reason also. This container—this combination of product and sprayer was to [1008] be carried in the glove compartment of an automobile, which would not allow—which was not designed for upright containers.

Q. Then, the purpose of laying the container on its side was to permit placement of the container in a glove compartment of an automobile, is that correct? A. That is correct.

Q. Now, what type of product did you have in mind that would be used in such a container? A. The product was to be a windshield—an automobile windshield cleaner.

Q. Did you present this idea to Mr. McIntyre? A. I did.

Q. What was his reaction? A. "It cost too much."

Q. Did you at any date subsequent to that again work on the problem of placement of the sprayer in the container? A. Yes.

Q. Did you come up with any ideas? A. Yes.

Q. Can you tell us the nature of those ideas. A. Yes. We thought of encompassing completely that part of the sprayer that was inside the bottle, below the cap, in a plastic film, was one idea.

Q. Was that a film that would be sprayed onto the lower portions of the sprayer? [1009] A. No. It was more of a bag type.

Q. How would it be associated with the container? A. It would be inside the container and it would be also down into the liquid.

Q. Would any part of the sprayer be contained within that member? A. All of that would be within the bottle, inside it, all under the cap.

Q. To whom did you submit that idea? A. I don't know that we submitted it to anybody. I don't recall. I just—it was one of the things that we came up with. We looked it over and checked it over, and I think we just discarded it.

Q. For what reason? A. Went on to another idea.

Q. Why did you discard it? A. We were looking for ideas, ways and means of doing this. We dipped the end of the stem or tubing in various chemicals with the idea of forming a skin over the apertures. We tried to reduce the size of the breathing mechanism holes to a point where they would permit passage of air and not—and prohibit the passage of liquids.

We plugged the end of the tubing. We attempted to use the bayonet type of lock, then used in the manufacture of dispensers, in order to make them leak-proof, and we capped the spray nozzle. Samples of this latter method

were [1010] submitted to various customers but found by them to be still wanting.

Q. Did you find any of your various and sundry efforts along that line to be satisfactory to any of your customers? A. Yes in the case of the dispensers but no in the case of the sprayer.

Q. When you say "the dispenser" are you speaking of the bayonet type? A. Yes. With the bayonet type—yes, with the cap on the end of the spout.

Q. This cap was merely for the purpose of closing the orifice, is that what you are saying? A. Yes.

Q. Was that idea ever accepted by any customer who used the sprayers for dispensing of insecticides, for example? A. No.

Q. Or for any other product that is not viscous in nature, such as lotions? A. No, not to any extent.

* * *

[1011] A. I don't know. I really don't know. We were looking for any way to solve it. One idea very often leads to another. I would be simply guessing.

Naturally when we look for ways and means to do anything particularly on that—on the sprayer device, it costs so little in the beginning compared with the work that is in it, we would give a great deal of attention to—I mean, it would just have to be—in order to be practical it would have to be an economical, inexpensive way, something that we could incorporate into something that we already had. This is what we were continually striving to do.

Our object, our main object, with any of our customers was to try and produce an article that they could use that would be so inexpensive to them that they could give it away with each and every bottle of their product. This is the thing we were continually striving to do, because in this way we could increase our production volume.

Q. Prior to the time that Cook became a customer of Calmar and commenced giving the sprayers away with its product, was there any large-scale use of plastic sprayers as a give-away item along with the product? [1012] A. Yes. There was intermittently by people who made deals. I think there were times when the Union Oil Company

offered a sprayer and a bottle for a certain price as a unit. However, they were not packaged together.

The first actual customer in a large way to do this, that I can recall, perhaps is the manufacturer of the product Nil. They used to run full-page ads of their product, which I believe was a deodorant, in which they would advertise a container full of this chemical plus a sprayer for so much money. They built up their sales volume in this manner very quickly.

In fact, it amazed us. I think as far as dispensers were concerned, the Colgate Company used about five million of our dispensing units. These were the bayonet-type of dispenser, used in connection with the sale of their hand lotion. This is one of the early single-unit packages that I recall. There were others, not so large, that I don't recall.

Q. Would you say, then, that the need for packaging the sprayer with the container as an integral part of the container was present, then, long before the request to you by Cook Chemical for such a product? A. A need for this has always existed, as far as I am concerned. Perhaps the full need was never realized, but there certainly was a place for it as evidenced by the fact that it is now common practice.

[1013] Q. Did that need become more apparent to you when the request was made by Cook? A. Yes, it was, certainly.

* * *

[1014] Q. Now let's go back to this. The only sprayer with which you had any connection during your employment with these companies, which was adapted to be put in a bottle, was the S-25 LP; isn't that correct? A. I don't know what that means. If I ever did, I have forgotten.

Q. There was a sprayer, and I think the same structure was used in the dispenser which had an "O" ring in it. Does that strike a responsive chord? There was a bayonet joint. I think that is the term you used. A. Yes, yes, this is the dispenser (indicating).

Q. That is the one you are talking about? A. Yes.

* * *

# United States Court of Appeals

FOR THE EIGHTH CIRCUIT

---

## No. 17,540.

CIVIL.

CALMAR, INCORPORATED,
*Appellant,*

vs.

COOK CHEMICAL COMPANY,
*Appellee.*

---

## No. 17,541.

CIVIL.

COLGATE-PALMOLIVE COMPANY,
*Appellant,*

vs.

COOK CHEMICAL COMPANY,
*Appellee.*

---

APPEALS FROM THE UNITED STATES DISTRICT COURT FOR THE WESTERN DISTRICT OF MISSOURI.

---

INDEX

VOLUME OF EXHIBITS

Index to Exhibits


Plaintiff's Exhibits ..... 341

C, (Scoggin Deposition Exhibit 67), Defendant's Circular to Trade, November, 1959 ..... 341

E, (Scoggin Deposition Exhibit 13), Application for Scoggin Patent in Suit ..... 347

F, Claim 18 of Scoggin Application Viz-a-Viz Claim 25 (Claim 1 of Patent in Suit) ..... 379
G, Photograph of Large Scale Model of Device of Patent in Suit, Scoggin Patent No. 2,870,943 ..... 381
G-1, Photograph of Model (Exhibit G) with Pump Plunger Removed ..... 383
H, Letters Patent No. 2,715,480 to J. G. Livingstone, August 16, 1955 ..... 385
I, Letters Patent No. 2,763,402 to J. G. Livingstone, September 18, 1956 ..... 390
J, Preliminary Sketch of Bakan 2 Sprayer Parts ..... 396
L, (Scoggin Deposition Exhibit No. 40), Memorandum from Chester M. Turner to Baxter I. Scoggin et al. ..... 397
M, (Scoggin Deposition Exhibit No. 37), Preliminary Sketch of Bakan 2 Sprayer, February 11, 1957 ..... 399
P, Drawing of Bakan 1 Sprayer ..... 401
Q, Drawing of Bakan 2 Sprayer ..... 403
S, Drawing of Bakan 3 Sprayer ..... 405
T, Letters Patent No. 2,119,884 to F. W. Lohse, June 7, 1938 ..... 407
U, Letters Patent No. 2,586,687 to R. Mellon, February 19, 1952 ..... 410
V, Letters Patent No. 2,861,839 to R. Mellon, November 25, 1958 ..... 414
Y, Letters Patent No. 2,434,875 to F. M. Turnbull et al., January 20, 1948 ..... 419
DD, Defendant's Advertising—Bakan 2 Sprayer ..... 429
EE, Defendant's Advertising—Bakan 2, Modified Sprayer 431
FF, Defendant's Advertising (1961) Omitting Reference to Bakan 2 Sprayer ..... 433
GG, Defendant's Advertising—Bakan 3 Sprayer ..... 438
HH 1-13, Photographs of Physical Exhibits Illustrating Various Packaging Methods ..... 440
II, Summary of Sales in 1958 of Colgate's Insecticide with Sprayer on Side of Bottle ..... 454
JJ, Enlarged Drawing of Livingstone Patent No. 2,751,480 455
KK, Enlarged Drawing of Mellon Patent No. 2,586,687 ..... 457
MM, Letters Patent No. 2,844,290 to W. J. Slade, July 22, 1958 ..... 459
NN, Letters Patent No. 2,118,222 to O. G. Nilson, May 24, 1938 ..... 462
OO, Letters Patent No. 1,447,712 to J. W. Darley, Jr., March 6, 1923 ..... 468
PP, Photograph of Large Scale Model of Accused SS40 Sprayer ..... 471
PP-a, Photograph of Large Scale Model of Accused SS40 Sprayer ..... 473
QQ, Drawing of Accused SS40 Sprayer ..... 475
VV, Drawing of SS40 Sprayer ..... 477

YY, (Scoggin Deposition Exhibit No. 27) Drawing of Accused SS40 Sprayer ..... 479
ZZ, Stipulation Concerning Commercial Sprayers ..... 480
AB, Letters Patent No. 3,064,865 to B. I. Scoggin et al., November 20, 1962 ..... 496
AC, Excerpts from Scoggin et al. Application 835,680 (Patent No. 3,064,865) ..... 501
AD, Excerpts from Forfeited Scoggin et al. Application No. 789,902 ..... 504

Defendant's Exhibits ..... 510
10, Letters Patent No. 2,870,943 (Patent in Suit), to B. I. Scoggin, Jr., January 27, 1959 ..... 510
31, Photograph of Austin Window Cleaner with Bakan 3 Sprayer ..... 513
31-A, Photograph of Austin Window Cleaner with Bakan 3 Sprayer-Overcap Removed ..... 514
33, Photograph of Austin Window Cleaner—Earlier Package Without Sprayer ..... 515
35, Summary of Sales by Austin (1957-1962) ..... 516
90, Drawing of Bakan 2 Modified Sprayer ..... 517
94, Chart #1—Fishleigh ..... 519
110, Photomicrograph of Defendant's Exhibit 102 ..... 521
112, Photomicrograph of Defendant's Exhibit 104 ..... 522
114, Photomicrograph of Defendant's Exhibit 106 ..... 523
116, Photomicrograph of Defendant's Exhibit 108 ..... 524
118, Drawings Prepared from Defendant's Exhibits 110, 112, 114 and 116 ..... 525
120, Chart #2—Fishleigh ..... 527
121, Letters Patent No. 2,956,509 to R. C. Cooprider and Douglas F. Corsette, October 18, 1960 ..... 529
150, Sketch of Boot for Sprayer ..... 537
160, Memorandum by Davis (Calmar)—March, 1958 ..... 538
162, Memorandum by Davis (Calmar)—May, 1958 ..... 540
198, Notes on Calmar Development Committee Meeting, December 18, 1957 ..... 541
200, Memorandum—Wise to Department Heads, November 20, 1958 ..... 544
202, Memorandum by Wise to W. H. Harnage, March 31, 1958 ..... 550
210, Photograph of Scoggin Experimental Closure Cap ..... 551
224, Chart #3, Fishleigh ..... 553

| | Original | Print |
|---|---|---|
| Proceedings in the United States Court of Appeals for the Eighth Circuit | 555 | 555 |
| Opinion, Mehaffy, J. | 555 | 555 |
| Judgment | 565 | 564 |
| Petition of appellants for rehearing en banc under this Court's Rule 15 | 566 | 565 |
| Order denying petition of appellants for rehearing en banc | 578 | 577 |
| Order denying motion of appellants to recall and stay issuance of mandate | 579 | 577 |
| Clerk's certificate | 580 | 578 |
| Orders allowing certiorari | 581 | 579 |

[1015] PLAINTIFF'S EXHIBIT C.

BAKAN PLASTICS

Division of Cook Chemical Company

P. O. Box 78 2500 Summit Kansas City 41, Missouri

Phone VIctor 2-8092

November, 1959

(Scoggin Deposition Exhibit No. 67. 4/12/60)

Re: Re-designed and Re-engineered Model 2 Leak Proof Sprayer

I am sure you will be interested in seeing our new leak proof sprayer equipped with a new cap and collar. This new cap and collar has the following advantages:

1. The cover cap can be tightened to a uniform torque at our plant—this eliminates extra cost for our customers.
2. This new cover cap is designed so that it makes a perfect seal on the collar—which the old one would not do.
3. This cover cap has more eye appeal—than the old one. This unit can be equipped with a cap 24mm or larger. We recommend that the customers should use a cap 26 mm or larger, because the O. D. of the cover cap is larger than the O. D. on a 24mm, as an example. In other words, if the base cap has a smaller O. D. than the cover cap, it makes it impossible to tighten the metal cap unless they have a special capper.

We are now in production and all sprayers manufactured from now on will be equipped with this new cap and collar. Our engineering department is also re-designing and re-engineering the head mold, the orifice mold, and the plunger mold and we expect to have this work done by January 1st—possibly sooner. With this new development, we will be able to furnish you a completely leak proof sprayer, which will eliminate any leakage back into the cap.

[1016] We are mailing you the samples now, so that you can see how we are improving this unit, which will be a real help to you. I might also add that this sprayer is covered by patent number 2,870,943.

Of course, our sales representative, the
will be glad to answer any questions you may have regarding this unit.

Yours very truly,
BAKAN PLASTICS
/s/ Jim Groebe
Jim Groebe
Sr. Vice President

JG:lg

P.S.—Enclosed you will find catalog pages which illustrate both model 1 and model 2 sprayers—long and short stroke—which will give you prices on either unit. We are also enclosing samples of our model 1.

# BAKAN
## MODEL 2 LEAKPROOF
## SPRAYER

343

MC . 2 PLASTIC SPRAYER

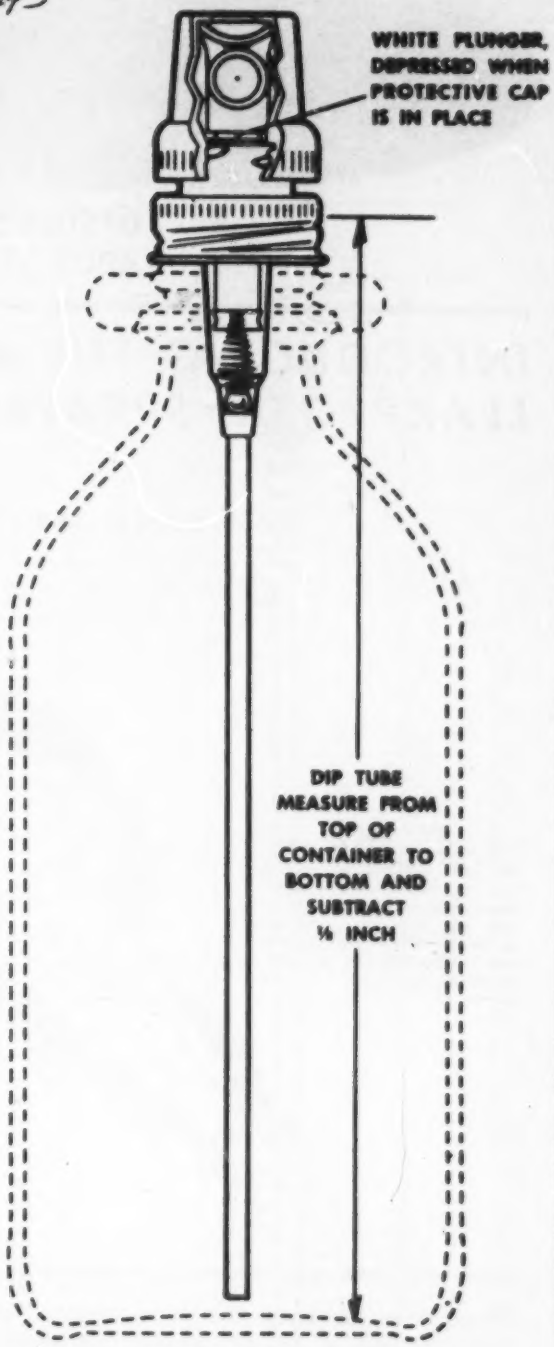


### PRICES

| QUANTITY | PRICE PER THOUSAND |
|---|---|
| 1,000 | $84.00 per thousand |
| 5,000 | 81.00 per thousand |
| 10,000 | 79.00 per thousand |
| 25,000 | 77.00 per thousand |
| 50,000 | 76.00 per thousand |
| 100,000 and up | Annual Contract quoted on request |

### TERMS

TERMS: 1% 10 Days — Net 30
F.O.B. Kansas City, Missouri
MINIMUM ORDER: 1,000 Sprayers to case
CASE WEIGHT: 34 lbs.

### COLORS:

ALL WHITE or WHITE plunger with RED, BLUE, GREEN or YELLOW head and collar. Be sure to specify color when ordering.

Special color combinations available in quantities of 100,000 or more prices quoted on request.

### CAPS:

Available in stock in following sizes and colors:

WHITE METAL—20, 22, 24, 26, 28, 33mm, 400 finish
BLUE METAL—26 & 28mm
YELLOW METAL—28mm
BLACK BAKELITE—24 & 28mm—$3.00/M extra
WHITE UREA—24 & 28mm—$6.00/M extra

Bakan can furnish metal or molded caps in any size or color in quantities of 100,000 or more. Prices quoted on request.

If customer furnishes molded caps, there will be a boring charge of $1.50/M.

### DIP TUBES:

Dip tubes will be cut to any desired length at no additional cost. When ordering specify over-all length from top of container to desired length. Please submit sample bottle or container to insure accuracy.

NOTE: When ordering be sure to specify: Model Number, Cap size and color, Sprayer color, Dip Tube length, Plunger (standard or short).

### NEW SHORT STROKE PLUNGER NOW AVAILABLE

Bakan sprayers may now be equipped with the new short stroke plunger which delivers less volume and is specifically designed for products such as window cleaners, spot removers, hair sprays, etc.

The standard, long stroke plunger is ideally suited for insecticides and other products where delivery of greater volume per stroke is desired.

When ordering specify short plunger if desired. Unless otherwise specified, sprayers will be equipped with standard, long stroke, plunger.

344

PRECISION MADE

# Sprayers and Dispensers

**DESIGNED FOR HIGH QUALITY, AT LOW COST ADDS STYLE AND PERFORMANCE TO ANY PRODUCT**

## INTRODUCING THE BAKAN MODEL 2 LEAKPROOF SPRAYER:

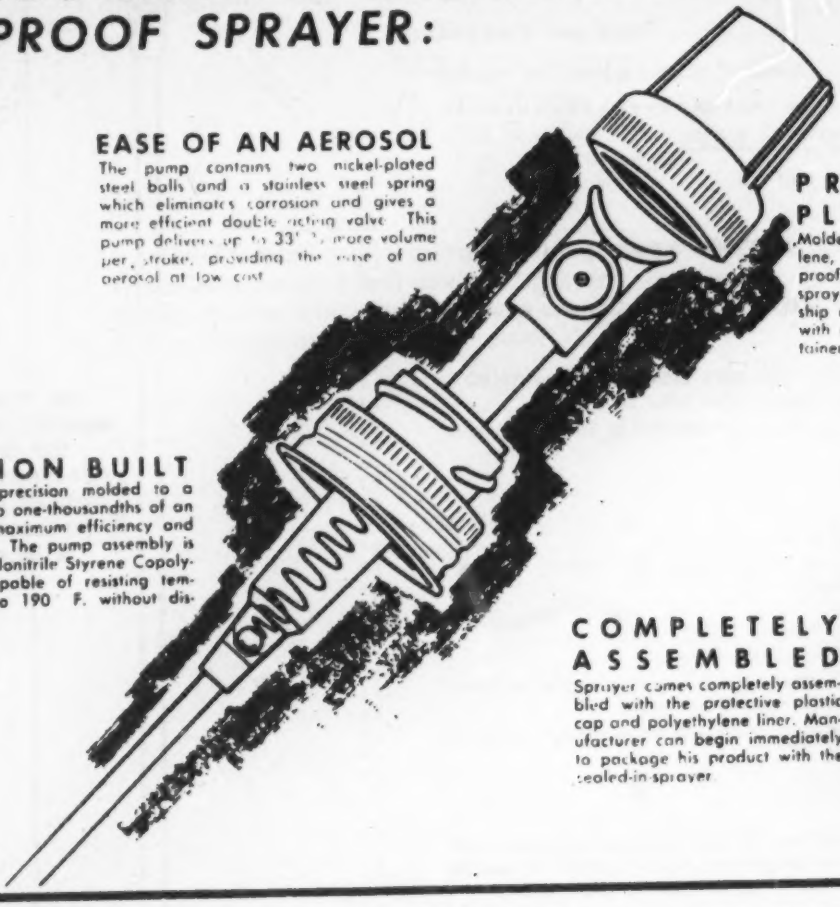

### EASE OF AN AEROSOL

The pump contains two nickel-plated steel balls and a stainless steel spring which eliminates corrosion and gives a more efficient double acting valve. This pump delivers up to 33⅓% more volume per stroke, providing the ease of an aerosol at low cost.

### PROTECTIVE PLASTIC CAP

Molded of high quality polyethylene, it provides a sealed, leakproof, protective cover for the sprayer. Enables manufacturer to ship and merchandise his product with a sprayer sealed in the container—ready to use.

### PRECISION BUILT

All parts are precision molded to a tolerance of two one-thousandths of an inch, insuring maximum efficiency and operating ease. The pump assembly is molded of Acrylonitrile Styrene Copolymer (TYRIL) capable of resisting temperatures up to 190° F. without distortion.

### COMPLETELY ASSEMBLED

Sprayer comes completely assembled with the protective plastic cap and polyethylene liner. Manufacturer can begin immediately to package his product with the sealed-in sprayer.

**NOTE:** Model 2 Leakproof Sprayers, identified as "Sprayers with Protective Caps" are patented under U.S. Letters Patent No. 2,870,943

The plastic components of the BAKAN Model 2 Leakproof Sprayer is compatible with most chemicals where sprayers are commonly used. It is suggested, however, that each product be thoroughly tested with the sprayer to make sure they are compatible.

***distributed by:***

**BAKAN** 2500 SUMMIT KANSAS CITY 41

# BAKAN

345

## MODEL 1 SPRAYER

### PRICES

| QUANTITY | PRICE PER THOUSAND |
|---|---|
| 1,000 | $74.00 per thousand |
| 5,000 | 71.00 per thousand |
| 10,000 | 69.00 per thousand |
| 25,000 | 67.00 per thousand |
| 50,000 | 66.00 per thousand |
| 100,000 and up | Annual Contract quoted on request |

### TERMS

TERMS: 1% 10 Days — Net 30
F.O.B. Kansas City, Missouri
MINIMUM ORDER: 1,000 Sprayers
PACKED: 1,000 Sprayers to case
CASE WEIGHT: 28 lbs.

**COLORS:**

ALL WHITE or WHITE plunger with RED, BLUE, GREEN or YELLOW head and collar. Be sure to specify color when ordering.

Special color combinations available in quantities of 100,000 or more Prices quoted on request.

**CAPS:**

Available in stock in following sizes and colors:

WHITE METAL—20, 22, 24, 26, 28, 33mm, 400 finish
BLUE METAL—26 & 28mm
YELLOW METAL—28mm
BLACK BAKELITE—24 & 28mm—$3.00/M extra
WHITE UREA—24 & 28mm—$6.00/M extra

Bakan can furnish metal or molded caps in any size or color in quantities of 100,000 or more. Prices quoted on request.

If customer furnishes molded caps, there will be a boring charge of $2.50/M.

**DIP TUBES:**

Dip tubes will be cut to any desired length at no additional cost. When ordering specify over-all length from top of container to desired depth. Please submit sample bottle or container to insure accuracy.

**NOTE:** When ordering be sure to specify: Model Number, Cap size and color, Sprayer color, Dip Tube length, Plunger (standard or short).

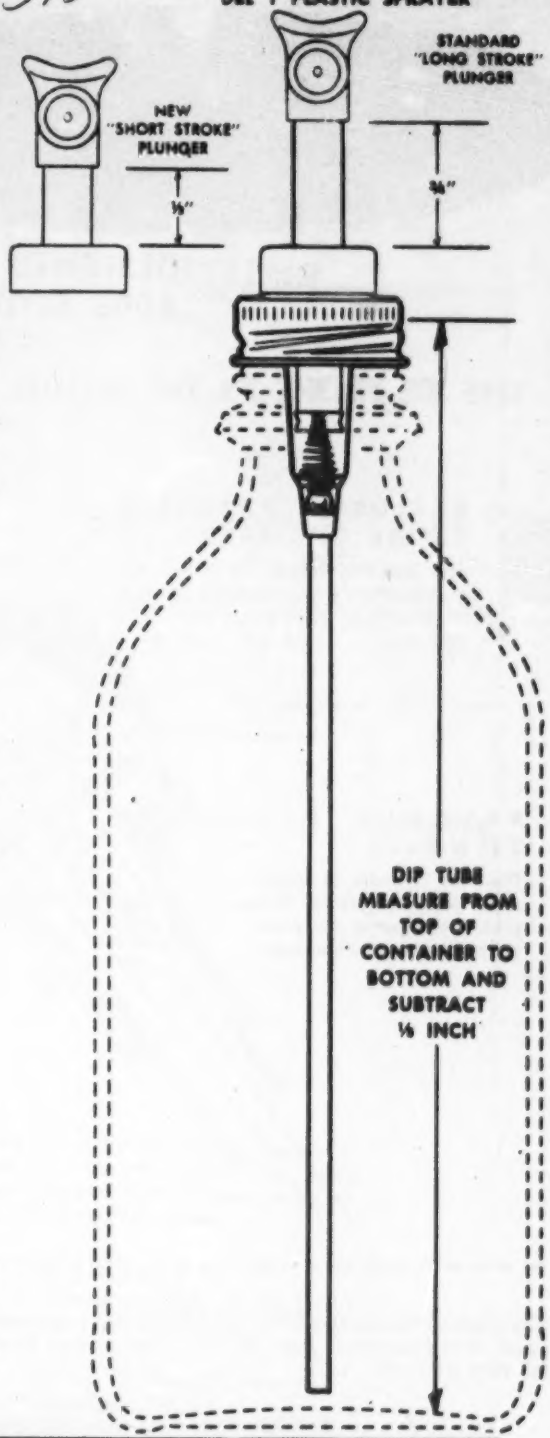


**NEW SHORT STROKE PLUNGER NOW AVAILABLE**

Bakan sprayers may now be equipped with the new short stroke plunger which delivers less volume and is specifically designed for products such as window cleaners, spot removers, hair sprays, etc.

The standard, long stroke plunger is ideally suited for insecticides and other products where delivery of greater volume per stroke is desired.

When ordering specify short plunger if desired. Unless otherwise specified, sprayers will be equipped with standard, long stroke, plunger.

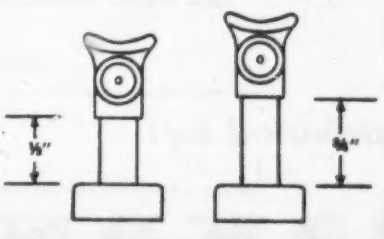

346

PRECISION MADE

# Sprayers and Dispensers

**DESIGNED FOR HIGH QUALITY, AT LOW COST**
**ADDS STYLE AND PERFORMANCE TO ANY PRODUCT**

## THE BAKAN MODEL 1 PLASTIC SPRAYER . . .

### EXCLUSIVE PATENTED SWIRL CHAMBER . . .

This patented feature built into the high-pressure pump assembly, gives a more uniform particle size and spray pattern.

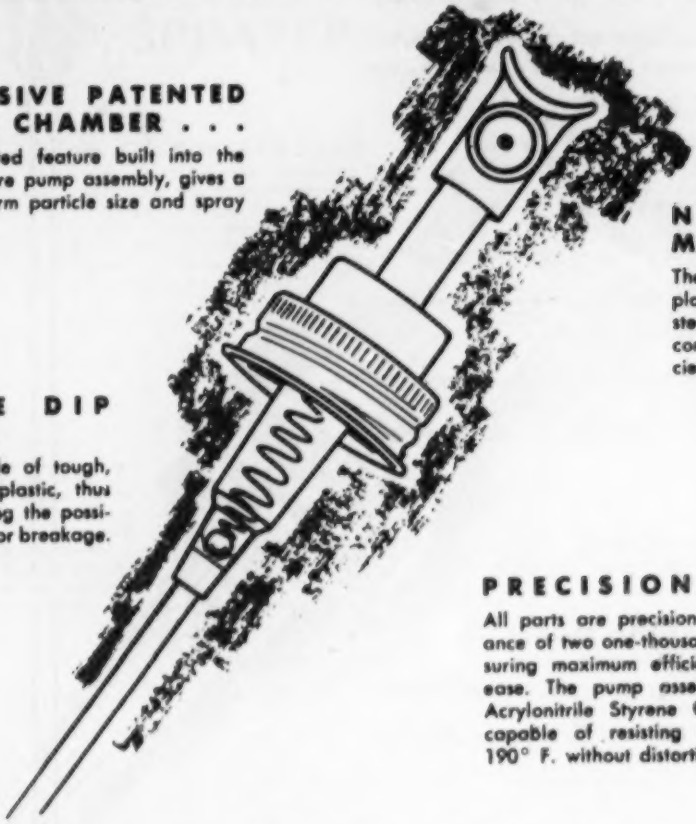

### NON CORROSIVE METAL PARTS...

The sprayer contains two nickel-plated steel balls and a stainless steel spring, which eliminates corrosion and gives a more efficient, double-acting valve.

### PLIABLE DIP TUBE...

The tube is made of tough, semi-rigid vinyl plastic, thus greatly eliminating the possibility of damage or breakage.

### PRECISION BUILT...

All parts are precision molded to a tolerance of two one-thousandths of an inch, insuring maximum efficiency and operating ease. The pump assembly is molded of Acrylonitrile Styrene Copolymer (TYRIL) capable of resisting temperatures up to 190° F. without distortion.

---

The plastic components of the BAKAN Model 1 sprayer is compatible with most chemicals where sprayers are commonly used. It is suggested, however, that your product be thoroughly tested with the sprayers to make sure they are suitable for your product.

BAKAN offers your company specialized laboratory analysis and will develop and design special sprayers or dispensers to fit your product and package.

***distributed by:***

**BAKAN** Plastics 2500 SUMMIT

PLAINTIFF'S EXHIBIT E

347

| | | | |
|---|---|---|---|
| 643711 SERIAL NO. (Series of 1948) | P. R. Div. | | PATENT NUMBER 2870943 |
| Patent examiner | Class | Subclass | DATED JAN 27 1959 |
| Division No. | Filed complete (Date) MAR 4, 1957 | Serial No. 643 711 | CLAIMS FOREIGN PRIORITY Country / Date |

Applicant(s)

OGGIN, BAXTER I. JR., ~~SE~~ KANSAS CITY, MO.

24

| Number claims allowed | Print claim(s) | Class | Subclass |
|---|---|---|---|
| 4 | 1 | 222 | 182 |

By mesne assigns,
~~Kahan Plastic, Inc., Independence, Mo., a corp.~~
~~Missouri~~ Cook Chemical Company, Kansas City, Mo., a corp. of Missouri.

Title of invention

MP-TYPE LIQUID SPRAYER HAVING HOLD-DOWN

☐ Division of ☐ Continuation of ☐ Substitute for abandoned ☐ Continuation-in-part of

| APPLICATION | | APPLICATION |
|---|---|---|
| Serial No. | Filed | Serial No. |
| Now Patent No. | Granted | Filed |

| Extra claims | Filing fee | Transaction | Atty's docket |
|---|---|---|---|
| | $30 | 22300 | 7542 |

This is to certify that annexed hereto is a true copy from the records of the United States Patent Office of File Wrapper and Contents of the file identified above.

By authority of the
COMMISSIONER OF PATENTS

H. G. Lankamp
Certifying Officer

Date September 22, 1959

348

| 643711 SERIAL NO. (Series of 1948) | P. R. Div. | | PATENT NUMBER 2870943 |
|---|---|---|---|
| Assistant examiner | Class | Subclass | DATED JAN 27 1959 |
| Division No. 35 | Filed complete (Date) MAR 4, 1957 | Serial No. 643 711 | CLAIMS FOREIGN PRIORITY Country / Date |

Applicant(s)

SCOGGIN, BAXTER I., JR., OF KANSAS CITY, MO.

2d

| Number claims allowed | Print claim(s) | Class | Subclass |
|---|---|---|---|
| 4 | 1 | 222 | 182 |

Assignee by mesne assignor, ~~Baker Plastics, Inc., [illegible] of Missouri~~ Cook Chemical Company, Kansas City, Mo., a corp. of Missouri.

Title of invention

PUMP-TYPE LIQUID SPRAYER HAVING HOLD-DOWN CAP

☐ Division of ☐ Continuation of ☐ Substitute for abandoned ☐ Continuation-in-part of

| APPLICATION | | APPLICATION |
|---|---|---|
| Serial No. | Filed | Serial No. |
| Now Patent No. | Granted | Filed |

| Sh. drw. | Extra claims | Filing fee | Transaction | Atty's docket |
|---|---|---|---|---|
| 1 | | $30 | 22300 | 7542 |

Send correspondence to:

C. EARL HOVEY
FEDERAL RESERVE BANK BLDG
KANSAS CITY 6, MO.

123

Principal attorney(s)

C. EARL HOVEY

Associate attorney(s)

PARTS OF APPLICATION FILED SEPARATELY

PREPARED FOR ISSUE

(Assistant Examiner) (Docket Clerk)

EXAMINED AND PASSED FOR ISSUE

(Primary Examiner) (Division)

NOTICE OF ALLOWANCE MAILED

FINAL FEE

| Date | Amount |
|---|---|
| NOV 26 1958 | $30 |

[THIS SPACE RESERVED FOR RETENTION LABEL]

[THIS SPACE RESERVED]

L

Form PO-[illegible] (7-1-45)

10—11378a-3

PLAINTIFF'S EXHIBIT E

[1023]

C. EARL HOVEY
Attorney at Law

United States & Foreign
Patent, Trademark & Copyright
Causes Exclusively

Gordon D. Schmidt
Donald E. Johnson
Robert D. Hovey

Telephones VIctor 2-2177
VIctor 2-2459
1001-3 Federal Reserve Bank Bldg.
Kansas City 6, Missouri

March 1, 1957

Hon. Commissioner of Patents
Washington 25, D. C.

Sir:

Enclosed herewith please find the complete application for Letters Patent of BAXTER I. SCOGGIN, JR., covering improvements in PUMP-TYPE LIQUID SPRAYER HAVING HOLD-DOWN CAP.

The filing fee in the form of a check from the Attorney in the case and drawn to the amount of $30.00 is attached hereto.

Please forward the filing receipt to this office at your early convenience.

Respectfully submitted,

/s/ C. Earl Hovey
Attorney for Applicant

CEH:lb-
Encl.

## [1024] PUMP-TYPE LIQUID SPRAYER HAVING HOLD-DOWN CAP

This invention relates to improvements in structures for dispensing liquids wherein is provided a spray-type hand pump mounted within a container for the liquid through use of the closure cap of such container.

It is common practice, as exemplified for example by Patent No. 2,362,080, issued November 7, 1944, to dispense various types of liquids such as insecticides, through use of a finger-manipulated spray pump normally sold as a component part of the container itself. The pump includes a vertically reciprocable plunger extending upwardly beyond the top of the cap within which the pump is mounted and provided with a spray head or nozzle structure capable of emitting a fine mist-like spray when the plunger is depressed by engagement with a finger-receiving saddle forming a part of the spray head.

Difficulties have been experienced in the field by virtue of the inherent nature of such structure since accidental actuation of the plunger causes dispensing of the fluid and oftentimes the material is used in part by store employees prior to sale because of the ready accessibility to the pump itself.

It is the most important object of the present invention, therefore, to provide structure for rendering the pump inoperable during shipment and while in storage, as well as on the shelves of the retail dealer.

[1025] Another important object of the present invention is to provide structure capable of carrying out the functions above set forth which is also adapted to enclose the head of the plunger and thereby protect the same, as well as handlers of the merchandise by virtue of the fact that the said plunger is completely enclosed and held at the innermost end of its reciprocable path of travel.

A further object of the instant invention is to provide a hold-down cap that may be quickly and easily applied and removed by virtue of a releasable attachment to a part of the entire unit such as by use of screw-threaded interengagement therewith.

A further object of this invention is to provide improvements of the aforementioned character that advantageously employs a part of the unit which has a secondary function of attaching the barrel of the spray pump to the closure cap of the container.

Other objects include important details of construction to be made clear or become apparent as the following specification progresses, reference being had to the accompanying drawing, wherein:

Figure 1 is a fragmentary, elevational view of a liquid container showing a pump-type sprayer as a part thereof and including the novel hold-down cap of the instant invention, parts being in section for clearness.

Fig. 2 is a fragmentary, vertical, cross-sectional view through the container and its cap showing the pump assembly in its operable position with the hold-down cap removed; and

[1026] Fig. 3 is an exploded perspective view showing the hold-down cap and certain parts of the sprayer with which the same is operably associated.

Pump-type sprayer 10 for liquid container 12 is attached to cap 14 for retention thereby when cap 14 is removed from threaded neck 16 of container 12, and if desired, there may be provided sufficient clearance between cup-shaped retainer 18 and annular outturned flange 20 to permit rotation of cap 14 relative to sprayer 10.

Both cap or closure 14 and retainer 18 are received by a cylindrical extension 22 of frusto-conical barrel 24, forming a part of the sprayer 10, extension 22 being integral with flange 20 at the innermost edge of the latter. Flange 20 is integral with barrel 24 near the larger, uppermost edge of the latter and is held against the under side of gasket 38 in the cap 14 when the sprayer 10 is operably associated with container 12.

Retainer 18 is provided with a central opening 25 which receives tubular plunger 26 and has a cavity 27 that accommodates the enlarged extension 22 as is clear in Fig. 2. Retainer 18 is fitted tightly over the extension 22 and maintains the retainer in place with flange 20 against gasket 38 as above set forth.

Reduced end 28 of barrel 24 receives a tube 30 that extends to the bottom of container 12, it being understood

that the sprayer 10 is internally constructed in a suitable manner as, for example, in accordance with teachings of the aforementioned patent to pump liquid [1027] from the container 12 into the tube 30 and thence through nozzle 32 forming a part of a spray head 34 secured to the upermost end of plunger 26. The enlarged head 34 is normally depressed by one finger as the operator grasps the container 12 as is well understood in this art.

Cap 14 has a clearance opening 36 therein, as best shown in Fig. 2, for the extension 22 of barrel 24 and when the cap 14 is in screw-threaded engagement with neck 16, the gasket 38 which surrounds barrel 24, is clamped tightly between flange 20 and the under side of the top of cap 14.

A hold-down member broadly designated by the numeral 40, is provided to hold the plunger 26 at the lowermost end of its path of travel within the barrel 24 in the manner illustrated by Fig. 1, it being understood as by reference to said patent, that a spring (not shown) within the barrel 24, yieldably biases the plunger 26 upwardly to the position shown in Fig. 2. The hold-down member 40 is preferably in the nature of a hollow cap so that the same not only encloses or houses the upper end of plunger 26, i. e. spray head 34, but releasably attaches to the retainer 18 and also houses the latter.

A cylindrical bore 42 within the hold-down cap 40 receives the head 34 as seen in Fig. 1, and enlargement of the bore 42 adjacent the lowermost open end of the cap 40 is provided with internal screw threads 44 that mesh with external screw threads 46 on the retainer 18, thereby releasably attaching the cap 40 to the retainer 18.

[1028] An enlarged, annular boss 48 on the cap 40 is provided with a ribbed, outermost surface to facilitate mounting and removal of the cap 40 relative to retainer 18. A downwardly-facing shoulder 50 within the cap 40 engages the upper surface of retainer 18, thereby preventing engagement between cap 40 and closure 14 to prevent forcing of the retainer 18 from its tight pressfit engagement with extension 22. As illustrated, the screw threads 46 on the retainer 18 are in the nature of a pair of substantially semi-circular, spirally arranged sections

52 and 54, permitting molding of the retainer 18 with its screw threads 46 as a single unitary part.

In addition to the seal provided between shoulder 50 and the top surface of retainer 18, there is established an additional annular seal between annular rib 56 and the annular surface of cap 40 immediately adjacent to shoulder 50. This seal is clearly illustrated in Figure 1. The cross-sectional contour of rib 56 is as shown in Fig. 2 to present an upwardly and inwardly inclined annular face which snugly fits against the "corner" or line of juncture between shoulder 50 and the adjacent annular inner face of cap 40.

The interfitting surfaces between extension 22 and retainer 18 are as illustrated in Fig. 2. There is an annular notch formed in extension 22 at the outer extremity thereof and this notch 58 receives a similarly formed, continuous annular projection 60 formed integrally with retainer 18 and at a point where elements 58 and 60 will interlock when the parts are in assembled condition.

[1029] Thus, any accidental leakage or seepage from container 12 through the parts after they are assembled is obviated.

The material from which retainer 18 is produced is soft enough to be slightly compressed when shoulder 50 and the corner adjacent thereto, rides along the upwardly and inwardly inclined outer face of rib 56 when cap 40 is moved to position.

[1030] Having thus described the invention what is claimed as new and desired to be secured by Letters Patent is:

1. In combination with a sprayer unit for a liquid container, said unit including a closure for the container, and a spray pump, secured to the closure, and provided with a reciprocable plunger; and a member holding the plunger at one end of its path of travel and releasably attached to said unit.

2. The invention as set forth in claim 1 wherein said member is hollow and houses a portion of the plunger.

3. The invention as set forth in claim 1, there being a screw-threaded attachment of the member to said unit.

4. In combination with a pump sprayer provided with a barrel and a plunger reciprocable within the barrel and

normally extending therebeyond; a hold-down member for holding the plunger depressed at the innermost end of its path of travel within the barrel; and releasable means attaching the member to the barrel.

5. The invention as set forth in claim 4, there being a screw-thread attachment of the member to the barrel.

6. The invention as set forth in claim 4 wherein is provided a collar on the barrel having a clearance opening for the plunger, the member being releasably attached to the collar.

[1031] 7. The invention as set forth in claim 4 wherein said member is hollow and houses the outermost end of the plunger when the member is attached to the barrel.

8. The invention as set forth in claim 7, the member being provided with internal screw threads and the barrel being provided with means presenting external screw threads receiving said screw threads of the member.

9. In combination with a pump sprayer provided with a barrel having a cap for a container mounted thereon and a reciprocable plunger extending above the cap; a retainer on the barrel for holding the cap thereon; and a hold-down member releasably attached to said retainer for holding the plunger depressed at the innermost end of its path of travel within the barrel.

10. The invention as set forth in claim 9 wherein said member is hollow and houses the retainer and the uppermost end of the plunger when attached to the retainer.

11. The invention as set forth in claim 10 wherein is provided intermeshing screw threads between the member and the retainer.

[1032] 12. In combination with a liquid container having a neck provided with a perforated closure; a pump spray having a barrel within the perforation of said closure and a pumping plunger reciprocable within the barrel and spring-biased toward the outermost end of its path of travel extending upwardly beyond the closure; means including a retainer on the barrel above the closure for holding the barrel attached to the closure; and a hollow cap releasably attached to said retainer and housing the uppermost end of the plunger for holding the latter at the lowermost end of its path of travel within the barrel.

13. The invention as set forth in claim 12 wherein said retainer comprises a collar surrounding the barrel and having a clearance opening for the plunger.

14. The invention as set forth in claim 13, said barrel having an outturned flange, the closure being clamped between the retainer and the flange.

15. The invention as set forth in claim 13, the cap housing the retainer and having screw-threaded connection therewith.

[1033] Sole

APPLICATION FOR UNITED STATES PATENT
Oath, Power of Attorney, and Petition

---

Being duly sworn, I BAXTER I. SCOGGIN, JR., depose and say that I am a citizen of The United States of America residing at 1223 West 66th Terrace, Kansas City, Missouri; that I have read the foregoing specification and claims and I verily believe I am the original, first, and sole inventor of the invention or discovery in PUMP-TYPE LIQUID SPRAYER HAVING HOLD-DOWN CAP described and claimed therein; that I do not know and do not believe that this invention was ever known or used before my invention or discovery thereof, or patented or described in any printed publication in any country before my invention or discovery thereof, or more than one year prior to this application, or in public use or on sale in the United States for more than one year prior to this application; that this invention or discovery has not been patented in any country foreign to the United States on an application filed by me or my legal representatives or assigns more than twelve months before this application; and that no application for patent on this invention or discovery has been filed by me or my representatives or assigns in any country foreign to the United States, except as follows:

No Exceptions

And I hereby appoint C. EARL HOVEY of Federal Reserve Bank Building, 925 Grand Avenue, Kansas City 6, Missouri. Registration No. 11,861, my attorney with full

power of substitution and revocation, to prosecute this application and to transact all business in the Patent Office connected therewith.

Wherefore I pray that Letters Patent be granted to me for the invention or discovery described and claimed in the foregoing specification and claims, and I hereby subscribe my name to the foregoing specification and claims, oath, power of attorney, and this petition, this 15th day of February, 1957.

| | | | |
|---|---|---|---|
| Inventor | Baxter | I. | Scoggin, Jr. |
| | First name | Middle initial | Last name |
| | Baxter | I. | Scoggin, Jr. |
| Post Office Address | 1223 West 66th Terrace<br>Kansas City, Missouri | | |

State of MISSOURI )
) SS
County of JACKSON )

Before me personally appeared BAXTER I. SCOGGIN, JR., to me known to be the person described in the above application for patent, who signed the foregoing instrument in my presence, and made oath before me to the allegations set forth therein as being under oath, on the day and year aforesaid.

/s/ Helen A. Moore
Seal Notary Public

My Commission Expires July 27, 1959

---

This form may be executed only when attached to a complete application as the last page thereof.

Approved Single Signature Form
Sole Inventor

357

#2
SN. 35

643711

NOV 18 1958

2,870,943

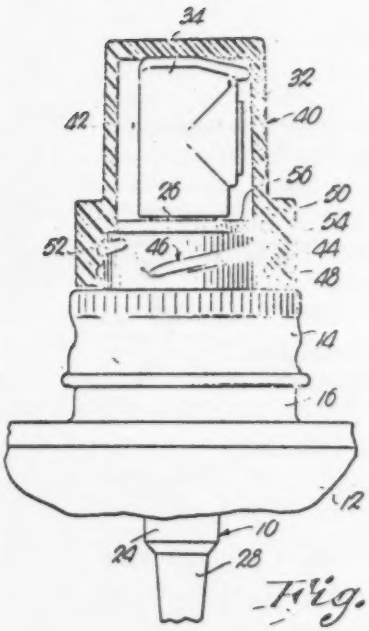


Fig. 1.

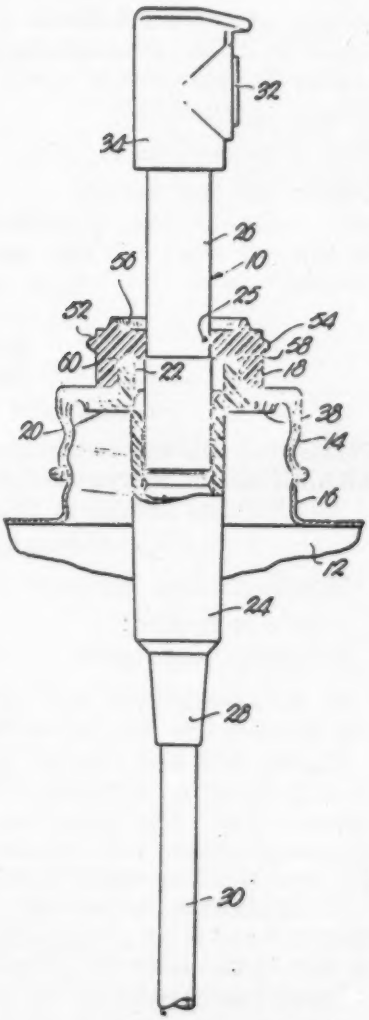


Fig. 2.

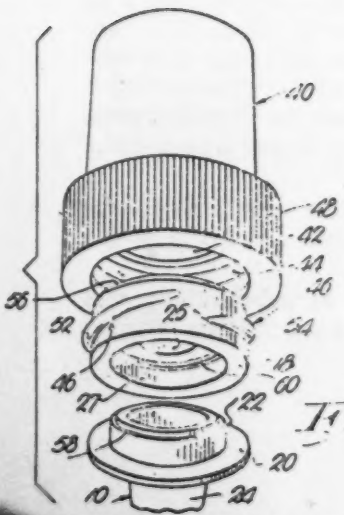


Fig. 3.

INVENTOR.
Baxter I. Scoggin
BY
ATTORNEY

[1035]

All communications respecting this application should give the serial number, date of filing, and name of the applicant.

U. S. DEPARTMENT OF COMMERCE
United States Patent Office
Washington

Paper No. 3

C. Earl Hovey
Federal Reserve Bank Bldg.
Kansas City 6, Mo.

Applicant: Baxter I. Scoggin, Jr.
Ser. No. 643,711
Filed March 4, 1957
For PUMP-TYPE LIQUID SPRAYER HAVING HOLD-DOWN CAP
Mailed Nov. 5, 1957 Pat. Div. 35

Please find below a communication from the EXAMINER in charge of this application.

/s/ Robert C. Watson
Commissioner of Patents.

This application has been examined.

Reference applied:

| | | | |
|---|---|---|---|
| 3 Lohse | 2,119,884 | June 7, 1938 | 222-182 |

In the specification, page 4, line 6, the clearance opening 36 cannot be located on the drawings.

Claims 1-11 are rejected as vague and indefinite, in that it cannot be determined what applicant considers as his invention. The claims purport to be drawn to a certain combination, but because of the particular punctuation employed in the independent claims, it is not clear what applicant considers old and what he considers new. Claims 4 and 9 are particularly vague in that a semi-colon is used in two different places.

Claim 6 is further rejected as vague and indefinite, there being no antecedent in the specification for the collar. It is believed this is the retainer 18.

Claims 1-11 are further rejected as substantially met by Lohse cited. There is shown the hold down member

12 releasably secured by screw threads to a retainer 4 which slidably houses a reciprocable plunger 6. It is not patentably significant [1036] in the absence of some new or unexpected result that the Lohse does not show the barrel 24 of applicant's device as continuing up to the top of the container since this barrel is part of the pump structure and is not seen to be essential to the essence of the present invention. Note therefore the barrel forming the piston chamber 16 of Lohse as being the full equivalent of applicant's barrel 24. It does not therefore appear to make any patentable difference whether the barrel is attached to the retainer and the plunger reciprocates therein, or is separate from the retainer and the plunger reciprocates through the retainer as seen in Lohse. The clamping nut 5 of Lohse performs the same function of holding the barrel in place as does the barrel extension of applicant's device.

All claims rejected.

/s/ L. J. Dumbo
Examiner

M.D.W.
MDWittstein:hej

[1037] IN THE UNITED STATES PATENT OFFICE
(Paper No. 4. May 5, 1958. Div. 35.)

| | | |
|---|---|---|
| Application of | ) | April 30, 1958 |
| BAXTER I. SCOGGIN, JR. | ) | |
| Serial No. 643,711 | ) | |
| Filed March 4, 1957 | ) | PAT. DIV. 35 |
| PUMP-TYPE LIQUID SPRAYER | ) | |
| HAVING HOLD-DOWN CAP | ) | |

Hon. Commissioner of Patents
Washington 25, D. C.
Sir:

Responsive to Office Letter of November 5, 1957, please amend the above-identified application as follows:

SPECIFICATION

Page 4, line 6, erase "36". Same line, after "therein" insert ....., as best shown in Fig. 2, .....

CLAIMS

Cancel Claims 1-15 inclusive.

Add the following claims:

16. In a cap for containers having a spray unit supported by the cap including a reciprocable plunger extending through the cap and provided with a spray head, the improvement of which comprises a retainer attaching the unit to the cap and provided with external screw threads; and a hollow member for housing the head and maintaining the plunger depressed, said member being screw-threaded on the retainer and provided with a continuous internal shoulder, said retainer [1038] having a continuous rib in complemental, circumscribing engagement with the shoulder and disposed to hold the member out of engagement with the cap, whereby to prevent displacement of the retainer from said unit when the member is attached to the retainer.

17. The invention as set forth in Claim 16, the inner-engaging surfaces of the shoulder and rib being wedge-shaped and the rib being yieldable whereby to present a liquid seal when the member is attached to the retainer.

## REMARKS

Claims 1-11 acted upon by the Honorable Examiner in the above mentioned Office Action have been cancelled as well as have Claims 12-15 which were not acted upon by the Honorable Examiner in said Office Action. Thus, new Claims 16 and 17 remain in this case for consideration.

Said claims clearly point out the novel features of Applicant's hold-down unit whereby the entire assembly is maintained in a predetermined position as shown in Fig. 1 and where the cap and hold-down assembly are rendered leak-proof by the particular manner in which retainer 18 and hold-down member 40 are inter-engaged.

The provision of a continuous internal shoulder within hold-down cap 40 which inter-engages in complemental, circumscribing relation with the rib provided along the upper edge of retainer 18 is clearly set forth in Claim 16. Such inner-engagement of the above mentioned parts prevents the hold-down member from being forced downwardly [1039] against cap 14 whereby the retainer would be pulled upwardly into the hold-down member and the retainer dislodged from its position on the cap which in turn would result in the barrel being dropped from its position of retention by retainer 18.

As further pointed out in Claim 17, the inner-engaging surfaces of the shoulder and the rib are so shaped as to present a liquid seal and thus insure that none of the contents of the bottle passes out of the hold-down member. This is particularly important inasmuch as when the barrel is initially depressed in packing the goods of a liquid nature there is a certain amount of the liquid which is retained upon nozzle 32 even after hold-down member 40 is inserted. Inasmuch as it is undesirable to have this liquid or for that matter, any liquid contained within the bottle upon which the assembly is placed, leak during transportation, display or warehousing of the merchandise, it is essential that a satisfactory seal be provided to prevent such leakage. This seal is particularly provided by the inner-engagement of the shoulder and the rib as pointed out in the claims now remaining in this case and it is believed that such construction is novel to Applicant's device.

Clearly, such a provision for the prevention of leakage is not shown by Lohse who attempts to accomplish such results by screwing his hold-down cap 12 tightly against gasket 3 which is held between the [1040] cap of the bottle and the hold-down cap for the nozzle. Inasmuch as it is not desired in Applicant's device to have the hold-down member come in contact with the cap of the bottle, for the reasons previously mentioned herein, Applicant has devised the new and novel sealing features as are now set forth in Claims 16 and 17. It is to be further noted that a tight seal is further insured by making retainer 18 of a material soft enough to be slightly compressed when shoulder 50 is brought to bear tightly against rib 56.

Inasmuch as none of the features now called for by Applicant are shown, or for that matter suggested by the references of record, it is respectfully submitted that this application is entitled to allowance when it is next reached for attention by the Honorable Examiner.

Respectfully submitted,

/s/ C. Earl Hovey

Attorney for Applicant

CEH:1b-5

362

[1041]

All communications respecting this application should give the serial number, date of filing, and name of the applicant.

U. S. DEPARTMENT OF COMMERCE
Patent Office
Washington

Paper No. 5

Applicant: Baxter I. Scoggin, Jr.
Ser. No. 643,711
Filed March 4, 1957
For PUMP-TYPED LIQUID SPRAYER HAVING HOLD-DOWN CAP
Mailed Oct. 1, 1958 Pat. Div. 35

C. Earl Hovey
Federal Reserve Bank Bldg.
Kansas City 6, Mo.

Please find below a communication from the EXAMINER in charge of this application.

/s/ Robert C. Watson
Commissioner of Patents.

Responsive to amendment filed May 1, 1958.

Additional references cited:

| | | | |
|---|---|---|---|
| 2 Nilson | 2,118,222 | May 24, 1938 | 222-538 |
| 5 Slade | 2,844,290 | July 22, 1958 (Filed July 27, 1955) | 222-542 x |

Cancellation of claims 1-15 is of record. The Examiner regrets the inadvertence of overlooking claims 12-15 in the prior Office action.

New claims 16 and 17 are rejected as unpatentable over Lohse of record, in view of either Slade or Nilson, both cited above. To provide the Lohse device with a rib or stop surface on the retainer 4 to cooperate with an inter-engaging shoulder or surface on the inside of the cap to prevent the cap from seating on the container cap is a feature old in the art, as shown by Slade or Nilson, the latter clearly in Fig. 5. Therefore, this modification of

Lohse does not require the exercise of invention. Also, the particular configuration of the inter-engaging surfaces is not of patentable significance, since the flat abutting surfaces of the Nilson and Slade devices will provide an effective seal, and are therefore the full equivalent of applicant's wedge-shaped surfaces.

Claims 1-15 canceled.

Claims 16-17 rejected.

[1042] IN THE UNITED STATES PATENT OFFICE

| | | |
|---|---|---|
| Application of | ) | November 1, 1958 |
| BAXTER I. SCOGGIN, JR. | ) | |
| Serial No. 643,711 | ) | PAT. DIV. 35 |
| Filed March 4, 1957 | ) | |
| PUMP-TYPE LIQUID SPRAYER | ) | |
| HAVING HOLD-DOWN CAP | ) | |

---

Hon. Commissioner of Patents
Washington 25, D. C.

Sir:

Responsive to Office Letter of October 1, 1958, please enter the following amendment in the above identified application.

CLAIMS

Cancel Claims 16 and 17.

Add the following claims:

18. In a closure assembly for an open-top container having a perforated cap over said open top thereof mounting a spray unit including a barrel, an extension passing coaxially through the perforation in said cap, a plunger reciprocably carried by the barrel and normally extending therebeyond and a spray head on the upper end of the plunger above said extension, the combination with said spray unit of an annular retainer secured to and surrounding the extension above said cap and provided with external, circumferentially disposed screw threads and an annular, continuous segment at the upper peripheral edge of the retainer above said screw threads, and a cup-shaped cap member housing the head and holding the plunger depressed at substantially the [1043] innermost

BEST COPY AVAILABLE

PUBLISHER'S NOTICE

Material on the following frames is
the best copy available to publisher.

path of travel thereof within the barrel, said member being provided with internal screw threads complementally engaging said screw threads on the retainer and having an internal, circumferentially extending, continuous shoulder disposed to engage said segment around the entire periphery thereof and thereby present a liquid tight seal located between the spray head and said threads on the retainer and said member respectively, said segment and the shoulder being disposed to maintain the lower peripheral margin of the member out of engagement with the cap when the segment and shoulder are in sealing interengagement.

19. A closure assembly as set forth in Claim 18 wherein one of the normally interengaged surfaces of the shoulder and segment respectively is substantially conical to present an inclined annular face coaxial with the member and said retainer and of sufficient diameter at the largest end thereof to cause the seal effected between the shoulder and said segment to become tighter as the shoulder slides on said segment during shifting of the member toward the cap.

20. A closure assembly as set forth in Claim 19 wherein said retainer is provided with a continuous, annular rib integral with the normally upper edge thereof and defining said segment, said rib having an outwardly facing, inclined surface presenting said conical face and of greatest external diameter at the zone of juncture of the rib with the retainer, said member having a pair [1044] of inner, coaxial, longitudinally spaced, cylindrical surfaces, the innermost cylindrical surface having a smaller diameter than the outermost cylindrical surface and presenting said shoulder therebetween lying in a plane perpendicular to the axes of said cylindrical surfaces, the diameter of said innermost cylindrical surface of the member being intermediate the diameters of opposed external end margins of said rib.

21. A closure assembly as set forth in Claim 20 wherein the member and retainer are constructed of materials having different coefficients of hardness whereby one of the interengaged faces of the rib and said shoulder respectively is deformed as the member is shifted toward the cap to thereby produce a more effective seal therebetween.

22. A closure assembly as set forth in Claim 18 wherein said cap member is of sufficient length to hold the spray

head in relatively close proximity to and spaced from the retainer when said shoulder and the segment are in interengagement.

23. In a closure assembly for an open-top container having a perforated cap over said open top thereof mounting a spray unit including a barrel, an extension passing coaxially through the perforation in said cap, a plunger reciprocably carried by the barrel and normally extending therebeyond and a spray head on the upper end of the plunger above said extension, the combination with said spray unit of an annular retainer [1045] secured to and surrounding the extension above said cap and provided with a pair of external, non-overlapping, opposed, substantially semi-circular, spirally arranged screw thread sections on the outer surface of said retainer, and a cup-shaped member housing the head and holding the plunger depressed at the innermost path of travel thereof within the barrel, said member being provided with at least a pair of overlapping courses of screw threads complementally engaging said screw thread sections on the retainers, said courses of screw threads commencing adjacent the outermost peripheral margin of the member at diametrically opposed points whereby both courses of screw threads engage said screw thread sections on the retainer substantially simultaneously during assembly of the member and said retainer and thereby cause the member to be pulled down evenly toward said retainer and into a locked position with only a quarter turn of the member relative to the retainer being required.

24. A closure assembly as set forth in Claim 23 wherein corresponding ends of the screw thread sections lie in respective, parallel, spaced planes perpendicular to the axes of said retainer.

## REMARKS

All of the previously submitted claims having been cancelled, Claims 18 to 24 inclusive remain for active consideration in this application.

Applicant has very carefully considered the art made of record thus far in the prosecution of this application as well as the subject matter of the previously [1046] presented claims, and new Claims 18 to 24 inclusive have been carefully drafted to set forth patentable subject matter over the prior patents even when the same are con-

sidered in hypothetical congregation. Analyzing Claim 18, it is to be noted that this claim sets forth in approved Jepson form, the novel combination of retainer 18 and hold-down cap member 40 which cooperate to maintain spray head 34 and its associated plunger 26 substantially at the innermost end of its path of travel and at the same time providing a liquid tight seal *between* spray head 34 and the threaded interengagement of cap 40 with retainer 18. Particular note is directed to the limitations in Claim 18 relative to the provision of means on the retainer and cap member respectively providing a seal below spray head 34 and without the lower peripheral edge of cap member 40 engaging the upper surface of cap 14 on container 12. As indicated in the specification, the above construction is of importance because the required seal between retainer 18 and cap member 40 is effected without the lower peripheral edge of cap member 40 engaging the top of cap 14 which would not only tend to displace retainer 18 from extension 22 of barrel 24 but would also operate to reduce the sealing engagement between rib 56 and shoulder 50, thereby causing the liquid contained within container 12 to leak between interengaged surfaces of cap member 40 and retainer 18.

Comparing the combination set forth in Claim 18 with the patents of record, it is to be noted that [1047] Lohse does not have a pair of normally interengaged surfaces such as rib 56 and shoulder 50 of applicant's unit cooperating to provide a liquid tight seal beneath spray head 30 and above the complementally engaged threads of the assembly, but on the contrary Lohse utilizes a gasket 3 positioned over cap 1 and which is adapted to be engaged by the lower peripheral edge of cap 12 to effect the liquid seal. Not only is applicant's seal much more effective than that possible in the device of Lohse, but because of the way in which the seal is disposed completely interiorly of cap member 40, there is no likelihood of the seal components becoming damaged during assembly and transportation of the unit. It can be recognized that damage of the character referred to above could occur very readily to the closure assembly employed by Lohse, particularly in view of the fact that the sprayers are subjected to relatively rough handling during transportation and merchandising of the same.

Another important fact is that applicant's closure assembly including retainer 18 and cap member 40 is adapted

to be produced of moldable materials to lower the cost of the package as well as providing substances which are resistant to corrosion produced by the liquid in container 12 and thus if the cap 12 of Lohse were produced of polyethylene, for example, as is applicant's cap 40, it would be very difficult to obtain a liquid tight seal between the lower peripheral edge of Lohse's cap 12 and washer 3.

[1048] Applicant has solved the above problems by the construction set forth in Claim 18 and wherein the interengaged seal surfaces are disposed directly above the interengaged threaded sections of cap member 40 and retainer 18 and below spray head 34 whereby screwing of cap member 40 onto retainer 18 produces a tight seal notwithstanding the fact that cap member 40 may be molded of polyethylene or the like and retainer 18 is also of a plastic material.

Modification of Lohse in view of Nilson and Slade still would not produce an assembly as set forth in Claim 18, it being noted that Slade employs sealing liner 25 at the uppermost end of cap member 17 to seal the top of neck portion 16, but this seal is not analogous to or equivalent to applicant's seal provided by rib 56 and shoulder 50 in interengagement when cap member 40 is on retainer 18, nor is Slade's seal member 25 located in the same position as applicant's interengaged sealing parts. It is obvious that placement of a sealing liner 25 in the top of applicant's cap member 40 in overlying relationship to spray head 34 would not be of any effect in preventing leakage of liquid material from cap member 40 through the annular area between retainer 18 and the peripheral edge of cap member 40.

By the same token, Nilson shows no structure capable of providing a seal as is provided in applicant's device. The tabs 22 of Nilson's spout 19 do operate to prevent the lower peripheral margin of spout 19 from contacting the upper surface of the can, but applicant takes [1049] exception to any contention that this is a disclosure of a cap member as illustrated in the drawing of the instant case and clearly claimed in Claim 18. In this respect, it is applicant's contention that the interengaging portions of rib 56 and shoulder 50 serve the important function of providing a liquid tight seal below spray head 34 and are disposed in predetermined positions to prevent the lower peripheral edge of cap member 40 from engaging cap 14 which would thereby decrease the effectiveness of the de-

fined seal. This concept is not inherent in the construction of Nilson and applicant submits that Nilson should be removed as a reference in the further prosecution of this application.

Claim 19 contains an additional limitation directed to the conical configuration of one of the normally interengaged surfaces presenting a seal between cap member 40 and retainer 18 and it is manifest that none of the patents cited show this structure. Improved results are provided by this construction since the seal becomes tighter as cap member 40 is shifted toward cap 14 thereby precluding any liquid from leaking from cap member 40. Claim 19 should also be passed to issue.

Claim 20 is allowable for the reasons advanced with respect to Claim 19 and more specifically sets forth the actual configuration and disposition of rib 56. It is manifest that none of the patents, even when the same are considered together, show these parts and the specific arrangement thereof. Claim 20 is also allowable.

[1050] Claim 21 recites that cap member 40 and retainer 18 are formed of material having different coefficients of hardness whereby a better seal between shoulder 50 and rib 56 is effected because of deformation of one of the latter. As best shown in Fig. 1, cap member 40, for example, may be molded of material somewhat softer than from which retainer 18 is molded whereby shoulder 50 is deformed as cap member 40 is shifted toward cap 14 and thereby assuring an effective fluid tight seal. This concept is new in this art and applicant is entitled to the protection inherent in Claim 21.

Claim 22 states that cap member 40 is of sufficient length to permit shoulder 50 to move into firm interengagement with rib 56 without spray head 34 moving into contacting relationship with retainer 18 and which would thereby operate to decrease the sealing engagement of shoulder 50 with rib 56. This claim is allowable for the reasons set forth above and is entitled to be passed to issue over the previously discussed claims.

Claims 23 and 24 recite the novel screw thread arrangement provided on retainer 18 and cap member 40 and which permits cap member 40 to be screwed onto retainer 18 with only a quarter turn of cap member 40 being required, thus materially reducing the assembly time of the instant closure unit. All of the patents of record show

threaded components wherein it is necessary that the outer part be rotated at least a full turn or more relative to the inner part in order to bring the elements into relatively tight interengagement. The necessity of turning [1051] cap member 40 relative to retainer 18 more than a quarter turn is obviated by the instant construction and applicant submits that the defined structure constitutes a patentable advance in the art and that Claims 23 and 24 are allowable. Note that both of the sections 52 and 54 simultaneously engage the threads on cap member 40, thus causing the latter to be pulled down evenly over retainer 18 toward cap 14 and precluding the possibility of binding of cap member 40 before the same reaches the lowermost end of its path of travel. Claims 23 and 24 clearly are patentable over the art cited.

It is submitted that this case is now in condition for passing to issue and that applicant is entitled to a notice of allowance of Claims 18 to 24 inclusive. Such favorable action is respectfully solicited.

Respectfully submitted,

/s/ C. Earl Hovey

Attorney for Applicant

CEH:jd-4

[1052] IN THE UNITED STATES PATENT OFFICE

(Paper No. 8262 Nov. 13, 1958 Div. 35.)

November 12, 1958

| | | |
|---|---|---|
| Application of | ) | |
| BAXTER I. SCOGGIN, JR. | ) | |
| Serial No. 643,711 | ) | DIVISION 35 |
| Filed March 4, 1957 | ) | |
| PUMP-TYPE LIQUID | ) | |
| SPRAYER HAVING HOLD-DOWN | ) | |
| CAP | ) | |

---

Hon. Commissioner of Patents
Washington 25, D. C.

Sir:

In further response to Office Letter of October 1, 1958, it is respectfully requested that the following amendment be entered in the above identified application:

## CLAIMS

Cancel Claims 18 to 24 inclusive.

Add the following claims:

25. In a closure assembly for an open-top container having a perforated cap over said open top thereof mounting a spray unit including a barrel provided with a tubular extension passing coaxially upwardly through the perforation in said cap, a plunger reciprocably carried by the barrel and normally extending therebeyond and a spray head on the upper end of the plunger above said extension, the combination with said spray unit of an annular retainer telescoped over and secured to the extension above said cap and provided with external, circumferentially disposed screw threads and an annular, [1053] continuous segment at the upper part of the retainer above said screw threads, and a cup-shaped hold-down member housing the head and holding the plunger depressed at substantially the innermost path of travel thereof within the barrel, said member being provided with internal screw threads complementally engaging said screw threads on the retainer and having an internal, circumferentially extending, continuous shoulder disposed to engage said segment around the entire periphery thereof and thereby present a liquid-tight seal located between the spray head and said threads on the retainer and said member respectively, said shoulder being spaced from the lower annular peripheral edge of the member a distance at least slightly less than the distance from that portion of said segment normally engaged by said shoulder, to the proximal upper surface of the cap whereby said lower edge of the member is maintained out of contacting relationship with the cap when the member is on the retainer in a position with said shoulder in tight sealing engagement with the segment.

26. A closure assembly as set forth in Claim 25 wherein one of the normally interengaged surfaces of the shoulder and segment respectively is substantially conical to present an inclined annular face coaxial with the member and said retainer and of sufficient diameter at the largest end thereof to cause the seal effected between the shoulder and said segment to become tighter as the shoulder slides on said segment during shifting of the member toward the cap.

27. A closure assembly as set forth in Claim 26 wherein said retainer is provided with a continuous, [1054] annular

rib integral with the normally upper edge thereof and defining said segment, said rib having an outwardly facing, inclined surface presenting said conical face and of greatest external diameter at the zone of juncture of the rib with the retainer, said member having a pair of inner, coaxial, longitudinally spaced, cylindrical surfaces, the innermost cylindrical surface having a smaller diameter than the outermost cylindrical surface and presenting said shoulder therebetween lying in a plane perpendicular to the axes of said cylindrical surfaces, the diameter of said innermost cylindrical surface of the member being intermediate the diameters of opposed external end margins of said rib.

28. A closure assembly as set forth in Claim 27 wherein the member and retainer are constructed of materials having different coefficients of hardness whereby one of the interengaged faces of the rib and said shoulder respectively is deformed as the member is shifted toward the cap to thereby produce a more effective seal therebetween.

## REMARKS

Applicant wishes to acknowledge with appreciation the interview courteously granted by the Honorable Examiner and the cooperation received in the drafting of allowable claims which thereby place this application in condition for passing to issue.

During the subject interview, the Honorable Examiner cited two additional patents not previously of record in the prosecution of this application and which were believed to be pertinent as to the allowability of [1055] Claims 18 and 19, presented in applicant's response of November 1, 1958. The new references referred to are U. S. Patent 1,447,712 issued March 6, 1923 to Charles S. Cohen, assignee of John W. Darley, Jr. The other newly applied patent was No. 2,586,687, issued February 19, 1952 to Russell Mellon.

These new patents were carefully studied during the interview and agreement was reached between the Honorable Examiner and applicant's attorney relative to limitations which must be in the claims in order to define novelty over the previously applied disclosure of Lohse when considered in view of the newly cited patents of Mellon and Darley, Jr. It was pointed out that although Mellon does disclose a hold-down cap for liquid spray con-

tainers wherein a seal was effected between spray head 18 and screw threads 30, neither of the patentees disclosed a closure assembly wherein annular segment or rib 56 on retainer 18 and shoulder 50 on cap 40 were disposed in such positions as to cause the lower peripheral edge of cap 40 to be maintained out of contacting relationship with cap 14 when cap 40 was screwed tightly on retainer 18 to cause shoulder 50 to be moved into sealing engagement with rib or segment 56. Lohse's cap 12 clearly moves into contacting relationship with gasket or washer 3, inasmuch as this is the point of sealing engagement between cap 12 and the cap unit 1 on container A, while in Mellon, it also appears, as best shown in Fig. 3, that cap 28 also engages the margin of bottle 10 defined by the ring surrounding the tubular open top thereof. Thus, the obvious modification of Lohse in view of Mellon would be merely to [1056] provide the seal 32 of Mellon within Lohse's cap 12 in a position to engage the upper part of central headed thread 4, while the lower peripheral margin of the cap remained in tight contacting engagement with either the cap on the container or a circumferentially extending projection on the container itself.

As previously indicated, applicant's construction is advantageous wherein the lower peripheral edge of the hold-down member is maintained out of contacting relationship with the cap on the container to not only assure a tight seal between shoulder 50 and rib or segment 56, but also to prevent the cap from tending to dislodge retainer 18 from extension 22 of barrel 24 during assembly of the unit or upon replacement of cap 40.

Applicant's construction is clearly set forth in new Claim 25 wherein it is specifically stated that the distance between shoulder 50 and the lower peripheral margin of cap 40 is at least slightly less than the distance between that portion of rib 56 engaged by shoulder 50 and the upper proximal surface of cap 14, whereby the lower margin of cap 40 is maintained out of contacting relationship with cap 14 when shoulder 50 is in tight sealing engagement with segment or rib 56.

Claim 26, dependent upon Claim 25, is allowable for the same reasons advanced above and further, because of the recitation therein of the provision of a sealing segment on retainer 18 having a conical surface adapted to be engaged by shoulder 50 of cap 40. Although the cylin-

der 11 of Darley, Jr. has a conical surface at the upper peripheral edge thereof, the cap 26 of this patent [1057] is not a hold-down member as defined in the subject claim nor is a sealing engagement provided such as effected between applicant's shoulder 50 and segment or rib 56.

The Honorable Examiner indicated that Claims 20 and 21, now rewritten as Claims 27 and 28, were allowable and therefore, these claims will not be discussed further.

The claims previously submitted relating to the screws on retainer 18 being of particular configuration as well as those on hold-down member 40, having been canceled, the issue of patentability of the subject claims is no longer at issue in this application. However, applicant wishes to make of record the fact that cancellation of these claims is not intended to constitute a dedication of the subject matter to the public, but that such cancellation has been effected to expedite the prosecution of this application only.

This application is now in condition for passing to issue and it is therefore respectfully requested that the Notice of Allowance of Claims 25 to 28 inclusive be forwarded at an early date. Since the application is in condition for immediately passing to issue, it is requested that the same be made special as provided in the Manual of Patent Examining Procedure, for the subject purpose.

Respectfully submitted,
/s/ C. Earl Hovey
Attorney for Applicant

CEH/ef-4

[1058] REFERENCES CITED

Following references are of record in the patented file of this patent:

UNITED STATES PATENTS

| Name | Number | Date |
|---|---|---|
| Cohen | 1,447,712 | Mar. 6, 1923 |
| Nilson | 2,118,222 | May 24, 1938 |
| Lohse | 2,119,884 | June 7, 1938 |
| Mellon | 2,586,687 | Feb. 19, 1952 |
| Slade | 2,844,290 | July 22, 1958 |

FOREIGN PATENTS

| Country | Number | Date |
|---|---|---|

OTHER REFERENCES

374

[1059]

All communications respecting this application should give the serial number, date of filing, and name of the applicant.

U. S. DEPARTMENT OF COMMERCE
Patent Office
Washington

NOTICE OF ALLOWANCE

The application for patent identified below has been examined and found allowable for issuance of Letters Patent.

Filing Date 03/04/57

Serial No. 643711

No. Claims Allowed 4

Examiner L. J. Dembo

Applicant Scoggin, Baxter I., Jr., Kansas City, Mo.

Assignee Cook Chemical Company, mesne

Title of Invention Pump-type liquid sprayer having hold-down cap

MAILED Nov. 20, 1958

With the allowance of the application the final fee becomes due. This fee is thirty dollars ($30) plus one dollar ($1) for each claim allowed in excess of twenty (20) and must be paid within 6 months from the date of this notice. Failure to remit the final fee will result in the patent being withheld from issue.

As a convenience in remitting this fee, use of the enclosed Form POL-85a is suggested. The final fee will not be received from anyone other than the applicant, his assignee or attorney, or a party in interest as shown by the records of the Patent Office.

If it is desired to have the patent issued to an assignee or assignees, an assignment, together with the fee for recording the same, must be filed in this Office on or before the date of payment of the final fee.

The patent will be issued and forwarded within approximately two months after receipt of the final fee.

By direction of the Commissioner.

C. Earl Hovey
Federal Reserve Bank Bldg.
Kansas City 6, Mo.

375

U. S. Department of Commerce
Patent Office

3040-15-B

FINAL FEE TRANSMITTAL

...ce in transmitting final fees to the Patent Office. When properly completed it may be used ...ter. Respondents will note and fill in items numbered 1 thru 6 below. The Final Fee Receipt, ...e address appearing in box at lower left of this form. If desired, use the reverse side of your Notice when completing this form.

PATENTS is requested to apply the accompanying fee to the case identified below, and deliver the patent

NOV 26 1958

24, 1958
Date

Attorney, Agent or Applicant

... will not be received from other than the applicant, his assignee, or attorney, or a party in interest as shown by the records of ... Office. Final fees will not be applied to pending applications.

| | FILING DATE | SERIAL NO. | NO. CLAIMS ALLOWED | EXAMINER |
|---|---|---|---|---|
| | 03/04/57 | 643711 | 4 | L. J. Dombo |
| APPLICANT | Scoggin, Baxter I., Jr., Kansas City, Mo. | | | MAILED Nov. 20, 1958 |
| ASSIGNEE | Cook Chemical Company, mouse | | | |
| TITLE OF INVENTION | Pump-type liquid sprayer having hold-down cap | | | Notice of Allowance Date |

2. DEFERMENT: (Indicate below if desired)

NOV-26 ... 0510 ... 1010

3. FEE ENCLOSED

$ $30,00

4. Assignee: (If assigned and name does not appear in the corresponding space above)

S/N 643,711

MAILING INSTRUCTIONS

...ote—The office will send the patent to the address entered in stub at left below unless you direct otherwise. Use the spaces provided to indicate any changes which affect the delivery of the patent.

Do not send the patent to the addressee listed below. Send patent to (check one)

☐ Patentee

☐ Associate Attorney (See specific authorization in file)

☐ Assignee

☐ Change of address—Attorney

The address of the person checked above is typed in Item 6 below.

6

37

PAT D ☐

376

In Re Patents

# United States District Court

for the

WESTERN DISTRICT OF MISSOURI

MISSIONER OF PATENTS,
Washington 25, D. C.

WESTERN DIVISION (Kansas City)

SIR:

In compliance with the Act of July 19, 1952 (66 Stat. 814; 35 USC 290), you are advised that there was filed on the 27th day of April, 1959, in this court an action, No. 12349, entitled:

Name Calmar, Incorporated, Plaintiff,

Address Los Angeles, California

*versus*

Name Cook Chemical Company, Defendant,

Address Kansas City, Missouri

brought upon the following patents:

| | PATENT NO. | DATE OF PATENT | PATENTEE |
|---|---|---|---|
| 1 | 2,870,943 | Jan. 27, 1959 | Baxter I. Scoggin |
| 2 | | | |
| 3 | | | |
| 4 | | | |
| 5 | | | |

In the above-entitled case, on the day of , 19 , the following patents have been included by (insert amendment, answer, cross bill, or other pleading):

| | PATENT NO. | DATE OF PATENT | PATENTEE |
|---|---|---|---|
| 1 | | | |
| 2 | | | |
| 3 | | | |
| 4 | | | |
| 5 | | | |

In the above-entitled case the following decision has been rendered or judgment issued:

Clerk.

Date , 19

By Virgil B. Cook, Deputy Clerk.

377

# INDEX OF CLAIMS

| Claim Final | Claim Original | Date | Claim Final | Claim Original | Date |
|---|---|---|---|---|---|
| | 1 | | | 61 | |
| | 2 | | | 62 | |
| | 3 | | | 63 | |
| | 4 | | | 64 | |
| | 5 | | | 65 | |
| | 6 | | | 66 | |
| | 7 | | | 67 | |
| | 8 | | | 68 | |
| | 9 | | | 69 | |
| | 10 | | | 70 | |
| | 11 | | | 71 | |
| | 12 | | | 72 | |
| | 13 | | | 73 | |
| | 14 | | | 74 | |
| | 15 | | | 75 | |
| | 16 | | | 76 | |
| | 17 | | | 77 | |
| | 18 | | | 78 | |
| | 19 | | | 79 | |
| | 20 | | | 80 | |
| | 21 | | | 81 | |
| | 22 | | | 82 | |
| | 23 | | | 83 | |
| | 24 | | | 84 | |
| | 25 | | | 85 | |
| | 26 | | | 86 | |
| | 27 | | | 87 | |
| | 28 | | | 88 | |
| | 29 | | | 89 | |
| | 30 | | | 90 | |
| | 31 | | | 91 | |
| | 32 | | | 92 | |
| | 33 | | | 93 | |
| | 34 | | | 94 | |
| | 35 | | | 95 | |
| | 36 | | | 96 | |
| | 37 | | | 97 | |
| | 38 | | | 98 | |
| | 39 | | | 99 | |
| | 40 | | | 100 | |
| | 41 | | | 101 | |
| | 42 | | | 102 | |
| | 43 | | | 103 | |
| | 44 | | | 104 | |
| | 45 | | | 105 | |
| | 46 | | | 106 | |
| | 47 | | | 107 | |
| | 48 | | | 108 | |
| | 49 | | | 109 | |
| | 50 | | | 110 | |
| | 51 | | | 111 | |
| | 52 | | | 112 | |
| | 53 | | | 113 | |
| | 54 | | | 114 | |
| | 55 | | | 115 | |
| | 56 | | | 116 | |
| | 57 | | | 117 | |
| | 58 | | | 118 | |
| | 59 | | | 119 | |
| | 60 | | | 120 | |

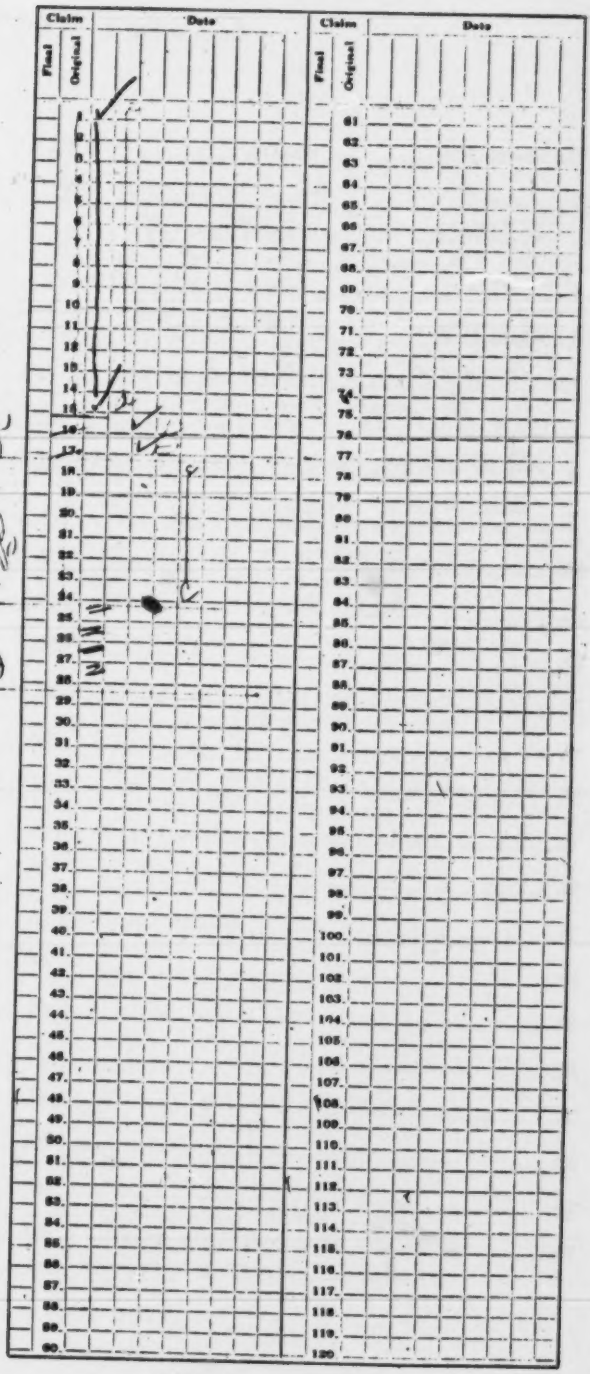

## SEARCHED

| Class | Sub | Date | Ex'r |
|---|---|---|---|
| 222 | 182 | | |
| | 394 | | |
| 137 | 382 | | |
| | 382.5 | 11/5/57 | [illegible] |
| 222 | 538 | | |
| | 542 | 8/5/58 | [illegible] |
| 222 | 320 | | |
| | 321 | | |

2586,687
1,447,712

222/321
222/320

| SYMBOLS | STATUS |
|---|---|
| √ | Rejected |
| = | Allowed |
| – (Through numeral) | Canceled |
| + | Restriction requirement |
| N | Nonelected invention or species |
| I | Interference |
| A | Appeal |

38

19—11373-6

378

# CONTENTS


1. Application ____ papers.
2. Print Nov. 19, 1957
3. REJECTION NOV 5 - 1957
4. Amdt. A May 1, 1958
5. REJECTION OCT 1 1958
6. Amdt B Nov. 3, 1958
7. Sup. Amdt C Nov. 19, 1958
8. LIST OF REFERENCES
9. Notice of Suit June 27, 1959
10. ____
11. ____
12. ____
13. ____
14. ____
15. ____
16. ____
17. ____
18. ____
19. ____
20. ____
21. ____
22. ____
23. ____
24. ____
25. ____
26. ____
27. ____
28. ____
29. ____
30. ____
31. ____
32. ____
33. ____
34. ____
35. ____
36. ____
37. ____
38. ____
39. ____
40. ____
41. ____
42. ____
43. ____
44. ____
45. ____
46. ____
47. ____
48. ____
49. ____
50. ____

[1064] PLAINTIFF'S EXHIBIT F.

February 6, 1962

Claim 1 of Scoggin 2,870,943

In a closure assembly for open-top container having a perforated cap over said open top thereof, mounting a spray unit including a barrel provided with a tubular extension passing coaxially upwardly through the perforation in said cap, a plunger reciprocably carried by the barrel and normally extending therebeyond and a spray head on the upper end of the plunger above said extension, the combination with said spray unit of an annular retainer telescoped over and secured to the extension above said cap and provided with external, circumferentially disposed screw threads and an annular, continuous segment at the upper part of the retainer above said screw threads, and a cup-shaped hold-down member housing the head and holding the plunger depressed at substantially the innermost path of travel thereof within the barrel, said member being provided with internal screw threads complementally engaging said screw threads on the retainer and having an internal, circumferentially extending, continuous shoul-

Cancelled Claim 18 of Scoggin Application

In a closure assembly for an open-top container having a perforated cap over said open top thereof, mounting a spray unit including a barrel, an extension passing coaxially through the perforation in said cap, a plunger reciprocably carried by the barrel and normally extending therebeyond and a spray head on the upper end of the plunger above said extension, the combination with said spray unit of an annular retainer secured to and surrounding the extension above said cap and provided with external, circumferentially disposed screw threads and an annular, continuous segment at the upper peripheral edge of the retainer above said screw threads, and a cup-shaped cap member housing the head and holding the plunger depressed at substantially the innermost path of travel thereof within the barrel, said member being provided with internal screw threads complementally engaging said screw threads on the retainer and having an internal, circumferentially extending, continuous shoulder disposed to

| Claim 1 of Scoggin 2,870,943 | Cancelled Claim 18 of Scoggin Application |
| --- | --- |
| der disposed to engage said segment around the entire periphery thereof and thereby present a liquid-tight seal located between the spray head and said threads on the retainer and said member respectively, | engage said segment around the entire periphery thereof and thereby present a liquid-tight seal located between the spray head and said threads on the retainer and said member respectively, |
| said shoulder being spaced from the lower annular peripheral edge of the member a distance at least slightly less than the distance from that portion of said segment normally engaged by said shoulder, to the proximal upper surface of the cap whereby said lower edge of the member is maintained out of contacting relationship with the cap when the member is on the retainer in a position with said shoulder in tight sealing engagement with the segment. | said segment and the shoulder being disposed to maintain the lower peripheral margin of the member out of engagement with the cap when the segment and shoulder are in sealing inter-engagement. |

PLAINTIFF'S EXHIBIT G 381

G

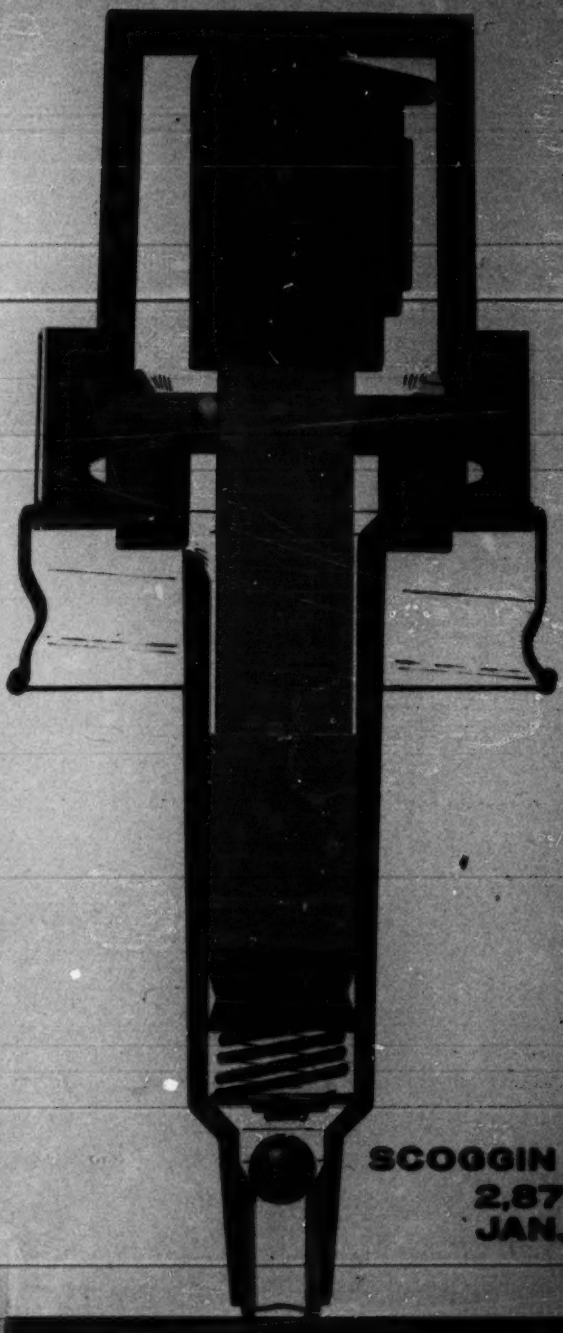

SCOGGIN PAT. NO.
2,870,943
JAN. 27, 1959

P-G

PLAINTIFF'S EXHIBIT G-1

383

G

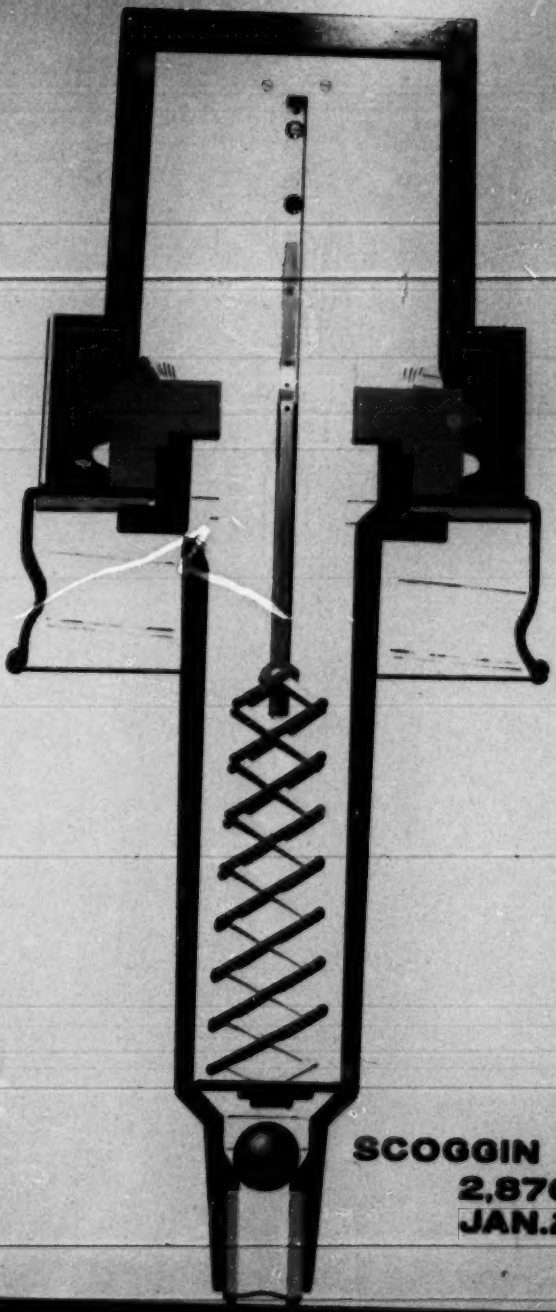

SCOGGIN PAT. NO.
2,870,943
JAN. 27, 1959

P-G1

PLAINTIFF'S EXHIBIT H

385

Aug. 16, 1955 J. G. LIVINGSTONE 2,715,480

CONTAINER ADAPTER PROVIDED WITH POURING SPOUT, DRIP RETURN AND CAP

Filed March 9, 1953

2 Sheets-Sheet 1

FIG. 1

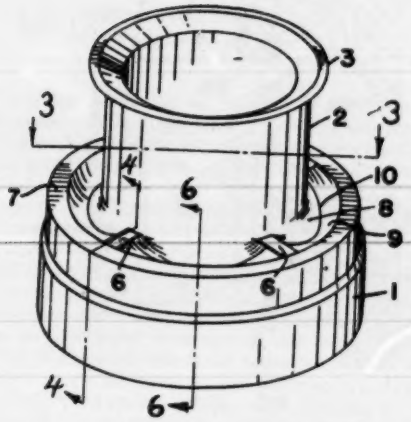


FIG. 2

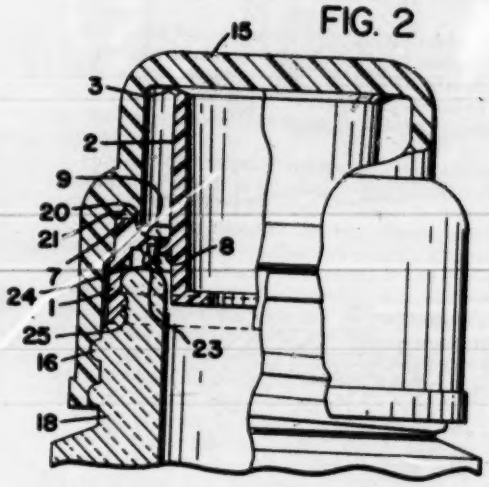


FIG. 3

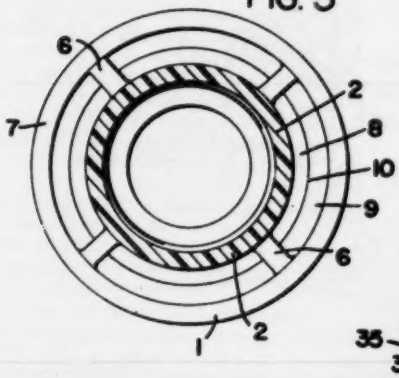


FIG. 8

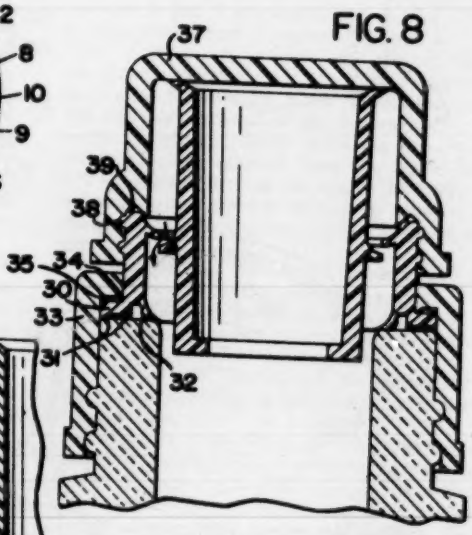


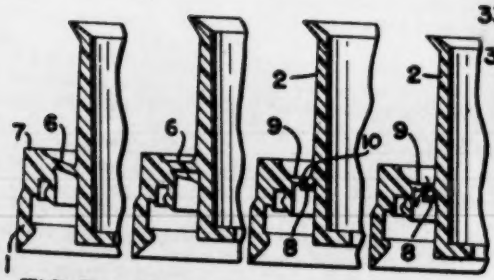


FIG. 5 FIG. 4 FIG. 6 FIG. 7

INVENTOR.

BY JAY G. LIVINGSTONE

by Gordon P. Mead

ATTY.

386

Aug. 16, 1955 J. G. LIVINGSTONE 2,715,480

CONTAINER ADAPTER PROVIDED WITH POURING SPOUT, DRIP RETURN AND CAP

Filed March 9, 1953 2 Sheets-Sheet 2

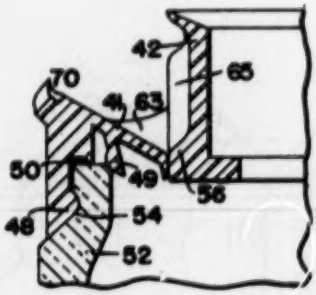


FIG. 12

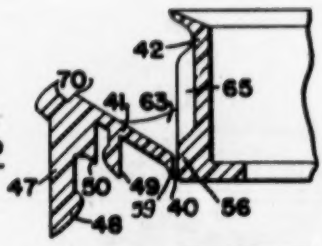


FIG. 10

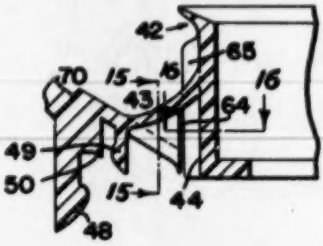


FIG. 11

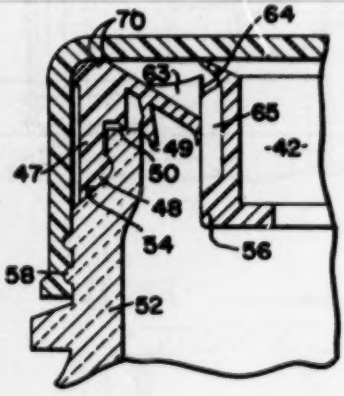


FIG. 13

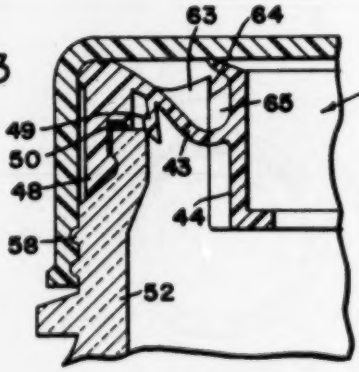


FIG. 14

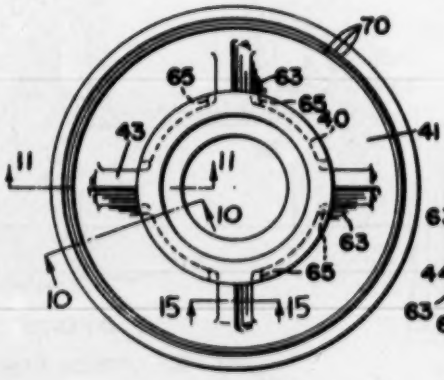


FIG. 9

FIG. 15

FIG. 16

INVENTOR.
JAY G. LIVINGSTONE
BY Gordon C. Mack
ATTY.

337

# United States Patent Office

2,715,480
Patented Aug. 16, 1955

REISSUED
May 29, 1956
RE. 24,159



2,715,480

## CONTAINER ADAPTER PROVIDED WITH POURING SPOUT, DRIP RETURN, AND CAP

Jay G. Livingstone, Akron, Ohio

Application March 9, 1953, Serial No. 341,288

6 Claims. (Cl. 222—111)

This invention relates to an adapter for a bottle or other container. It is made of a plastic. The adapter is provided with means for attaching it to the container and with a spout having a pouring lip. There is a channel below the lip which runs down the outer surface of the lip and spout. The bottom of the channel is slit in one or more places so that when downward pressure is applied to the spout it is depressed and the slits open up and provide openings through which liquid which has collected in the channel drains back into the container. The slits may be at the inner edge of the channel adjacent the spout, or at its outer edge near means for attaching the adapter to the container, or at some location in between. The return of liquid to the bottle is preferably accomplished by fastening a cap over the adapter in such a way that it depresses the spout so that the slits open.

The invention will be further described in connection with the accompanying drawings, in which—

Fig. 1 is a view in perspective of the adapter;

Fig. 2 shows the adapter on a bottle with a cap fastened to the bottle over the adapter which presses the spout down into the bottle sufficiently to open the slits located in the channel which surrounds the spout;

Fig. 3 is a plan view of the adapter on the line 3—3 of Fig. 1;

Fig. 4 is a section through a bridge portion of the adapter between slits on the line 4—4 of Fig. 1;

Fig. 5 is a similar section but with the spout depressed;

Fig. 6 is a section through a slit portion of the adapter on the line 6—6 of Fig. 1;

Fig. 7 is a similar section but with the slits open;

Fig. 8 is a view of a slightly modified form of adapter fastened to a bottle with a cap with an open top and covered by a second cap which is fastened to the adapter and depresses the spout thereof so as to open the slits therein;

Fig. 9 is a plan view of a modified type of adapter in which the slits are adjacent the outer wall of the spout, the bridges are longer and slope upwardly to the spout, and the spout is thin where the bridges are attached to make its walls more flexible;

Fig. 10 is a section on the line 10—10 of Fig. 9;

Fig. 11 is a section on the line 11—11 of Fig. 9;

Fig. 12 is a section similar to the section of Fig. 10, but with the adapter on a bottle;

Fig. 13 is a section similar to those shown in Figs. 10 and 12, but with a cap on the bottle and the spout of the adapter depressed, opening the slits;

Fig. 14 is a section similar to that shown in Fig. 13 but on the same line as the section of Fig. 11;

Fig. 15 is a section, partly broken away, on the line 15—15 of Figs. 9 and 11; and

Fig. 16 is a section on the line 16—16 of Fig. 11.

The adapter shown in the drawings is provided with a skirt portion 1 which fits over the top of a bottle or other container. It is to be understood that instead of being provided with a skirt portion the base of the adapter



may be in the form of a stopper which fits into the neck of a bottle or the like, or the base may be threaded internally or externally to screw on to the neck of a bottle, or the base of the adapter may be of any other design.

Located centrally of the adapter is the spout 2 with the pouring lip 3 at the top thereof. This lip extends around the top of the spout so that liquid can be poured from it when the bottle or container is tilted in any direction.

The spout 2 is supported from the skirt 1 by the bridges 6. As clearly shown in Fig. 5, these bridges 6 are located below the outer wall 7 above the skirt 1. This wall forms a tight seal with the cap by means of a groove in the undersurface thereof, as will be explained in what follows.

Between the bridges 6 are the slit depressed areas, one portion 8 of which is attached to the spout, and another portion 9 of which is attached to the skirt. Between these portions are the slits 10. As best shown in Fig. 6, the portion 8 is preferably offset downwardly somewhat from the portion 9, although the portions 8 and 9 contact one another so that when the container is tipped for pouring no liquid escapes between the two. These portions, or at least the lower of them, are preferably curved downwardly so that the pressure of liquid against their undersurface when the container is tilted forms a seal between them so that no liquid escapes.

When pressure is applied to the top of the spout, as when a cap is fastened down over it and the spout is pressed downwardly with respect to the skirt (as illustrated in Figs. 2, 5, 7 and 8), the portions 8 of the channel are offset downwardly from the portions 9, opening the slits 10, and any liquid which is collected in the channel drains down through the slits into the bottle. The portions 8 and 9 are maintained in this offset position as long as pressure is applied to the top of the spout. Thus, if the bottle is upset with the cap fastened over the spout, liquid may run out through the slits between these offset portions but it will be retained under the cap and will not spill out of the cap enclosure. When the bottle is righted prior to removing the cap any liquid which has thus escaped from the bottle into the cap will be returned through the slits to the bottle. When the pressure on the spout is released by removal of the cap, the portions 8 return into sealing engagement with the portions 9.

Figure 2 shows the cap 15 screwed onto the threads 16 on the outside of the neck 18 of a bottle. The threads cover a sufficient vertical area on the outer surface of the bottle so that when the cap is screwed down on these threads the top of the cap depresses the spout sufficiently to open the slits 10 between the portions 8 and 9 of the channel. Figure 2 shows the spout depressed and the slits open.

The cap is of the type in which there is an annular tongue 20 which projects downwardly from its inner surface. The outer wall of this tongue is beveled inwardly and downwardly and meets the downwardly and outwardly slanting wall of the cap to form the V-shaped groove 21 which fits over the top of the wall 7 of the adapter. The adapter is made of flexible plastic and the top of the wall 7 is squeezed by this V-shaped groove 21 so that there is a liquid-tight seal formed all around the top of the adapter. This prevents leakage from the cap enclosure when the capped bottle is upset.

On the undersurface of the portion 9 of the channel around the spout is the flexible tongue 23 which is pressed against the top edge of the neck of the bottle and makes a liquid-tight seal with it. There is also the annular pointed tongue 24 of somewhat larger diameter which makes a further seal with this top edge of the bottle. The adapter shown is of the slip-on type in which

the bead 25 fits into a complementary indentation around the top of the bottle. Between the tongues 23 and 24 is a tightly sealed air pocket in which air is trapped at a pressure greater than atmospheric, and this prevents liquid escaping from the bottle when the bottle is tilted.

The bottle fitted with this adapter and cap is liquid tight. It can be tipped over and although the liquid may then run into the cap through the slits 10, as soon as the bottle is returned to the upright position all of this liquid drains back into the bottle.

As soon as the cap is removed from the bottle the depressed spout assumes its original position. This closes the slits 10 and prevents any liquid from escaping through the slits when the bottle is tipped for pouring. After pouring any liquid dripping from the lip 3 or running down the outside of the spout collects in the channel. It can be drained into the bottle by manually depressing the spout to open the slits 10. Whenever the cap is replaced any liquid in the channel is automatically returned to the bottle.

Figure 8 illustrates a modified type of adapter. The bridges, channel and slits are identical with those previously described. The adapter is of flexible plastic. The flange 30 which extends outwardly from its base is designed with two annular contact points 31 on its undersurface. These and the tongue 32 form an air pocket similar to that formed by the tongues 23 and 24 of Fig. 2 and form a tight seal.

When the hard cap 33 is screwed on to the bottle it presses down on the flange 30 and holds the adapter tightly to the top of the bottle. The annular tongue 34 on the cap 33 presses down on the top of the flange between the contact points 31 and seals these tightly against the top of the bottle. This is aided by the upwardly projecting outer edge 35 of the flange 30 which presses against the undersurface of the cap 33 and forces the tongue 31 on the outer edge of the flange 30 against the top edge of the bottle.

The cap 37 may be of hard plastic or flexible plastic. It is threaded onto the external threads 38 of the adapter. The V-shaped groove 39 in the undersurface of the cap operates in the same manner as the groove 21 of the cap 15 of Fig. 2, making a tight seal with the top of the wall of the adapter.

In the adapter shown in Figs. 9–16 the slits 40 are at the inner edge of the channel 41 adjacent the spout 42. The bridges 43 are long and extend upwardly. The spout is thin above the bridges, and it is grooved at 44 below the bridges, making it thin and flexible where the bridges are attached to it. The bridges are preferably of uniform thickness, as shown in Fig. 15, so that they flex readily. The undersurface of the skirt 47 of the adapter is provided with a bead 48 at its bottom edge, a flexible annular tongue 49 and an annular pointed bead or tongue 50. Figure 12 shows how these cooperate with the bottle 52 in order to form a tight seal. The bead 48 fits snugly into the groove 54 in the bottle. The tongue 49 presses against the inner edge of the top of the neck of the bottle and this throws the inner edges of the channel 41 up to make tight contact with the portions 56 of the base of the spout which bulge out between the bridges. The bead or tongue 50 presses against the top surface of the bottle. The tongue 49 is flexible and makes a tight seal with the inner edge of the top of the bottle even though the thickness of the neck of the bottle varies. The beads 50 and 48 are so spaced as to make a tight fit between the top and the outer surface of the neck of the bottle.

Figure 10 shows that when the adapter is not on a bottle there is a slight opening at the slit 40. When the adapter is placed on a bottle, as in Fig. 12, the tongue 49 is pressed inwardly and this closes the slit 40 by pressing the inner edges of the channels 41 against the outer surfaces of the portions 56 of the spout 42.

Figures 13 and 14 illustrate how the spout is depressed and the slits 40 are opened up when the cap 57 is screwed onto the threads 58 of the bottle 52. The cap is shallow and applies pressure uniformly around the lip of the spout. The inner edge of each channel is provided with a tongue 59. The tip of each tongue is curved outwardly to guide the inner edge of the channel over the protruding base portion 56 of the spout between the bridges when the spout rises as the cap is removed. Thus, when the cap is removed the adapter returns to the position illustrated in Fig. 12.

The bridges must be higher than the channel in order to permit liquid which drops on their upper surface to drain over their sides, down into the channel. By providing long, sloping bridges it is possible to depress the spout to a greater extent than is possible with the design of adapter shown in Figs. 1–7. The long bridges 43 of the adapter of Figs. 9–14 permit the spout to be depressed sufficiently to permit drainage of liquid from the channel into the bottle before the threads on the cap make contact with the threads 58 on the bottle.

There is a wall 63 at each edge of each channel portion 41, adjacent the bridges. Figs. 10 and 11 illustrate the adapter, as molded, and there is a slight space between the edge 64 of each wall 63 and the ribs 65 on the spout on each side of each bridge. When the adapter is put on a bottle, as in Fig. 12, the channel is lifted sufficiently to close this space. When the bottle contains liquid and is tilted for pouring, these walls prevent the liquid from running out from between the bridges and the channels. When the spout is depressed, the edges 64 slide up on the ribs 65, as illustrated in Figs. 13 and 14, and the spaces between the inner edges of the channels and the bulged portions 56 at the base of the spout open and permit any liquid on the channels to drain into the container.

The edges of the bridges come to a point, as best illustrated in Fig. 15. They make line-contact with the outer surfaces of the walls 63 and form a liquid-tight seal which prevents the escape of liquid from within the bottle, when the bottle is tilted for pouring. When the spout is raised, the top of each wall 63 contacts the edge of the adjacent bridge, as shown in Fig. 15. The bridges slope to each side so that any liquid on them, whether because of dripping from the lip or for any other reason, drains over the top of the adjacent wall 63 when the spout is raised, and down into the channel. Then, when the spout is depressed, this liquid runs over the inner edge of the channel, into the container.

The top of the outer edge of the adapter is provided with the beads 70 which press against the inner surface of the cap when the cap is screwed down tight, and prevent any leakage of liquid from the bottle to the outer surface of the adapter beyond the channel. When the cap is screwed down tight the slits 40 are open and if the bottle is then upset liquid drains through these slits against the inner surface of the top of the cap. The beads 70 prevent its going beyond this. The several beads 70 at different locations insure sealing contact between the adapter and caps of different design.

It is often desirable to assemble the adapters in the caps at a bottling works, or before shipment to the bottling works, so that after the bottles are filled the only operation required to close them is to screw the caps on to them. The tight fit of the beads 70 in the caps serves to hold the adapters in the caps before applying them to the bottles. This sub-assembly can be made at any convenient time and place. After the bottles are filled, it is only necessary to screw the caps in place. In doing this the beads 48 on the adapters automatically slip into place in the grooves 54, and no additional operation is necessary to fit the adapters on the bottles.

The drawings illustrate how the invention is applicable to adapters of different designs with different types of caps. The construction of the channel and slits may be varied to suit requirements. The adapter shown is de-

signed to be molded of polyethylene or the like, the shrinkage of which during molding is dependent on the thickness of different parts of the molded product. Thus, by making the top of the outer wall of the adapter shown in Figs. 9–16 of greater material thickness than the portions of the adapter within this wall, these portions within the wall are brought together as the portion of greater material thickness shrinks and the inner edge of each tongue 59 is drawn inwardly into contact with the base of the spout. This narrows or eliminates the space 40 (Fig. 10) between each tongue and the spout occupied by the mold during the molding. It also draws the outer surface of each wall 63 closer to the edge of the bridge adjacent to it. Thus by providing a bulk of the plastic around the edge of the adapter, edges which are separated by the thickness of the mold during molding are brought closer to one another.

It is possible to form the spout and the surrounding portion of the adapter as separate units of thermosetting material, with the slit located between them. The adjoining edges of the two units may be formed by interlocking fingers. The two units may be united by a spring of metal or the like which will force the spout upwardly when there is no downward pressure on it, and bring the interlocking fingers into sealing contact between the units.

The invention is defined in the claims which follow.

What I claim is:

1. An adapter of flexible plastic for a container, the adapter being provided with a spout for pouring liquid therethrough, a wall around the spout, a channel between said wall and the spout for the collection of liquid dripping from the spout and liquid running down the outer wall of the spout, and a slit in the channel dividing at least a part of the channel into one part that adheres to the spout and another part that adheres to the wall, whereby when the spout is depressed with respect to said wall the slit is opened and liquid in the channel drains therethrough.

2. The adapter of claim 1 in which the highest point of the spout is higher than the wall.

3. The adapter of claim 1 in which the pouring lip extends around the top of the spout and the channel is provided with a plurality of slits arranged substantially uniformly around the spout.

4. The adapter of claim 1 in combination with a cap which covers the spout and the lower portion of which is releasably sealed to the outer surface of said wall with its undersurface contacting the top of the spout and depressing the same with respect to the wall, whereby the slit is opened.

5. The adapter of claim 1 in combination with (1) a container and affixed to an opening therein and (2) a cap which covers the spout with the lower portion thereof releasably sealed to the outer surface of the container and with its undersurface contacting the top of the spout and depressing the same with respect to the wall whereby the slit is opened.

6. An adapter of flexible plastic for a container, which adapter includes a cylindrical spout with a pouring lip extending completely around the top thereof, means at the bottom of the adapter for attaching the adapter to a container, flexible bridges between the spout and the attaching means and a channel extending between each two bridges and extending from the spout to the attaching means, and a slit in each channel extending substantially from one bridge to the next and which is opened when the spout is depressed with respect to the attaching means.

**References Cited** in the file of this patent

UNITED STATES PATENTS

| | | |
|---|---|---|
| 174,840 | Newton | Mar. 14, 1876 |
| 1,306,263 | Lang et al. | June 10, 1919 |

PLAINTIFF'S EXHIBIT I

390

Sept. 18, 1956 J. G. LIVINGSTONE 2,763,402

ADAPTER

Filed June 10, 1952 2 Sheets-Sheet 1

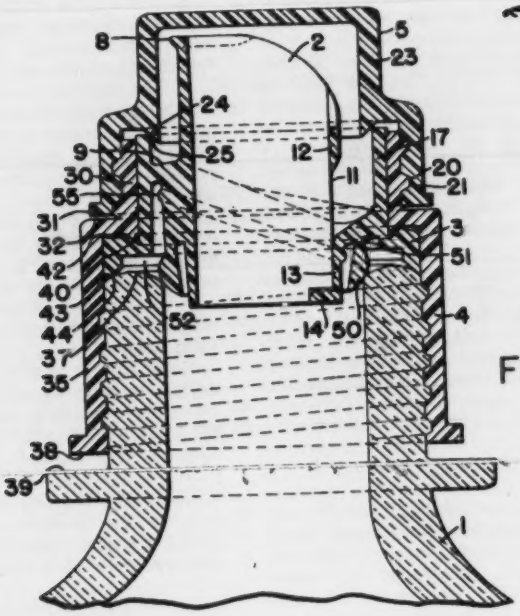


FIG. 1

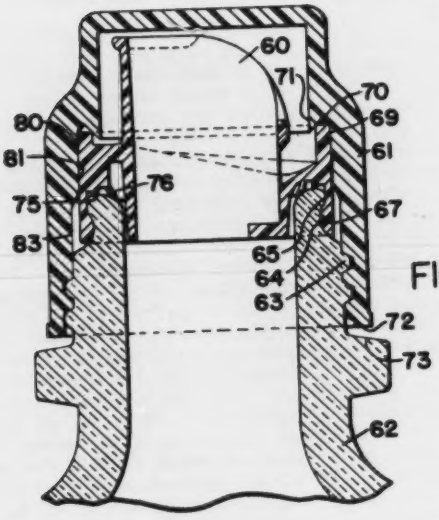


FIG. 2

FIG. 5

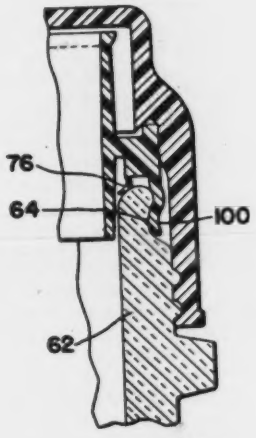


INVENTOR.
JAY G. LIVINGSTONE
BY John P. Leach
ATTORNEY

391

Sept. 18, 1956 J. G. LIVINGSTONE 2,763,402

ADAPTER

Filed June 10, 1952

2 Sheets-Sheet 2

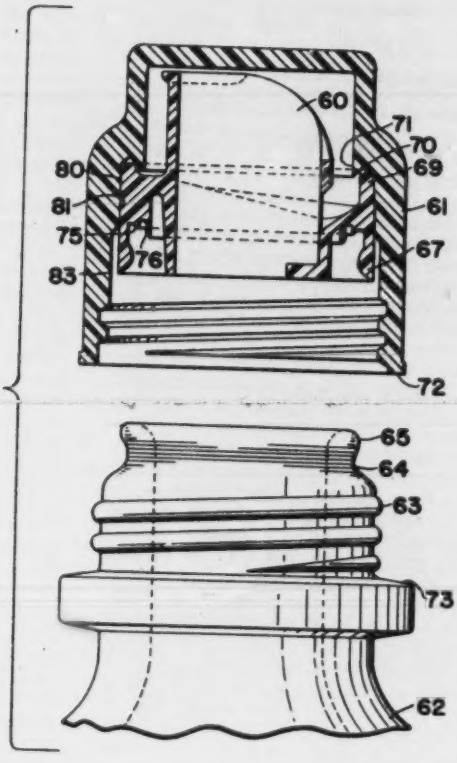


FIG. 3

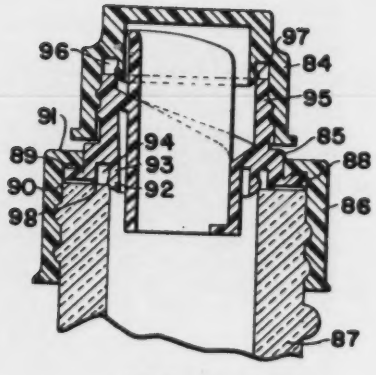


FIG. 4

INVENTOR.
JAY G. LIVINGSTONE
BY Gordon C. Ward
ATTORNEY

392

# United States Patent Office

2,763,402
Patented Sept. 18, 1956



2,763,402

## ADAPTER

Jay Gould Livingstone, Akron, Ohio

Application June 10, 1952, Serial No. 292,646

19 Claims. (Cl. 222—109)

This invention relates to a spout adapter or the like to be used on a bottle or other container with a tubular opening. The invention includes means for holding the adapter on the bottle and several such means are disclosed. Although the specification and claims refer more particularly to the use of the adapters on bottles, they may be used equally well on metal containers, for example those with threaded openings closed by threaded caps, etc. The invention includes a method of assembling a bottle, cap and adapter. The preferred form of adapter which is illustrated includes a run-back channel for returning to the bottle or other container any liquid which drips or runs down from the spout after pouring.

The adapter is formed of flexible resilient plastic. It may be made of polyethylene, etc. Stiffer plastics such as polystyrene, etc. may be used, and with such stiffer plastics a gasket may be used adjacent the bottle whereas with polyethylene no gasket is necessary. Polyethylene is preferred. The bottle or other container is rigid and may be made of glass, porcelain, metal, plastic, etc. A preferred form of adapter is designed to produce an annular air pocket around the top edge of the bottle between inner and outer sealing means on the adapter which contact the bottle in radially spaced annular areas. Means for forming such an air pocket is disclosed in the drawings and will be discussed in what follows.

The adapter may be held on the bottle by a relatively rigid cap. This cap may be made of glass, porcelain, plastic, metal, etc. This cap is preferably provided with internal threads which are screwed onto external threads at the mouth of the bottle. Several such caps are shown in the drawings and will be described in what follows. The cap may be open at the top, with the top of the adapter protruding through it. Such caps are often referred to herein as open caps. Other caps which enclose the top of the adapter are often referred to herein as closure caps.

A preferred adapter is provided with a tongue which rests on the top of the bottle and is squeezed by the cap which holds the adapter on the bottle. Different forms of such a cap are shown in the drawings and will be discussed in what follows. An open cap may be provided with external threads which fits over the adapter and holds it to the bottle and onto which is screwed a closure cap which encloses the top of the adapter.

In one preferred form of the invention a relatively rigid closure cap is provided which encloses the top of the adapter and screws onto external threads on the bottle. The adapter and cap are so designed that when the adapter is inserted in the cap it is retained in the cap even when the cap is positioned to be screwed down onto a bottle. In assembling the adapter and cap on a filled bottle, the adapter is first put in the cap, and then the cap is screwed onto the bottle. Thus the three are conveniently assembled in a single operation. The adapter employed in this way is preferably provided with snap-on means so that it will fasten itself onto the bottle as the cap is screwed onto the bottle. Thereafter,



when the cap is unscrewed the adapter remains fastened to the bottle and is not removed with the cap. This type of adapter is illustrated in the drawings and will be more particularly described in what follows.

In the drawings—

Fig. 1 is a section through a bottle or the like provided with an externally threaded neck, and shows an adapter held thereon by a relatively rigid open cap with external threads onto which a closure cap is threaded;

Fig. 2 is a cross section through a bottle showing a snap-on adapter inside a relatively rigid cap which is threaded onto a bottle or the like;

Fig. 3 is an exploded view of the assembly shown in Fig. 2, illustrating the adapter held in the cap as the cap is about to be screwed onto the bottle or the like;

Fig. 4 is a section through a bottle having an adapter held thereon by a relatively rigid open cap, and shows a closure cap threaded onto the adapter; and

Fig. 5 is a detail of a modified form of the adapter shown in Figs. 2 and 3.

In the drawings Fig. 1 shows a rigid bottle 1 made of glass, earthenware, plastic or the like. The adapter 2 is of flexible plastic such as polyethylene, etc. This adapter is provided with the annular flange 3 which is held to the bottle by the relatively rigid open cap 4 of plastic or the like. The rigid closure cap 5 is threaded onto the cap 4.

There is an opening through the adapter through which liquid may be poured. The adapter is provided with the pouring lip 8. Any liquid dripping from the pouring lip or running down the outside of the adapter after pouring, is caught in the channel 9. This channel encircles the opening through the adapter and drains from the front to the rear where liquid running back through the channel is returned to the bottle through the opening 11 between the wall portion 12 and the bottom cylindrical portion 13 of the adapter from which the baffle 14 projects. The baffle limits the amount of liquid that can be poured through the adapter so that none will run out through the opening 11, and performs such other functions as providing a smooth flow of liquid from the adapter, etc. The wall 17 rises from the floor of the channel and retains within the channel any liquid being returned to the bottle.

The wall 17 has a further function. The closure cap 5 is threaded onto the open cap or hold-down ring 4 at 20. The apron 21 which contains internal threads is of greater diameter than the dome 23. Radially inward from the apron 21 and preferably at the bottom of the dome is the lip 24, the outer surface 25 of which tapers inwardly. As the closure cap 5 is screwed onto the open cap 4, the upper edge of the flexible wall 17 of the adapter is squeezed between the wall 30 of the open cap 4 and the lip 24 on the closure cap 5. The surface 25 is sloped so that the top of the wall 17 is squeezed as the cap 5 is turned down on the threads 20 on the open cap. In this way a liquid-tight seal is formed over the adapter which prevents leakage of any liquid from the run-back channel or the bottle in the event the bottle is turned over. It will be noted that the bottom surface 31 of the closure cap 5 does not seat against the shoulder 32 on the cap 4 because this would limit the amount that the cap 5 could be tightened against the wall 17. As shown, the cap 5 is tightened until an adequate seal is formed with the wall 17.

The externally threaded wall 30 of the cap 4 is of smaller diameter than the apron 35 which is screwed onto the bottle. This necessitates the shoulder 32 which extends outwardly above the flange 3 of the adapter and presses it against the end of the bottle. It will be noted that the lower surface 38 of the cap 4 does not seal against the flange 39 of the bottle, but it is possible to

screw the cap 4 onto the bottle any desired distance to form a tight seal between the flange and the end of the bottle.

The cap 4 is provided with a lip 40 at the base of the wall 30. This lip presses against the flange 3 at about the center of the end of the bottle and assists in making a tight seal between the flange 3 and the end of the bottle. It is noted that in the preferred form illustrated in Fig. 1, the top surface of the flange is not flat but the outer edge 42 is higher than the surface located immediately inwardly from it. This tends to apply pressure to the downwardly projecting portion or tongue 43 at the outer edge of the lower surface of the flange. This portion 43 is provided with the downwardly and outwardly slanting surface 44 which makes contact with the outer rim of the end of the bottle. As the cap 4 is screwed on the bottle and the flange 3 is pressed against its end, this tapering tongue 43 is squeezed between the edge of the bottle and the inner surface of the cap, and makes a tight seal.

A tight seal is likewise formed at the inner rim of the end of the bottle by the downwardly projecting annular tongue 50. The inner wall of the tongue is substantially perpendicular when no pressure is applied to it. The outer surface of the bottom tapers downwardly and inwardly. The tongue is relatively thin at the neck 51 where it joins the adapter. This relatively thin portion between the adapter and the portion which contacts the inner rim of the end of the bottle permits the tongue to flex inwardly, as shown, when pressure is applied to it. Such flexing occurs without distortion of the adapter because the thin neck accommodates itself to the pressure applied.

Thus the adapter forms two independent seals with the end of the bottle by means of the tongues 43 and 50, and there is an air pocket 52 between these. One of these seals is at the outer rim of the end of the bottle and the other is at the inner rim. As the adapter is pressed onto the end of the bottle, the air in this pocket is compressed. The volume of the pocket is ordinarily so much less than the space in the top of the bottle, that the air in the pocket 52 is under greater pressure than any air or gas in the bottle. This tends to prevent any leakage between the tongue 50 and the end of the bottle. Thus, the seal at the end of the bottle is triply tight, being secured by the tongues 43 and 50, and in addition, by the air pocket 52 which contains air under pressure.

In the manufacture of the adapter, the tongue 50 serves another purpose. This tongue and the bead 55 assist the bottom core of the mold in pulling the adapter out of the mold cavity.

The adapter shown in each of the drawings is a flexible adapter and forms an annular air pocket at the end of the bottle to which it is affixed, and also forms a seal on each side of the air pocket. In each construction the air in the pocket will be compressed. As illustrated, the seals need not be at the inner and outer edges of the end of the bottle, but one or both may be intermediate the edges. Likewise, as shown, such an air pocket may be formed on bottles having ends of different contours.

The flexible adapter 60 of Fig. 2 may be made of polyethylene, etc. The relatively rigid closure cap 61 may be of any hard plastic, metal, etc. The adapter and cap and rigid bottle 62 are all designed with a view to assembling the adapter and cap on the bottle in the manner illustrated in Fig. 3. The bottle is provided with external threads 63 onto which the internal threads in the cap 61 are screwed. The portion of the neck of the bottle from which the threads 63 project is of larger external diameter than the portion above it which includes the groove 64 and the protruding portion 65 above the groove. These are designed to receive the snap-on tongue 67 which projects downwardly from the adapter and hold it and the adapter on the bottle.

The adapter is of the general run-back type illustrated in Fig. 1, although the proportions of the various parts are not the same as in Fig. 1.

The upper end of the flexible wall 69 which surrounds the run-back channel fits into the groove 70 in the rigid cap. The surface 71 of this groove tapers downwardly and inwardly so that as the cap is tightened onto the bottle, the top of the flexible wall is squeezed in the groove, and a tight seal is formed. It will be noted that the bottom edge 72 of the cap does not contact the shoulder 73 on the bottle, but the extent to which the cap is threaded onto the bottle depends upon the resistance of the top of the wall 69 to the pinch of the groove 70.

Spaced inwardly from the tongue 67 is the annular tongue or rib 75 which is relatively pointed and forms a tight seal with the end of the bottle as the cap and adapter are seated on it.

Located radially inwardly from the rib 75 is the tongue 76. This tongue is of the same general design as the tongue 50 of Fig. 1 except that its dimensions are smaller. The lower surface tapers downwardly inwardly and the tongue is attached to the adapter by a relatively thin neck. This permits the tongue 76 to flex inwardly, as shown in Fig. 2, when pressure is applied. The inner wall of the tongue 76 is vertical when out of contact with the bottle.

The cap and adapter shown in Fig. 2 are so designed that when the adapter is put in the cap and the cap is held in the position shown in Fig. 3 over the bottle, the adapter will remain in the cap. One way of accomplishing this is for the wall 80 of the cap to taper inwardly ever so slightly and for the outer surface 81 of the adapter to taper at about the same angle or a slightly greater angle. Then when the cap is inverted, and the adapter in inverted position is placed in the cap the adapter will slide downwardly in the cap until it reaches a position at which it is firmly held by the cap and the two can thereafter be held in the position shown in Fig. 3 without danger of the adapter falling out of the cap.

Below the wall 80 the cap widens at 93. This gives sufficient room between the wall and the projection 65 on the mouth of the bottle for the tongue 67 to slide over the projection into the groove 64.

I now describe how the adapter and cap are assembled on the bottle after it has been filled. The adapter is placed in the cap, preferably by inverting both and simply dropping the inverted adapter in the inverted cap. Alternatively, the adapter may be forced into the cap. The adapter is held by the cap so that when the two are thereafter turned upright (as shown in Fig. 3) the adapter will remain in the cap. There are several ways of holding the adapter in the cap, as by providing a bead on the inner wall of the cap or the outer wall of the adapter and a complementary groove on the other surface, or by wedging the adapter in the cap, or by having a portion of the adapter pinched by a suitable arrangement in the caps, etc. Whatever means is used for holding the adapter in the cap, after the bottle has been filled the two are held over the bottle, as shown in Fig. 3. Then the cap is pressed down onto the bottle and screwed onto it, and this causes the tongue 67 of the adapter to widen over the projection 65 on the bottle and to snap into the groove 64. The adapter is thus snapped onto the bottle and will be held on the bottle even when the ultimate consumer unscrews the cap from the bottle to pour the contents from the bottle.

When the cap is lowered onto the bottle with the adapter held in the cap, as illustrated in Fig. 3, the internal threads on the cap engage the external threads 63 on the bottle before the tongue 67 touches the outer end of the bottle. Then as the cap is screwed onto the bottle the tongue 67 is drawn into contact with the bottle and is widened over the projection 65, and eventually is snapped into the groove 64 before the cap is screwed the final distance onto the bottle. The tongue 67 holds the adapter firmly on the end of the bottle and

after it has been firmly seated in the groove 64 it resists turning with the cap. When the tongue 67 fits in the groove 64 it compresses tongue 76 sufficiently to hold it tight to the end of the bottle thereby preventing leakage between the bottle and the adapter when cap 61 is removed from the bottle. When the cap is unscrewed by the ultimate consumer the adapter does not turn and is not lifted from the end of the bottle.

The bottle with the snap-on holding arrangement (groove 64 and projection 65) of less diameter than the threaded neck of the bottle is novel and is claimed herein as my invention.

In the arrangement shown in Fig. 4 the closure cap 84 is of flexible material and may be polyethylene. The adapter 85 is likewise flexible and may be made of polyethylene or the like. The open cap 86 is relatively rigid as is also the bottle 87 which may be made of glass, earthenware, plastic or the like. The cap 86 is screwed onto the bottle when the adapter is positioned on the bottle and is not removed until the adapter is removed. This open cap applies pressure to the flexible flange 88 of the adapter so that there is no leakage from the bottle. The flexible cap 84 makes a tight seal with the adapter so that there is no leakage between it and the adapter.

The outer edge of the flexible flange 88 projects upwardly at 89 and downwardly at 90. The pressure of the shoulder 91 of the cap 86 against the upper rim 89 of the adapter is transmitted to the lower rim 90 and insures close contact between this rim and the outer rim of the top surface of the bottle.

The adapter itself is of the general run-back type illustrated in the preceding drawings. The tongue 92 is similar in construction to the tongue 76 of Figs. 2 and 3. It forms a tight seal with the inner rim of the top of the bottle. In order to unite the tongue 92 to the adapter by the thin neck 93 it is necessary that the tongue 92 be spaced from the lateral flange 88 of the adapter. The inner rim 98 at the bottom of the lateral flange 88 is pointed downwardly and when the adapter is drawn against the bottle by the cap 86 this inner rim forms a tight seal with the top of the bottle. The air pocket 94 between the tongue 92 and the point 98 contains air which is compressed as the adapter is drawn to the bottle. This tends to prevent leakage of any liquid outward around the tongue 92.

The closure cap 84 is of flexible material and ordinarily will be of much the same composition as the adapter. As the cap is threaded onto the bottle, the top of the wall 95 around the run-back channel is pinched in the groove 96. The outer surface 97 of the tongue which projects downwardly from the bottom edge of the dome of the cap 84 slants downwardly inwardly so that the tighter the cap is screwed onto the adapter the tighter the wall 95 is pinched. There is thus no leakage of any liquid between the adapter and the cap 84. The top of the opening 96 is very slightly narrower than the top of the wall 95 so that the latter is never brought into contact with the former because this insures a seal between the wall 95 and both the wall of the cap and the tongue 97.

Figure 5 shows a modification of the adapter shown in Figs. 2 and 3. The tongue 100 which fits into the groove 64 of the bottle is of relatively uniform thickness instead of being bulbous. This facilitates its removal from the mold in which it is formed. The bulbous tongue 67 of the adapter of Figs. 2 and 3 must be squeezed through the narrow annular opening which forms the thin neck by which the bulbous part of the tongue is attached to the adapter. By forming the tongue of substantially uniform thickness, such resistance during removal from the mold is avoided. The adapter of Fig. 5 makes contact with the bottle at its rims. There is no intermediate point of contact as by the rib 75 of the adapter illustrated in Figs. 2 and 3.

In the arrangements illustrated in Figs. 1 and 4, the open cap is threaded on to the bottle and the closure cap is threaded on to the open ring (Fig. 1) and the adapter (Fig. 4). Both threads may turn in the same direction; i. e., they may both be right hand threads or left hand threads. Then when one attempts to screw off the cap, the whole assembly may be screwed off of the bottle. If, however, the threads are different, one being left hand and the other right hand, this is impossible.

The molds in which the adapters are formed are advantageously designed so that the parting lines do not coincide with any sealing surfaces of the adapters. All sealing surfaces are therefore smooth and formed exactly to predetermined dimensions.

Tongues 50, 76, 92 and 97 are shown as being more or less bulbous. When large, it may be difficult to remove a tongue of this shape from the mold. The tongues may be shaped as desired to perform the intended function.

Although various modifications are shown in the accompanying drawings, the invention is not limited thereto as will be evident to the man skilled in the art. The invention is described more particularly in connection with use of the adapter on bottles, although the adapters shown may be used on tin containers, etc. Although particularly designed for use with an adapter provided with a run-back channel, other adapters are included in the appended claims.

This application is a continuation-in-part of my applications Serial Nos. 130,432 filed December 1, 1949, which is Patent 2,601,039, and 172,167 filed July 5, 1950, which is Patent 2,601,040.

What I claim is:

1. In combination with the neck of a container and fastened thereon, an adapter of flexible resilient plastic material with an opening therethrough and the base of which forms continuous seals around the end of the neck in two locations spaced radially from one another with an air pocket between them adjacent the end of the neck, and a closure cap which seals the opening.

2. In combination with the neck of a container and fastened thereon, a spout adapter of flexible resilient plastic material with an opening therethrough and the base of which forms continuous seals around the end of the neck at its inner and outer rims with an air pocket between the seals adjacent the end of the neck, and a closure cap which seals the opening.

3. In combination with a rigid neck of a container, a flexible resilient plastic adapter with an opening therethrough and a flange against the end of the neck, and a rigid cap fastened to the bottle and provided with a surface which covers the outer portion of the flange and presses it to the end of the neck.

4. The combination of claim 3 in which there is an annular air pocket around the bottle between the flange and the end of the bottle, with the flange sealed to the end of the bottle continuously on each side of the air pocket.

5. In combination with a rigid neck of a container, a flexible resilient plastic adapter with an opening therethrough and a bottom portion thereof snapped over the end of the neck and held thereon, and a rigid cap which encloses the adapter and seals the opening and is fastened onto a portion of the neck which is larger in outside diameter than the portion onto which the adapter is snapped, and is below it.

6. The combination of claim 5 in which a portion of the adapter overlies the end of the neck and the cap presses the adapter against the end of the neck.

7. In combination with a rigid neck of a container, a flexible resilient plastic spout adapter with an opening therethrough and having a wall surrounding the opening, and a closure cap which encloses the spout and seals the opening, the top of the wall being squeezed in a groove in the underside of the cap.

8. The combination of claim 7 in which one wall of

395





the groove slants downwardly in contact with the top of the wall of the adapter.

9. In combination, a bottle and flexible resilient plastic adapter, the bottle having external threads on the neck spaced from the end thereof, a portion of smaller outside diameter between the threads and said end, and a groove surrounding the neck between the threads and said portion of smaller diameter, and the adapter having a bead on its inner surface engaged in the groove.

10. The method of assembling a rigid bottle, a rigid closure cap adapted to be fastened to the bottle, and a flexible resilient plastic adapter with an opening therethrough which adapter when inside the cap is adapted to be fastened by pressure to the bottle, which method comprises putting the adapter in the cap, and then fastening the cap to the bottle and thereby exerting pressure on the adapter against the top of the bottle and thereby fastening the adapter to the bottle.

11. In combination a rigid neck of a rigid container, a flexible resilient plastic adapter with an opening therethrough and fastened to the neck, and a rigid closure cap independently fastened to the neck over the adapter and sealing the opening, the outer surface of a wall of the adapter being in contact with the inner surface of a wall of the cap so that were the container not there the adapter would be supported by the cap.

12. In combination, a flexible spout adapter with an opening therethrough and held to the end of a rigid bottle or the like by a rigid open cap through which the spout of the adapter protrudes, the cap having an externally threaded wall rising around the opening, and a rigid closure cap which encloses the top of the spout and seals the opening and is threaded onto said threads on the wall; the adapter being provided around its spout with a cylindrical wall of uniform height which is substantially the same height as said externally threaded wall, upper portions of said walls being in contact with one another, an annular projection protruding downwardly from the closure cap inwardly of said adapter wall having its outer surface slanting inwardly downwardly in contact with the top of the adapter wall and pressing it against the top of the externally threaded wall of the cap.

13. In combination a rigid bottle or the like, a flexible resilient plastic spout adapter with an opening therethrough and a lateral flange touching the end of the bottle in two radially spaced annular locations, and a rigid cap attached to the neck, there being an annular lip projecting downwardly from the under surface of the cap which applies pressure to the top of the flange intermediate said annular locations.

14. A container with a flexible resilient plastic adapter fastened at an opening therein, the adapter having a passage therethrough adapted to serve as a pouring outlet, and a cap which is fastened to the container and the inner surface of which throughout a continuous area around opening makes sealing contact with the adapter.

15. A container with an adapter fastened at an opening therein, the adapter having a passage therethrough adapted to serve as a pouring outlet, a spout at the upper end of the passage, a channel in the adapter around the



passage which includes a higher portion under the spout and a lower portion at the opposite side of the adapter with an opening from said lower portion into the passage so that liquid collecting in the channel from the pouring spout will drain to the opening and thence to the passage, the outer edge of the channel being defined by an annular wall of uniform height which encircles the passage, and a cap which encloses the top of the adapter and is fastened to the container and the inner surface of which makes sealing contact with the top of the wall.

16. A container with a flexible resilient plastic adapter fastened at the opening therein, the adapter having a passage therethrough adapted to serve as a pouring outlet, a spout at the upper end of the passage, a channel outside of the passage which includes a higher portion under the spout and a lower portion at the opposite side of the adapter with a drain for supplying liquid from said lower portion to the interior of the container, the outer edge of the channel being defined by an annular wall which extends to a uniform height above the opening in the container, and a cap which encloses the top of the adapter and is fastened to the container and the inner surface of which makes sealing contact with the top of the wall.

17. In combination with a rigid neck of a container, a flexible resilient plastic adapter with an opening therethrough and a flange against the end of the neck, and a rigid cap fastened to the neck, a continuous and generally annular portion of the cap being in pressure contact with the flange and pressing it into sealing contact with the end of the neck.

18. In combination with the neck of a rigid container and fastened thereon, an adapter of flexible resilient plastic material with an opening therethrough and the base of which is formed with two continuous projections which make continuous seals with the end of the neck in two locations spaced radially from one another with an air pocket between them adjacent the end of the neck.

19. In combination with the rigid neck of a container a flexible resilient plastic adapter with an opening therethrough and a flange against the end of the container, and a rigid cap fastened to the neck and the under surface of which covers the outer portion of the flange and presses it to the end of the neck, the flange thickening at its perimeter so that the edge of the flange extends both above and below the portion of the flange adjacent it, and such thickened edge constituting the outer portion of the flange which is compressed between said under surface of the cap and the end of the neck.


**References Cited** in the file of this patent

UNITED STATES PATENTS

| | | |
|---|---|---|
| 512,438 | Hallowell | Jan. 9, 1894 |
| 1,768,098 | Aulbach | June 24, 1930 |
| 1,892,788 | Schwartz | Jan. 3, 1933 |
| 2,222,594 | Metcalf | Nov. 26, 1940 |
| 2,249,832 | Hubschman | July 22, 1941 |
| 2,573,378 | Zurlinden | Oct. 30, 1951 |
| 2,630,944 | Wheaton | Mar. 10, 1953 |

PLAINTIFF'S EXHIBIT J

396

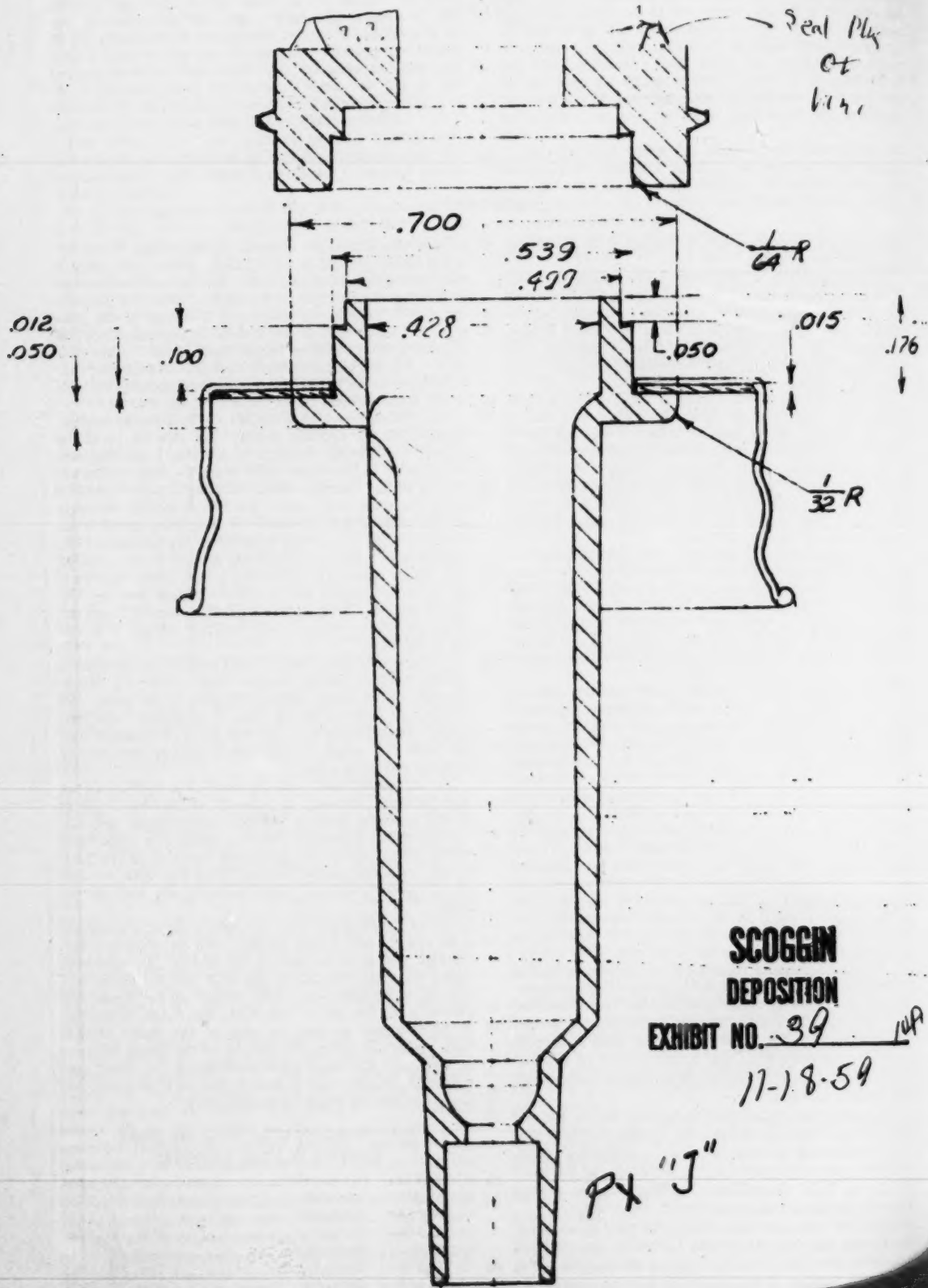


SCOGGIN
DEPOSITION
EXHIBIT NO. 39
11-18-59

Pl "J"

[1079] PLAINTIFF'S EXHIBIT L.

(Scoggin Deposition. Exhibit No. 40.)

Baxter I. Scoggin
Chester M. Turner
Roland L. Rhodes

February 13, 1957

SUGGESTED CHANGES IN SPRAYER PARTS

A. Barrel (Body).

1. Reduce shoulder diameter from 0.975" to 0.700". (Bottle opening 0.730" to 0.740", Can Opening 0.710").
2. Reduce shoulder thickness from 0.062" to 0.050".
3. Lower position of shoulder on barrel from 0.140" from top of barrel to 0.177" from top.
4. Modify hub according to drawing by Chester M. Turner dated February 11, 1957.
   a. Increase hub diameter to 0.539".
   b. Lesser diameter of hub is 0.499".
   c. Overall height of hub is 0.177".
   d. Height of greater diameter hub is 0.127".
   e. Height of lesser diameter hub is 0.050".
   f. Bevel connecting greater and lesser diameter is 2°.
5. Remove one of vent holes.
6. Re-design one remaining vent hole to reduce possibility of damaging seal.

B. Collar (Ring).

1. Re-design so that collar will fit onto re-designed barrel hub.
2. Consider placing a ridge on top of collar to act as seal between collar and cover cap.

C. Metal Caps, with hole and inner liner.

1. Increase hole diameter from 0.520" + 0.010" to 0.560" + 0.010" if barrel hub diameter is increased.

2. Purchase caps with appropriate inner liner, paper pulp or polyethylene, having a proposed thickness of 0.015".

Note: (This may have to be increased to 0.020" or 0.025". If this happens then "shave off" 0.005" or 0.010" from top of shoulder for required space.)

[1080] 3. Purchase caps with height of 0.404" or less.

Note: "H" Dimension on O-I bottle is 0.385" to 0.405". "H" Dimension on Continental can is 0.500".

D. Polyethylene cover caps.

1. Remove ridge from bottom surface of cap.
2. Knurl lower side of cap.
3. Consider modifying sealing ridge to coincide with ridge on collar.

E. Orifice.

1. Presently trying change in Butterfly of head which may affect orifice.
2. Also considering thinner orifice.

F. Head.

1. Testing one head with butterfly hole partially filled with knob type projection.
2. Consider modifying sealing edge to obtain better seal of head to plunger.

CHESTER M. TURNER

CMT: vk

PLAINTIFF'S EXHIBIT M

399

BY ..... DATE 2-11-57 SUBJECT [illegible] CHANGE [illegible] SHEET NO. ..... OF .....

CHKD. BY ..... DATE ..... JOB NO. .....

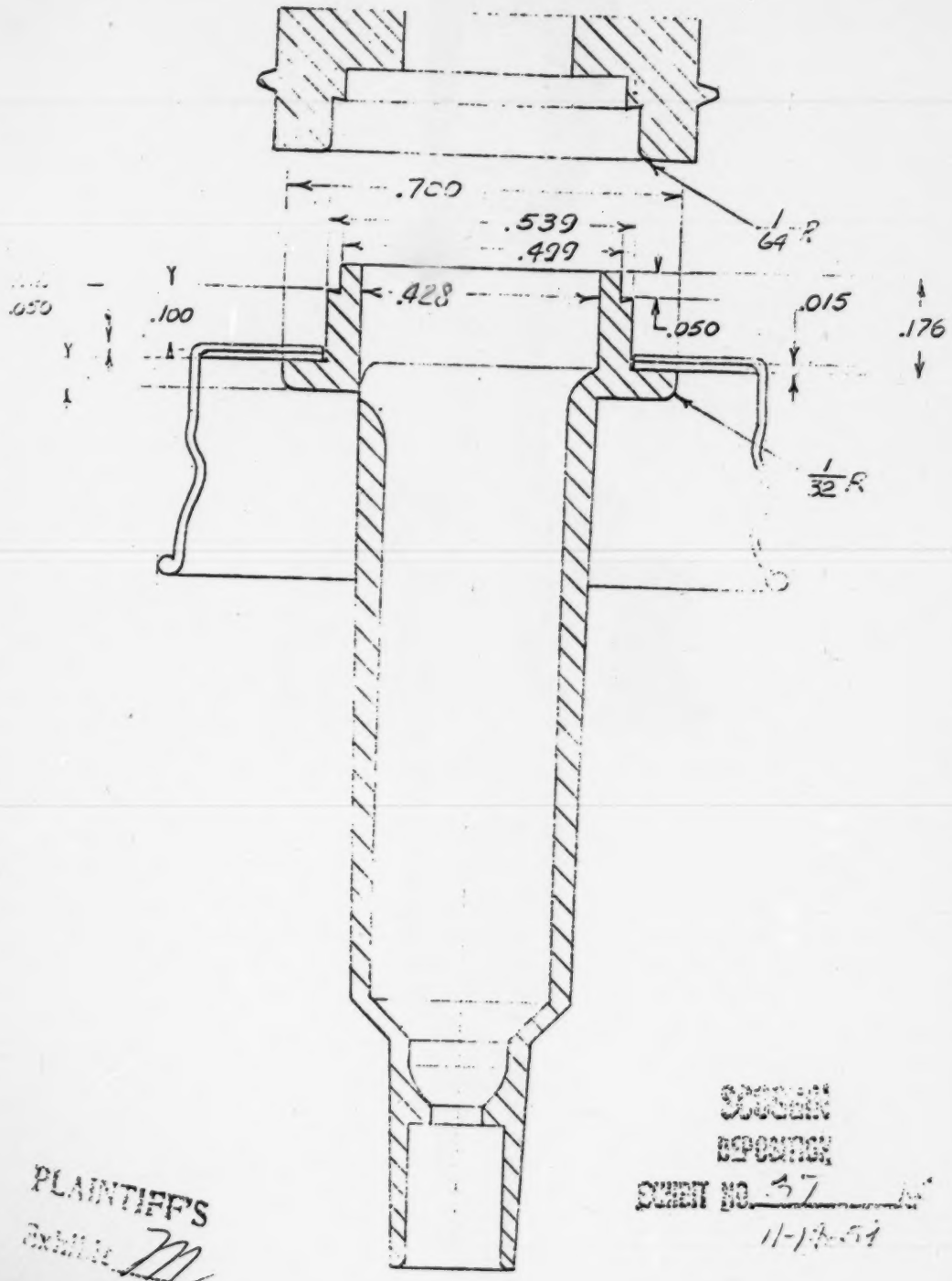


SCOGGIN
DEPOSITION
EXHIBIT NO. 37
11-14-57

PLAINTIFF'S
Exhibit M
3/7/6

PLAINTIFF'S EXHIBIT P

BAKAN 1 SPRAYER

401

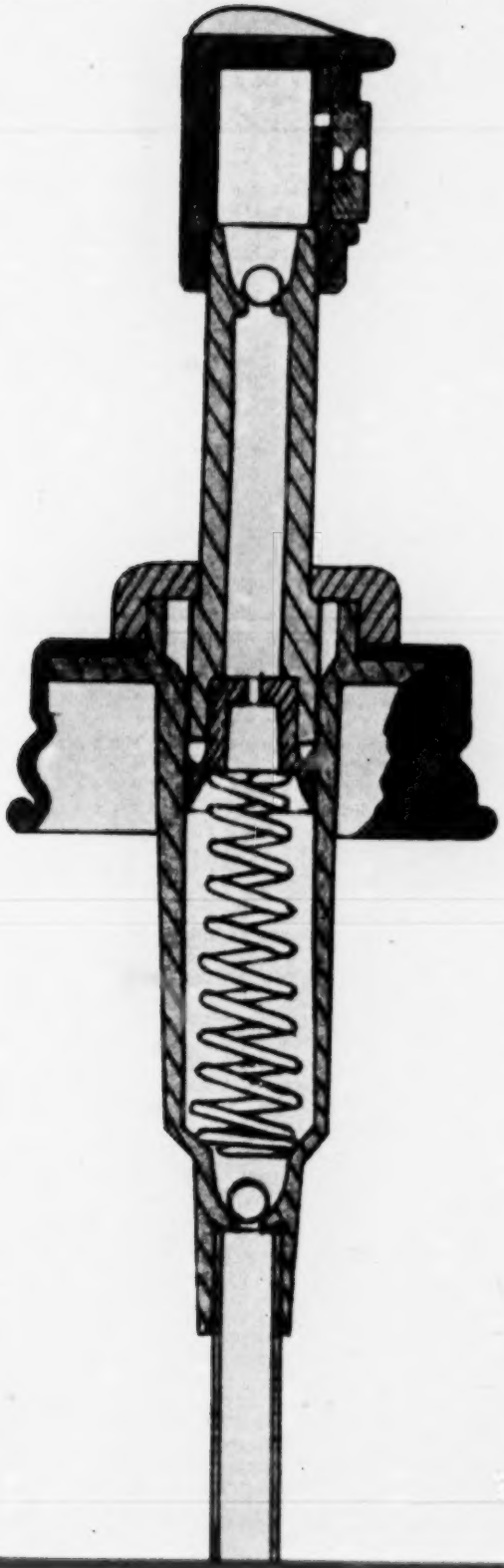

PLAINTIFF'S EXHIBIT Q
403

PLAINTIFF'S
Exhibit Q
3/7

Bakan 2 Sprayer - As First Made

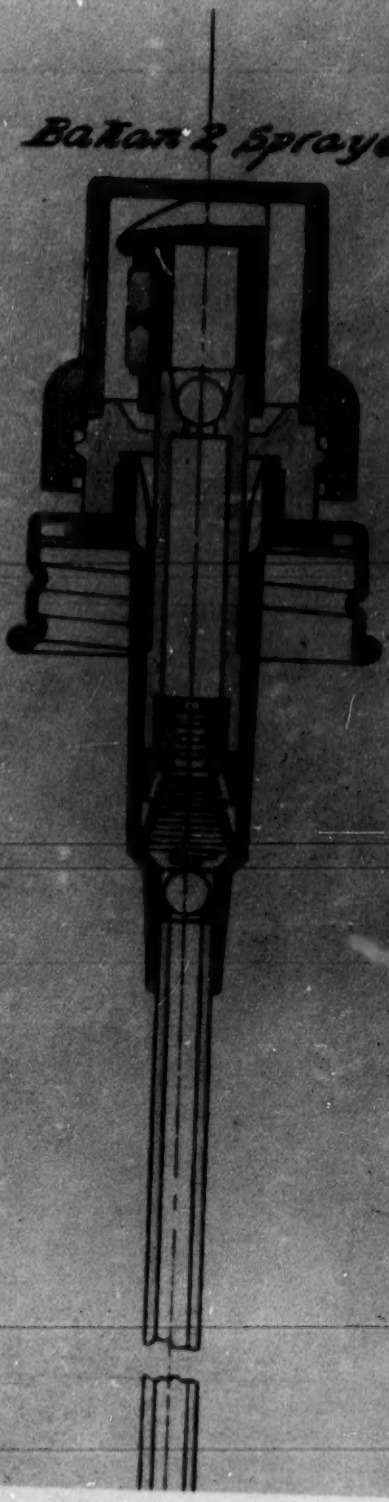

PLAINTIFF'S EXHIBIT S

BAKAN 3 SPRAYER

405

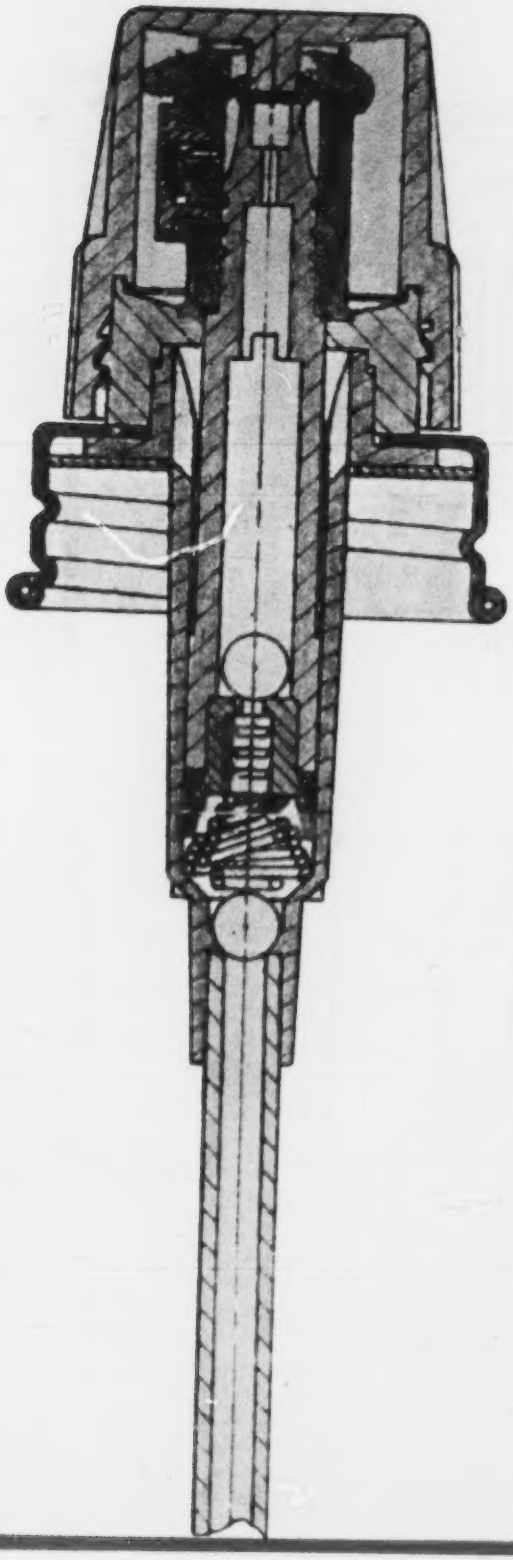

PLAINTIFF'S EXHIBIT T

407

June 7, 1938. F. W. LOHSE 2,119,884

LIQUID SPRAYER

Filed June 22, 1936

Fig. 1.

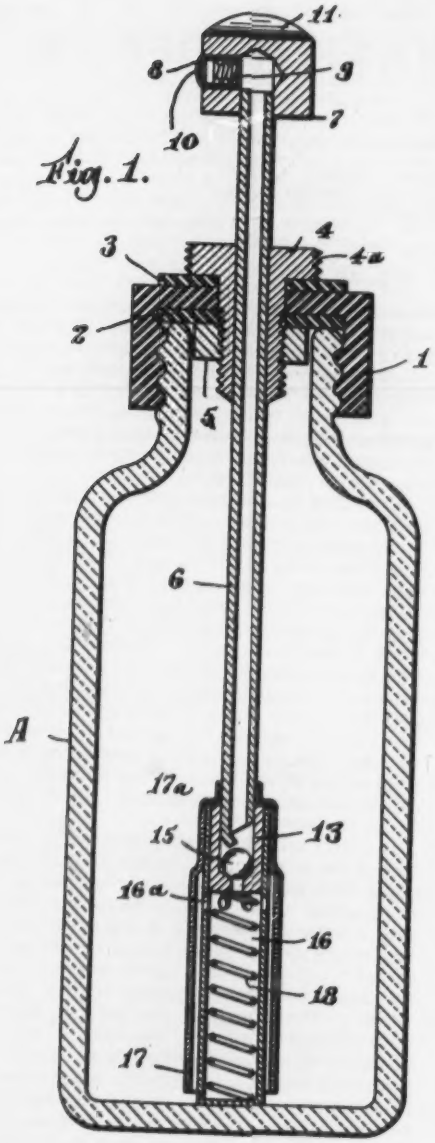


Fig. 2.

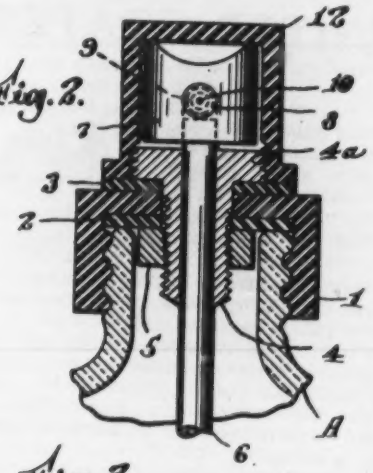


Fig. 3.

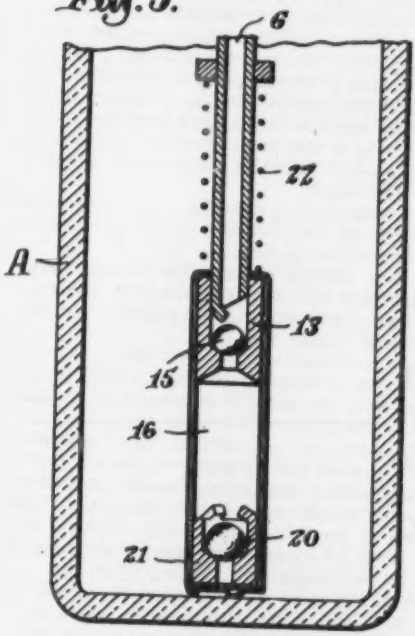


Inventor
F. W. Lohse
by
Geo. N. Goldsborough Attorney

Patented June 7, 1938 2,119,884

408

# UNITED STATES PATENT OFFICE

2,119,884

## LIQUID SPRAYER

Frederick W. Lohse, Attleboro, Mass., assignor to T. J. Holmes Company, Inc., Norton, Mass., a corporation of Massachusetts

Application June 22, 1936, Serial No. 86,461

1 Claim. (Cl. 221—85)

This invention relates to liquid sprayers of the general type used for spraying liquids upon windows, house plants, clothing and for other purposes and is intended to provide simple and effective means for economically performing its functions while also making provision for convenient and safe transportation when filled, or partly filled, with liquid without danger of leakage of the contents.

With these objects in view the invention comprises a bottle closure removably attachable to a bottle or other container and provided with a movable plunger piston and a liquid chamber, the closure being provided with removable sealing means which serves both to prevent leakage of the liquid content to the outside and to retain the plunger in a depressed position to avoid the filling of the outlet conduit which forms a hollow stem for the piston.

In the accompanying drawing I have illustrated embodiments of the invention to different forms of sprayer devices, in which—

Fig. 1 is a vertical section illustrating a container provided with my improvement, the sealing cap being removed and the plunger standing in its normal raised position.

Fig. 2 is a central section on a plane at right angles to Fig. 1 showing the upper part of the container with the plunger depressed by engagement with the leak-proof sealing cap.

Fig. 3 illustrates a modified form of piston chamber construction in which the coiled spring is placed outside of the piston chamber and above it, instead of inside and beneath the piston. The diameters of the piston stem and its bore are, for the sake of clear illustration, much exaggerated in comparison with actual practice.

In the practice of my invention according to the illustration in the drawing, A indicates a bottle or similar container having an externally threaded neck portion for the reception of an internally threaded closure or cap 1, which is provided with interior washer 2 and an exterior washer 3 around a central opening through which is inserted a central headed thread 4, whose head is externally threaded and whose inwardly projecting shank portion is threaded to receive a clamping nut 5.

The threaded plug 4 is provided with a smooth cylindrical axial bore and in this bore or passage is slidingly mounted a close fitting hollow plunger stem 6. To the top of the plunger stem 6 is secured a spraying block having, in this case, a transversely bored passage for the reception of a hollow nozzle member 8, in which is inserted an externally threaded plug to assist the spraying of the liquid but restricting its escape and giving it a whirling motion before it passes out through the very small nozzle opening 10. The sprayer block 7 is also provided with a diametrical groove or recess extending in the vertical plane of the spray nozzle, so that when the finger is pressed into this groove the spray points in the direction of the finger.

To render the sprayer safe for transportation in a trunk or container with other articles, which would be injured by leakage of the liquid, I provide a cup-shaped sealing cap 12 dimensioned to cover and overlap the sprayer head 7, the bottom or open end of the cap being internally threaded to screw upon the threads 4a of the central member 4 of the closure cap. While a few drops of liquid may leak out of the nozzle under certain conditions, nevertheless it can not escape to the outside because the sealing cap, when screwed down tightly against the washer 3, forms a positive and reliable seal wholly preventing any possible escape of the liquid, either through the nozzle or through the joint between the central plug 4 and the closure.

A cylindrical piston 13 is secured to the lower end of the plunger stem 6 and, as shown, is provided with an internal valve chamber in which is mounted a check valve 15 in the form of a ball closing the central passage in the lower end of the piston when the piston moves to the top of the surrounding piston chamber 16 after the liquid has been expelled by the downward stroke. The object of the valve is to prevent weakening the partial vacuum in the piston chamber 16 created by the upward stroke of the pump and means is provided to prevent the check valve member 15 from closing the liquid outlet passage formed through the stem 6 in any suitable manner, as by means of an in-turned lip 14 at the lower end of the piston stem.

It will be observed that the piston or pump chamber is closed at the bottom and is surrounded by an elongated shell annularly spaced from the outside of the piston chamber. The piston chamber is also provided with inlet holes 16a immediately below the level of the bottom of the piston when the piston is in raised position. A helical spring 18 is seated upon the closed bottom of the pump chamber and exerts an upward pressure or thrust against the bottom of the piston. The outer shell 17 has its upper portion contracted to fit snugly around the open or upper end of the piston chamber 16 and has its upper portion in-turned to form an annular

flange 17ª, which closely fits around the piston stem and serves as a stop for the upward stroke of the piston.

When the piston is depressed by pressure of the fingers upon the spray block 7 after its bottom has passed below the level of the liquid inlet opening 16ª, the only escape for the liquid is through the hollow piston stem to the sprayer head, as it will be seen that the piston itself acts as a valve preventing the escape of liquid through the passages 16ª during the remainder of the down stroke after it has passed below said passages. Upon the release of pressure on the spray head the piston is rapidly returned to its uppermost position creating a partial vacuum, so that the liquid in the bottle, so long as the lower end of the outer shell or skirt 17 is submerged, rushes up through the inlet passage formed between the outer shell 17 and the pump chamber and fills the chamber. The piston itself acts as a trap on substantially its whole downward stroke to expel the liquid through the tube 6 and on the upstroke, as soon as it uncovers the opening 16ª forming part of the liquid inlet passage, creates a suction for the purpose of supplying the piston chamber with more liquid.

In Fig. 3 is shown a pump chamber in which the piston 13 does not act as a valve and a check valve 20 is provided at the bottom inlet passage resting upon a centrally bored seat member 21, the bottom of the piston chamber being provided with a valve-controlled inlet opening. The object of extending the exterior skirt or shell 17 down almost to the bottom of the pump chamber, to which it is secured, is to permit the removal of liquid until the bottle is practically emptied.

While the return spring is shown in Fig. 1 as inserted in the piston chamber itself, in the form shown in Fig. 3 I have shown the return spring 22 surrounding the piston stem and interposed between the top of the piston chamber and a stop member 23 secured to the piston stem 8 at a suitable distance above the piston 13 to permit the piston to have its full stroke downward and upward.

The closure parts are shown in the drawing as composed of rubber or bakelite, so that the device may be used for liquids which are likely to attack metal, but obviously they may be made of any suitable material.

What I claim is:

In a spraying device for liquids, a bottle having a threaded neck, a reciprocating pump mounted within the bottle, a hollow pump rod connected to the pump for reciprocation thereof and extending outwardly through the bottle neck, a cap for the bottle having a flat upper face and a threaded bore in which the bottle neck is received, an enlarged washer applied to the upper face of the cap, a washer applied to the bottom of the cap bore and engaging the end of the bottle neck, a hollow plug for supporting the pump rod, said plug having an enlarged externally threaded head of less diameter than the washers seated against the upper washer, and a threaded stem extending axially downwardly through the washers and cap, a nut on the threaded stem bearing against the inner washer and cooperating with the plug head to hold the washers and cap rigidly together, a sprayer block including a nozzle on the upper end of the pump rod and an inverted thimble-like sealing cap telescoped over the sprayer block and threaded on the plug head to bear against the upper washer.

FREDERICK W. LOHSE.

PLAINTIFF'S EXHIBIT U

410

Feb. 19, 1952 R. MELLON 2,586,687

CLOSURE CAP FOR LIQUID SPRAY CONTAINERS

Filed May 27, 1950

FIG. 1.

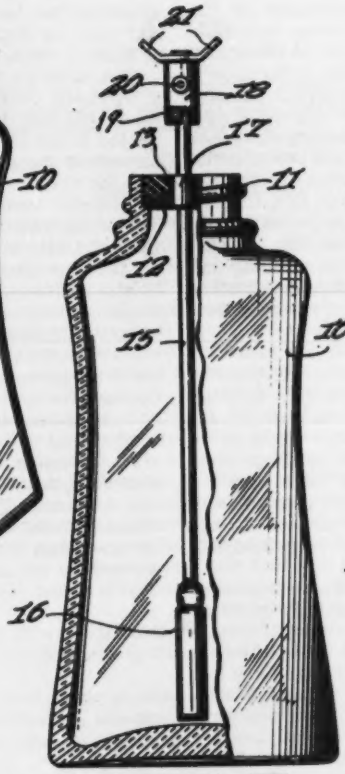


FIG. 2.

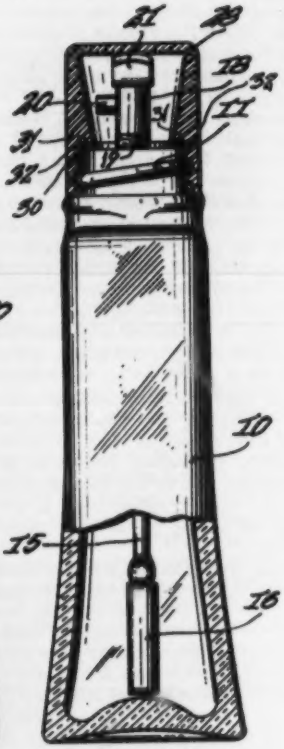


FIG. 3.

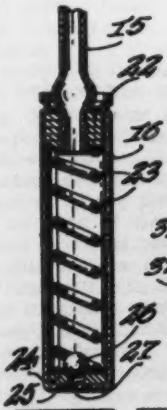


FIG. 7.

FIG. 4.

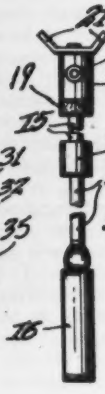


FIG. 6.

FIG. 5.

INVENTOR.
RUSSELL MELLON
BY
ATTORNEY.

Patented Feb. 19, 1952

411

2,586,687

# UNITED STATES PATENT OFFICE

2,586,687

## CLOSURE CAP FOR LIQUID SPRAY CONTAINERS

Russell Mellen, Sloatsburg, N. Y.

Application May 27, 1950, Serial No. 164,307

4 Claims. (Cl. 239—97)

1

This invention relates to new and useful improvements in pumps utilized for spraying liquids of various kinds from a bottle or the like.

More particularly, the present invention proposes certain improvements in spray pumps of the type commonly used to spray a liquid window cleaner on window panes, car windshields and other glass surfaces; to spray liquid insecticides, moth proofing liquids, deodorizers and liquid preparations to remove ice and sleet from automobile windshields; or for any other liquids of a similar type which are to be discharged in a fine spray or mist.

Heretofore, the spray or pump unit had to be purchased separately from the bottle which contained the liquid that had to be sprayed making it necessary to mount the spray or pump unit on the bottle and remove it therefrom each time that the liquid preparation was to be used. This resulted in a time consuming inconvenience accompanied by evaporation of the liquid preparation and, oft times, resulted in spilling of the bottle contents when carelessly handled during mounting and removing of the spray unit.

The known pump utilized for such spraying includes a valve immersed in the liquid in a bottle, said valve being closed in the normal position of the pump operating means and maintaining a quantity of liquid between itself and the spout means of the pump. This, it has been found, results in that said quantity of liquid rapidly evaporates and causes a financial loss to the user.

Another object of the invention therefore is the provision of removable cap means which not only seals the pump entirely within the bottle, but also encloses the pump so that no liquid is maintained between the said valve and the pump spout means.

For further comprehension of the invention, and of the objects and advantages thereof, reference will be had to the following description and accompanying drawings, and to the appended claims in which the various novel features of the invention are more particularly set forth.

In the accompanying drawings forming a material part of this disclosure:

Fig. 1 is a perspective view of a bottle in and on which the means of the invention are embodied.

Fig. 2 is a front view of the bottle with the cap means removed and with a portion thereof sectioned away.

Fig. 3 is an end view of Fig. 2, but with the

2

cap mounted in position on the top of the bottle and shown in vertical section.

Fig. 4 is an enlarged partial vertical sectional view of the cap per se.

Fig. 5 is a sectional view of the top portion of the bottle before the pump is mounted therein.

Fig. 6 is a view of the pump to be mounted in the bottle with the mid portion thereof broken away.

Fig. 7 is a sectional view of the bottom portion of the pump.

According to the invention a bottle 10 containing any liquid to be sprayed is provided with an externally threaded neck 11 and is sealed by a rubber plug 12 as shown in Figs. 1 and 5. The plug 12 has its top face flush with the top of the bottle 10 and is provided with a hole 13 in its center which, until the liquid in the bottle is to be utilized, is sealed by a puncturable membranous sheet 14.

The pump to be associated with this bottle for the purpose of spraying the liquid on a window pane or the like is illustrated in Figs. 2, 3, 6, and 7. The pump comprises a long tube 15 having its lower end slidably fixed in a cylinder 16 and having slidably mounted thereon a sleeve 17. According to the invention, the sleeve 17 is of slightly greater diameter than the cylinder 16 so that on puncturing the membrane 14 said cylinder can readily be passed through the hole 13 in plug 12. The wider sleeve 17 must be forced into said hole however and the effect is that the sleeve becomes fixed in the hole and the tube 15 is slidable up and down therein.

At its upper end tube 15 opens into a small housing 18 having a spout 20 through which liquid forced up through the tube 15 can be ejected. At the top of housing 18 there is provided a saddle-like finger piece 21 by which the tube 15 can be pressed downward into the cylinder 16.

A sponge rubber gasket 19 is secured around the tube 15 directly below the housing 18 to insure dependable closure when the cap is closed.

Within the cylinder 16 the end of the tube 15 has secured thereon a piston 22 which normally is held in the upper part of the cylinder by a coil spring 23 which bears on a washer 24 forming the base of the cylinder. Washer 24 is provided with a hole 25 which forms with a ball 26 seated therein a valve for the pump. In order to permit liquid entering the cylinder through the hole 25, the wall of said cylinder is continued downward beyond the washer 24 and is provided with a plurality of notches 27.

Normally the cylinder 16 is filled with the liquid contents of the bottle 10 so that if the tube 15 be depressed by finger piece 21, the piston 22 will force the liquid up through the tube and out of the spout 26. During this operation the ball is seated in the hole 25 and the liquid is not forced back into the bottle through said hole. The spring 23 is then allowed to restore piston 22 to the upper end of the cylinder 16, the liquid pressure forcing the ball 26 out of its seat during such restoration, and refilling the cylinder.

It will be seen that there is no seal between the liquid in the cylinder 16 and the opening in spout 26 so that when the bottle is laid aside the said liquid will evaporate. To prevent this the following means are provided:

Referring to Figs. 3 and 4, a cap 28 preferably of plastic is provided with internal threads 30 to screw onto the threaded neck 11 of bottle 10. Above the threads 30 the internal diameter of the cap is lessened to provide an annular shoulder 31 against which is located a ring-like gasket 32 of paper or similar material. As shown in Fig. 4, the gasket 32 bears against the rubber plug 12 in the neck of the bottle when the cap is drawn up on the bottle neck. Thus the pump is sealed within the cap. As a further precaution against evaporation the vertical, inner dimension of the cap is such that when the same is drawn up on the bottle neck it holds the tube 15 in depressed position so that the piston 22 is located in the bottom of the cylinder and prevents any liquid from entering the cylinder 16.

The construction is such that if the tube 15 is depressed slowly the liquid in the cylinder will not be forced up into the tube but will leak back into the bottle. Thus, the tube can be depressed slowly by the cap 28 and no liquid will spray from spout 26; and once the cap is secured in place, evaporation of the liquid in the bottle will be prevented.

From Fig. 4, it will be noted that the bottom portion of the outer periphery of the cap 28 is provided with a circular band of serrations 35 providing a grip for tightening the cap 28 onto the threaded neck 11 of the bottle and for loosening the cap when it is to be removed.

It will be seen, therefore, that once purchased the pump and cap of the invention can be utilized with a succession of the bottles of the invention, with the result that the amount of money expended for window cleaning is substantially reduced.

It is to be understood that the cap 28 may be of a flat or round top surface or of any other desired shape.

While I have illustrated and described the preferred embodiment of my invention, it is to be understood that I do not limit myself to the precise construction herein disclosed, and the right is reserved to all changes and modifications coming within the scope of the invention as defined in the appended claims.

Having thus described my invention, what I claim as new, and desire to secure by United States Letters Patent is:

1. Closure means for a bottle having an externally threaded neck closed by an apertured plug through which the tube of a pump is slidably extended and a discharge housing on the top end of the tube, said closure means comprising a hollow cap fitted over the top of the discharge housing and having internal threads engaging the external threads of the neck, said cap having a top wall spaced from the plug a distance less than the normal distance between the plug and the top of the housing so that said cap holds the tube and housing in a lowered position in which the bottom end of the housing is spaced slightly from the top of the plug, means within said cap holding the plug against accidental discharge from the neck, and means on the tube in the space between the plug and the housing sealing the passage of the tube through the plug.



2. Closure means for a bottle having an externally threaded neck closed by an apertured plug through which the tube of a pump is slidably extended and a discharge housing on the top end of the tube, said closure means comprising a hollow cap fitted over the top of the discharge housing and having internal threads engaging the external threads of the neck, said cap having a top wall spaced from the plug a distance less than the normal distance between the plug and the top of the housing so that said cap holds the tube and housing in a lowered position in which the bottom end of the housing is spaced slightly from the top of the plug, means within said cap holding the plug against accidental discharge from the neck, and means on the tube in the space between the plug and the housing sealing the passage of the tube through the plug, said plug holding means comprising an annular shoulder within said cap, said shoulder being spaced slightly above the top face of the plug, and a ring-like gasket within said cap between the shoulder and the plug.

3. Closure means for a bottle having an externally threaded neck closed by an apertured plug through which the tube of a pump is slidably extended and a discharge housing on the top end of the tube, said closure means comprising a hollow cap fitted over the top of the discharge housing and having internal threads engaging the external threads of the neck, said cap having a top wall spaced from the plug a distance less than the normal distance between the plug and the top of the housing so that said cap holds the tube and housing in a lowered position in which the bottom end of the housing is spaced slightly from the top of the plug, means within said cap holding the plug against accidental discharge from the neck, and means on the tube in the space between the plug and the housing sealing the passage of the tube through the plug, said sealing means comprising a gasket on the tube in the space between the top of the plug and the bottom of the housing.

4. Closure means for a bottle having an externally threaded neck closed by an apertured plug through which the tube of a pump is slidably extended and a discharge housing on the top end of the tube, said closure means comprising a hollow cap fitted over the top of the discharge housing and having internal threads engaging the external threads of the neck, said cap having a top wall spaced from the plug a distance less than the normal distance between the plug and the top of the housing so that said cap holds the tube and housing in a lowered position in which the bottom end of the housing is spaced slightly from the top of the plug, an annular shoulder within said cap, said shoulder facing and being spaced slightly above the top face of the plug, a ring-like gasket within said cap between said shoulder and the plug holding the plug in position in the neck, and a tubular gasket of soft rubber material on the tube in the space between the top of the plug and the bottom of

413





the housing sealing the passage of the tube through the plug.

RUSSELL MELLON.

REFERENCES CITED

The following references are of record in the file of this patent:



UNITED STATES PATENTS

| Number | Name | Date |
|---|---|---|
| 1,679,305 | Heller | July 31, 1928 |
| 2,063,058 | De Weal | June 8, 1937 |
| 2,096,042 | Irwin | Oct. 19, 1937 |
| 2,119,884 | Lohse | June 7, 1938 |

FOREIGN PATENTS

| Number | Country | Date |
|---|---|---|
| 441,014 | France | May 17, 1912 |

PLAINTIFF'S EXHIBIT V

4/4

Nov. 25, 1958 R. MELLON 2,861,839

COMBINATION CONTAINER, CAP AND SPRAYER

Filed Jan. 14, 1957 2 Sheets-Sheet 1

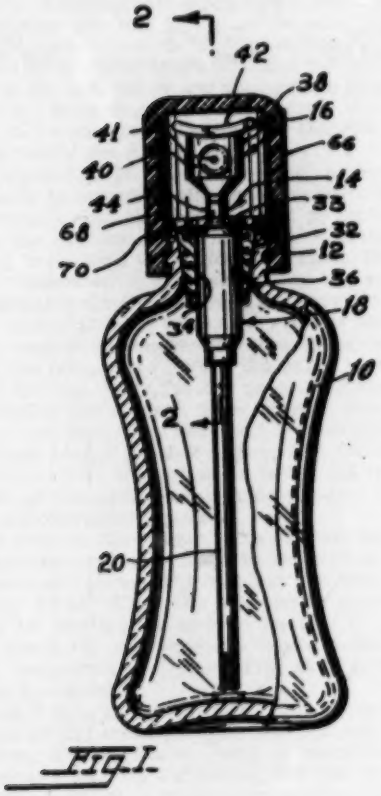


FIG. 1.

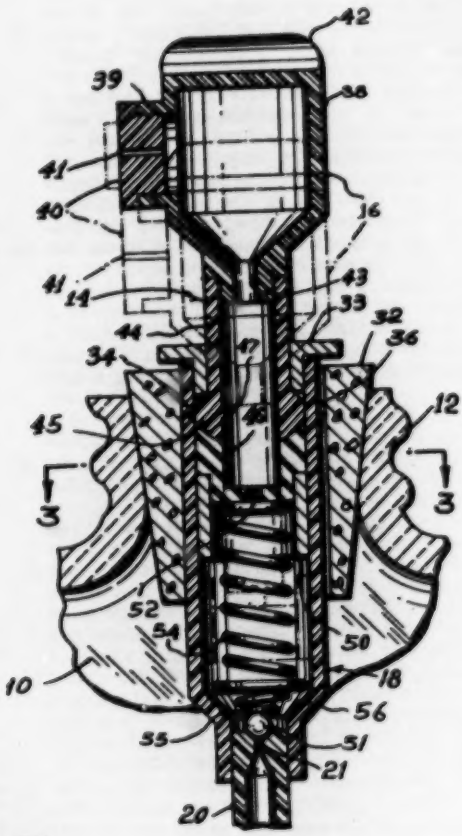


FIG. 2.

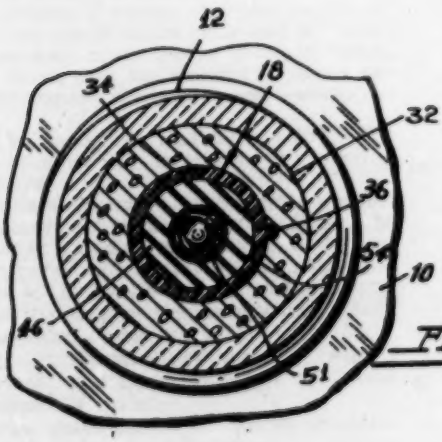


FIG. 3.

INVENTOR.
RUSSELL MELLON
BY
ATTORNEY

415

Nov. 25, 1958 R. MELLON 2,861,839

COMBINATION CONTAINER, CAP AND SPRAYER

Filed Jan. 14, 1957

2 Sheets-Sheet 2

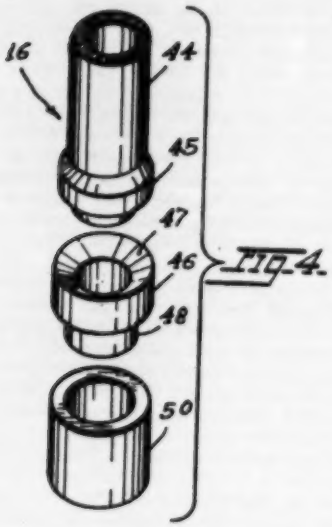


Fig. 4.

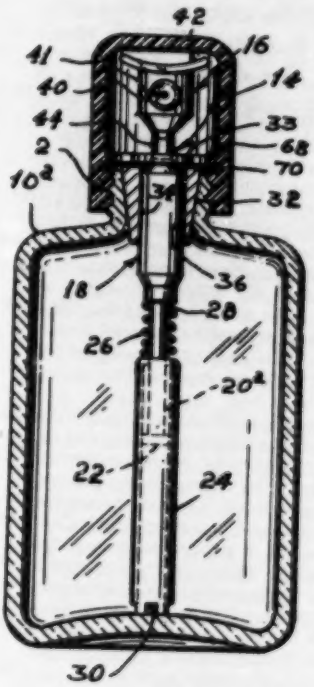


Fig. 5.

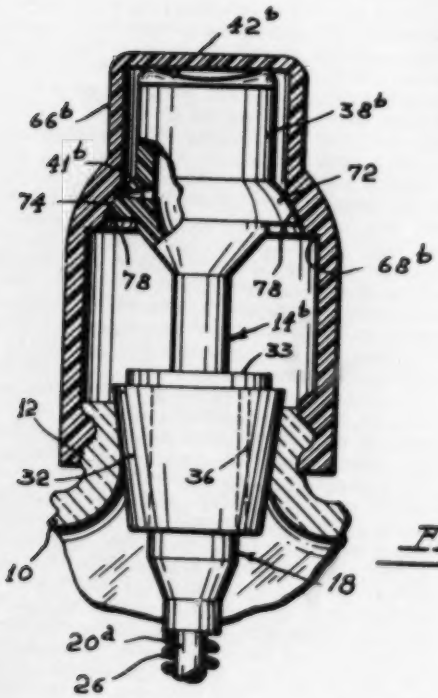


Fig. 6.

INVENTOR.
RUSSELL MELLON
BY
ATTORNEY

United States Patent Office 2,861,839 Patented Nov. 25, 1958



2,861,839

# COMBINATION CONTAINER, CAP AND SPRAYER

Russell Mellon, Sloatsburg, N. Y.

Application January 14, 1957, Serial No. 634,827

1 Claim. (Cl. 299—97)

This invention relates to a combination container of the bottle type, a removable closure cap therefor, and a spray device normally enclosed by said closure cap. The present invention represents an improvement over the device shown in U. S. Patent No. 2,586,687, issued to me on February 19, 1952. The main object of the present invention is to provide a generally improved device of the character described, so designed as to be applicable to bottles or similar containers of various sizes, or of various neck diameters.

A more specific object is to provide a combination device as stated which will be characterized by the disposition of the pump unit thereof directly within the stopper of the container, as distinguished from previous devices wherein the pump unit is located in the body portion of the bottle. By reason of the present arrangement, different stoppers may be selected, to be fitted onto a single pump unit, so that the pump unit and stopper assembly can be readily mounted in bottle necks of different diameters. In this way, the combination device constituting the present invention can be kept indefinitely, and positioned in any bottle that is conveniently accessible for the purpose of holding the liquid to be sprayed.

A further object is to provide a generally improved pump unit capable of assembly at low cost, while being fully efficient in the discharge of its intended functions.

Another object of importance is to provide a closure cap for the spray device so designed that the cap will fully seal the bottle against leakage or evaporation of the liquid, while simultaneously retaining the plunger of the spray unit in a depressed, fully inoperative position of adjustment.

A more specific object, in a modified form of the invention, is to include a stem or conduit depending from the pump unit within the container which is adapted under all circumstances to extend axially within the container fully to the bottom thereof, even though the bottle may be of a length greater or less than a bottle in which the unit was previously disposed. It is proposed, in this regard, that the conduit be self-adjusting in length, with its inlet end located in every instance at the bottom of the bottle, to insure the passage of liquid thereinto even though the bottle may be almost fully exhausted of its contents.

In another modified form of the invention, it is an important object, further, to eliminate the necessity for sealing gaskets or the like on the closure cap, by designing the cap in a manner such that when threaded onto the neck of a conventional bottle, a shoulder within the cap will sealably engage the nozzle of the device, to seal the pump unit against evaporation of liquid therethrough, with the cap at the same time depressing and rendering wholly inoperative the operating plunger of the spring unit.

For further comprehension of the invention, and of the objects and advantages thereof, reference will be had to the following description and accompanying drawings, and to the appended claim in which the various novel features of the invention are more particularly set forth.



In the accompanying drawings forming a material part of this disclosure:

Fig. 1 is a longitudinal sectional view through the container, closure cap, and spray device in which parts remain in elevation, the closure cap being in its sealing position.

Fig. 2 is an enlarged longitudinal section substantially on line 2—2 of Fig. 1, the plunger and piston unit being shown in dotted and full lines in depressed and extended positions, respectively, the closure cap being removed.

Fig. 3 is a transverse section on the same scale as Fig. 2, substantially on line 3—3 of Fig. 2.

Fig. 4 is an exploded perspective view of a portion of the plunger assembly.

Fig. 5 is a longitudinal sectional view showing the spray device mounted in a bottle of a size different from that shown in Fig. 1, the pump and conduit assembly remaining in elevation, the stem being of a modified construction.

Fig. 6 is an enlarged longitudinal sectional view through the upper portion of another modified construction, in which portions remain in elevation and portions are shown broken away.

Referring to the drawings in detail, in Fig. 1 there has been shown a bottle 10 which may contain various liquids to be sprayed, such as window cleaners, insecticides, etc. The bottle has a neck 12 externally threaded to receive the closure cap of the invention.

The spray device, generally designated 14, includes a plunger or piston generally designated 16 axially shiftable in a hollow cylinder 18 having a reduced lower end receiving and fixedly secured to a tubular stem 20 extending within the bottle. The stem is closed at the top but is provided with a restricted passage 21 communicating with the interior of cylinder 18. The end of the stem is dished around passage 21.

In Fig. 5, the spray unit 14 is identical to the first form of the invention, but the stem construction is modified, and automatically extends or retracts according to the size of the bottle. Thus a bottle $10^a$, smaller than bottle 10, is shown. In the modified form, a compression coil spring 26 is circumposed about a stem $20^a$. This bears at its lower end against the upper end flange of a tubular extension 24. At its upper end, spring 26 abuts against the lower end 28 of cylinder 18. Extension 24 is thus continuously biased in a direction to extend the same to its maximum extent beyond stem $20^a$, into engagement with the bottom of container $10^a$. The lower end of extension 24 is formed open, and has inlet ports 30 angularly spaced uniformly about its circumference.

It becomes apparent, therefore, that the device when formed as in Fig. 5 may be inserted in bottles of different lengths and efficiently used in each instance. In a long bottle such as shown in Fig. 1, spring 26 causes extension 24 to project beyond stem 20 a substantial distance, so that the conduit defined by the stem and extension will adjust itself to the overall length of the bottle with the inlet ports still being disposed directly at the bottom of the bottle, to insure the inflow of liquid into the device even though the contents of the bottle have been almost fully exhausted. If the device were mounted in a short container such as shown at $10^a$ in Fig. 5, the extension 24 would be shifted in the direction of the cylinder 18 against the restraint of spring 26 to telescope the stem 20 within extension 24 to a substantially greater extent, thus reducing the overall length of the conduit extending from the bottom of the bottle to cylinder 18.

The self-adjusting conduit, while being held against the bottom of the bottle despite the fact that the bottle may be shorter or longer than one previously used, has

the desirable feature of remaining at all times in a position extending axially of the bottle, with the ports fully open. This is distinguished from an arrangement, for example, in which a flexible hose might be inserted into the bottle, coiling irregularly therein in an arrangement in which the inlet end of the hose might tend to be forced away from the bottom of the container or might become wholly or partially closed by movement into a position directly against the bottom or side wall of the container.

Referring now to Fig. 2, a stopper 32 of cork or other resilient, sealing material has an axial bore 34 in which the cylinder 18 is snugly but removably engaged. Thus, the stopper can be slipped off the cylinder, to be replaced by a different stopper of a diameter and/or exterior shape different from that shown in the drawing, for the purpose of fitting the device into bottle necks of different diameters.

In any event, the stopper used is tightly fitted upon the cylinder, and has a longitudinal passage 36 extending from end to end of the stopper and open at both its ends, said passage being in communication with bore 34 and defining an air vent when the spray unit is being used, to maintain atmospheric pressure on the surface of the bottle contents, thereby to assure a proper pumping action. Cylinder 18 has a collar 33 rigidly connected to it and sealing the passage at other times, responsive to a slight adjustment of the cylinder downwardly in stopper 32.

The plunger 16 includes a hollow, enlarged head 38 having a laterally opening annulus 39 in which is fixedly engaged a nozzle 40 formed with a restricted outlet 41. Integrally formed on the upper end of the head is an arcuately depressed thumb rest 42, the ends of which project laterally outwardly from the head in opposite directions.

At its lower end, head 38 has a reduced portion or neck 43 fixedly engaged in the outer end of a plunger tube 44 formed at its lower or inner end with an enlargement 45 having a rounded bottom surface seating in and adhesively or otherwise fixedly engaged in a complementary depression 47 of a rubber insert 46 having a leak-proof wiping contact with the wall of cylinder 18. Insert 46 has a reduced axial extension 48 fixedly engaged in a tubular member 50 in cylinder 18. Extension 48 has an end wall formed with an opening 52.

Extending into member 50 and bearing against the perforated end wall of insert 46 is a compression coil spring 54, the other end of which has a large convolution seating on a frusto-conical shoulder 56 provided at the lower end of cylinder 18. The spring is formed with a light convolution 55 below the large convolution, at its extreme end pressing lightly against a ball check valve 51 seated in the dished portion on the upper end surface of the stem 20. The spring normally biases the plunger 16 to its extended, full line position of Fig. 2.

When the container and spring device are not in use during the actual spraying of liquid, a plastic closure cap 66 of inverted cup shape is applied to neck 12. Cap 66 is internally threaded at its lower open end, to receive the threaded neck of the bottle, and within the cap, adjacent the threads thereof, there is formed an inwardly directed, circumferential shoulder 68 to the underside of which is cemented an annular, compressible, sealing gasket 70.

The cap is so proportioned that when applied over the rest 42 in the manner shown in Fig. 1, and threaded onto neck 12, it will fully depress the plunger to its dotted line position of Fig. 2. When the plunger rest is fully depressed to tightly engage the upper end of the head, the sealing gasket 70 will at the same time be fully compressed against the neck 12 to insure positively against any leakage of liquid that might otherwise tend to develop. Evaporation of liquid is also insured against, should such evaporation tend to occur through nozzle 40.

In use of the device, cap 66 is removed. Spring 54 is now free to expand, and raises the plunger to its full line position of Fig. 2, with the user holding the bottle in his hand while maintaining pressure on rest 42 with the thumb of the hand. The cylinder 18 is manually pulled upwardly a short distance through stopper 32 to unseat collar 33.

Then, the liquid is sprayed merely by alternately depressing the rest 42 and then permitting it to move outwardly under the pressure of the spring 54. Each depression of the rest moves the plunger or piston through its pressure stroke to the dotted position shown in Fig. 2, so that the piston reduces the size of the chamber defined between the lower end of insert 46 and the stem.

When pressure on rest 42 is released and spring 54 is permitted to expand, raising the piston, the piston moves through its suction stroke to its full line position of Fig. 2. This develops suction in cylinder 18 lifting ball valve 51 off its seat, causing liquid to be drawn upwardly through the stem 20 into the cylinder 18. On the next pressure stroke of the piston the liquid, seeking an outlet, is forced through the opening 52 and emerges in a spray through nozzle 40.

In the modified construction shown in Fig. 6, the inner construction of the spray or pump unit $14^b$ is identical to that of the first form, and the stopper 32 is also utilized. Further, stem $20^a$, spring 26, and conduit extension 24 of Fig. 5 may be employed. Alternatively, the stem 20 of Fig. 1 may be used.

In this form of the invention, the only differences are in the plunger head, nozzle, thumb rest, and cap construction. The head $38^b$ is shaped substantially similarly to the first form, except for having a continuously extending, external collar 72, the top surface of which has a transverse convexity 74. Opening through the convex surface is a discharge passage $41^b$, so that the shoulder or collar 72 defines a nozzle with a single opening, functioning similarly to nozzle 40.

Thumb rest $42^b$ in this form of the invention differs from the first form in that it does not project outwardly beyond the sides of the head $38^b$. Instead, it is of a diameter equal to that of the head, and is formed with a depression in its top surface to receive one's thumb.

The closure cap $66^b$ is internally threaded at its lower end to engage neck 12, and intermediate its ends, the cap has an enlargement with an internal shoulder $68^b$, said enlargement being formed with a transversely concave, downwardly flaring inner side surface 78 complementing the convexity 74 of collar 72. As a result, when cap $66^b$ is threaded onto neck 12, it depresses rest $42^b$ and hence the entire plunger $14^b$, similarly to the first form. At the time the rest is fully depressed, the enlargement comes to bear tightly against the collar 72, sealing the discharge passage. This eliminates the need for special gaskets, etc., due to the fact that the previous manual closing of the passage 36 of the stopper 32 prevents leakage between the wall of the stopper and the inner surface of neck 12, while closeure cap $66^b$ prevents evaporation or leakage through the spray device.

While I have illustrated and described the preferred embodiments of my invention, it is to be understood that I do not limit myself to the precise constructions herein disclosed and that various changes and modifications may be made within the scope of the invention as defined in the appended claim.

Having thus described my invention, what I claim as new, and desire to secure by United States Letters Patent is:

A combined closure cap, container, and sprayer comprising a container for liquid including a neck, a closure cap removably fitted about said neck, a stopper engageable in the neck, said stopper having an axial bore and a spray device including a hollow cylinder engaged in and adjustable in the axial bore of said stopper, a tubular stem extending from the cylinder into the container, and

a tubular plunger working in the cylinder, a ball check valve on the stem openable on the suction stroke of the plunger and closable on the pressure stroke thereof to force liquid from the cylinder into the plunger, the plunger further including a discharge nozzle providing an outlet for said liquid and a thumb rest, the cylinder including a collar adapted to bear against one end of the stopper to limit movement of the cylinder axially of the stopper in one direction when the cap is in operative position, the stopper having a longitudinal passage constituting an air vent below the collar for communicating the interior of the container with atmosphere, said collar when engaged against the stopper closing the vent, said closure cap when in operative position on the neck bearing against the thumb rest to shift the plunger through its pressure stroke and maintain the same in the position to which it is so shifted, said cylinder upon downward adjustment carrying said collar against the stopper for sealing the air vent.

**References Cited** in the file of this patent

UNITED STATES PATENTS

| | | |
|---|---|---|
| 751,238 | Yost | Feb. 2, 1904 |
| 2,103,932 | Bernhardt | Dec. 28, 1937 |
| 2,119,884 | Lohse | June 7, 1938 |
| 2,281,604 | Smith | May 5, 1942 |
| 2,410,763 | Uhl | Nov. 5, 1946 |
| 2,586,687 | Mellon | Feb. 19, 1952 |
| 2,729,506 | Ziherl | Jan. 3, 1956 |

PLAINTIFF'S EXHIBIT Y

419

Jan. 20, 1948. F. M. TURNBULL ET AL 2,434,875

JETTING DEVICE

Filed Aug. 11, 1945 2 Sheets-Sheet 1

Fig. 1.

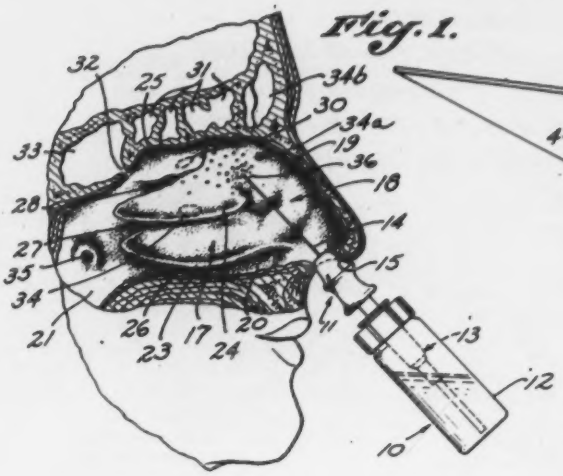


Fig. 2.

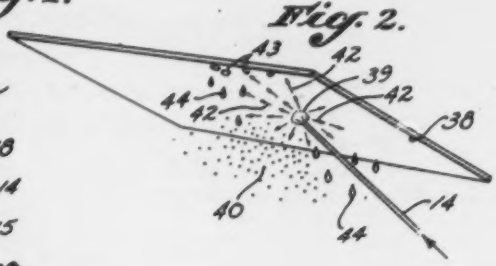


Fig. 5.

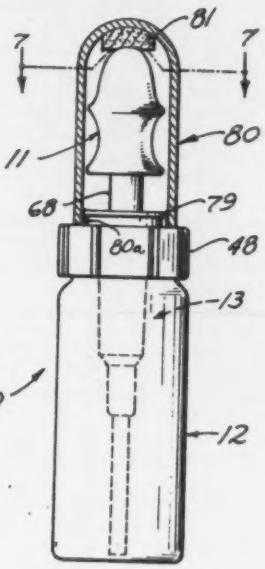


Fig. 3.

Fig. 4.

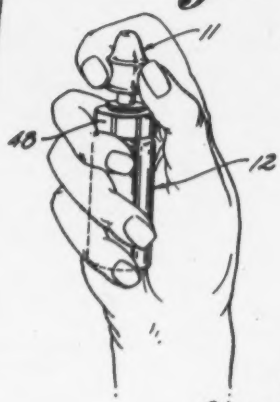


INVENTORS:
FREDERICK M. TURNBULL,
WILLIAM F. HAMILTON.
BY HARRIS, KIECH, FOSTER & HARRIS,

Laurence F. Kiech

FOR THE FIRM
ATTORNEYS.

420

Jan. 20, 1948. F. M. TURNBULL ET AL 2,434,875

JETTING DEVICE

Filed Aug. 11, 1945 2 Sheets-Sheet 2

Fig. 6.

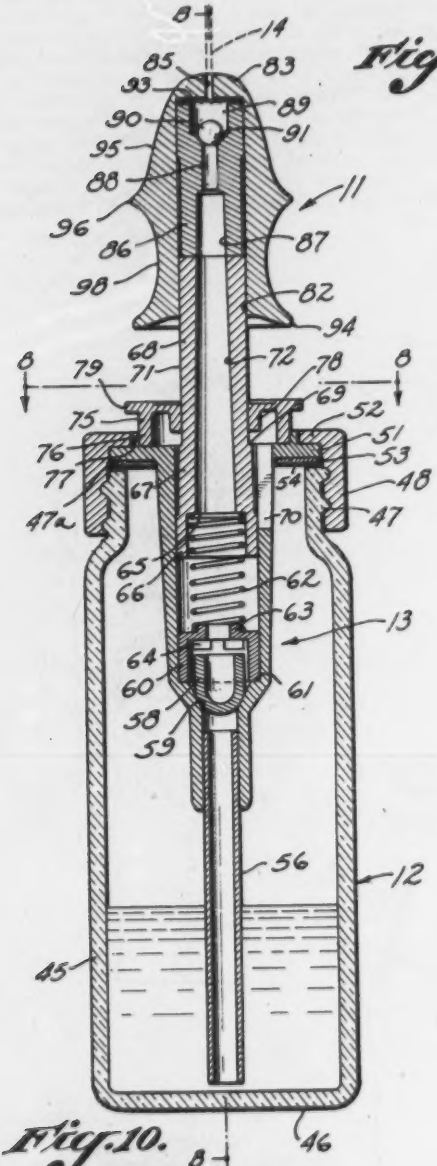


Fig. 7.

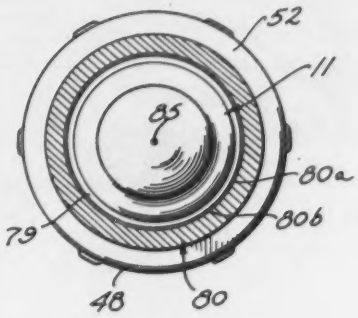


Fig. 8.

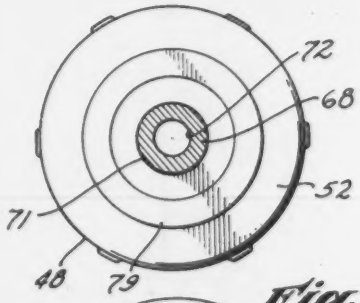


Fig. 9.

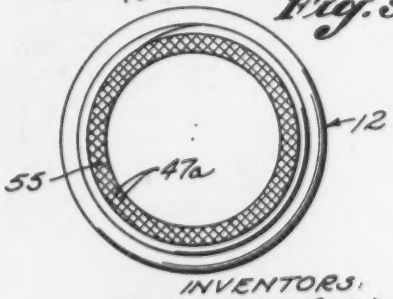


Fig. 10.

INVENTORS:
FREDERICK M. TURNBULL,
WILLIAM F. HAMILTON,
BY HARRIS, KIECH, FOSTER & HARRIS,

Clarence F. Kiech

FOR THE FIRM
ATTORNEYS.

Patented Jan. 20, 1948

4/21

2,434,875

# UNITED STATES PATENT OFFICE

2,434,875

## JETTING DEVICE

Frederick M. Turnbull, Los Angeles, and William F. Hamilton, Altadena, Calif.; said Hamilton assignor to said Turnbull

Application August 11, 1945, Serial No. 610,310

3 Claims. (Cl. 128—250)

1

Our invention relates to liquid jetting devices, particularly to a compact, highly directional device for projecting a needle-like jet of liquid in a direction axially of the device. The invention will be described particularly with reference to its use as a nasal medicator for introducing metered quantities of a liquid medicament into the upper part of the nasal cavity to relieve the congestion of the nasal membranes caused by infections, allergy, hay-fever, etc.; mechanical irritations or physical discomforts arising from dust, sudden change in altitude, etc.; or chemical irritations caused by fumes, etc.

It is an object of the present invention to provide a device having several or all of the following features, to wit, a device which is (1) highly directional and self-directional to direct the medicament automatically to a position high in the nose to reach the seat of the usual nasal infections; (2) readily portable in the sense that it is small and can be easily carried in a pocket or handbag to be available for inconspicuous nasal treatment when needed; (3) precise and capable of delivering a measured dosage of medicaments such as the sulfas, penicillin, vasoconstrictors, or other drugs which should be used in limited doses; (4) sanitary in the sense that the applicator and the medicament can be kept free from contamination; (5) leak-proof to the extent that the device can be carried in any position without danger of leakage, this being true to a large extent even during substantial changes in atmospheric pressure, as during airplane flights; (6) substantially unbreakable, all of the exposed portions of the device being preferably made of plastics; and (7) substantially non-clogging. The importance of these features and their absence from medication devices heretofore known will be apparent from inspection of conventional medicine droppers and atomizers.

To aid in the relieving of infections, often resulting in nasal congestions as in the common nose cold, it is essential to best results that the medicament reach and wet the nasal membranes high in the nose, to wit, in the upper sinus areas, these membranes being at positions disposed substantial distances from the nostril and reached through narrow channels difficult of access by ordinary methods.

The present invention contemplates nasal medication by jetting a measured amount of medicament in a small and usually needle-like stream into the nasal passage to impinge upon the upper interior surfaces. The velocity of impingement is such that the stream breaks up to form a mist-like spray portion comprising a myriad of small droplets of large surface-to-volume ratio which drift from, or are propelled away from, the surface of impingement, migrating through the existing atmosphere to deposit upon and wet other

2

portions of the nasal passage. Thus, the liquid medicament reaches the impingement surface as a jet but then sprays and trickles over the walls of the turbinates into the meati to reach the ostia and the orifice of the Eustachian tube. If the medicament has a vasoconstrictive action, the nasal passage is quickly cleared or decongested.

It is an object of the invention to provide a novel device for nasal medication which jets a small and usually needle-like stream of medicament into the nasal passage and which device is substantially self-directional in the sense that its use, even in non-professional hands, will automatically direct the stream of medicament toward the upper sinus areas.

It is another object of the invention to provide a novel applicator or head shaped to engage the anterior naris or nostril and shaped to limit insertion of the head into the nostril to avoid injury to the nasal tissues.

A further object of the invention is to associate such a head with a pumping mechanism and a liquid container in such way that relative movement between the head toward the container will actuate the pumping mechanism and produce the stream.

Still a further object of the invention is to provide a device with such a head and which is operable to project the stream into the nostril, either by bodily movement of the container toward the nostril while the head fits therein or by finger-induced relative movement between the head and the bottle.

A further object of the invention is to provide a device which is sanitary, in that the head can be easily cleaned, and which prevents contamination of the medicament.

It should be understood, however, that the invention is not limited exclusively to the art of nasal medication. It finds wide usage by doctors, technicians, or artisans in the projection of a minute needle-like liquid jet for general uses and also to remote or difficultly-accessible positions.

In general, it is an object of the invention to provide a liquid jetting device in which the axis of the jet is along the longitudinal axis of the device, whereby this longitudinal axis indicates or predetermines the direction of the jetted stream. The longitudinal axis of the device thus serves as an orienting axis, in contradistinction to those devices in which the direction of a stream or spray cannot be accurately predetermined.

It is an object of the invention to provide a device including pump elements relatively movable in the direction of the desired jet, and to provide a device in which the pump elements are respectively connected to a container and a head, relative movement between the head and container projecting liquid through an orifice of the head

in alignment with the direction of relative movement. Other objects lie in a novel construction of such a head and a novel association thereof with one of the pump elements.

It is also an object of the invention to provide a compact jetting device which can be operated by one hand.

Further objects and advantages will be apparent to those skilled in the art from the following description of an exemplary embodiment particularly applicable to nasal medication.

Referring to the drawings:

Fig. 1 is a vertical sectional view of the left nostril, taken just beyond the septum, showing diagrammatically some of the more important anatomical features of the nasal passage and showing the self-directional jetting device of the invention in operative position;

Fig. 2 is a diagrammatic view illustrating the action taking place when a needle-like jet strikes an inclined surface, and suggesting the mist-like dispersion as well as the paths of liquid flow along the surface;

Fig. 3 is a perspective view showing the preferred one-hand operation of the device;

Fig. 4 is a perspective view showing an alternative method of operating the device;

Fig. 5 is a side view of the device with its protective cover attached, this cover being shown in section;

Fig. 6 is an enlarged vertical sectional view of the device showing the pump elements in the position occupied near the start of the jet-producing action;

Fig. 7 is a cross sectional view, taken as indicated by the line 7—7 of Fig. 5;

Fig. 8 is a cross sectional view, taken along the line 8—8 of Fig. 6;

Fig. 9 is a top view of the container with the pump elements removed; and

Fig. 10 is an enlarged vertical sectional view of an alternative valve construction.

Referring particularly to Fig. 1, the jetting device of the invention is indicated generally by the numeral 10. It provides an applicator or head 11 of a form to be later described and which is movable axially of a bottle or container 12 to actuate a pump 13 in a manner to send a needle-like stream of medicament 14 into the nasal passage. The head 11 is adapted to contact the nostril or anterior naris 15, usually in a manner to seal the nasal passage against ingress or egress of air during the medicating operation.

In Fig. 1, the nasal passage is indicated generally by the numeral 17 and is bounded by the septum of the nose (not shown in Fig. 1), by the outer wall 18 of the nose, and by an upper wall 19 and a lower wall 20, the latter being formed by the hard and soft palates separating the nasal passage 17 from the mouth. The nasal passage 17 is shown as extending rearwardly to a passage 21 comprising the interior of the epipharynx.

Projecting into the nasal passage 17 are lower, middle, and upper turbinates 23, 24, and 25, respectively. The lower turbinate 23 is separated from the lower wall 20 by a space known as the lower meatus 26. The middle and upper turbinates are shown as overlapping slightly but provide therebetween a space opening on the nasal passage and known as the middle meatus 27. Similarly, a passage or space known as the upper meatus 28 opens on the main nasal passage and is positioned between the middle turbinate 24 and the upper turbinate 25. The meati 26, 27, and 28 are small, pocket-like spaces as distinct from broad, open-mouthed depressions or passages, particularly when the nose is congested, and resist entry of a medicament approaching same as an airborne spray, as previously pointed out. Medicinal decongestion requires that the medicament, typically a solution having bactericidal and/or bacteriostatic and also a vasoconstrictive action, must reach the congested zone and, by penetration or gradual decongestion, reach the upper surfaces of the nasal passage, e. g., the medicament must reach the seat of the infection. In this respect it is desirable that the medicament reach and wet the surfaces bounding the turbinates and the meati, particularly the middle and upper meati 27 and 28. It is also desirable that the medicament reach various ostia opening on the meati. For example, the ostia of the ethmoid sinuses, indicated by the numeral 30, lead from the posterior ethmoid cells 31 and open on the upper meatus 26. Also openings on this upper meatus 28 is the ostium 32 of the sphenoid sinus 33. Opening on the middle meatus 27 is the ostium 34 of the maxillary sinus, also the ostia of the anterior ethmoids, not shown in Fig. 1 to avoid confusion, and the ostium 34a of the frontal sinus 34b. To the rear of the meati, the orifice 35 of the Eustachian tube opens on the passage 21.

It is important to the use of the invention as a nasal medicator that the needle-like stream of medicament 14 be directed toward the upper internal surfaces of the nose. When used for this purpose, the present invention is self-directional in the sense that its use practically automatically directs the stream 14 in the desired direction. It is preferable that the stream 14 strike the wall of the nasal passage near the bases of the middle and upper turbinates 24 and 25, it being particularly advantageous if the stream 14 impinges on a surface near the base of the middle turbinate 24, e. g., in or near a zone indicated by the dotted circle 36 of Fig. 1. Preferably, the stream 14 does not substantially diverge or break up into individual droplets prior to impingement near the zone 36. However, upon such impingement, the stream usually breaks up into a mist-like spray portion and a liquid portion. The minute droplets of such a mist-like spray move to and wet the exposed upper surfaces of the nasal cavity. That portion of the medicament which is not broken up into the mist-like spray, and which is termed hereinafter as the liquid portion, flows along the nasal surfaces from the vicinity of the zone 36, either because of the initial velocity of the stream 14 or because of gravitational action. In either instance, the contact of the medicament with the nasal surfaces tends to spread the medicament along the surfaces due to its wetting action. The net result is that the medicament sprays, flows, and trickles into the middle and upper meati 27 and 28 and reaches the walls of the three turbinates 23, 24, and 25. If the medicament has a vasoconstrictive action, it shrinks the turbinates and the tissues surrounding the various ostia. The medicament is conducted into and along the ostia by capillary action and opens the sinuses for drainage and ventilation. A portion of the medicament also reaches the orifice 35 of the Eustachian tube. The overall result is that the entire nasal passage and Eustachian tube are effectively cleared or decongested, and the ostia of the sinuses are open for ventilation and drainage of the sinuses themselves.

The action which takes place when the stream

14 impinges in or near the zone 38 is similar to that illustrated in Fig. 2, which shows the stream 14 directed at an acute angle toward a sloping surface 38, which may be considered as a surface of the nasal passage or a surface of some other body. When the still-integral stream 14 first impinges on the surface 38 in a zone indicated by dotted circle 39, a portion of the liquid breaks up into a mist-like spray. This spray can be observed against a dark background in an appropriate light. It is suggested in Fig. 2 by minute droplets 40 which are propelled from the zone 39 or which drift therefrom through the adjacent air. Another portion of the stream 14 appears not to be thus immediately subdivided and the forward velocity of the stream carries most of this liquid up the inclined surface 38 as a spreading film, although a smaller fraction of the liquid spreads sidewise and in a reverse direction to move film-wise from the zone 39. Such film-wise movement is suggested by arrows 42. As the film spreads, it becomes unstable and appears to break up in part to form surface-adhering droplets 43 which may drain gravitationally along the surface 38 or which may coalesce with other droplets to form larger masses which drop from the surface 38 in a rain-like manner, as suggested by drops 44, which fall freely to any surfaces therebeneath, e. g., to the surfaces, shown in Fig. 1, of the lower turbinate 23 along which such droplets move to enter and coat the walls of the lower meatus 26, or from which they drop to the lower wall 20.

Some such action takes place when the stream 14 impinges against a surface of the nasal passage, although the flows of liquid may be somewhat different than suggested in Fig. 2, depending upon the contour and slope of the impingement surface. However, irrespective of the particular action which takes place, it has been found clinically that this type of jetting action is unexpectedly beneficial in supplying medicament in wetting relationship with the upper internal surfaces of the nose to reach those areas of the nasal passage where the medicament is most needed and which often form the locus of any infection present. Best results arise from a stream 14 which does not substantially break up into droplets prior to impingement, namely, a stream which does not diverge substantially before impingement. However, some degree of divergence can be permitted, particularly if the velocity on impingement is sufficient to break up a portion of the medicament into a mist-like spray which penetrates the meati to reach the various ostia.

Previously, a needle-like stream 14 for nasal medication was neither commonly used nor, in fact, feasible. The present invention has been designed not only to produce the desired stream 14 but to make it self-directional in the sense that its use, even in non-professional hands, will automatically direct the stream toward the upper internal surfaces of the nose. This is accomplished by the particular design of the invention which, aided by its necessary mode of use in nasal medication, directs the stream substantially as suggested.

The details of the preferred embodiment of the invention are best shown in Figs. 5 to 8. Referring thereto and particularly to Fig. 6, the container 12 is preferably of the longitudinally-elongated type to provide a longitudinal axis, indicated generally by the dotted line B—B, and which aids in directionally predetermining the needle-like stream 14, as well as in making the device self-directional when employed as a nasal applicator. This container is usually formed of a suitable plastic, preferably of the transparent type, for example polystyrene, although any material non-reactive with the medicament can be employed. It is of relatively small size, preferably of a size and shape to be retentively encompassed in the palm of the hand. It provides a side wall 46 closed by a bottom wall 46 and preferably provides an externally-threaded neck 47 terminating in an upper annular edge 47a extending substantially radially outward. The neck 47 receives an internally-threaded retaining member or cap 48 formed of a thermoplastic or thermosetting plastic, metal, or other material. The threaded engagement between the neck 47 and the cap 48 is merely exemplary of one form of attachment means, it being clear that other expedients can be employed.

The details of the pump 13 are not, per se, a part of the present invention. Various forms of pumps can be employed, such, for example, as those shown in the patents to Andrew M. Martin, Nos. 2,362,080 and 2,362,081. Fig. 6 illustrates certain details of the pumping structure of the former patent as this type of pump has been found very satisfactory as the pressuring source of the present invention. Generally speaking, the preferred embodiment of the present invention contemplates the use of a pump having two pump elements relatively movable along the axis B—B, one of the pump elements being connected to the container 12 and the other being connected to the head 11, whereby relative movement between the head and the container propels a pump-metered quantity of medicament from the head 11.

The pump shown in Fig. 6 includes a cylindrical barrel 50 having a flange 51 extending outward beneath an inwardly-extending flange 52 of the cap 48. The flange 51 extends outward a substantial distance across the upper annular edge 47a of the neck 47 and a sealing washer 53 is preferably disposed therebetween so that tightening of the cap 48 compresses the washer 53 against the neck 47 and also centers the barrel 50 in the container 12.

In accordance with the present invention, the washer 53 is preferably foil-coated cork to provide a deformable surface 54, usually formed by the foil, engaging the upper annular edge 47a. A very desirable breathing action, tending to equalize the internal and external pressures of the container, is obtained by roughening, knurling, or grooving the entire surface of the upper annular edge 47a, as suggested by the numeral 55 in Fig. 8. If the container 12 is formed of a material softening when heated, a hot file or other toothed tool may be pressed against the annular edge 47a to obtain the roughening, or other expedients can be employed. This forms minute depressions in the annular edge 47a which are usually in some predetermined pattern but which cooperate with the deformable surface 54 in providing a plurality of minute passages of sufficient size to permit a slow leakage of air tending to equalize internal and external pressures, but of insufficient size to permit gravitational flow of the liquid upon upturning the container or placing it on its side. If the surface 54 is not deformable or if the washer 53 is eliminated to permit the flange 51 to engage the roughened annular edge 47a, the engaging surface will merely bridge across the minute depressions without substantial deformation, and the depth thereof will determine the minimum size

of the minute passages. However, if the surface 54 is deformable, tightening of the cap 48 will force the crests of the roughened annular edge 47a slightly into the deformable surface 54 so that the size of the minute passages is reduced as the cap is tightened. With the usual manual tightening of the cap 48 to press the foil-coated washer 53 against the roughened annular edge 47a, minute depressions of a depth between about .025–.05 mm., or slightly more, will be found satisfactory with a liquid of about 40 centipoises. With other liquids, deeper or more shallow depressions will be desirable, depending on the physical properties of the liquid. When using a deformable surface 54, grooves of undue depth can be formed in the annular edge 47a and tightening of the cap 48 will decrease this depth to the desired amount by deforming the surface 54 to extend a distance into the grooves to decrease the size of the remaining passages. In practice, the cap 48 is tightened until there is no gravitational leakage of the liquid when the container is upturned or on its side, the size of the minute passages being then such as to admit a slow flow of air tending to equalize the internal and external pressures.

The lower end of the barrel 50 provides a reduced-diameter portion which receives the upper end of an intake tube 56 opening just above the bottom wall 46 of the container, the upper end of the tube 56 being suitably adhered to the reduced-diameter portion.

Near the lower end of the barrel 50 is an intake valve, shown as including a hollow valve member 58 having a hemispherical lower end adapted to seal against a conical valve seat 59 provided by the barrel 50 to resist movement of liquid from the interior of the barrel 50 through the intake tube 56 but to permit free reverse movement. The valve member 58 moves vertically in a cage 60 held in engagement with a shoulder 61 of the barrel 50 by a spring 62. The lower end of this spring surrounds an upstanding flange 63 of the cage which centers the spring. The interior of the cage 60 is of sufficient height to permit a small vertical movement of the valve member 58. When liquid is flowing upward in the intake tube 56 into the barrel 50, the valve member 58 rises into engagement with a plurality of stops 64 spaced to provide passage means accommodating the upward flow.

The barrel 50 and its associated structure thus far described may be considered as comprising one of the pump elements of the invention, removably connected to the container 12 by the cap 48. The other pump element is movable relative thereto along the axis B—B and includes, in general, a hollow plunger 65 comprising a piston portion 66, a tapered portion 67, and a liquid-conducting, pump-actuating member 68 there being an annular shoulder 69 at the junction of the tapered portion 67 and the actuating member 68. The piston portion 66 provides a shouldered recess receiving the upper end of the spring 62, whereby this spring not only holds the cage 60 in position but also resiliently urges the hollow plunger 65 upwardly. The piston portion 66 is only slightly smaller than the interior of the barrel 50 to minimize leakage of pumped liquid therebetween. In normal use, this leakage is very small but, if present, is returned to the liquid in the container 12 through a slot 70 formed longitudinally in the upper end of the barrel 50 and traversing the flange 51. This slot also maintains the pressure on the upper portion of the piston portion 66 equal to the pressure on the liquid in the container 12 and produces other desirable results, such as set forth in the aforesaid patents.

The actuating member 68 provides a cylindrical exterior surface 71 and a liquid-conducting passage 72, both coaxial with the axis B—B. The pump-actuating member 68 is movable relative to the container along this axis and, during such movement, is additionally guided by a retaining member 75 which, in the present invention, serves several purposes. This retaining member 75 provides a skirt 76 telescoping within and suitably adhered to an upstanding collar 77 of the flange 51. This collar 77 has an external diameter slightly smaller than the internal diameter of the flange 52 of the cap 48 and serves to journal the cap and to centralize the barrel 50 with respect to this cap. The retaining member 75 also has a depending flange 78 which closely surrounds and slidably journals the exterior surface 71 of the pump-actuating member 68. This depending flange serves several functions. In the first place, it serves as a wiper for the exterior surface 71 as the actuating member 68 moves upward. In the second place, it surrounds this exterior surface sufficiently closely to provide a relatively good sealing action preventing a gravity flow of liquid from the container 12, even though the device is upturned or if the axis B—B is horizontal. In this connection, it should be understood that auxiliary sealing means can be provided at this point, if desired, but this is usually not necessary and, if used, should still, during operation of the device, permit passage of a small amount of air necessary to compensate for liquid displaced from the container 12. In the embodiment shown, such displacement air enters the container through the junction of the depending flange 78 and the pump-actuating member 68 during relative movement therebetween but without permitting substantial or objectionable leakage of liquid. In the third place, the lower end of this depending flange serves as a stop engaged by the annular shoulder 69 to limit the extended position of the hollow plunger 65 under the action of the spring 62.

In addition, the retaining member 75 provides an outwardly-extending flange 79 serving a dual purpose. Thus, this flange 79 is of a diameter slightly larger than the internal diameter of the flange 52 of the cap 48 so as to prevent detachment of the cap 48 from association with the pump elements when the entire pumping structure is removed from the container 12. Also, in accordance with the present invention, this flange 79 forms a support for a tubular, closed-ended and preferably domed cover 80 (see Figs. 5 and 7), preferably having a cylindrical side wall of such internal diameter as to be slid over the flange 79 and to be held in place by friction against accidental removal. The cover 80 protects the head 11 from contamination or accidental movement when the invention is carried in the pocket or handbag. In the preferred construction, the lower portion of the cylindrical side wall provides at least three minute inwardly-extending projections 80a which engage the flange 79, leaving narrow intervening annular spaces 80b permitting passage of air to equalize the pressures inside the cover 80 and surrounding the container 12 but of such narrow dimension as to prevent passage of the liquid except under pressure. Thus, any accidental leakage between the retaining member 75 and the pump-actuating member 68 is retained in the cover 80.

If desired, a small cushion member 81 of sponge rubber or other soft material may be adhered in the upper interior of the domed cover 80 to engage the head 11 in orifice-sealing relationship. This member 81 may adsorb or take up medicament from the orifice which it seals or it may be otherwise wetted with the medicament from time to time. In either event it not only prevents any drying of the medicament in the orifice but also sterilizes the surface of the head 11 which it engages if the medicament has an antiseptic action.

The head 11 forms an important part of the present invention and is constructed as best shown in Figs. 5, 6, and 7. In general, it provides a body, externally contoured as later described, and having a central opening 82 within which the upper end of the pump-actuating member 68 is suitably adhered. Extending across the upper end of the opening 82 is an end wall 83 formed integrally with the remainder of the head 11 and providing a discharge orifice 85 axially aligned with the axis B—B. The function of the pump 13 is to deliver to the inner or entrance end of this discharge orifice 85 a pressured stream of the medicament or other liquid which is to be jetted from the device. The function of the orifice 85 is to form this liquid into a needle-like stream 14. In practice, the orifice 85 can be shaped to produce the particular stream desired. The preferred orifice for the invention, when used as a nasal medicator or for other purposes, is a minute cylindrical-walled orifice having a diameter between about .008" and .012", preferably .010", this diameter determining the diameter of the needle-like stream 14 immediately upon expulsion. In the preferred practice, the axial length of the orifice 85 is at least twice the diameter and preferably from two to ten times this diameter, a very satisfactory length for a nasal medicator being about $\frac{1}{32}$", or slightly more. The orifice 85 is usually formed during the molding operation and its size is such that no medicament will flow gravitationally therethrough if the device is upturned.

In the preferred construction, a tubular element 86 is disposed in the central opening 82 between the end of the pump-actuating member 68 and the end wall 83, and serves numerous functions. The lower end of this tubular element 86 provides a passage 87 axially aligned with, and forming a continuation of, the liquid-conducting passage 72. Toward its upper end, this passage is constricted, as indicated at 88, and opens into a valve chamber 89 in which is disposed a valve element 90 adapted, when in its lower position, to engage in sealing relationship a conical valve seat 91 of the tubular element 86. The valve member 90 is shown as a small sphere, typically a small ball bearing sufficiently smaller in diameter than the valve chamber 89 to move freely therein, while permitting passage of the liquid in the zone between the valve member and the side wall of the chamber 89.

A small disc-like filter or strainer 93 is disposed in the extreme upper end of the central opening 82 just below, and preferably extending across the entrance portion of, the orifice 85. This strainer is preferably formed of metal screen, usually stainless steel screen of about 100 mesh, and has an outer diameter substantially corresponding to the diameter of the central opening 82. The upper end of the tubular element 86 bears annularly against the lower portion of this screen and aids in retaining it in place.

Such a screen-type filter serves many desirable functions in the device. In the first place, it strains the liquid discharging through the small orifice 85 and prevents clogging thereof by any particles which might have accidentally entered the liquid medicament. In the second place, it serves as a stop for the upward movement of the valve member 90. This value member engages the lower portion of the screen in a zone beneath the orifice 85 and such engagement tends to clean the screen in the central area which feeds the orifice. In the third place, the screen is of such small mesh that it remains wetted with the liquid medicament, thus tending to prevent any leakage of air into the device through the orifice and thus aiding the upper valve structure in preventing any loss of prime of the pump. When the cover 80 is in place, the cushion member 81 aids further in this connection.

The length of the tubular element 86 preferably determines the maximum stroke and, thus, the maximum discharge per stroke which, preferably, is less than the total dosage of medicament desired so that a predetermined number of actuations, usually three, is required to expel the prescribed dosage, thus preventing a part of the dosage from running from the nose, as might be the case if discharged in a single actuation. In this connection, the maximum inward movement of the pump-actuating member 68 and its attached piston portion 66 is preferably determined by engagement between a lower lip 94 of the head 11 and the upper surface of the retaining member 76. In assembling the device, the position of this lip 94 with respect to the pump-actuating member 68 is determined by the length of the tubular element 86. Shortening of this tubular element will produce a shorter stroke, with correspondingly decreased dosage, while lengthening of the tubular element will increase the stroke, with correspondingly increased dosage. In this way, selection of a tubular element 86 of appropriate length predetermines the maximum dosage of the device per stroke or actuation.

The external contour of the head 11 contributes importantly to various usages of the invention. The self-directional character of the invention, when used for nasal medication and its effectiveness for this purpose, is substantially aided by an appropriate design of the applicator end of the head 11. Preferably, the upper or applicator end of this head provides a rounded nostril-engageable surface 95 of a size to engage the nostril or the anterior naris. This shape of the surface 95 can be made to serve two desirable functions. In the first place, it insures substantial centering of the stream 14 with respect to the nostril. In the second place, it can deform the nostril into substantially circular contour and engage same in substantially air-sealing relationship to prevent any substantial ingress or egress of air during the medicating operation. This is desirable as preventing drafts or currents of air which might quickly displace the mist-like spray from its desired environment, either by drawing it into the throat or expelling it through the nostril.

At the base of the surface 95 is a rounded ledge 96 serving to prevent too deep a penetration of the head 11 into the nasal passage by engagement with the anterior naris or nostril.

The head 11 also provides finger-engageable means for actuation of the pump when the container is held in the hand and the head 11 is engaged by one or more fingers of this hand. Pref-

erably, the head provides finger-engageable means adapted to be engaged by two adjacent fingers or by the end of the thumb. The preferred construction provides finger-engageable depression means on opposite sides of the head to receive facing surfaces of two adjacent fingers of a hand while the container 12 is held exclusively by this hand. At the same time, it is desirable that the device should not require orientation about the axis B—B preparatory to being placed in operative position in the hand. For this purpose and other reasons, the preferred finger-engageable depression means comprises a shallow circular depression 98 extending completely around the head 11, preferably at a position between the rounded ledge 96 and the lower lip 94. The utility and advantages of such a finger-engageable depression 98 will be more fully apparent from the subsequent description of the mode of use of the invention.

Preferably, all of the elements of the device are made of a material non-reactive to the liquid medicament to be jetted, thus preventing any contamination thereof, either in the container 12 or during passage through the pump elements. In practice, we find it desirable to make as many of the elements as possible of thermoplastic or thermosetting resins. The head 11 and all of the elements of the pump 13, with the exception of the spring 62 and in some instances the valve element 90, can best be made of a polyvinyl chloride-polyvinyl acetate copolymer, e. g., a material known as Vinylite. Such a material is excellently suited to the apparatus and has long-wearing characteristics. The container 12 is preferably made of molded polystyrene and the domed cover 80 can desirably be molded methyl methacrylate, e. g., a material known as Plexiglas or Lucite, thus minimizing breakage during rough handling or upon droppage of the device.

In assembling the elements of the device, the pump elements are preferably first associated. The assembly can be accomplished, for example, in the following manner, it being clear that the words "adhered," "adhering," etc., have reference to any pressing, cementing, or other structurally-unifying operation tending to affix the parts in relatively permanent relationship. The valve member 58 and the cage 60 are dropped into the barrel, with the spring 62 in place, and the hollow plunger is lowered to compress the spring. The cap 48 is then positioned around the collar 77 and the retaining member 76 is then adhered within this collar. Preparatory to attaching the head 11, the strainer 97 is disposed in the central opening 82 and the tubular element 86 is then forced into this opening 82 with the valve element 90 in position. The upper end of this tubular element 86 preferably makes a press fit with the opening 82 and its lower end is somewhat relieved to provide for the reception of a suitable substance facilitating the adhering. The head 11 is then adhered to the upper end of the pump-actuating member 68. The washer 53 is then slipped around the barrel 50 and the intake tube 56 is then adhered to the barrel 50.

The container 12 is then filled to any desired level with the medicament, and the previously associated elements are then attached to the container in the relationship shown in Fig. 6 by tightening the cap 48. The head 11 is then moved toward the container 12 one or two times until the pump 13 is primed and the internal passages are completely filled with the medicament to and including the valve chamber 88, and preferably the orifice 85. The device is now ready for metered discharge of the medicament.

In using the device for nasal medication, the preferred orientation, aiding substantially in the self-directional character of the invention, is suggested in Fig. 3, showing operation by a right-handed person. Here, the index finger and the second finger of the right hand are pressed into the circular depression 98, the thumb engaging the bottom wall 46. The fingers engaging the depression 98 are then moved toward the thumb. This moves the head 11 toward the container 12, the reaction force being taken by the thumb. This is done after the surface 95 has been engaged with the nostril so that the head 11 extends a short distance into the nasal passage. This method of holding the jetting device of the invention, combined with the engagement between the head 11 and the nostril, insures delivery of the stream 14 to impinge on the upper internal surfaces of the nose. During such actuation of the device, a patient will automatically orient the axis B—B in the desired direction, any attempt to substantially displace this axis from its desired relationship with the nose representing an unnatural or uncomfortable method of actuating the device. When the device is oriented in the hand as suggested in Fig. 3, it is almost automatically "aimed" properly by the motions necessary to the actuation.

So, also, when the device is used for purposes other than nasal medication, its relationship with the human hand, suggested in Fig. 3, represents an accurate "aiming" as the thumb is aligned with the axis B—B and the first and second fingers are on opposite sides thereof—a natural "aiming" position. When the device is used in this manner for eye or throat irrigation, it is remarkably directive, even in hands unaccustomed to the device, in the sense that the device can be accurately "aimed" so that the direction of the stream 14 is predetermined.

Another method of holding the device, which is almost equally satisfactory and which is preferred particularly if the device is to be used for inconspicuous nasal medication in public places, is suggested in Fig. 4. Here, the device is held in the palm of the hand, with the container partially encircled by the second, third, and fourth fingers. The thumb and index finger press into opposite sides of the circular depression 98. Here again, when the device is brought into contact with the nostril, the axis B—B will naturally be disposed to direct the stream 14 to the desired surfaces of the nasal cavity. To expel the liquid, the thumb and first finger are moved toward the palm of the hand, the reaction force in this instance being taken either by the encircling fingers or by the bottom of the container, which rests in the palm of the hand. When used in the position shown in Fig. 4, the device can also be "aimed" with very substantial accuracy, thus facilitating employment of the device for purposes other than nasal medication.

Another similar method of using the device is to place only the end of the thumb in the circular depression 98 while the remaining fingers encircle the container. The thumb is moved toward the container to advance the head and actuate the pump.

The device can also be employed for nasal medication merely by grasping the container and forcing the container toward the head 11 while the surface 95 of this head is in contact with the

nostril. The rounded ledge 96 serves as a stop for preventing undue penetration of the head into the nasal cavity. In this instance, the reaction force is taken by the nose itself and, again, the device will automatically be used in such way as to jet the stream 14 in the correct and most advantageous direction.

It is sometimes desirable to use a spring-loaded valve member in the head 11. This can be accomplished by interposing a light compression spring between the valve member 98 and the strainer 93, or the alternative valve member shown in Fig. 10 can be used. As shown in Fig. 10, the conical valve seat 91 is engaged by a conical portion 100 of a valve member 101 molded of suitable plastic material and being hollow to lessen its weight. This valve member 101 provides a tongue 102 of smaller diameter than the constricted passage 88 and preferably tapered, as shown, to guide the to and fro movement of the valve member and retain its orientation relative to the seat 91. The upper end of the valve member provides an annular recess which receives and centers the lower end of a spring 105 compressed between the valve member 101 and the strainer 93. The spring tension should be just sufficient to hold the valve member against the seat 91 when the device is inverted, thus preventing any air flow into the pump when the device is operated in any position where gravity tends to unseat the valve, e. g., when the jet is angled downwardly from the horizontal. The requisite spring tension is very small and does not interfere with a lifting of the valve member by the liquid during actuation of the device.

The device herein described in detail, provided with an orifice of 0.01" in diameter, develops sufficient pressure to jet a stream which holds together for at least a foot or more and which then breaks up into small droplets which will carry to a surface six or eight feet away and impinge in a circular area having a diameter of only a few inches.

One feature of the device is that it may be carried without danger of leakage even when subjected to change in atmospheric pressure. With the construction hereinbefore described, a change in atmospheric pressure is transmitted to the interior of the cover 86 through the spaces 86b and to the interior of the container 12 through the minute passages between the washer 53 and the depressions of the upper annular edge 47a. Thus, if the structure is upright or in any position in which the liquid does not submerge the entrance portions of all of the aforesaid minute passages, e. g., if it is not in an upturned position, such breathing of air into and from the cover 86 and into and from the container 12 will prevent pressure differentials which might expel liquid through the pump. In the absence of such features, a reduction in atmospheric pressure, as by carrying the device to a higher altitude, may cause a column of liquid to rise in the pump and discharge from the orifice 85. Even then, however, such discharge is retained in the cover 86 and does not leak therefrom unless all of the spaces 86b are closed by the liquid and sufficient pressure differentials are developed to force the liquid therethrough. Even if the device is upturned so that the entrance portions of all of the minute passages hereinbefore mentioned are submerged, any such reduction in atmospheric pressure will cause discharge into the cover 86 of only that small amount of liquid in the pump. In such upturned position, the open end of the intake tube 56 communicates with the air in the container 12 and the pressure differential is relieved through the passages of the pump, the valve members 58 and 98 being then gravitationally displaced from their respective seats and the strainer 93 preventing the valve member 98 from closing the orifice 85.

Various changes and modifications can be made without departing from the spirit of the invention as defined in the appended claims.

We claim as our invention:

1. In a device for injecting a jet of liquid medicament into the nasal cavity, the combination of, an applicator head having a rounded end fitting the entrance to the nostril, said head also having an axially directed orifice centrally disposed in said end for directing a thin stream of said liquid medicament through said nostril into contact with the upper sinus areas, and a liquid measuring pump between a source of liquid medicament and said head for withdrawing liquid medicament from said source and forcing a measured volume thereof under pressure through said orifice.

2. In a device for injecting a jet of liquid medicament into the nasal cavity, the combination of, an applicator head having a rounded end fitting the entrance to the nostril, said head also having an axially directed orifice centrally disposed in said end for directing a thin stream of said liquid medicament through said nostril into contact with the upper sinus areas, a container for holding a body of said liquid medicament and having a longitudinal axis in substantial alignment with the axis of said head and orifice, a liquid supply tube in said container and a liquid measuring pump for withdrawing liquid medicament from said body through said supply tube and forcing a measured volume of said liquid medicament under pressure through said orifice.

3. In a device for injecting a jet of liquid medicament into the nasal cavity, the combination of, an elongated applicator head having a rounded end fitting the entrance to the nostril and having a peripheral groove spaced axially from said end and constituting finger engaging means, said head also having an axially directed orifice centrally disposed in said end for directing a thin stream of liquid medicament through said nostril into contact with the upper sinus areas, a supply tube for said liquid medicament, and a liquid measuring pump between said supply tube and said orifice for forcing a measured volume of said liquid medicament through said orifice upon relative movement of said head and supply tube toward each other.

FREDERICK M. TURNBULL.
WILLIAM F. HAMILTON.

REFERENCES CITED

The following references are of record in the file of this patent:

UNITED STATES PATENTS

| Number | Name | Date |
|---|---|---|
| 780,077 | Van Ness | Jan. 17, 1905 |
| 2,064,314 | Morin | Dec. 15, 1936 |
| 2,362,081 | Martin | Nov. 7, 1944 |

## Certificate of Correction

Patent No. 2,434,875. January 20, 1943.

FREDERICK M. TURNBULL ET AL.

It is hereby certified that error appears in the printed specification of the above numbered patent requiring correction as follows: Column 10, line 8, for "value" read *valve*; and that the said Letters Patent should be read with this correction therein that the same may conform to the record of the case in the Patent Office.

Signed and sealed this 20th day of April, A. D. 1948.

[SEAL]

THOMAS F. MURPHY,
*Assistant Commissioner of Patents.*

P's Ex. "DD" 429

# LEAKPROOF SPRAYER

## PRICES

| QUANTITY | PRICE PER THOUSAND |
|---|---|
| 1,000 | $84.00 per thousand |
| 5,000 | 81.00 per thousand |
| 10,000 | 79.00 per thousand |
| 25,000 | 77.00 per thousand |
| 50,000 | 76.00 per thousand |
| 100,000 and up | Annual Contract quoted on request |

## TERMS:

TERMS: 1% 10 Days — Net 30
F.O.B. Kansas City, Missouri
MINIMUM ORDER: 1,000 Sprayers to case
CASE WEIGHT: 34 lbs.

## COLORS:

ALL WHITE or WHITE plunger with RED, BLUE, GREEN or YELLOW head and collar. Be sure to specify color when ordering.

Special color combinations available in quantities of 100,000 or more. Prices quoted on request.

## CAPS:

Available in stock in following sizes and colors:

WHITE METAL—20, 22, 24, 26, 28, 33mm, 400 finish
BLUE METAL—26 & 28mm
YELLOW METAL—28mm
BLACK BAKELITE—24 & 28mm—$3.00/M extra
WHITE UREA—24 & 28mm—$6.00/M extra

Bakan can furnish metal or molded caps in any size or color in quantities of 100,000 or more. Prices quoted on request.

If customer furnishes molded caps, there will be a boring charge of $2.50/M.

## DIP TUBES:

Dip tubes will be cut to any desired length at no additional cost. When ordering specify over-all length from top of container to desired depth. Please submit sample bottle or container to insure accuracy.

NOTE: When ordering be sure to specify: Model Number, Cap size and color, Sprayer color, Dip Tube length, Plunger (standard or short).

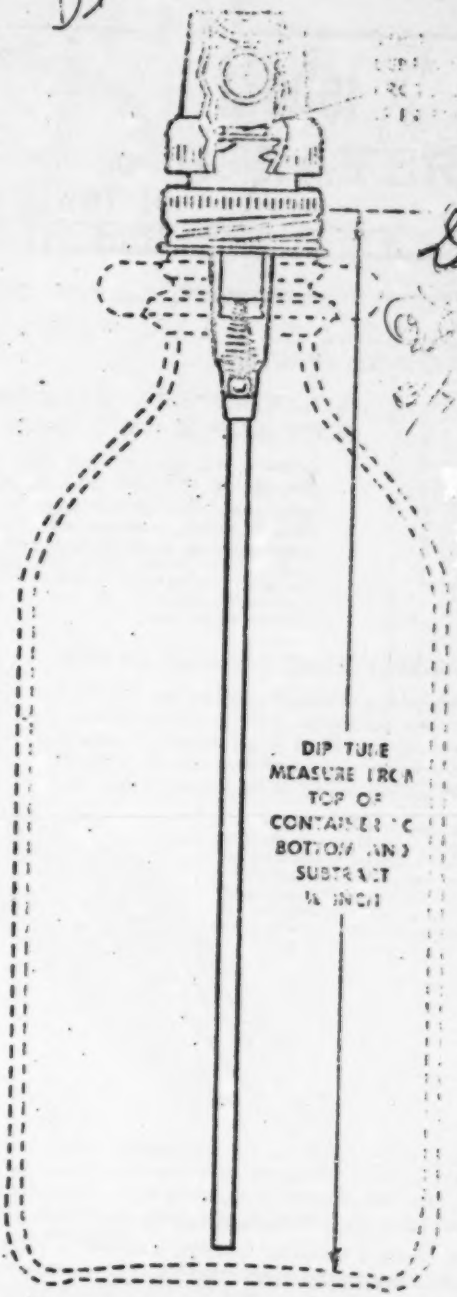


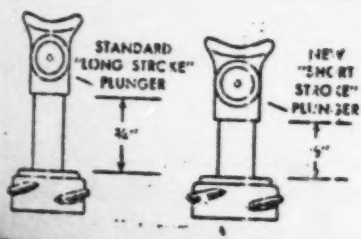


## NEW SHORT STROKE PLUNGER NOW AVAILABLE

Bakan sprayers may now be equipped with the new short stroke plunger which delivers less volume and is specifically designed for products such as window cleaners, spot removers, hair sprays, etc.

The standard, long stroke plunger is ideally suited for insecticides and other products where delivery of greater volume per stroke is desired.

When ordering specify short plunger if desired. Unless otherwise specified, sprayers will be equipped with standard, long stroke, plunger.

430

# BAKAN Sprayed and Dispensers

**DESIGNED FOR HIGH QUALITY, AT LOW COST! ADDS STYLE AND PERFORMANCE TO ANY PRODUCT**

INTRODUCING THE B A K A N MODEL 2 LEAKPROOF SPRAYER:

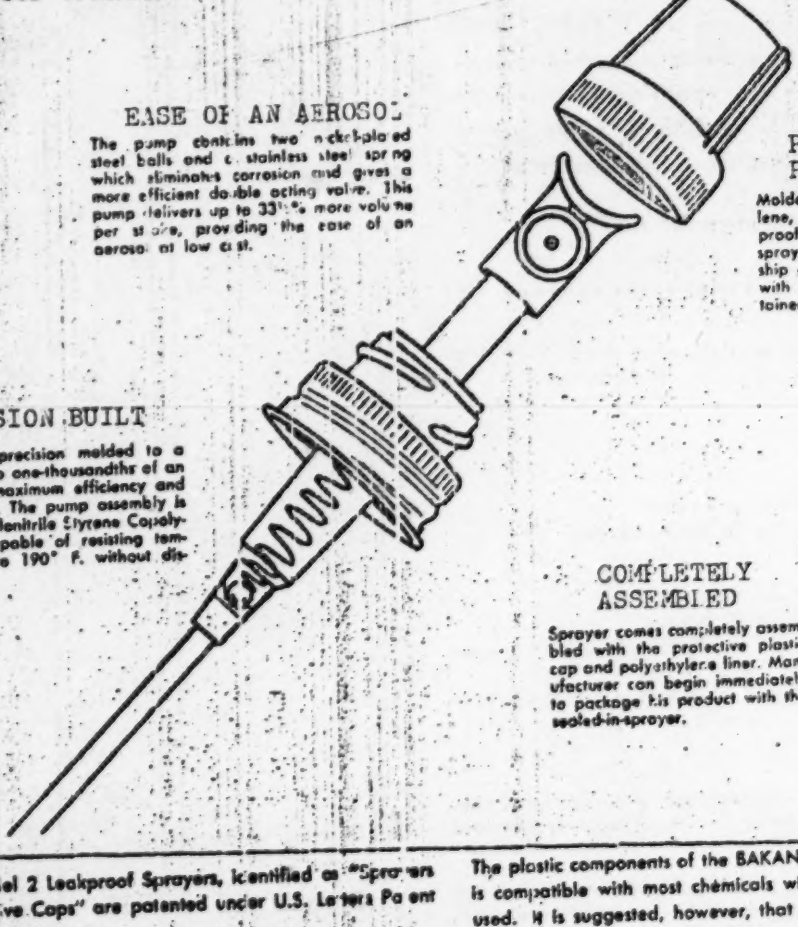

## EASE OF AN AEROSOL

The pump contains two nickel-plated steel balls and a stainless steel spring which eliminates corrosion and gives a more efficient double acting valve. This pump delivers up to 33⅓% more volume per stroke, providing the ease of an aerosol at low cost.

## PROTECTIVE PLASTIC CAP

Molded of high quality polyethylene, it provides a sealed, air-proof, protective cover for the sprayer. Enables manufacturer to ship and merchandise his product with a sprayer sealed in the container—ready to use.

## PRECISION BUILT

All parts are precision molded to a tolerance of two one-thousandths of an inch, insuring maximum efficiency and operating ease. The pump assembly is molded of Acrylonitrile Styrene Copolymer (TYRIL) capable of resisting temperatures up to 190° F. without distortion.

## COMPLETELY ASSEMBLED

Sprayer comes completely assembled with the protective plastic cap and polyethylene liner. Manufacturer can begin immediately to package his product with the sealed-in-sprayer.

**NOTE:** Model 2 Leakproof Sprayers, identified as "Sprayers with Protective Caps" are patented under U.S. Letters Patent No. 2,870,943

The plastic components of the BAKAN Model 2 Leakproof Sprayer is compatible with most chemicals where sprayers are commonly used. It is suggested, however, that each product be thoroughly tested with the sprayer to make sure they are compatible.

DISTRIBUTED BY:

BAKAN Plastics 2500 SUMMIT, KANSAS CITY 41, MISSOURI

PLAINTIFF'S EXHIBIT EE

431

# BAKAN
PLASTIC SPRAYERS & DISPENSERS

## Model 2 SPRAYER
with
PROTECTIVE COVER CAP

### EASE OF AEROSOL AT LOW COST

### COMPLETELY ASSEMBLED "IN THE BOTTLE" SPRAYER

Super polyethylene cover cap provides a sealed, leakproof protective cover for the sprayer. Enables manufacturer to ship and merchandise his product with a sprayer in the container. READY TO USE. Eliminates the problem of broken or lost sprayers on dealers' shelves.

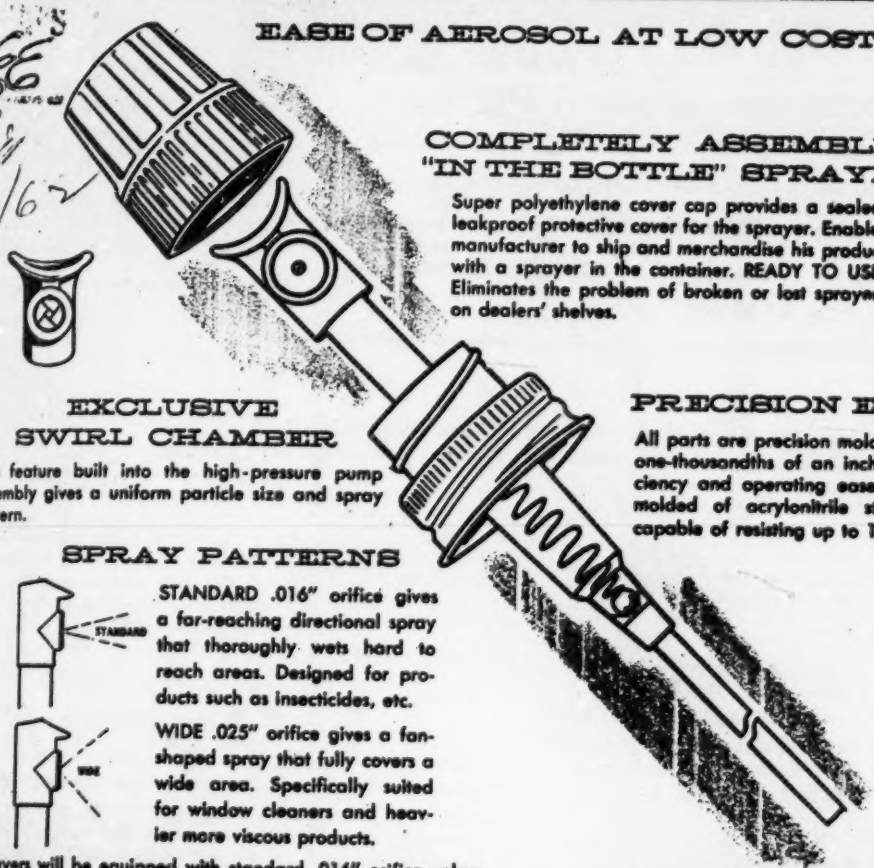

### EXCLUSIVE SWIRL CHAMBER

This feature built into the high-pressure pump assembly gives a uniform particle size and spray pattern.

### PRECISION ENGINEERED

All parts are precision molded to a tolerance of two one-thousandths of an inch, insuring maximum efficiency and operating ease. The pump assembly is molded of acrylonitrile styrene copolymer (Tyril) capable of resisting up to 190° F. without distortion.

### SPRAY PATTERNS




STANDARD .016" orifice gives a far-reaching directional spray that thoroughly wets hard to reach areas. Designed for products such as insecticides, etc.




WIDE .025" orifice gives a fan-shaped spray that fully covers a wide area. Specifically suited for window cleaners and heavier more viscous products.

Sprayers will be equipped with standard .016" orifice unless otherwise specified.

*NOTE:* Model 2 Sprayers, identified as "Sprayers with Protective Caps" are patented under U.S. Letters Patent No. 2,870,943.

The plastic components of the BAKAN Model 2 Sprayer are compatible with most chemicals where sprayers are commonly used. It is suggested, however, that each product be thoroughly tested with the sprayer to make sure they are compatible.

***distributed by:***

**BAKAN** PLASTICS
DIVISION OF COOK CHEMICAL COMPANY
P.O. BOX 78 ● 2500 SUMMIT ● KANSAS CITY 41, MISSOURI

432

# Model 2 BAKAN SPRAYER

## PRICES

| QUANTITY | PRICE PER THOUSAND |
|---|---|
| 1,000 | $88.00 per thousand |
| 5,000 | 81.00 per thousand |
| 10,000 | 79.00 per thousand |
| 25,000 | 77.00 per thousand |
| 50,000 | 76.00 per thousand |
| 100,000 and up | Annual Contract quoted on request |

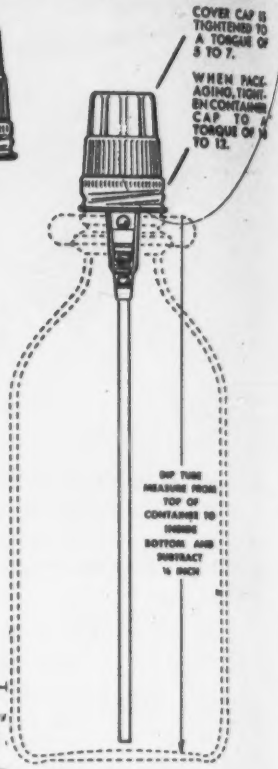


## TERMS

F.O.B. Kansas City, Missouri  CASE WEIGHT: 34 lbs.

MINIMUM ORDER: 1,000 Sprayers to case

## COLORS:

ALL WHITE or WHITE plunger with RED, BLUE, GREEN or YELLOW head and collar. Be sure to specify color when ordering. Special color combinations available in quantities of 100,000 or more. Prices quoted on request.

## CAPS:

Available in stock in following sizes and colors:

WHITE METAL—20, 22, 24, 26, 28, 33mm, 400 finish
BLUE METAL—26 & 28mm
YELLOW METAL—28mm
BLACK BAKELITE—24 & 28mm—$3.00/M extra
WHITE UREA—24 & 28mm—$6.00/M extra

BAKAN can furnish metal or molded caps in any color or size from 20mm to 38mm. Prices quoted on request. If customer furnishes caps, there will be a boring or punching charge of $2.50/M plus an additional $2.50/M for liner removal, if required.

## SPRAY PATTERNS . . .

STANDARD .016" orifice gives a far-reaching directional spray that thoroughly wets hard to reach areas. Designed for products such as insecticides, etc.

WIDE .025" orifice gives a fan-shaped spray that fully covers a wide area. Specifically suited for window cleaners and heavier more viscous products.

Sprayers will be equipped with standard .016" orifice unless otherwise specified.

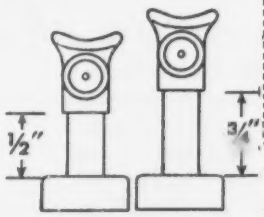


## PLUNGERS

Bakan sprayers may be equipped with the short stroke plunger which delivers less volume and is specifically designed for products such as window cleaners, spot removers, hair sprays, etc. The standard, long stroke plunger is ideally suited for insecticides and other products where delivery of greater volume per stroke is desired.

When ordering specify short plunger if desired. Unless otherwise specified, sprayers will be equipped with standard, long stroke, plunger.

## DIP TUBES

SEMI-RIGID STANDARD DIP TUBES will be cut to any desired length at no additional cost. FLEXIBLE DIP TUBES are available at an additional cost of $5.00/M.

When ordering specify over-all length from top of container to desired depth. Please submit sample bottle or container to insure accuracy.

NOTE: When ordering be sure to specify (1) Model Number, (2) Cap Size and Color, (3) Sprayer Color, (4) Dip Tube Length. And, if desired, (1) Short Stroke Plunger, (2) Wide Spray Orifice, (3) Flexible Dip Tube.

PLAINTIFF'S EXHIBIT FF

433

# BAKAN

PLASTIC SPRAYERS & DISPENSERS

DIVISION OF COOK CHEMICAL COMPANY • BOX 78 KANSAS CITY 1 MISSOURI

# MARK 100

# All New! TROMBONE JET SPRAYER

molded of DuPont chemically resistant **DELRIN®**

PLAINTIFF'S
Exhibit FF 3/8/62

**ADJUSTABLE NOZZLE**

The Mark 100 has an adjustable "screw-in-screw-out" nozzle. Works just like a garden hose nozzle. Sprays a 15 foot stream or a fine mist! Delivers 6 cc per stroke—six strokes per ounce!

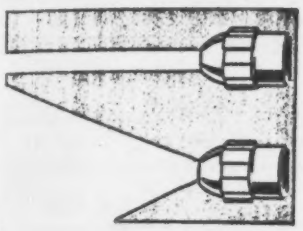

**PRECISION ENGINEERED**

Molded of DuPont's Delrin acetal resin, which offers you metal-like mechanical properties, high degree of strength, resilience and toughness. Chemically compatible.

**COLORS**

Available in deep sky blue. Special colors in quantities of 10,000 or more.

**SPECIAL METAL HANDLES***

We can furnish a specially designed snap-in handle for F style Half-Gallon or Gallon cans. Prices on request.

**PRICES FOR BASE SPRAYER**

| | |
|---|---|
| 200 | $ 75 ea. |
| 1,000 | .70 ea. |
| 5,000 | .65 ea. |
| 10,000 | .62½ ea. |

F.O.B. Kansas City, Missouri
Pack: Bulk
Minimum Order: 200

**CAPS**

The sprayer can be equipped with any size and style metal or molded cap. Bakan can furnish caps in most sizes from inventory (price list furnished or request). Caps must be punched or bored. Cost .0035 per unit.

**DIP TUBES**

Bakan stocks flexible Polyethylene dip tubes in three standard lengths only:

7" Included in base price
10" .0045 per unit
13" .0090 per unit

**VALVE BALLS**

Equipped with two nickel plated balls. For stainless steel add .008 per unit.

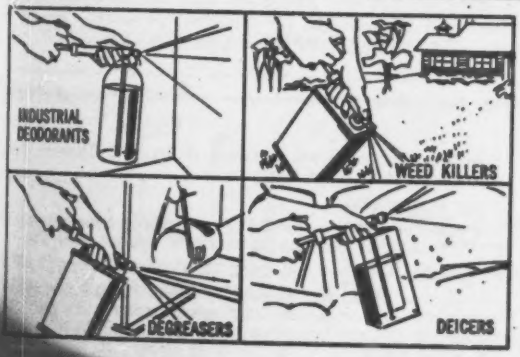


## 100 and One Uses...

The Mark 100 is designed to fit plastic, metal or glass, pint or quart containers. Particularly useful with an F style Half Gallon or Gallon can with special metal handle.

***The Mark 100 is perfect for spot spraying... white sidewall cleaners... industrial deodorants... rose sprays... liquid fertilizers... deicers... carpet cleaners... spot weed and crabgrass killers... fungicides and germicides... fireproofing liquids... engine degreasers... machine and equipment cleaners... tile, metal and floor cleaners.***

434

# BAKAN SPRAYERS

## MODEL 1

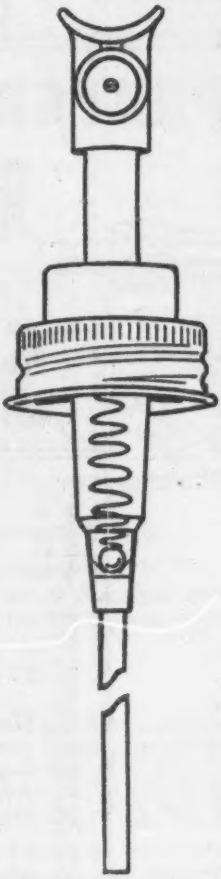

**EXCLUSIVE SWIRL CHAMBER**

This feature built into the high-pressure pump assembly develops up to 150 lbs. pressure at orifice which gives uniform particle size and spray pattern.

**SHORT AND LONG PLUNGER**

The short plunger delivers .6 cc per stroke and is specifically designed for window cleaners, starches, hair sprays, etc. The long stroke plunger delivers .9 cc per stroke and is recommended for residual insecticides. UNLESS otherwise specified Model 1 Sprayer will be equipped with short stroke plunger.

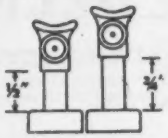


**COLORS**

All white or white plunger and orifice with red, blue, green or yellow head and collar available from stock.

**PRICES—** 525

**Base Sprayer Without Cap**

| | | |
|---|---|---|
| 1,000 | 78·00 | $74.00/M |
| 5,000 | 69·50 | 69.00/M |
| 10,000 | 66·50 | 66.00/M |
| 25,000 | 63·50 | 64.00/M |
| 50,000 | 62·50 | 63.00/M |
| 100,000 up | Annual contract quoted on request | |

F.O.B. Kansas City, Missouri
Pack: 1,000 Sprayers to case
Minimum Order: 1,000 Sprayers
Case Weight: 28 lbs.

**CAPS**

The Model 1 Sprayer can be equipped with any size cap, 20mm to 33mm, metal or molded. Bakan can furnish caps in most sizes from inventory (price list furnished on request).

Caps that are not available with the hole molded or punched in have to be punched or bored. Bakan is equipped to punch or bore caps at $3.50/M.

## MODEL 3

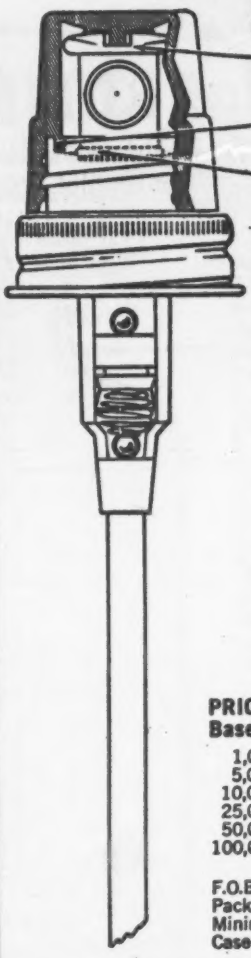

**EXCLUSIVE TRIPLE-SEAL FOR LEAK-PROOF PERFORMANCE**

1. Diaphragm is depressed by cap extension, sealing orifice.
2. Cover cap seals against rib of collar.
3. Bottom of head forms an "O" ring type seal.

**COMPLETELY ASSEMBLED "IN THE BOTTLE" SPRAYER**

Enables manufacturer to ship and merchandise his product with a sprayer in the container. Ready to use.

**COLORS**

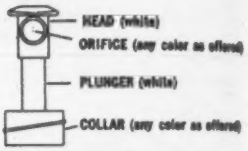


All white or white plunger and head with red, blue, green or yellow orifice and collar available from stock.
Note: Head is produced from natural polyethylene only.

**PRICES—**

**Base Sprayer Without Cap**

| | |
|---|---|
| 1,000 | $85.00/M |
| 5,000 | 78.00/M |
| 10,000 | 76.00/M |
| 25,000 | 74.00/M |
| 50,000 | 73.00/M |
| 100,000 Up | Annual contract quoted on request |

F.O.B. Kansas City, Missouri
Pack: 1,000 Sprayers to Case
Minimum Order: 1,000 Sprayers
Case Weight: 34 lbs.

**CAPS**

The Model 3 Sprayer can be equipped with any size cap, 24mm to 33mm, metal or molded. Bakan can furnish caps in most sizes from inventory (price list furnished on request).

Caps that are not available with the hole molded or punched in have to be punched or bored. Bakan is equipped to punch or bore caps at $3.50/M.

---

**LINER REMOVAL**
Caps can not be punched or bored with liners. Bakan will remove liners at $2.50/M.

**DIP TUBES—MODEL 1 OR 3**
Semi-rigid dip tubes will be cut any desired length, up to 9¾" at no additional cost. Flexible Dip Tubes are available at an additional cost of $5.00/M. Measure from top of container to inside bottom of bottle and subtract ⅛ inch.

**SPRING—MODEL 1 OR 3**
The sprayer is equipped with a stainless steel spring.

**VALVE BALLS**
The Model 1 or 3 Sprayer is equipped with nickel plated balls.

Stainless steel balls are available at $8.00/M Sprayers; Pyrex Glass Balls at $2.00/M Sprayers.

**HEAT RESISTANT**
The pump assembly is molded of acrylonitrile styrene copolymer (Tyril) capable of resisting up to 190°F. without distortion.

**COMPATIBILITY**
The plastic components of Bakan's Model 1 and 3 Sprayers are compatible with most chemicals where sprayers are commonly used. It is suggested, however, that thorough tests be made by the buyer and Bakan's laboratory to make sure the sprayer is compatible with the buyer's product.

435

# BAKAN MARK 30 1 OZ. DISPENSER

## At Last a 1 oz. or ½ oz.* per stroke dispenser

*The MARK 30 DISPENSER is precision molded of new durable tough plastic called Cycolac which will withstand temperatures up to 160° F.*

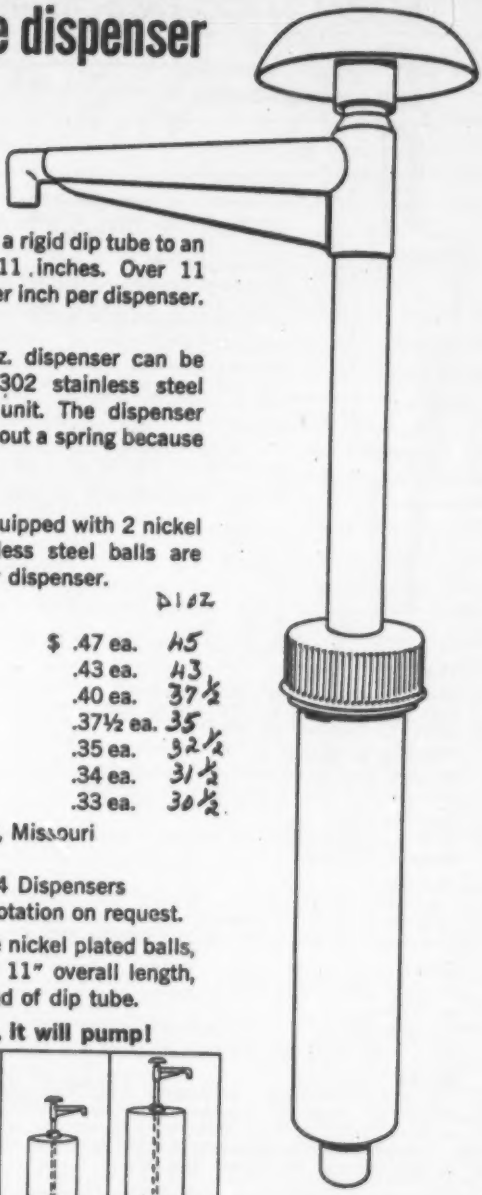

**SPECIAL HEAD**

Unbreakable . . . designed to fit the palm of the hand for rapid action.

**REINFORCED 3" SPOUT**

Reduces breakage. Spout designed to dispense straight down . . . easier to dispense.

**COLORS**

Dispenser is furnished from stock in all white. Special colors: tan, red, green and yellow available in quantities of 5,000 or more at .005 per unit.

**VOLUME PER STROKE**

1. The MARK 30 without a spring will deliver an average of 29 cc's per stroke and is easy to dispense.
2. Equipped with a spring the MARK 30 will deliver an average of 24 cc's per stroke.
3. Equipped with a short stroke plunger, with or without a spring, the MARK 30 will deliver 15 cc's per stroke.

**CAPS**

The dispenser can be equipped with any size or type metal, molded or polyethylene cap, 38mm or larger. Bakan can furnish caps in most sizes from inventory (price list furnished on request).

**PUNCHING OR BORING**

All caps must be punched or bored to fit the MARK 30. Cost: .0035 per cap. For liner removal add .0025 per unit.

**DIP TUBES**

Will be cut to customer's specification.

Base price includes a rigid dip tube to an overall length of 11 inches. Over 11 inches add .0015 per inch per dispenser.

**SPRINGS**

The 1 oz. or ½ oz. dispenser can be equipped with a 302 stainless steel spring at .04 per unit. The dispenser operates easily without a spring because of the large head.

**VALVE BALLS**

The dispenser is equipped with 2 nickel plated balls. Stainless steel balls are available at .01 per dispenser.

**PRICES**

| | | Doz |
|---|---|---|
| 144 | $ .47 ea. | 45 |
| 500 | .43 ea. | 43 |
| 1,000 | .40 ea. | 37½ |
| 2,000 | .37½ ea. | 35 |
| 5,000 | .35 ea. | 32½ |
| 10,000 | .34 ea. | 31½ |
| 25,000 | .33 ea. | 30½ |

F.O.B. Kansas City, Missouri
Pack: Bulk
Minimum Order: 144 Dispensers
Special Packing: Quotation on request.

Above prices include nickel plated balls, rigid dip tube up to 11" overall length, 401 can base instead of dip tube.

**If it will pour, it will pump!**

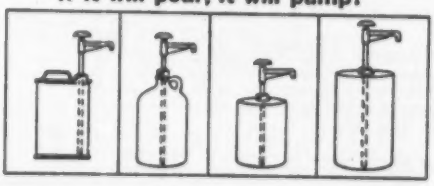

**CLEANING**

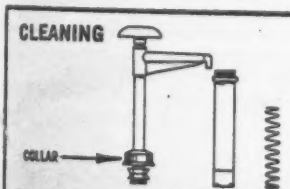


The dispenser can be taken apart by unscrewing the collar above the cap and washing and re-assembling. The dispenser has been designed with caged valve balls so that they can not be lost.

*** SHORT STROKE PLUNGER**

The MARK 30 Dispenser can be furnished with a short stroke plunger which will deliver ½ oz. per stroke with or without a spring. Cost: .01 per unit additional.

**401 CAN BASE**

The MARK 30 can be equipped with a plastic foot base so that it will fit a 401 can. The base foot furnished at no additional cost.

# BAKAN DISPENSERS

## Model 7 CC Dispenser

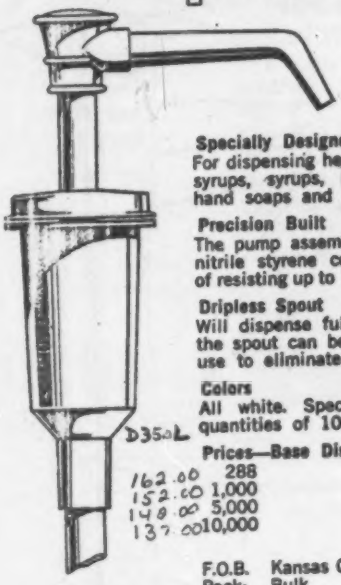

**Specially Designed**
For dispensing heavy liquids such as malt syrups, syrups, hand lotions, waterless hand soaps and chemicals.

**Precision Built**
The pump assembly is molded of acrylonitrile styrene copolymer (Tyril) capable of resisting up to 190°F. without distortion.

**Dripless Spout**
Will dispense full 7 cc's per stroke and the spout can be turned up when not in use to eliminate dripping.

**Colors**
All white. Special colors available on quantities of 100,000 or more.

**Prices—Base Dispenser without Cap**

| | |
|---|---|
| 288 | $165.00/M |
| 1,000 | 155.00/M |
| 5,000 | 145.00/M |
| 10,000 | 135.00/M |

F.O.B. Kansas City, Missouri
Pack: Bulk
Minimum Order: 288 Dispensers

**CAPS**
The 7 CC Dispenser can be equipped with any size cap, 38mm or larger. Bakan can furnish caps in most sizes from inventory (price list furnished on request).

**Punching or Boring**
All caps must be punched or bored to fit the 7 CC Dispenser. Bakan will punch or bore caps at $3.50/M.

**Liner Removal**
Caps can not be punched or bored with liners. Bakan will remove liners at $2.50/M.

**Dip Tubes**
Dip Tubes will be cut to fit standard jars, jugs and cans. Our price includes a rigid tube, up to an overall length of 8 inches. Over 8 inches, add $1.50 per inch per thousand dispensers.

**Spring**
Stainless steel 302 spring.

**Valve Balls**
Nickel plated steel balls. Stainless steel 302 balls are available at an extra $9.50 per thousand dispensers.

**Compatibility**
The plastic components of Bakan's 7 CC Dispenser are compatible with most liquids where dispensers are commonly used. It is suggested, however, that thorough tests be made by the buyer and Bakan's laboratory to make sure the dispenser is compatible with the buyer's product.

***Note: When ordering be sure to specify model number, color, cap size, style and color and dip tube length and if desired, flexible dip tubes, stainless steel or pyrex glass balls.***

## Model 10 Lotion Dispenser

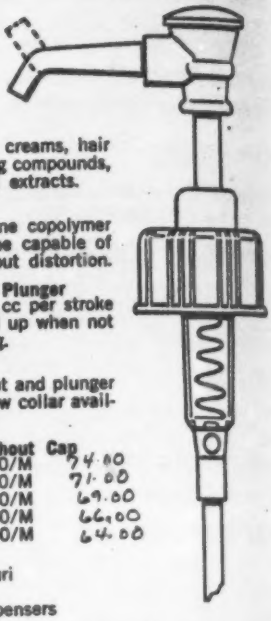

**Specially Styled**
For dispensing lotions, hand creams, hair dressings, detergents, cleaning compounds, liquid waxes, salad oils and extracts.

**Precision Built**
Molded of acrylonitrile styrene copolymer (Tyril) and linear polyethylene capable of resisting up to 190°F. without distortion.

**Dripless Spout—Full Stroke Plunger**
Will deliver approximately 1 cc per stroke and the spout can be turned up when not in use to eliminate dripping.

**Colors**
All white or white head, spout and plunger with red, blue, green or yellow collar available.

**Prices—Base Dispenser without Cap**

| | |
|---|---|
| 1,000 | $77.00/M |
| 5,000 | 72.00/M |
| 10,000 | 69.00/M |
| 25,000 | 67.00/M |
| 50,000 | 66.00/M |

F.O.B. Kansas City, Missouri
Pack: Bulk
Minimum Order: 1,000 Dispensers

**Caps**
The Model 10 may be equipped with any size or style cap, 20mm to 33mm, metal or molded. Bakan can furnish caps in most sizes from inventory (price list furnished on request).

**Punching or Boring**
Caps that are not available with the hole molded or punched in have to be punched or bored. Bakan is equipped to punch or bore caps at $3.50/M.

**Liner Removal**
Caps can not be punched or bored with liners. Bakan will remove them at $2.50/M.

**Dip Tubes**
Semi-rigid dip tubes will be cut to any desired length up to 9¾" at no additional cost. Flexible dip tubes are available at $5.00/M additional.

**Spring**
Stainless steel 302 spring.

**Valve Balls**
Nickel plated steel balls. 302 stainless steel balls are available at an additional $8.00/M dispensers. Pyrex glass balls are available at an additional $2.00/M dispensers.

**Compatibility**
The plastic components of Bakan's Model 10 Lotion Pump are compatible with most liquids where dispensers are commonly used. It is suggested, however, that thorough tests be made by the buyer and Bakan's laboratory to make sure the dispenser is compatible with the buyer's product.


**BAKAN PLASTICS**
DIVISION OF COOK CHEMICAL COMPANY
BOX 78 • 2500 Summit
Kansas City 41, Missouri


DISTRIBUTED BY:

437

# CAP PRICES

Effective November 2, 1961

| MM Size | Finish | Quantity Prices Per Thousand | | | |
|---|---|---|---|---|---|
| | | Color | Metal | Black Phenolic | White Urea |
| 20 | 400 | W | $2.42* ** | $4.73* | $6.53* |
| 22 | 400 | W | 2.57* ** | 5.18* | 7.68 |
| 2[illegible] | 400 | W | 2.82* ** | 5.71* ** | 8.28* ** |
| 26 | 400 | W B | 2.92* ** | | |
| 28 | 400 | W B Y | 3.30* ** | 6.00* ** | 9.22* ** |
| 30 | Beta | B R | 3.99* ** | | |
| 30 | 400 | | | 7.98 | 11.29 |
| 33 | 400 | W | 3.67* ** | 8.80* | 12.08 |
| 38 | 400 | W | 4.13* | 11.31* | 15.19 |
| 43 | 400 | W | 5.10 | | |
| 48 | 400 | W | 5.58* | | |
| 53 | 400 | W | 6.89* | | |
| 58 | 400 | W | 7.17 | | |
| 63 | 400 | W | 8.75 | | |
| 70 | 400 | W | 10.22 | | |
| 83 | 400 | W | 14.91* | | |
| 89 | 400 | W | 17.13 | | |
| 120 | 400 | W | 25.94 | | |
| G450 | --- | W | 10.72* | | |
| 20 | 410 | | | 5.50* | 7.36* |
| 22 | 410 | | | 6.28 | 8.49* |
| 24 | 410 | | | 7.34* | 9.57* |
| 28 | 410 | | | 9.35 | 13.17 |
| 20 | 415 | | | 6.62 | 8.85 |
| 22 | 415 | | | 8.52 | 12.53* |
| 24 | 415 | | | 10.05 | 15.54 |
| 24 | 430 | | | 8.01 | 11.50 |
| 28 | 430 | | | 9.53 | 13.68 |
| 38 | 430 | | | 20.73* | 29.92 |
| 60 | 440 | W | 7.85 | | |
| 100 | 440 | W | 21.03 | | |
| 1" | Tin | | 2.64* ** | | |
| 1 1/4" | Tin | | 5.34* | | |
| 1 3/4" | Tin | | 9.23* | | |

SPECIAL

| | | |
|---|---|---|
| 26 | P103 | 6.44 - High Impact Styrene |
| 28 | P100 | 6.33 - High Impact Styrene |
| 3/4" | H.D. | 11.67* ** - Styrene |

POLYETHYLENE

| | | |
|---|---|---|
| 401 | Snap Tite | 41.80 |
| 404 | Snap Tite | 44.00 |
| #10 | Snap Tite | 74.25 |
| 38 | Nat. Buttress | 55.65 |
| 38 | 400 | 23.49 |

Colors: W - White, B - Blue, Y - Yellow, R - Red

* - In Stock

** - Caps with holes Note: Add $3.50/M for punching or boring caps without holes.

PRICES SUBJECT TO CHANGE WITHOUT NOTICE

Other Sizes and Colors Quotes on Request.

438 Reco 10/17

# BAKAN
## PLASTIC SPRAYERS & DISPENSERS

## Model 3
TRIPLE-SEAL
LEAKPROOF SPRAYER

P's GG

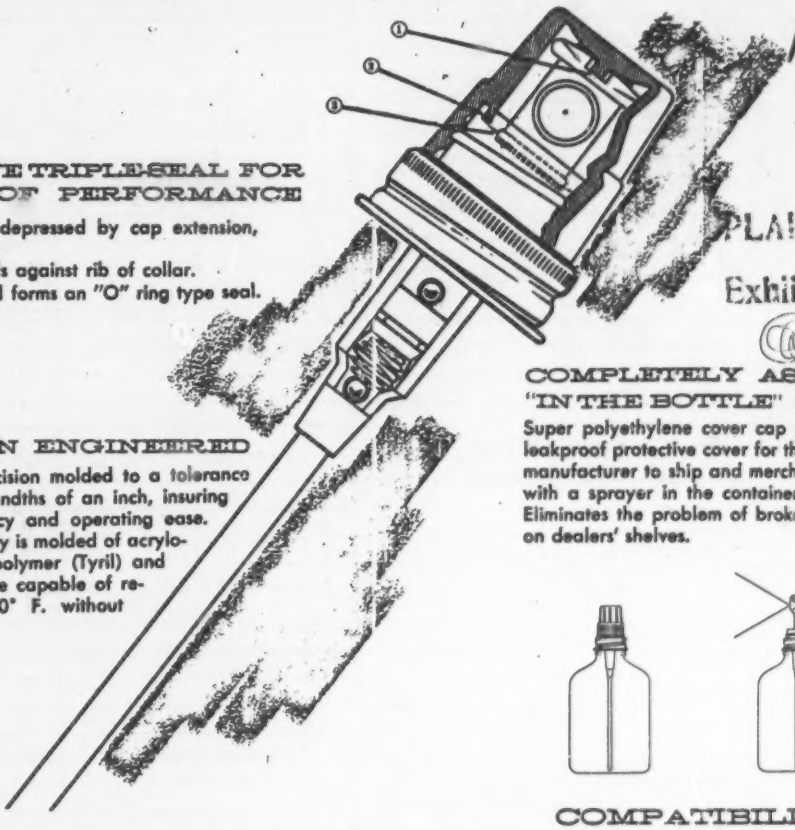


PLAINTIFF'S Exhibit GG 3/16/

### EXCLUSIVE TRIPLE-SEAL FOR LEAKPROOF PERFORMANCE

1. Diaphragm is depressed by cap extension, sealing orifice.
2. Cover cap seals against rib of collar.
3. Bottom of head forms an "O" ring type seal.

### PRECISION ENGINEERED

All parts are precision molded to a tolerance of two one-thousandths of an inch, insuring maximum efficiency and operating ease. The pump assembly is molded of acrylonitrile styrene copolymer (Tyril) and linear polyethylene capable of resisting up to 190° F. without distortion.

### COMPLETELY ASSEMBLED "IN THE BOTTLE" SPRAYER

Super polyethylene cover cap provides a sealed, leakproof protective cover for the sprayer. Enables manufacturer to ship and merchandise his product with a sprayer in the container. READY TO USE. Eliminates the problem of broken or lost sprayers on dealers' shelves.

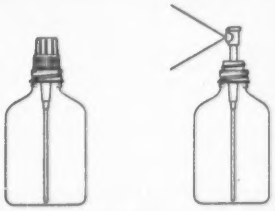

### COMPATIBILITY

The plastic components of the BAKAN Model 3 Triple-Seal Leakproof Sprayer are compatible with most chemicals where sprayers are commonly used. It is suggested, however, that each product be thoroughly tested with the sprayer to make sure they are compatible.

Model 3 Triple-Seal Leakproof Sprayers, identified as "Sprayers with Protective Caps," are patented under U.S. Letters Patent No. 2,870,943, and other patents pending.

***distributed by:***

**BAKAN** PLASTICS

DIVISION OF COOK CHEMICAL COMPANY

P.O. BOX 78 ● 2500 SUMMIT ● KANSAS CITY 41, [illegible]

439

# Model 3 BAKAN SPRAYER

TRIPLE-SEAL LEAKPROOF

## PRICE

| QUANTITY | PRICE PER THOUSAND |
|---|---|
| 1,000 | $88.00 per thousand |
| 5,000 | 81.00 per thousand |
| 10,000 | 79.00 per thousand |
| 25,000 | 77.00 per thousand |
| 50,000 | 76.00 per thousand |
| 100,000 and up | Annual contract quoted on request |

## TERMS

F.O.B. Kansas City, Missouri
MINIMUM ORDER: 1,000 sprayers to case
CASE WEIGHT: 34 lbs.

## COLORS

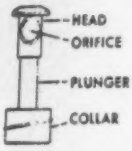


All white or white plunger and head with red, blue, green, or yellow orifice and collar. Be sure to specify color when ordering. NOTE: Head comes in WHITE only.

## CAPS:

Available in stock in following sizes and colors:

WHITE METAL—20, 22, 24, 26, 28, 33mm, 400 finish
BLUE METAL—26 & 28mm
YELLOW METAL—28mm
BLACK BAKELITE—24 & 28mm—$3.00/M extra
WHITE UREA—24 & 28mm—$6.00/M extra

BAKAN can furnish metal or molded caps in any color or size from 20mm to 38mm. Prices quoted on request. If customer furnishes caps, there will be a boring or punching charge of $2.50/M plus an additional $2.50/M for liner removal, if required.

## DIP TUBES

SEMI-RIGID STANDARD DIP TUBES will be cut to any desired length at no additional cost. FLEXIBLE DIP TUBES are available at an additional cost of $5.00/M.

When ordering specify over-all length from top of container to desired depth. Please submit sample bottle or container to insure accuracy.

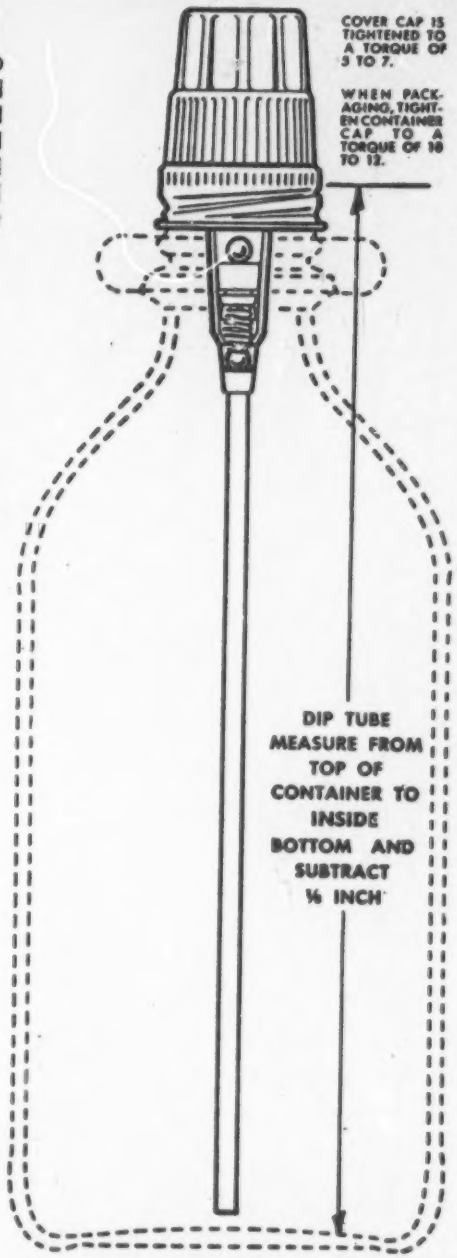


Ease of Aerosol at Low Cost

NOTE: When ordering be sure to specify (1) Model Number, (2) Cap Size and Color, (3) Sprayer Color, (4) Dip Tube Length. And, if desired, (1) Flexible Dip Tube.

PLAINTIFF'S EXHIBIT HH-1

440

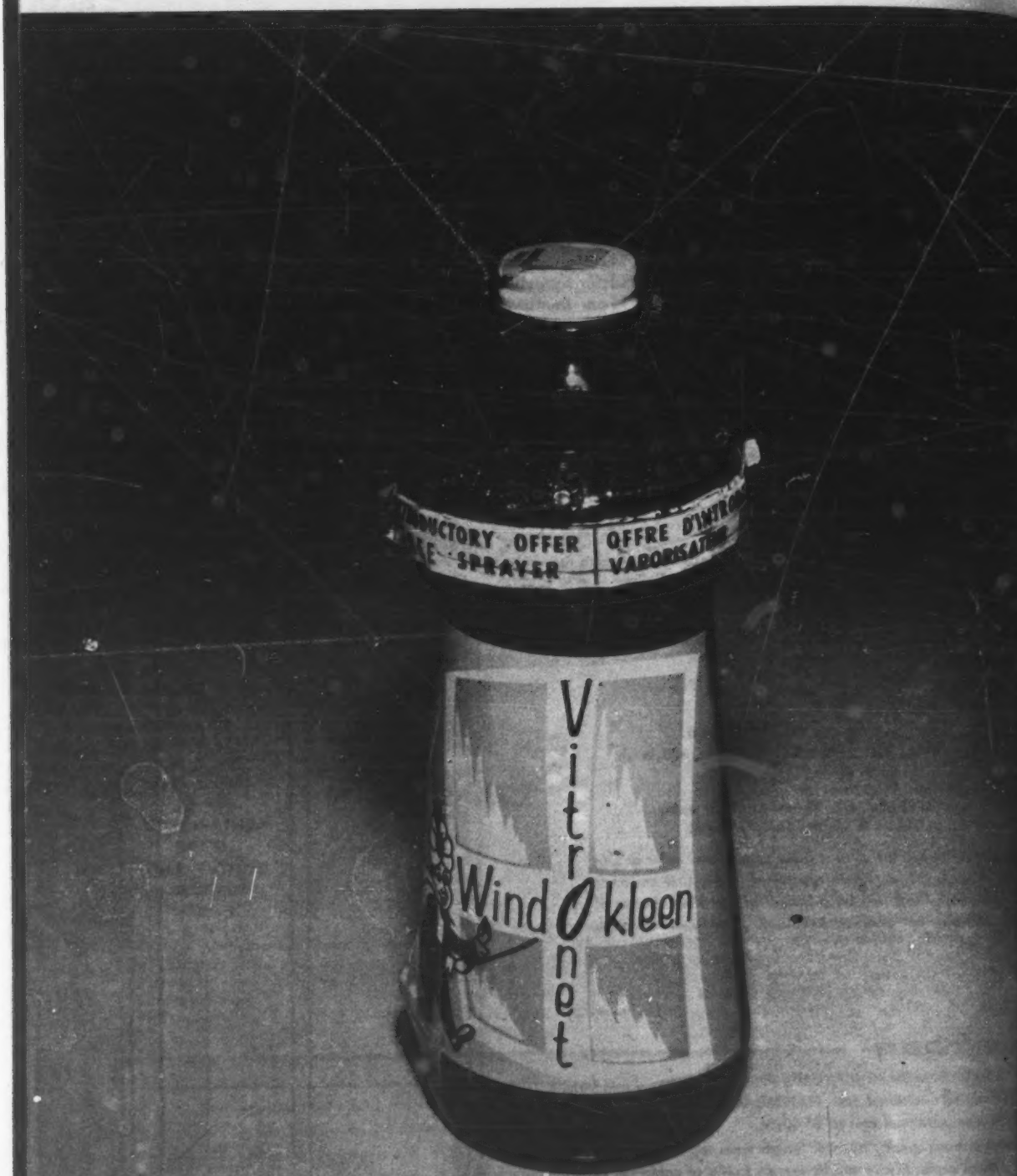


HH 1

PLAINTIFF'S EXHIBIT HH-2

441

105

PLAINTIFF'S EXHIBIT HH-3

447

PLAINTIFF'S EXHIBIT HH-4

443

PLAINTIFF'S EXHIBIT HH-5a

444.

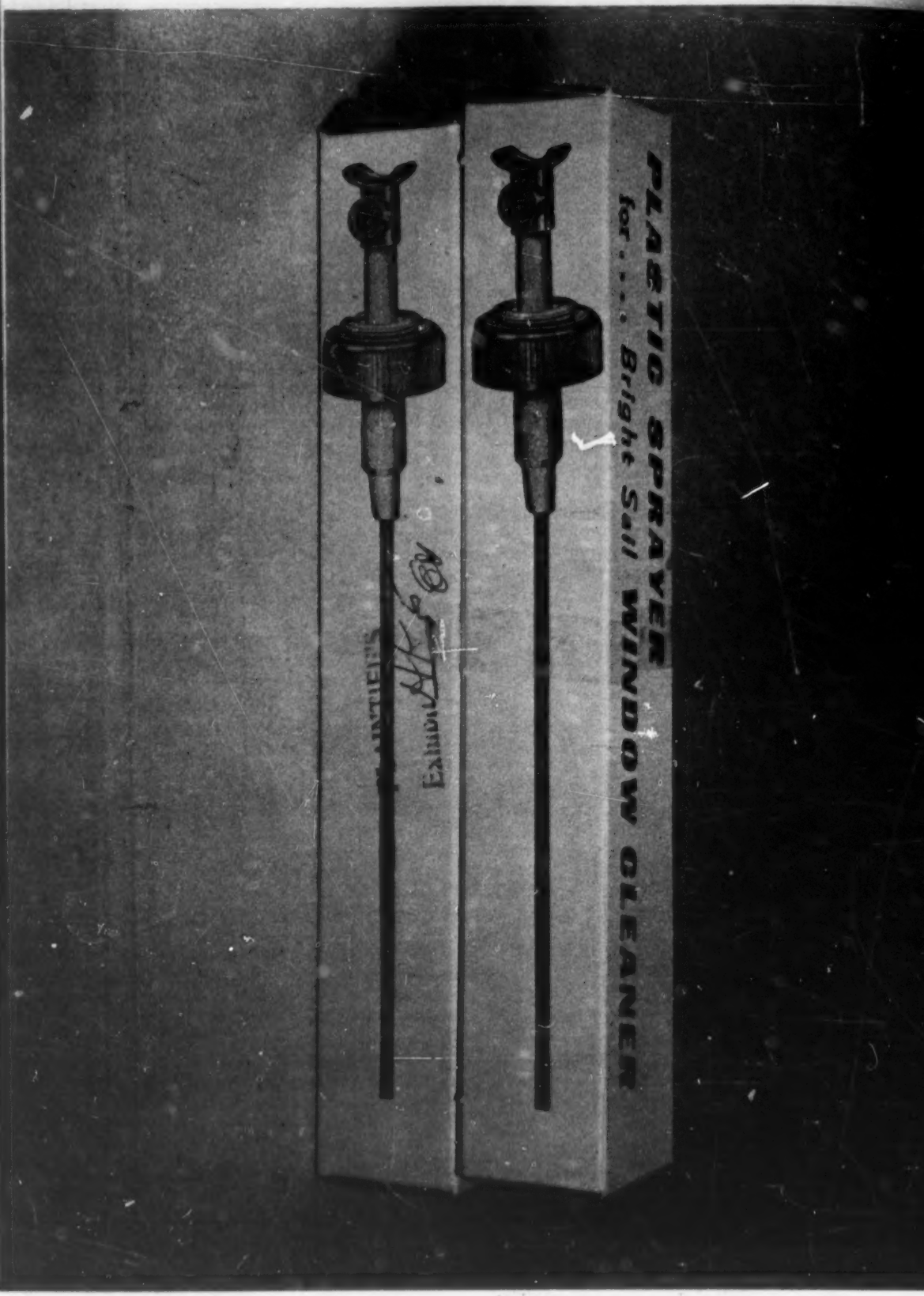

PLAINTIFF'S EXHIBIT HH-5b

443

PLAINTIFF'S EXHIBIT HH-6

446

110

PLAINTIFF'S EXHIBIT HH-7

447

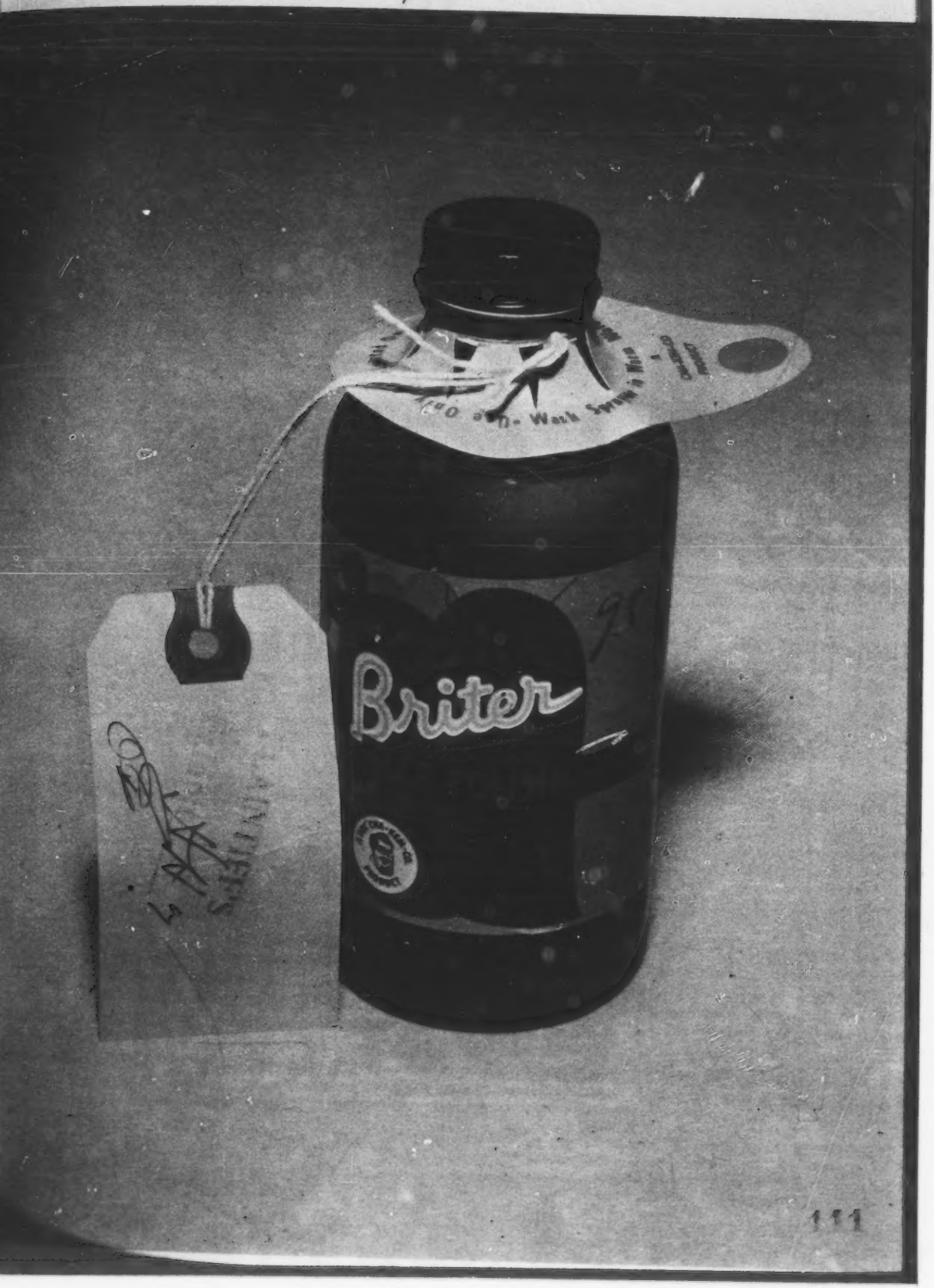


111

PLAINTIFF'S EXHIBIT HH-8

448

PLAINTIFF'S EXHIBIT HH-9

449

PLAINTIFF'S EXHIBIT HH-10

450

PLAINTIFF'S EXHIBIT HH-11

451

PLAINTIFF'S EXHIBIT HH-12

452

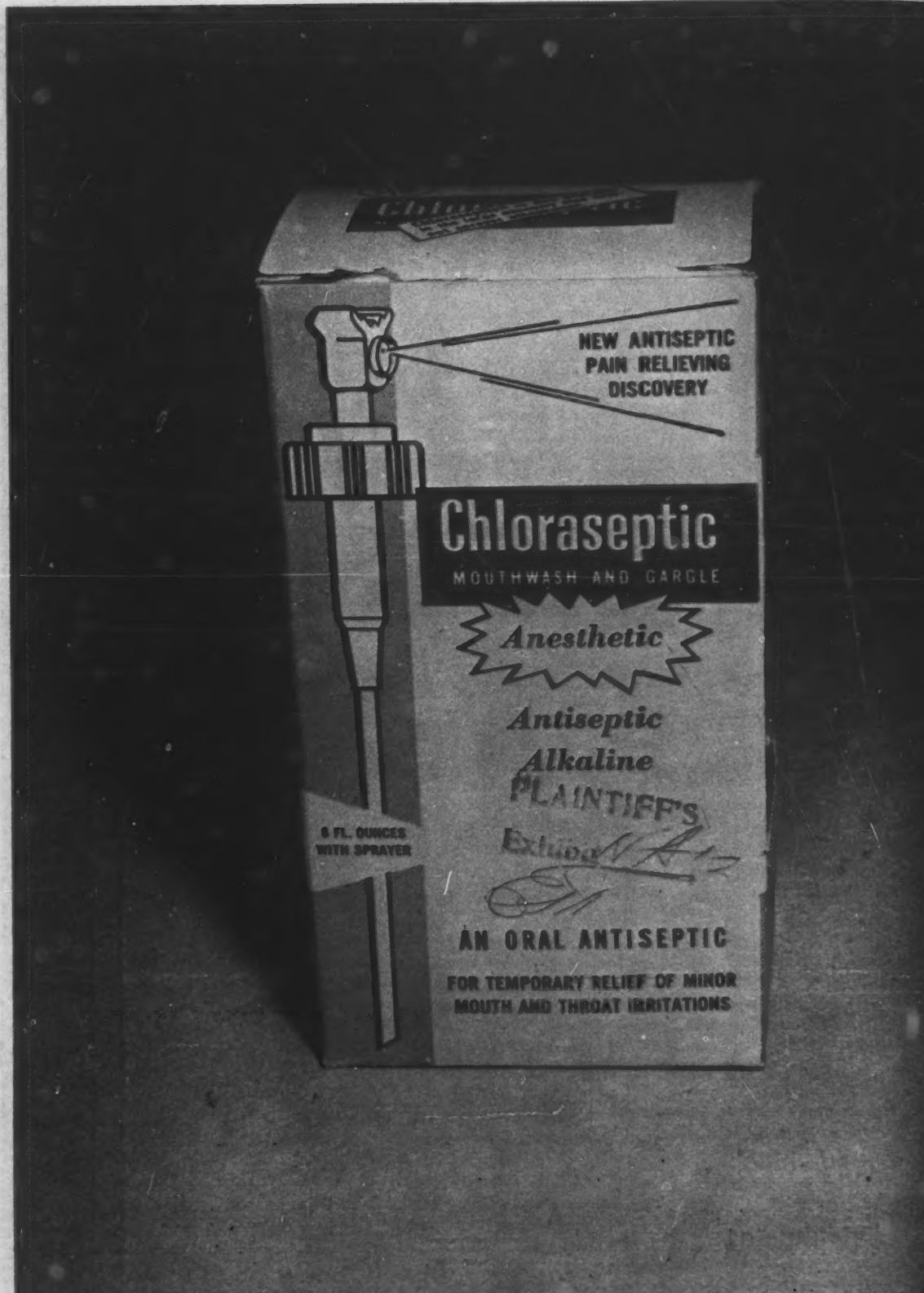

PLAINTIFF'S EXHIBIT HH-13

453

[1132] PLAINTIFF'S EXHIBIT II.

COLGATE-PALMOLIVE COMPANY'S SHIPMENTS TO ALL CUSTOMERS FOR THE YEAR 1958 OF ALL BOTTLED INSECTICIDE (SPRAYER ATTACHED TO BOTTLE BY CARDBOARD COLLAR)

| | | |
|---|---|---|
| 16 ounce bottle | — | 79,796 dozen (or cases) |
| 32 ounce bottle | — | 32,476 dozen (or cases) |
| | | 112,272 dozen |

Colgate's 1958 Price Per Case For All Customers

| | 16 oz bottle | 32 oz bottle |
|---|---|---|
| Carload | $5.63 | $9.70 |
| 50 Cases (or doz.) | 5.68 | 9.80 |
| 10 cases (or doz.) | 5.80 | 10.00 |
| 5 cases (or doz.) | 5.85 | 10.05 |
| 16 oz 79,796 x $ 5.85 = | $466,806.60 | |
| 32 oz 32,476 x $10.05 = | 326,383.80 | |
| Total = | $793,190.40 | |

PLAINTIFF'S EXHIBIT JJ
455

JJ JJ

2715480

FIG. 8

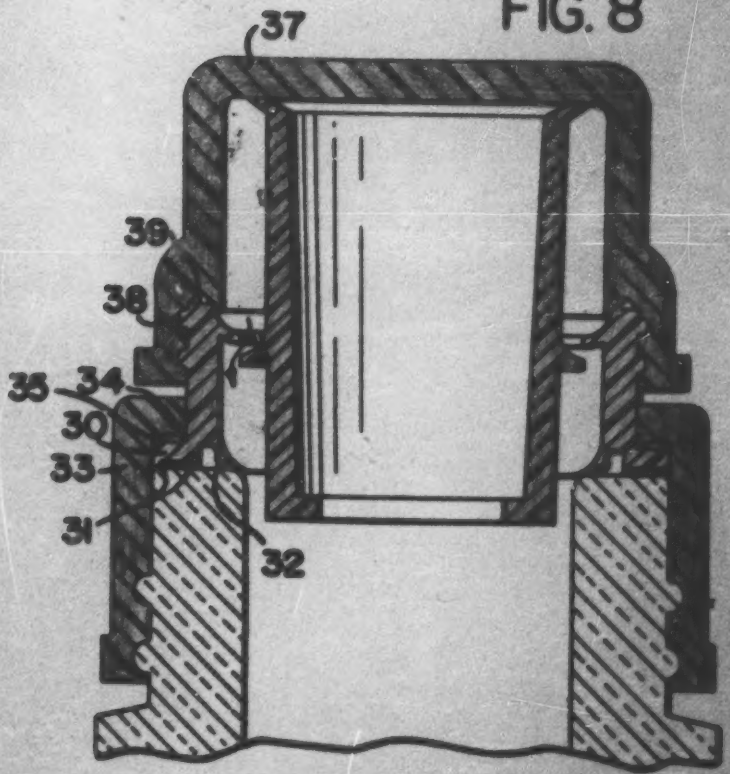


INVENTOR.

JAY G. LIVINGSTONE

P-JJ

PLAINTIFF'S EXHIBIT KK
457

MELLON.

2586687

KK

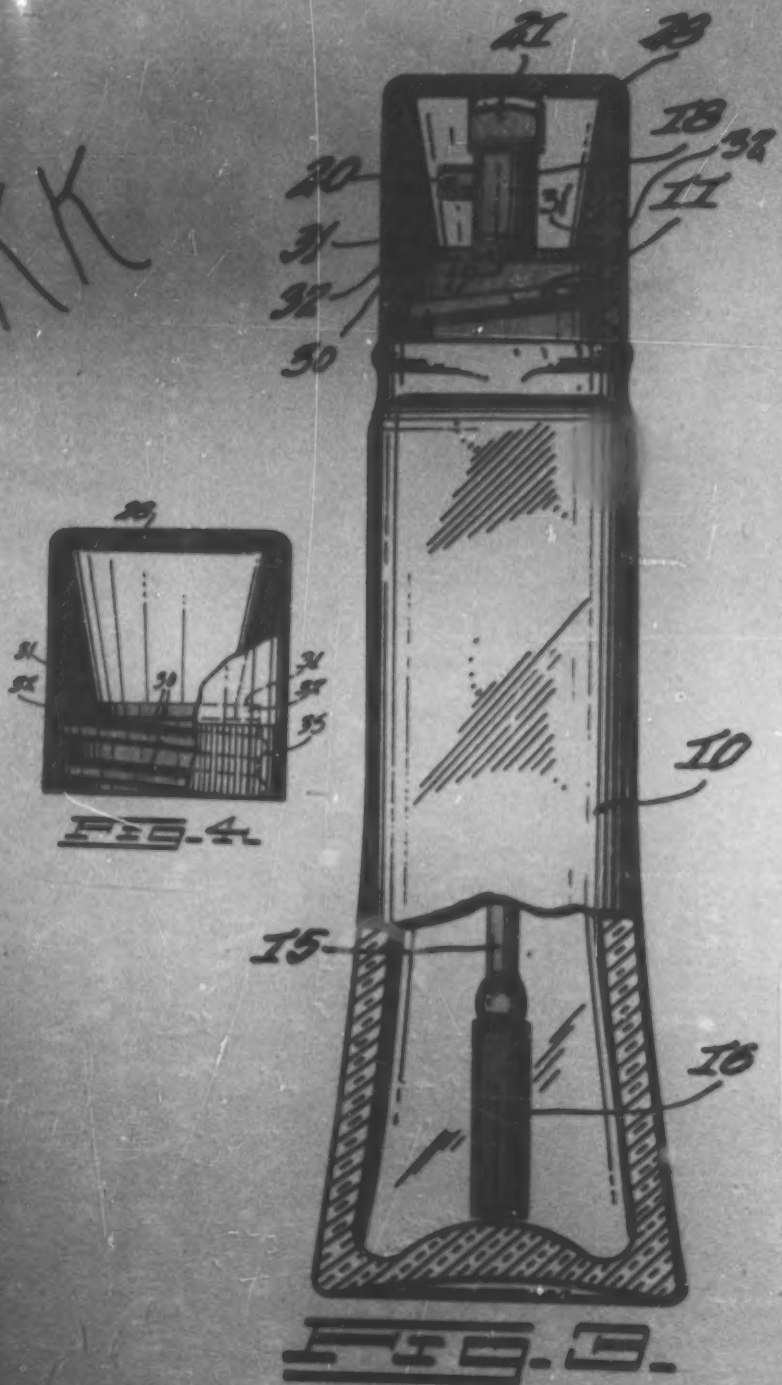


FIG. 3.




FIG. 4.

P-KK

45-8

PLAINTIFF'S EXHIBIT MM

459

July 22, 1958 W. J. SLADE 2,844,290

DETERGENT CAN

Filed July 27, 1955

FIG.1.

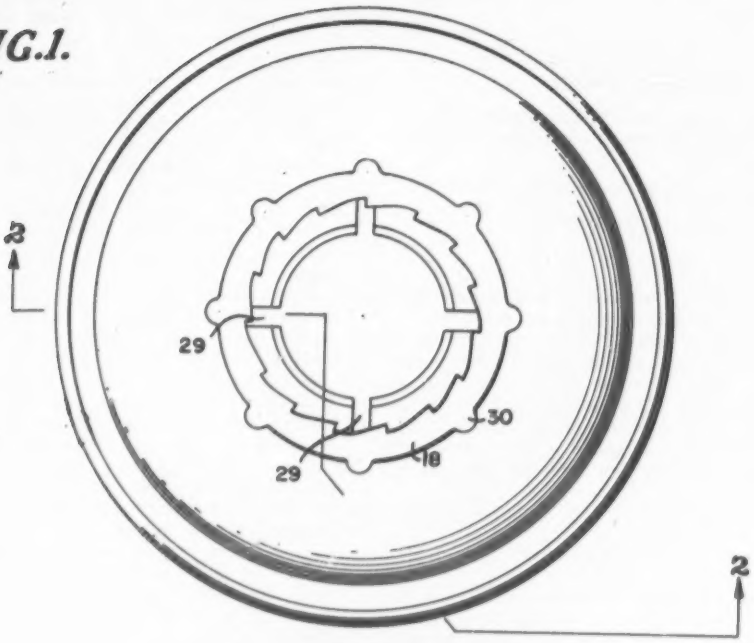


FIG.2.

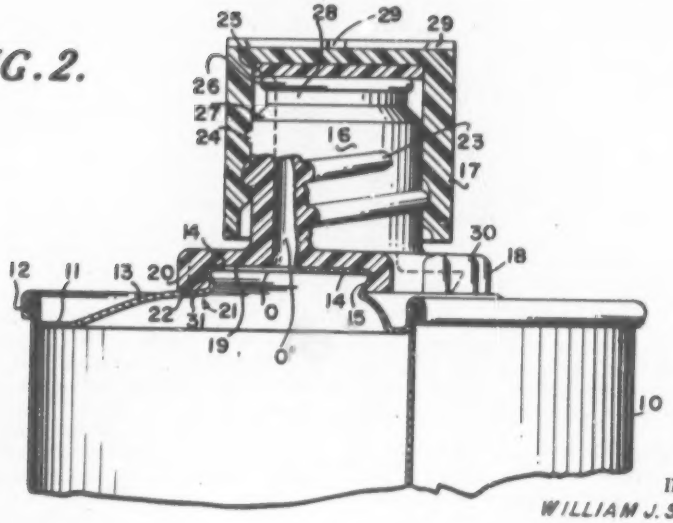


INVENTOR
WILLIAM J. SLADE

BY Cushman, Darby & Cushman
ATTORNEYS

BEST COPY AVAILABLE

PUBLISHER'S NOTICE

Material on the following frames is
the best copy available to publisher.

460

United States Patent Office

2,844,290

Patented July 22, 1958



2,844,290

# DETERGENT CAN

William J. Slade, Haddonfield, N. J., assignor to Crown Cork & Seal Company, Inc., Philadelphia, Pa., a corporation of New York

Application July 27, 1955, Serial No. 524,787

2 Claims. (Cl. 222—562)

This invention relates to containers such as metal cans useful particularly for detergent liquids and powders.

The container has its ends normally closed and one of the ends is formed with means for securely receiving a plastic pouring spout. The latter, in turn, may be threaded or otherwise provided with a cap-receiving finish to thereby receive and retain a reseal closure. Thus, the can may be effectively sealed at all times, both prior to initial opening and thereafter until the contents are used up.

Referring to the drawings:

Figure 1 is a top view, and

Figure 2 is a section on line 2—2 of Figure 1 with the container body broken away.

In the drawing, 10 indicates a conventional cylindrical metal container body having, at its top and bottom, customary metal ends 11 seamed to the body in the usual manner, as shown at 12.

The top end 11 is dome-shaped, i. e., centrally convex, as shown at 13, and the dome terminates upwardly in a continuous closed flat portion 14 having an inwardly extending shoulder 15. The flat portion 14 may be scored to aid forming the opening O.

In use, after this flat portion 14 has been severed to form an opening O of any desired size, a neck-pouring spout 16 with cap 17 is attached to the end 11 to continue the seal, as the contents are used up.

This neck-pouring spout is made of plastic such as polyethylene, and has an integral, circular base or flange 18 of greater diameter than the upstanding, cylindrical neck 16, as shown. The undersurface of the flange 18 is flat, as shown at 19, to correspond with and engage the flat surface of the portion 14 of the end. The circular skirt 20 of the flange has its inner wall 21 undercut to form an inwardly extending groove 22. This circular groove 22 will receive, in resilient, frictional, sealing fit, the circular pouring spout-receiving shoulder 15, as shown.

The neck-pouring spout 16 is shown as having a threaded cap-receiving finish 23 to receive a usual threaded reseal cap 17 of plastic, such as polyethylene, or metal, as desired. The cap is provided with the usual sealing liner 25 on its inside engaging the integral, outwardly extending, rounded bead 26 of the pouring spout. The neck above the threaded area is inclined inwardly at 27 and extends upwardly as the cylindrical portion of reduced diameter 28 terminating in the outwardly projecting, rounded bead 26. The top of the plastic closure 17 has diametrically intersecting grooves 29 for receiving a tool to turn the cap to open or closed position for convenience, and, if desired, the flange 18 is suitably knurled or provided with spaced hand-gripping projections 30 to assist in applying the pouring spout to the container and locking the same thereto, as above-described.



The container may be provided initially with the opening O and the pouring spout 16 and cap 17 in position as shown. Also, the top 14 may be scored so that the opening may be easily formed. The container may be made of plastic, such as polyethylene, and, as stated, the pouring spout and closure may be of metal or plastic.

While I have mentioned polyethylene as the preferred plastic, other suitable plastics may be used.

While the threaded finish 23 is preferred, other conventional closure-receiving finishes may be used, e. g., to receive lug caps, crowns and pressed-on caps, the closure 17 being shown with cap-receiving threads 24 to engage the threaded finish 23 for purposes of illustration.

The container structure above-described provides a continuous and reliable pouring spout and reseal for liquids, pastes and granular products which are customarily packed in metal or plastic containers.

It will be observed that the container 10 has the end 11 provided with the projection defined by the flat surface 14 and the integral shoulder 15, the latter extending inwardly and downwardly therefrom, and that the pouring spout has a neck portion 16 provided with an internal opening O' which is enlarged adjacent the flange 18, and is of reduced diameter as it passes centrally through the neck or pouring spout 16. The flange portion, as stated, has the flat portion 21 engaging the flat surface 14 of the projection, and this flange also has the depending skirt 20 formed with an internal groove 22 for receiving in frictional, resilient, sealing relation the shoulder 15 of the projection on the end 11. Whether the flat surface 14 is provided initially closed or closed and provided with a scoring defining an opening O, or the opening O is already formed in the surface 14, the respective openings O and O' communicate when the pouring spout is in position, as shown. As will be appreciated, the container can be supplied independently of the pouring spout, i. e., the spout may be attached to the container, either before or after an opening O is formed in the flat surface 14. That is, the pouring spout is detachably secured to the end 11 and, of course, where the opening O is initially formed in the surface 14, the pouring spout and its closure will form a part of the container package before or after the same has been filled.

Referring to Figure 2, it will be observed that not only does the shoulder 15 engage in the groove 22, but the flange being located at the base of the pouring spout, has the lower edge of its skirt 18 also engaging the adjacent curved top surface of the end, as shown at 31, to further assure, not only a rigid fit, but a tight seal as well.

It will be appreciated that the preferable construction consists of a metal container having a metal end with a plastic pouring spout, as illustrated.

I claim:

1. A cylindrical container having a metal end, a projection on said end having a flat surface and an integral shoulder extending inwardly and downwardly therefrom, a plastic pouring spout having a cylindrical neck portion provided with an opening and a flange portion located at the base of the pouring spout, said flange having a flat surface engaging the flat surface of the projection, a depending skirt on said pouring spout flange formed with an internal groove for receiving in frictional, resilient, sealing relation the said shoulder of the projection, the lower edge of said skirt of the flange also engaging the adjacent top surface of the end of the container, said container opening through its flat surface in said end into

the opening of the pouring spout, the pouring spout terminating in an upper, cylindrical, rounded bead portion of lesser diameter than said neck portion, and the outer wall of said pouring spout being adapted to receive a closure.

2. A container according to claim 1 having a closure thereon, said closure being in sealing relation with the rounded bead portion of said pouring spout.



**References Cited** in the file of this patent

UNITED STATES PATENTS

| | | |
|---|---|---|
| 1,500,791 | Bakken | July 8, 1924 |
| 1,653,284 | Hothersall | Dec. 20, 1927 |
| 2,249,832 | Hubschman | July 22, 1941 |
| 2,660,355 | Allen | Nov. 24, 1953 |

PLAINTIFF'S EXHIBIT NN

462

May 24, 1938. O. G. NILSON 2,118,222

COMBINED CAP AND SPOUT FOR LIQUID DISPENSING CONTAINERS

Filed Feb. 17, 1936 2 Sheets-Sheet 1

Fig. 1

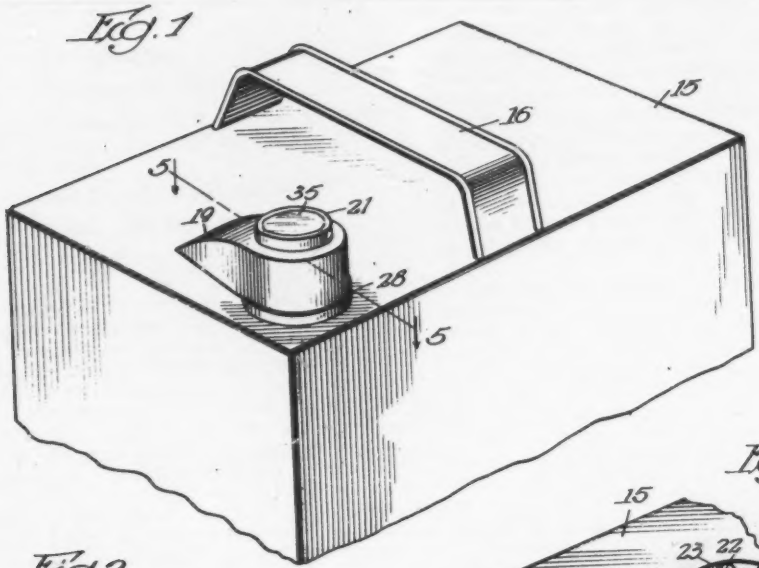


Fig. 3

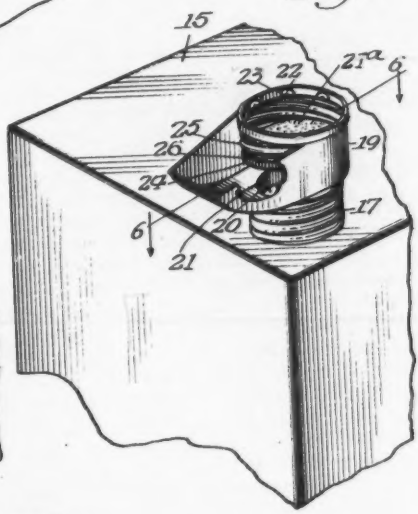


Fig. 2

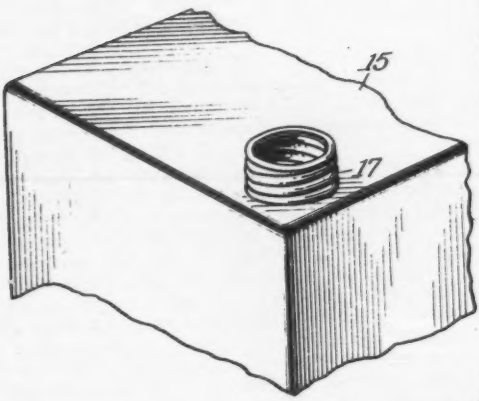


Fig. 4

Inventor
Olof G. Nilson
By [illegible]
Atty.

463

May 24, 1938. O. G. NILSON 2,118,222

COMBINED CAP AND SPOUT FOR LIQUID DISPENSING CONTAINERS

Filed Feb. 17, 1936 2 Sheets-Sheet 2

Fig. 5

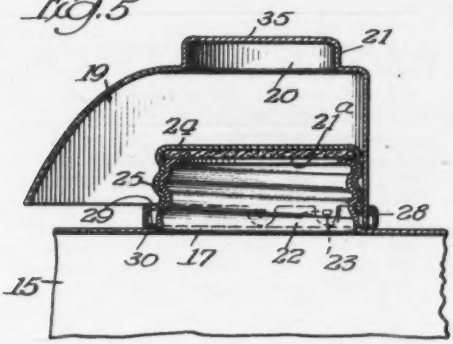


Fig. 6

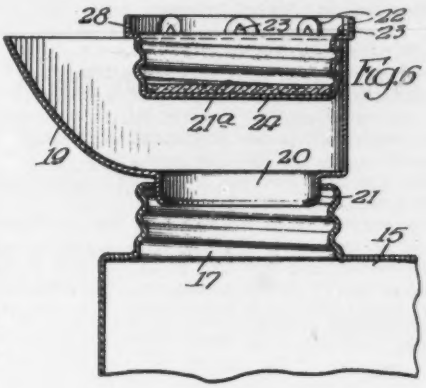


Fig. 8

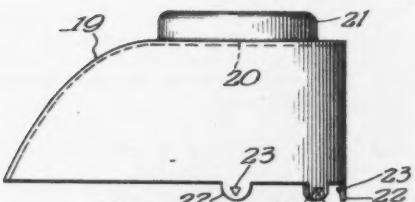


Fig. 7

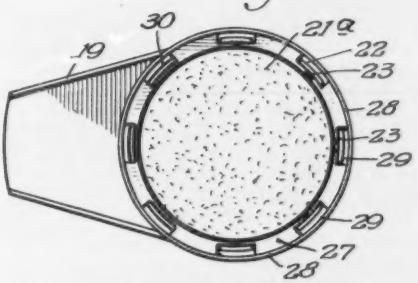


Fig. 9

Fig. 10

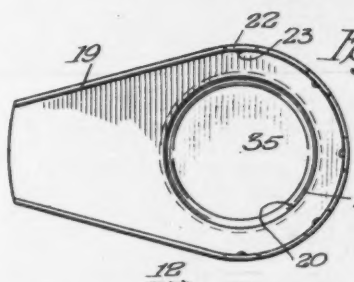


Fig. 11

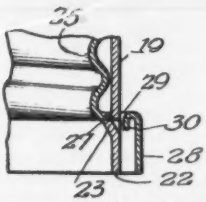


Fig. 12

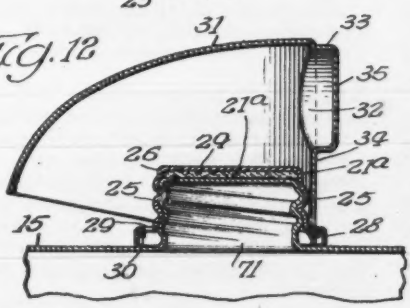


Fig. 13

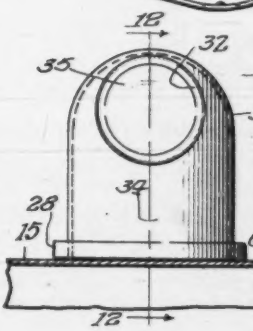


Inventor
Olof G. Nilson
By [signature]
Atty

Patented May 24, 1938

2,118,222

464

# UNITED STATES PATENT OFFICE

2,118,222

## COMBINED CAP AND SPOUT FOR LIQUID DISPENSING CONTAINERS

Olof G. Nilson, Chicago, Ill.

Application February 17, 1936, Serial No. 64,323

11 Claims. (Cl. 221—23)

This invention relates to improvements in combined cap and spout for liquid dispensing containers, and one of the objects of the invention is to provide an improved device of this character which may be readily converted from one use to the other, and which will be of a simple, durable, rigid and compact construction and effective and efficient in operation.

A further object is to provide an improved device of this character having the parts so arranged, that when the same is applied in one position to the nozzle of a dispensing container for sealing the same against delivery of liquid therefrom, the spout will at all times be disposed within the confines or within the plane of the periphery of the container, thereby insuring that the spout will be protected, and furthermore there will be no projecting spout, with the result that the containers may be closely packed for shipment or storage purposes.

A further object is to provide an improved device of this character in which the spout which is connected with the sealing cap will serve as a means for assisting in unscrewing or removing the cap.

A further object is to provide an improved device of this character in which the cap and the spout are separately constructed and may be separately packed for shipment, thus rendering it possible that the cap may be applied to the nozzle and completely seated to close the same, before the spout is attached, after which the spout may be attached to the cap at any desired position with respect thereto, so that the spout will be entirely disposed within the confines of the container walls, the two being independently secured together without the use of solder, brazing or welding.

A further object is to provide an improved device of this character having the parts so arranged and constructed that neither one will interfere with the operation of the other.

A further object is to provide an improved combined cap and spout which may be separately manufactured, and then connected together in assembled relation, the connecting means between the two being of such a nature and construction as will enable the user to cause the nozzle to assume any predetermined relation or position with respect to the cap, regardless of whether the cap is attached to the dispensing container nozzle, or not.

A further object is to provide improved means in a device of this character whereby the position of the spout can be predetermined and the operator will be assured that when the cap is seated in a sealing position, the spout will always be disposed within a predetermined area with respect to the walls or periphery of the container.

A further object is to provide in a combined cap and spout, means for temporarily forming a closure for the inlet opening of the spout, while the cap is being employed for sealing the dispensing container nozzle.

To the attainment of these ends and the accomplishment of other new and useful objects as will appear, the invention consists in the features of novelty, in substantially the construction, combination and arrangement of the several parts hereinafter more fully described and claimed and shown in the accompanying drawings illustrating this invention, and in which

Figure 1 is a perspective view of a portion of a dispensing container having a combined cap and spout applied thereto, and constructed in accordance with the principles of this invention, and with the cap in a position to seal the nozzle.

Figure 2 is a detail perspective view of a portion of the container showing the outlet nozzle.

Figure 3 is a detail perspective view of a portion of the container showing the combined cap and spout, with a portion of the spout broken away, as applied to the outlet nozzle in position to deliver liquid from the container.

Figure 4 is a detail perspective view, partially broken away, of the combined cap and spout.

Figure 5 is a detail sectional view, on an enlarged scale, as taken on line 5—5, Figure 1.

Figure 6 is a detail sectional view, on an enlarged scale, as taken on line 6—6, Figure 3.

Figure 7 is a bottom plan view of the cap and spout.

Figure 8 is a side elevation of the spout detached from the cap.

Figure 9 is an elevation of the cap.

Figure 10 is a bottom plan view of Figure 8.

Figure 11 is a detail, vertical sectional view of a portion of the nozzle and spout and showing the manner of securing the two together.

Figure 12 is a vertical sectional view taken on line 12—12, Figure 13, of another form of the invention.

Figure 13 is a left hand end elevation of Figure 12.

Referring more particularly to the drawings, the numeral 15 designates an ordinary dispensing container provided with a handle 16 and having a discharge outlet nozzle 17, which latter is preferably provided with screw threads 18 in the ordinary and well known manner.

The numeral 19 designates a delivery spout of any desired size and configuration and is constructed of any suitable material, but is preferably of a channel formation.

In one wall of the spout there is provided an inlet opening 20 encompassed by an outwardly projecting flange 21 formed in any suitable manner and projecting from the end of the wall of the spout are lugs or projections 22, any number of which may be provided and which may be arranged in any suitable position. Each of the projections 22 is provided with a laterally projecting lug 23 formed in any suitable manner, preferably by striking up a portion of the material of the projection.

The numeral 24 designates a closure cap of any suitable configuration, but is preferably provided with a body portion having threads 25 and a knurled portion 26 to facilitate in the operation of the cap.

The cap is preferably provided at its base with a laterally projecting flange 27 surrounded by a depending skirt 28, and in the flange 27 apertures or openings 29 are provided. These openings are formed in any suitable manner, preferably by piercing the material and deflecting a portion thereof downwardly as at 30, to stand within the skirt 28, and this portion 30 serves as a means for assisting in locking the parts together.

In assembling the parts, the projections 22 are inserted into the respective openings 29 in the flange 28 of the cap 24, so that the upper edge of the lugs 23 will pass below the bottom of the flange 27, and by reason of the resiliency of the material from which the spout is formed, the lugs 23 will spring or assume positions under a portion of the flange 27 adjacent the openings 29. The deflected portion 30 of the cap also assists, by reason of its resilient nature, in positioning the lug 23 beneath the flange 27, thereby locking the cap and spout together.

The spout 19 may be of any desired depth so that the cap 24 will extend into the spout for any desired distance, but only sufficiently so as not to restrict to any great extent the interior of the spout 19.

In the form of the invention shown in Figures 5 and 6, the top of the cap 24 is arranged in alinement with the inlet opening 20 of the spout, and the opening 20 is preferably of a diameter substantially less than the diameter of the top of the cap 24.

If desired, and in order to insure a perfect sealing of the discharge nozzle 17 by the cap 24, a filling material 21a, such as cork or the like, may be arranged within the cap, as shown in Figure 5.

When the parts are thus locked together, the device may be used in the position shown in Figure 5, that is, so that the cap will form a closure for the discharge nozzle of the container, and in this instance the spout 19 will not interfere with the operation of the cap.

When, however, it is desired to dispense the contents of the container 15, the cap 24 may be removed, and the spout 19 will form a handle to assist in unscrewing or detaching the cap from the discharge nozzle.

The device is then inverted and the flange 21 may then be inserted into the discharge nozzle 17, as shown in Figure 6, so that the contents of the container may be poured out through the spout.

In this form of the invention the top of the cap 24 will serve as a baffle or deflector for the liquid from the container and will direct it through the spout.

When the device is used as a spout, sufficient air will be admitted into the container through the openings 29 in the cap and also through the spout to permit the liquid to flow out of the container and thereby obviate the necessity of perforating the wall of the container.

In the form of the invention shown in Figures 12 and 13, the spout 31 is provided with an inlet opening 32 having a flange 33 encompassing the same, but in this form of the invention the inlet opening 32 is disposed in one of the upright walls 34 of the spout, so that the longitudinal diameter of the spout 31 passing through the inlet opening 32 will intersect the longitudinal diameter of the cap 24. The opening 32 in this form of the invention being to one side of the cap 24, so that when the cap 24 is removed and the spout attached to the discharge nozzle 17 by means of the flange 33 telescoping thereinto, there will be a direct pour of the liquid from the container and through the nozzle.

With this invention it will be manifest that the spout and the cap may be manufactured separately and shipped in a knocked-down condition.

Furthermore, the user will always be assured that no portion of the spout will project beyond the sides of the container while the cap is in a sealing position.

This is rendered possible by reason of the fact that the spout may be connected to the cap in any predetermined position so as to occupy a space within a predetermined area with respect to the periphery of the container.

One way of accomplishing this result is to first apply the cap 24 to the discharge nozzle and completely seat the same.

The spout may then be secured to the cap by positioning the spout in any desired relation with respect to the cap, then inserting the projections 22 of the spout in the predetermined openings 29 of the cap. When the spout is then pressed downwardly with respect to the cap, the lugs or projections 23 on the spout 19 will pass or spring beneath the edge of the flange 27 adjacent the respective openings 29 in the flange 27 of the cap.

Obviously, the spout 19 may be rotated on a vertical axis until the desired position of the spout with respect to the cap 24 and the container 15 is obtained before the cap and spout are secured together.

It may be desired or advisable to provide a temporary closure for the inlet opening of the spout and in that event a closure 35 may be formed from a portion of the material of the spout, which is shaped to form the flange 21. If such temporary closure 35 is provided, it may be partially severed from the flange 21 so as to enable the operator to readily remove this closure when it is desired to use the spout for dispensing the contents of the container.

Obviously and if desired, a similar closure may be provided for the inlet opening of the spout shown in Figures 12 and 13.

It will also be manifest that with the form of the invention shown in Figures 5 and 6, the end of the cap 24 being in alinement with the inlet opening 20 of the spout, will overcome pulsations of the liquid when it is being poured out of the container and thereby cause the liquid to flow out in a steady or even stream.

The usual cause of pulsations in the liquid is

that air must replace the liquid poured from the container. This, however, is not gradual, as there is a certain amount of vacuum created in the container, and air is sucked in through the liquid, causing the liquid at that moment to spurt. In the present invention this force strikes the cap which projects into the spout, causing the liquid to take a right angle turn, thereby causing the liquid to flow without pulsation.

It will also be manifest that with the present invention, the nozzle of the container may be placed at the very edge of the container, thereby eliminating waste of the liquid, by insuring that practically all of the liquid may be dispensed, as practically all of the containers which require a pouring spout have flat tops.

While the preferred forms of the invention have been herein shown and described, it is to be understood that various changes may be made in the details of construction and in the combination and arrangement of the several parts, within the scope of the claims, without departing from the spirit of this invention.

What is claimed as new is:—

1. A combined closure cap and spout, threaded means for securing the cap, and friction means for securing the spout to the nozzle of a dispensing container, said cap nested with and encompassed by the spout, and means for selectively securing the spout to the cap after the cap is seated on the nozzle and with respect to the means by which the cap is secured to the nozzle, whereby when the cap is seated on the nozzle the spout will be disposed, in its inoperative position, within the plane of the periphery of the container.

2. In combination a closure cap, means for securing the cap to a nozzle of a dispensing container, a spout, means for securing said spout to said nozzle, and means for securing the cap and spout together in predetermined relative positions after the cap is seated on the nozzle, whereby when one is secured to the said nozzle, the other will be maintained in an inactive position, the top of said cap being spaced from but in alinement with the inlet opening of said spout and extending entirely thereacross.

3. In combination, a closure cap, means for securing the same to the discharge nozzle of a dispensing container, a spout, means for securing the spout to said nozzle when the said cap is detached therefrom, and means for securing the spout to the cap in nested relation, after the latter is seated with respect to the nozzle, whereby the projection of the spout may be positioned within the plane of the periphery of the body of the container while the cap is in a sealing position.

4. In combination, a closure cap, means for securing the same to the discharge nozzle of a dispensing container, a spout, means for securing the spout to said nozzle when the said cap is detached therefrom, and means for securing the spout to the cap in nested relation, after the latter is seated with respect to the nozzle, whereby the projection of the spout may be positioned within the plane of the periphery of the body of the container while the cap is in a sealing position, said cap and spout being positioned with respect to each other so that neither will interfere with the operation of the other, when in use for their respective designed purposes.

5. As a unitary structure, a closure cap for the nozzle of a dispensing container, a spout having an entrance opening and a discharge outlet, said entrance opening adapted to be secured to the nozzle, and means for securing the spout to the cap, the said means embodying a projecting portion on the spout, a laterally projecting shoulder on said portion, said projection and shoulder projecting through an opening in the cap, whereby said shoulder will engage under a wall of said opening.

6. As a unitary structure, a closure cap for the nozzle of a dispensing container, a spout having an entrance opening and a discharge outlet, said entrance opening adapted to be secured to the nozzle, means for securing the spout to the cap, the said means embodying a projecting portion on the spout, a laterally projecting shoulder on said portion, said projection and shoulder projecting through an opening in the cap, whereby said shoulder will engage under a wall of said opening, and means for assisting in positioning the said shoulder under said wall.

7. As a unitary structure a sealing cap for the nozzle of a dispensing container, a delivery spout of substantial channel formation, an entrance opening in one wall of the spout, a projecting flange encompassing said opening and adapted to be frictionally telescoped with said nozzle when the cap is detached from the nozzle, means securing the cap and nozzle together in nested relation and in such position that when either is rendered active the other will be rendered inactive, and a temporary closure for normally sealing the said entrance opening in the wall of said spout.

8. As a unitary structure a sealing cap for the nozzle of a dispensing container, a delivery spout of substantial channel formation, an entrance opening in one wall of the spout, a projecting flange encompassing said opening and adapted to be frictionally telescoped with said nozzle when the cap is detached from the nozzle, and means securing the cap and nozzle together in nested relation and in such position that when either is rendered active the other will be rendered inactive, a portion of the material from which said flange is formed being shaped to normally form a temporary closure for the said entrance opening of the spout.

9. In combination, a closure cap, means for securing the cap to the nozzle of a dispensing container, a spout normally separate from the cap, means for securing the spout to the nozzle, and means for securing the spout to the cap in any selected position with respect to the cap, and against separation with relation to the cap, after the cap has been secured to the said nozzle, and in such a position with relation to the cap, that when either the cap or spout is rendered active with respect to the nozzle, the other of them will not interfere with the actively positioned one.

10. In combination, a closure cap, means for securing the cap to the nozzle of a dispensing container, a spout normally separate from the cap, means for securing the spout to the nozzle, and means for securing the spout to the cap in any selected position with respect to the cap, and against separation with relation to the cap, after the cap has been secured to the said nozzle, and in such a position with relation to the cap, that when either the cap or spout is rendered active with respect to the nozzle, the other of them will not interfere with the actively positioned one, said cap being so disposed with

respect to the spout, spaced from and extending across the container discharge opening, that the liquid poured from the container will contact and be deflected by said cap and out of the spout to maintain against pulsation the liquid being poured.

11. As a unitary structure, a spout separate from the cap, said spout having an entrance opening and a discharge outlet, said entrance opening adapted to be secured to the nozzle, means embodying interlocking portions on the cap and spout for securing them together in predetermined relation after the cap is secured to the nozzle, and against separation with respect to each other, said cap and spout being also disposed with respect to each other, that when either one is secured to the nozzle, the other will not interfere with the one that is so actively positioned.

OLOF G. NILSON.

PLAINTIFF'S EXHIBIT 66

468

Mar. 6, 1923.

1,447,712

J. W. DARLEY, JR

CONTAINER

Filed Sept. 21, 1920

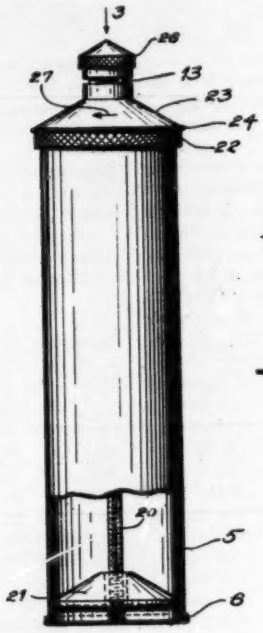


Fig. 1

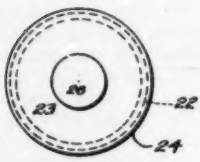


Fig. 3

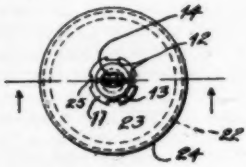


Fig. 4

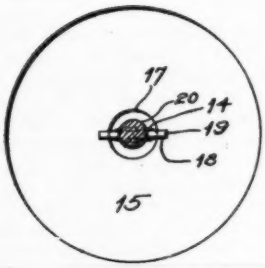


Fig. 5

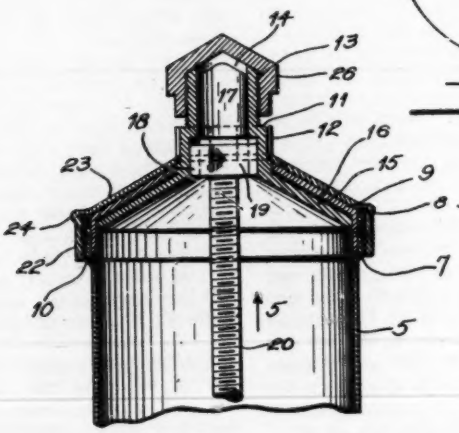


Fig. 2

Inventor

John W. Darley Jr.

469

Patented Mar. 6, 1923. 1,447,712

# UNITED STATES PATENT OFFICE.

JOHN W. DARLEY, JR., OF BALTIMORE, MARYLAND, ASSIGNOR TO CHARLES S. COHEN, OF BROOKLYN, NEW YORK.

## CONTAINER.

Application filed September 21, 1920. Serial No. 411,822.

*To all whom it may concern:*

Be it known that I, JOHN W. DARLEY, JR., a citizen of the United States, residing at Baltimore, in the State of Maryland, have invented certain new and useful Improvements in Containers (Case A); and I do hereby declare the following to be a full, clear, and exact description of the invention, such as will enable others skilled in the art to which it appertains to make and use the same.

My invention relates to containers for tooth paste, shaving creams, cold cream and for any other semi-liquid substances.

Among the objects of my invention are:—

To provide a container which shall be artistic in appearance and which shall not be deformed in use.

To provide a container which can be readily filled and sealed but which will deliver any desired quantity of the contents thereof and shut off the delivery.

To provide a container having means for effectively preventing creeping of the contents after the delivery is shut off.

To provide a container which can be readily formed by the use of simple tools.

In carrying out my invention I make use of the instrumentalities illustrated in the accompanying drawings, in which:—

Figure 1 is a side view of my improved container partly in section.

Fig. 2 is an enlarged sectional view of the upper portion of Figure 1.

Fig. 3 is a view of Figure 1 looking in the direction of the arrow 3 in said figure.

Fig. 4 is a view of the parts shown in Fig. 1 with the closing cap removed.

Fig. 5 is a view of some of the parts shown in Fig. 2 looking in the direction of the arrow 5 in said figure.

In the drawings:—

5 represents a casing which may be formed of any approved material having the bottom 6 crimped at the lower end thereof. The upper end of the casing 5 is formed with the enlarged portion 7 having the flaring upper edge 8.

The frustro-conical end 9 is formed integrally with the cylindrical flange 10 and the latter fits snugly within the enlarged portion 7. Through the frustro-conical end 9 projects the cylinder 11 having the slots 12 and terminating in the threaded end 13 in the end of which is formed the lenticular slot 14.

The cylinder 11 is formed integrally with the frustro-conical portion 15 between which and the frustro-conical portion 9 is mounted the paper washer 16, the purpose of which is to prevent seepage of the paste between the frustro-conical end 9 and portion 15.

A cylindrical hole 17 extends through the cylinder 11 and extension 13 to the lenticular opening 14 and a slot 18 is formed in the cylinder 11 for the reception of the head 19 of the screw 20. On the lower end of the screw 20 there is threaded the plunger 21 which may be of any approved construction and is shaped to closely approach the inner surface of the frustro-conical portion 15.

The operating cap comprises the knurled cylindrical portion 22 and the frustro-conical portion 23 near the juncture of which is a bead 24 the inner surface of which embraces the flaring upper edge 8 and prevents displacement of the operating cap from the container.

The frustro-conical portion 23 is provided with projections 25 which fit in the grooves 12 and thus lock the operating cap to the cylinder 11, and since the slot 18 in the latter embraces the head 19 of the screw 20, it is evident that revolution of the operating cap will produce revolution of the screw 20. The cap 26 is screwed upon the threaded extension 13 to close the slot 14.

In filling my improved container, the screw 20 and piston 21 are to be placed therein as shown. The paste is then to be placed within the container and the slot 18 within the cylinder 11 is to be placed to embrace the head 19 of the screw 20. The paper washer 16 is then to be laid upon the frustro-conical portion 15 and the cylindrical flange 10 of the end 9 is then to be placed within the enlarged portion 7 of the casing 5 and forced to the position shown in Fig. 2. The projections 25 are then to be placed within the slots 12 of the cylinder 11 and moved downwardly until the bead 24 embraces the flaring edge 8. The cap 26 can then be screwed in place and the container is ready for shipment.

When it is desired to use the container, the operator unscrews the cap 26 and then holding the casing 5 in his left hand he applies the thumb and forefinger thereof to the knurled portion 22 of the operating cap and moving his thumb upwardly and his forefinger downwardly, he turns the oper-

ating cap in the direction of the arrow 27 in Figure 1, thus causing the piston 21 to move upwardly, and forcing some of the paste out through the lenticular slot 14.

This effect obtains because the friction between the casing and the piston prevents the latter from turning, and the end of the screw 20 merely rests against the inner surface of the bottom 6.

When a sufficient quantity of the paste has been ejected, the operator then reverses the direction of movement of his thumb and forefinger and turns the operating cap in a direction opposite to the arrow 27, thus causing the piston 21 to move slightly toward the bottom 6 and relieving its pressure from the paste within the container, thus effectively preventing creeping of the paste through the slot 14.

The cap 26 can then be applied to container.

Thus it will be seen that I provide a simple, cheap and effective container, capable of easy filling and preserving its artistic appearance while in use.

I claim:—

1. The combination with a casing, of a piston having frictional engagement therewith, a screw threaded in said piston, an end fixed in said casing, an operating cap revolubly mounted on said casing and a member extending through said end and having operative connection with said screw and cap and an eduction passage to the interior of said casing.

2. The combination with a casing, of a piston having frictional engagement therewith, a screw threaded in said piston, an end fixed in said casing, a member extending through said end and having a flange parallel with said end, a sealing washer between said end and flange, a passage through said member, an operative connection between said screw and member and means for turning said member.

3. The combination with a casing, of a piston therein, a screw threaded in said piston, a member having operative connection with said screw and a passage to the interior of said casing through said member and a cap for operating said member.

In testimony whereof, I affix my signature.

JOHN W. DARLEY, Jr.

PLAINTIFF'S EXHIBIT PP
471

PP

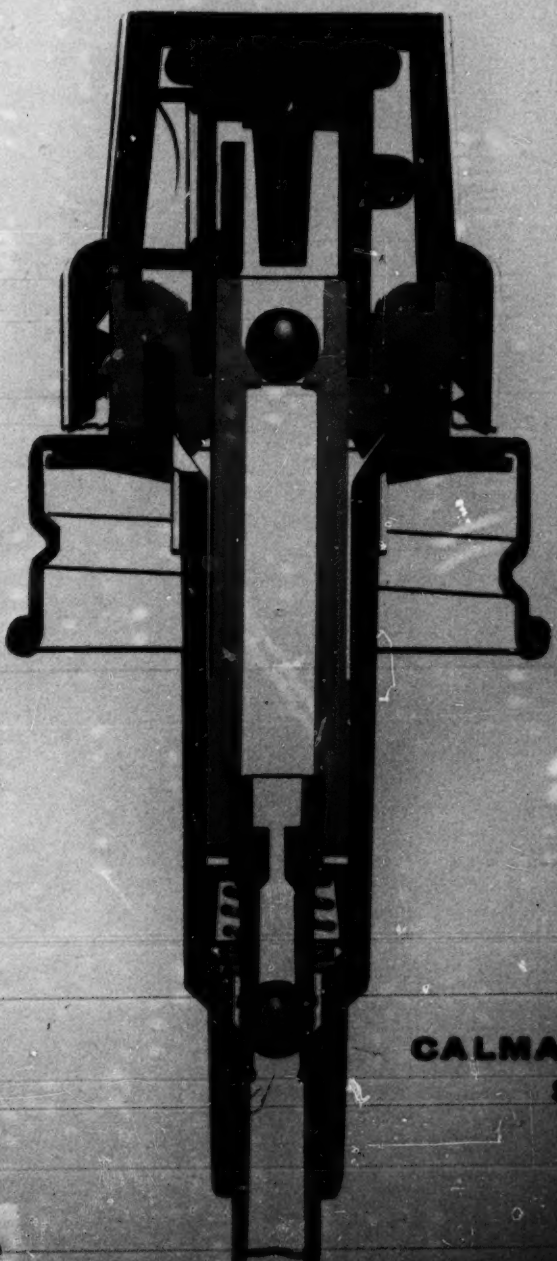


P-PP

PLAINTIFF'S EXHIBIT PP-a

413

PP(a)

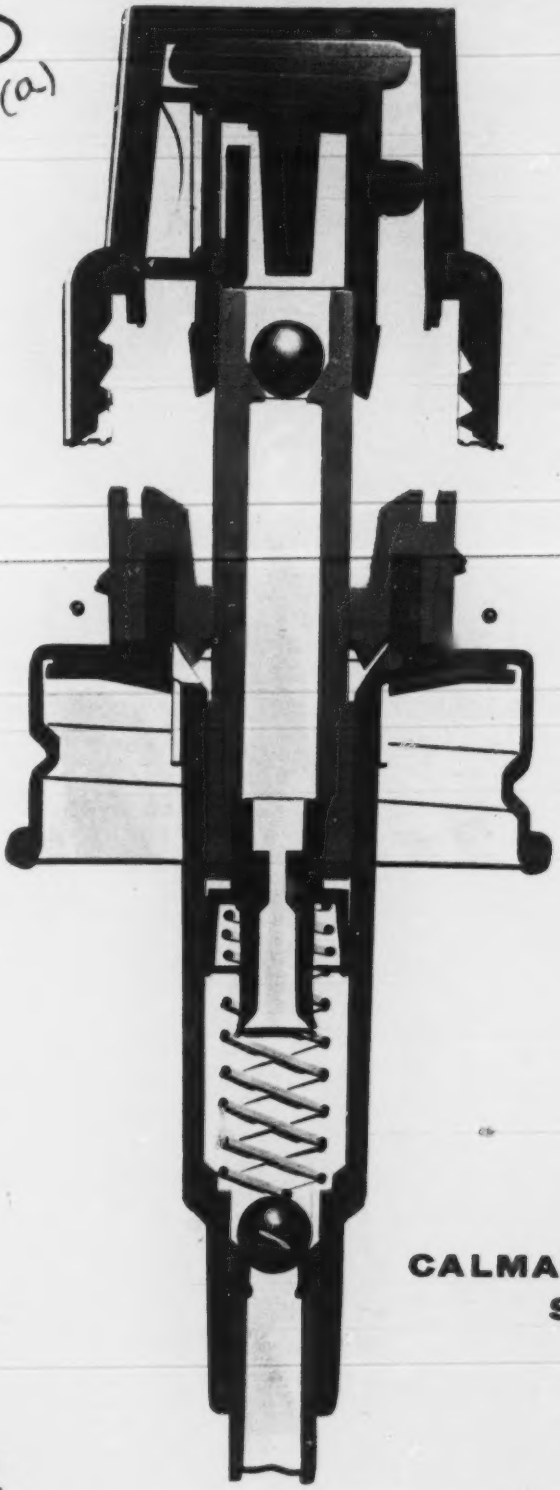

CALMAR
SS-40

P-PP(a)

PLAINTIFF'S EXHIBIT QQ

475

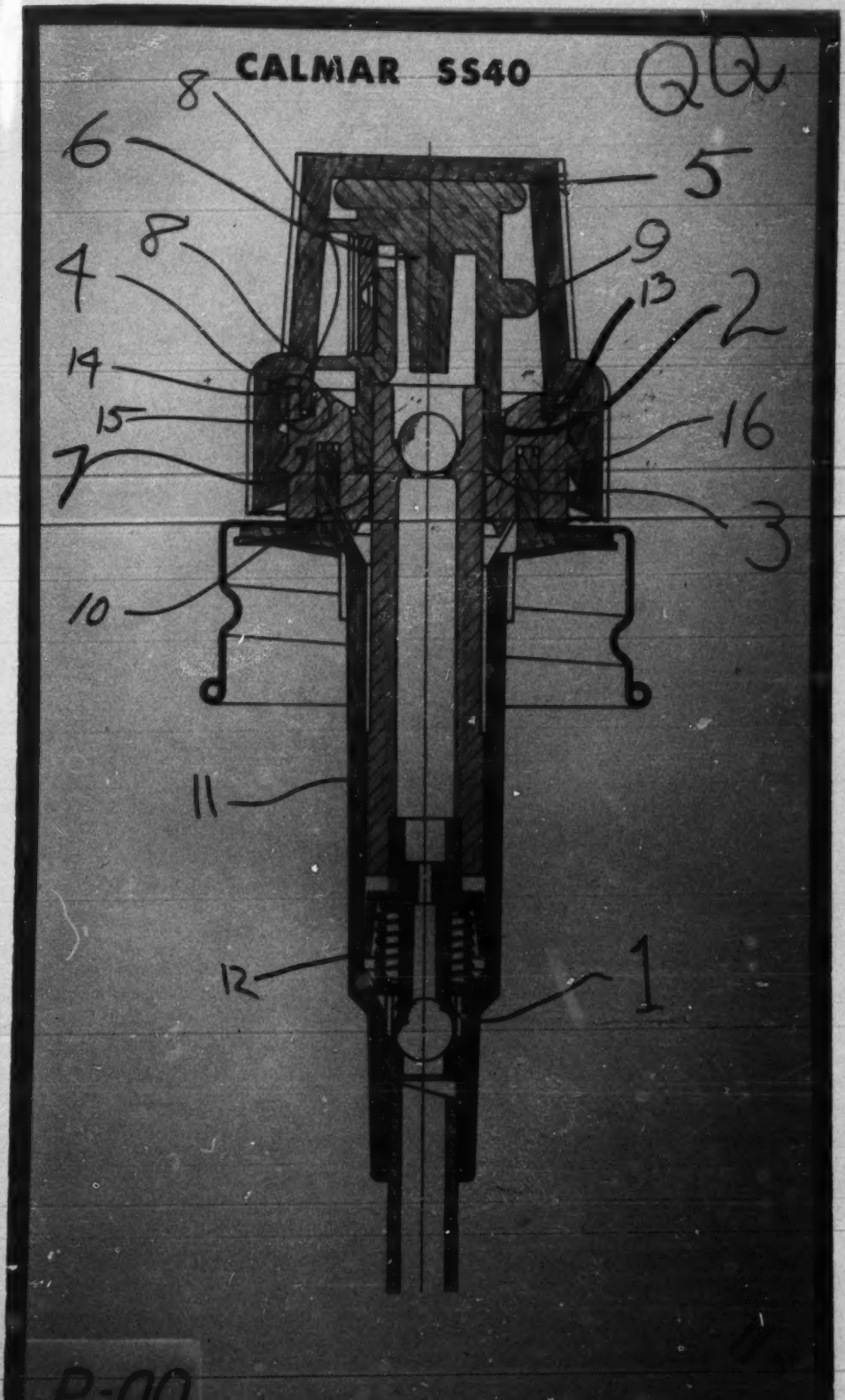

PLAINTIFF'S EXHIBIT VV

477

June 7, 1938. F. W. LOHSE 2,119,884

VV

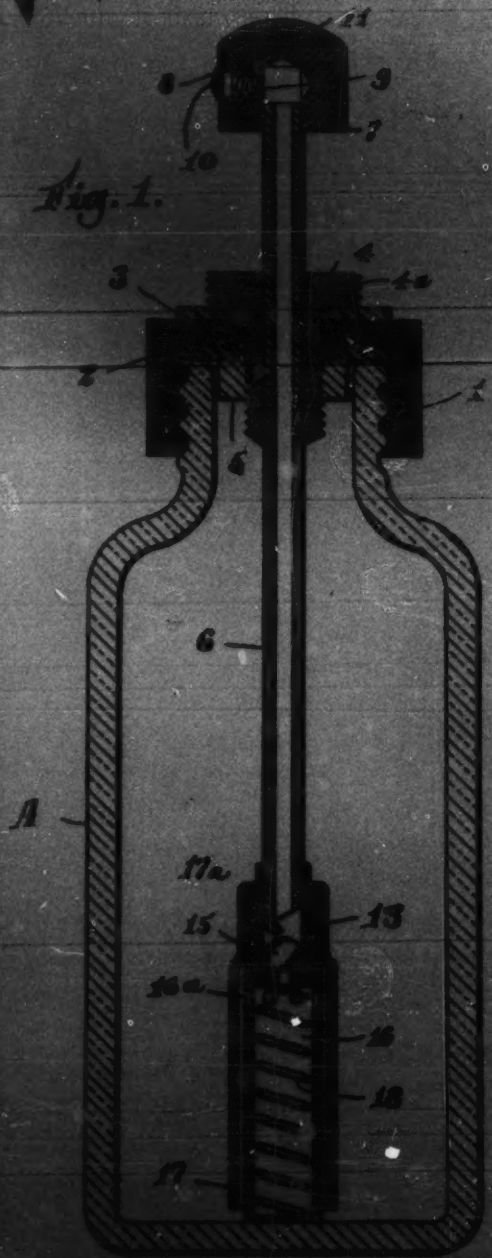


Fig. 1.

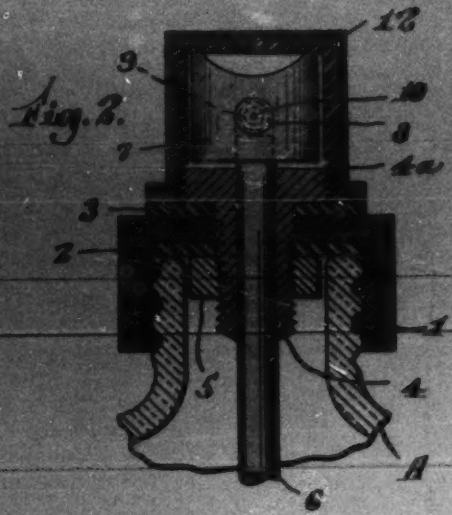


Fig. 2.

PLAINTIFF'S EXHIBIT YY

479

# CALMAR'S SS-40 SHIPPER SPRAYER

## General Specifications

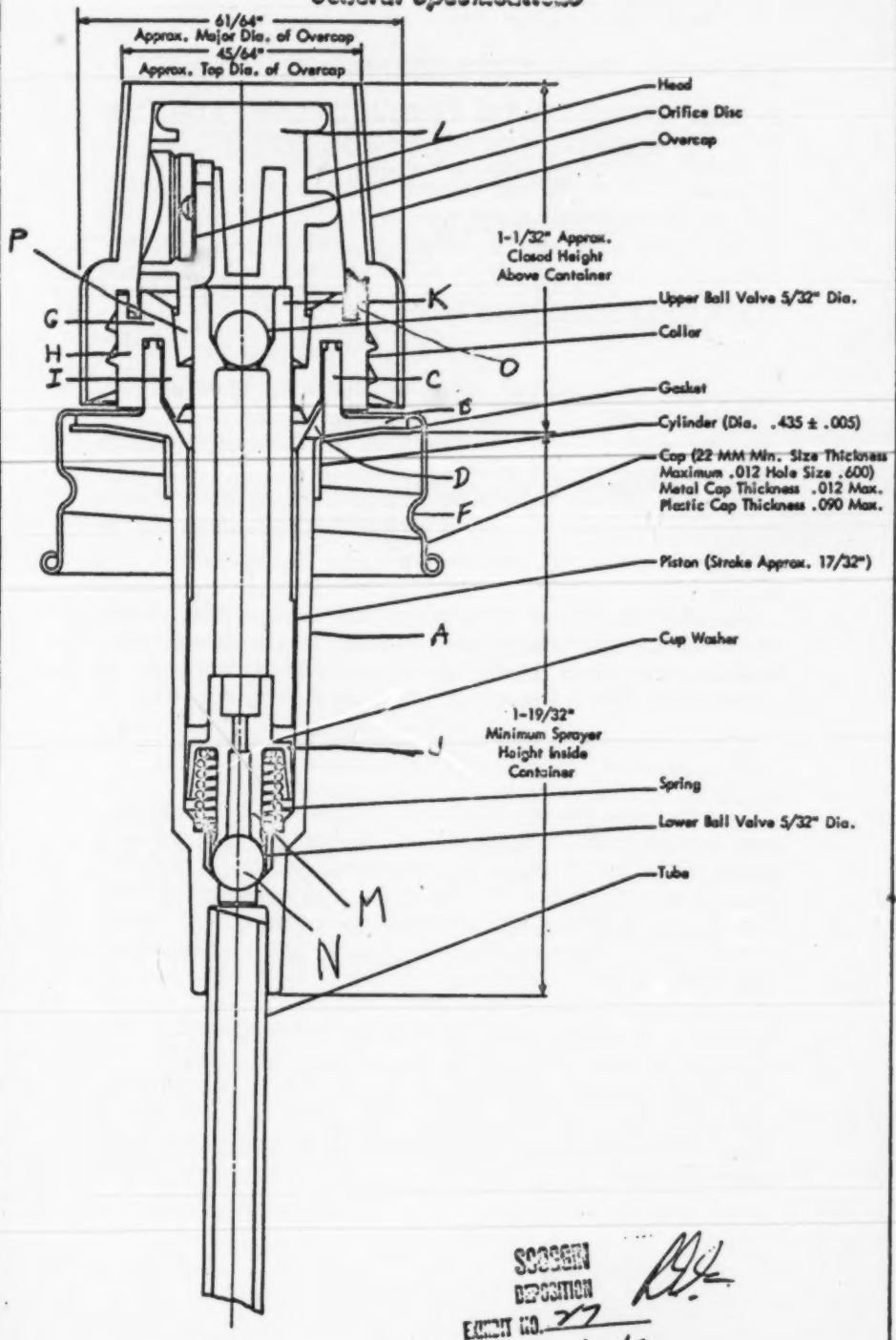


SCOGGIN
DEPOSITION
EXHIBIT NO. 77
11/17/59

480

[1151] PLAINTIFF'S EXHIBIT ZZ.

IN THE UNITED STATES DISTRICT COURT FOR THE
WESTERN DISTRICT OF MISSOURI
WESTERN DIVISION

CALMAR, INCORPORATED,
Plaintiff,
vs.
COOK CHEMICAL COMPANY,
Defendant.
No. 12,349

COLGATE-PALMOLIVE COMPANY,
Plaintiff,
vs.
COOK CHEMICAL COMPANY,
Defendant.
No. 13,006

STIPULATION

For the purpose of conserving time in the trial of the above actions, it is stipulated by the parties hereto that the following facts be considered established; the right of objection to the relevance of any such fact is reserved.

*With respect to pump type sprayers commercialized by Plaintiff*

1. Sprayers (called for convenience Calmar 1 Sprayers), constructed essentially as shown in the drawing marked Calmar 1 Sprayers, annexed hereto, designated respectively therein S-20 and S-15, and conforming with the sample sprayers (physical samples referred to herein are in the custody of Wm. H. Curtis, Esq.) marked respectively Calmar 1 S-20 and Calmar 1 S-15, were sold by Plaintiff to Defendant prior to 1956.

[1152] 2. Overcap and sprayer units (called Calmar SS-40 Sprayers), conforming with the sample units marked respectively Calmar SS-40 and Calmar SS-40 (sectioned), were sold by Plaintiff prior to the filing of Civil Action No. 12,349 and are the units charged to infringe the Scoggin patent in suit.

*With respect to pump type sprayers commercialized by Defendant*

1. Sprayers (called Bakan 1 Sprayers), constructed essentially as shown in the drawing marked Bakan 1 Sprayer, annexed hereto, and conforming with the sample sprayer marked Bakan 1, were made for and used by Defendant prior to 1957; a Bakan 1 sprayer constructed as shown in the drawing marked Bakan 1 was submitted to Injection Molding Company during August 1956 with a request for an estimate of the cost of applying a protective cap thereto.

2. Overcap and sprayer units (called Bakan 2 Sprayers), constructed essentially as shown in the drawing of the Scoggin patent in suit, marked Bakan 2 Sprayers, annexed hereto, and conforming with the sample units marked Bakan 2 and Bakan 2 (sectioned) were made for and used by Defendant in 1957.

3. Overcap and sprayer units (called Bakan 2 Sprayers Modified), conforming with the sample unit marked Bakan 2 (Modified) were made for and used by Defendant beginning as early as November 1959 and are the units described in the opening paragraph and in the immediately following numbered paragraphs 1, 2 and 3 of Scoggin Deposition Exhibit 67, annexed hereto.

4. Overcap and sprayer units (called Bakan 3 Sprayers), constructed essentially as shown in the drawing marked Bakan 3 [1153] Sprayer, annexed hereto, and conforming with the sample units marked respectively Bakan 3 and Bakan 3 (sectioned) were made for and used by Defendant beginning in 1960 and continuing thereafter and are the units to which reference is made in the last two sentences on page 1 of Scoggin Deposition Exhibit 67.

*With respect to pump type sprayers manufactured by Plaintiff's predecessor Calmar Company*

1. Devices (called Calmar Jetomizers), constructed essentially as shown in the patent to Turnbull et al 2,434,875, marked Calmar Jetomizer, annexed hereto, and conforming with the sample device marked Calmar Jetomizer, were sold by Calmar Company, predecessor of Plaintiff Calmar, Inc., prior to 1950.

*With respect to dispensers made and sold by others than Plaintiff and Defendant*

1. Adapters (called Pouring Spout and Cap Assemblies), conforming with the sample spout and cap units marked respectively Baker Spout and Baker Spout (sectioned), Baker Cap and Baker Cap (sectioned) were made for and used by the J. T. Baker Chemical Company of Phillipsburg, New Jersey, on containers for hydrofluoric acid of the type marked Baker Container, prior to 1956.

2. Sprayers (called Lohse Type Sprayers), conforming with the sample sprayer marked Lohse Type were made and sold by the T. J. Holmes Company of Chartley, Massachusetts prior to 1940.

*With respect to Scoggin Deposition Exhibit 67*

Scoggin Deposition Exhibit 67, the circular letter dated November 1959, annexed hereto, was distributed to customers of Bakan over the signature of and by authority of Jim Groebe, Senior Vice President of Bakan, on or about the date it bears.

[1154] It is further stipulated and agreed that depositions taken in the pre-trial discovery of either party need not be signed by the witnesses, as required by earlier stipulations herein.

/s/ W. H. Curtis
Morrison, Hecker, Cozad & Morrison
1701 Bryant Building (VI 2-5910)
Kansas City 6, Missouri
Attorneys for Plaintiff Calmar, Incorporated, in Action No. 12,349

/s/ Howard A. Crawford
Lathrop, Righter, Gordon & Parker
15 West Tenth Street (VI 2-0820)
Kansas City 5, Missouri
Attorneys for Plaintiff Colgate-Palmolive Company in Action No. 13,006

/s/ Gordon D. Schmidt
Hovey, Schmidt, Johnson & Hovey
1816 Federal Reserve Bank Building
Kansas City, Missouri
Attorneys for Defendant Cook Chemical Company in Actions Numbered 12,349 and 13,006

[1155] BAKAN PLASTICS

Division of Cook Chemical Company

P. O. Box 78 2500 Summit Kansas City 41, Missouri
Phone VIctor 2-8092

November, 1959

(Scoggin Deposition Exhibit No. 67.)

Re: Re-designed and Re-engineered Model 2 Leak Proof Sprayer

I am sure you will be interested in seeing our new leak proof sprayer equipped with a new cap and collar. This new cap and collar has the following advantages:

1. The cover cap can be tightened to a uniform torque at our plant—this eliminates extra cost for our customers.
2. This new cover cap is designed so that it makes a perfect seal on the collar—which the old one would not do.
3. This cover cap has more eye appeal—than the old one. This unit can be equipped with a cap 24mm or larger. We recommend that the customers should use a cap 26mm or larger, because the O. D. of the cover cap is larger than the O. D. on a 24mm, as an example. In other words, if the base cap has a smaller O. D. than the cover cap, it makes it impossible to tighten the metal cap unless they have a special capper.

We are now in production and all sprayers manufactured from now on will be equipped with this new cap and collar. Our engineering department is also re-designing and re-engineering the head mold, the orifice mold, and the plunger mold and we expect to have this work done by January 1st—possibly sooner. With this new development, we will be able to furnish you a completely leak proof sprayer, which will eliminate any leakage back into the cap.

[1156] We are mailing you the samples now, so that you can see how we are improving this unit, which will be a real

help to you. I might also add that this sprayer is covered by patent number 2,870,943.

Of course, our sales representative, the will be glad to answer any questions you may have regarding this unit.

Yours very truly,

BAKAN PLASTICS

/s/ Jim Groebe
Jim Groebe
Sr. Vice President

JG:lg

P.S.—Enclosed you will find catalog pages which illustrate both model 1 and model 2 sprayers—long and short stroke—which will give you prices on either unit. We are also enclosing samples of our model 1.

485-

# BAKAN
## MODEL 2 LEAKPROOF SPRAYER

### PRICES

| QUANTITY | PRICE PER THOUSAND |
|---|---|
| 1,000 | $84.00 per thousand |
| 5,000 | 81.00 per thousand |
| 10,000 | 79.00 per thousand |
| 25,000 | 77.00 per thousand |
| 50,000 | 76.00 per thousand |
| 100,000 and up | Annual Contract quoted on request |

### TERMS

TERMS: 1% 10 Days — Net 30
F.O.B. Kansas City, Missouri
MINIMUM ORDER: 1,000 Sprayers to case
CASE WEIGHT: 34 lbs.

### COLORS:

ALL WHITE or WHITE plunger with RED, BLUE, GREEN or YELLOW head and collar. Be sure to specify color when ordering.

Special color combinations available in quantities of 100,000 or more Prices quoted on request.

### CAPS:

Available in stock in following sizes and colors:

WHITE METAL—20, 22, 24, 26, 28, 33mm, 400 finish
BLUE METAL—26 & 28mm
YELLOW METAL—28mm
BLACK BAKELITE—24 & 28mm—$3.00/M extra
WHITE UREA—24 & 28mm—$6.00/M extra

Bakan can furnish metal or molded caps in any size or color in quantities of 100,000 or more. Prices quoted on request.

If customer furnishes molded caps, there will be a boring charge of $2.50/M.

### DIP TUBES:

Dip tubes will be cut to any desired length at no additional cost. When ordering specify over-all length from top of container to desired depth. Please submit sample bottle or container to insure accuracy.

NOTE: When ordering be sure to specify: Model Number, Cap size and color, Sprayer color, Dip Tube length, Plunger (standard or short).

MC 2 PLASTIC SPRAYER

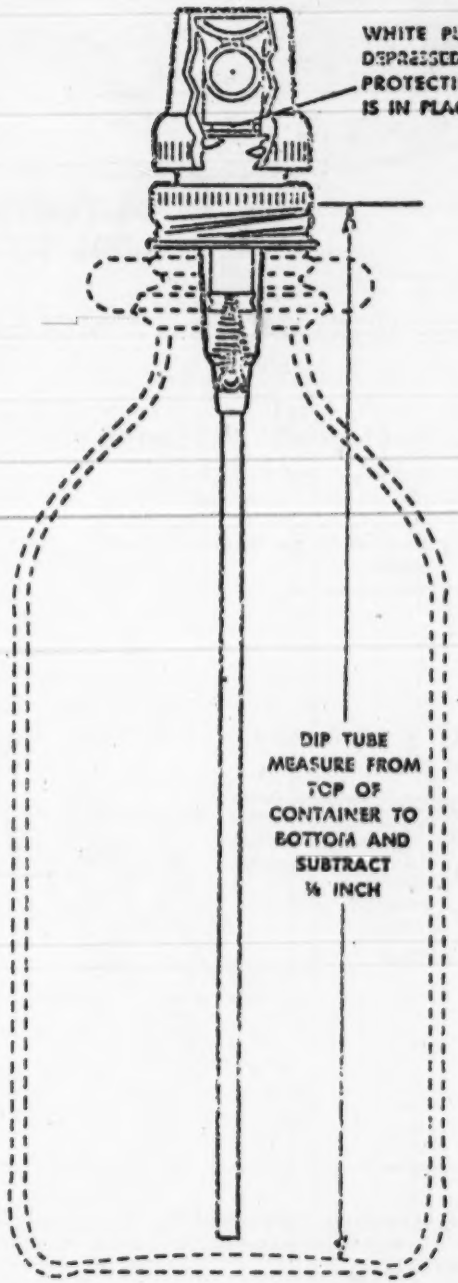


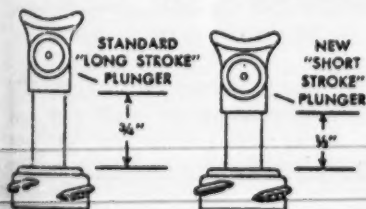


### NEW SHORT STROKE PLUNGER NOW AVAILABLE

Bakan sprayers may now be equipped with the new short stroke plunger which delivers less volume and is specifically designed for products such as window cleaners, spot removers, hair sprays, etc.

The standard, long stroke plunger is ideally suited for insecticides and other products where delivery of greater volume per stroke is desired.

When ordering specify short plunger if desired. Unless otherwise specified, sprayers will be equipped with standard, long stroke, plunger.

486

PRECISION MADE

# Sprayers and Dispensers

## DESIGNED FOR HIGH QUALITY, AT LOW COST! ADDS STYLE AND PERFORMANCE TO ANY PRODUCT

## THE BAKAN MODEL 1 PLASTIC SPRAYER...

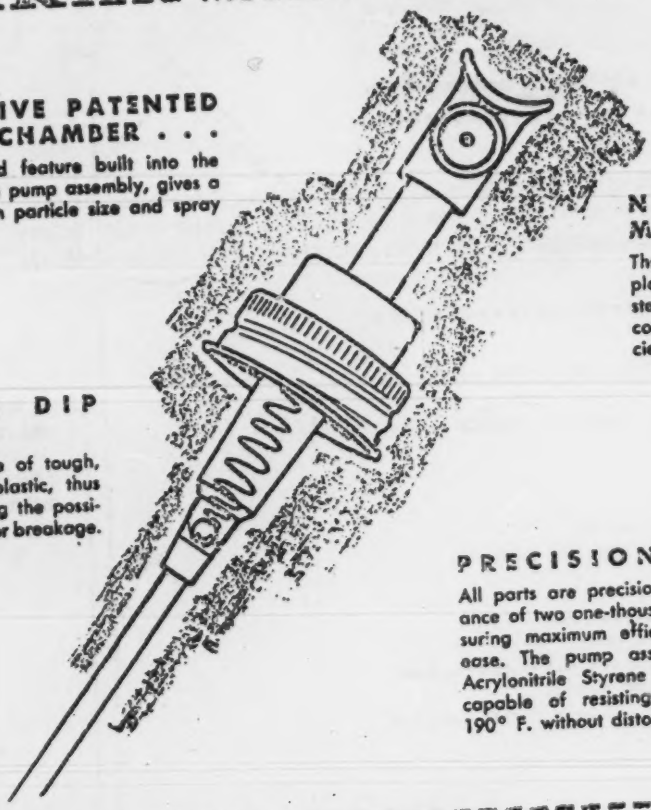

**EXCLUSIVE PATENTED SWIRL CHAMBER . . .**

This patented feature built into the high-pressure pump assembly, gives a more uniform particle size and spray pattern.

**NON CORROSIVE METAL PARTS...**

The sprayer contains two nickel-plated steel balls and a stainless steel spring, which eliminates corrosion and gives a more efficient, double-acting valve.

**PLIABLE DIP TUBE...**

The tube is made of tough, semi-rigid vinyl plastic, thus greatly eliminating the possibility of damage or breakage.

**PRECISION BUILT...**

All parts are precision molded to a tolerance of two one-thousandths of an inch, insuring maximum efficiency and operating ease. The pump assembly is molded of Acrylonitrile Styrene Copolymer (TYRIL) capable of resisting temperatures up to 190° F. without distortion.

---

The plastic components of the BAKAN Model 1 sprayer is compatible with most chemicals where sprayers are commonly used. It is suggested, however, that your product be thoroughly tested with the sprayers to make sure they are suitable for your product.

BAKAN offers your company specialized laboratory analysis and will develop and design special sprayers or dispensers to fit your product and package.

*distributed by:*

BAKAN Plastics 2300 SUMMIT, KANSAS CITY 41, MISSOU

487

# BAKAN

## MODEL 1 SPRAYER

### PRICES

| QUANTITY | PRICE PER THOUSAND |
|---|---|
| 1,000 | $74.00 per thousand |
| 5,000 | 71.00 per thousand |
| 10,000 | 69.00 per thousand |
| 25,000 | 67.00 per thousand |
| 50,000 | 66.00 per thousand |
| 100,000 and up | Annual Contract quoted on request |

### TERMS

TERMS: 1% 10 Days — Net 30
F.O.B. Kansas City, Missouri
MINIMUM ORDER: 1,000 Sprayers
PACKED: 1,000 Sprayers to case
CASE WEIGHT: 28 lbs.

### COLORS:

ALL WHITE or WHITE plunger with RED, BLUE, GREEN or YELLOW head and collar. Be sure to specify color when ordering.

Special color combinations available in quantities of 100,000 or more Prices quoted on request.

### CAPS:

Available in stock in following sizes and colors:

WHITE METAL—20, 22, 24, 26, 28, 33mm, 400 finish
BLUE METAL—26 & 28mm
YELLOW METAL—28mm
BLACK BAKELITE—24 & 28mm—$3.00/M extra
WHITE UREA—24 & 28mm—$6.00/M extra

Bakan can furnish metal or molded caps in any size or color in quantities of 100,000 or more. Prices quoted on request.

If customer furnishes molded caps, there will be a boring charge of $2.50/M.

### DIP TUBES:

Dip tubes will be cut to any desired length at no additional cost. When ordering specify over-all length from top of container to desired depth. Please submit sample bottle or container to insure accuracy.

NOTE: When ordering be sure to specify: Model Number, Cap size and color, Sprayer color, Dip Tube length, Plunger (standard or short).

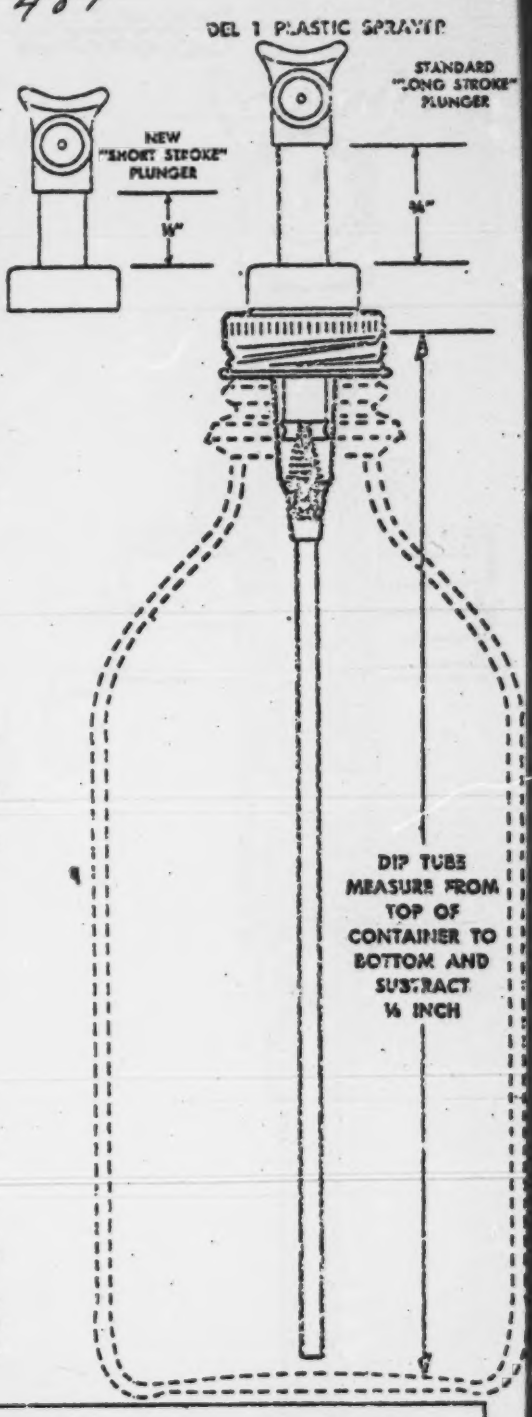


### NEW SHORT STROKE PLUNGER NOW AVAILABLE

Bakan sprayers may now be equipped with the new short stroke plunger which delivers less volume and is specifically designed for products such as window cleaners, spot removers, hair sprays, etc.

The standard, long stroke plunger is ideally suited for insecticides and other products where delivery of greater volume per stroke is desired.

When ordering specify short plunger if desired. Unless otherwise specified, sprayers will be equipped with standard, long stroke, plunger.

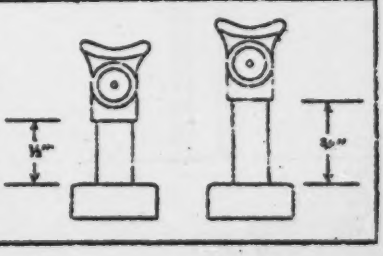

# Calmar I Sprayers

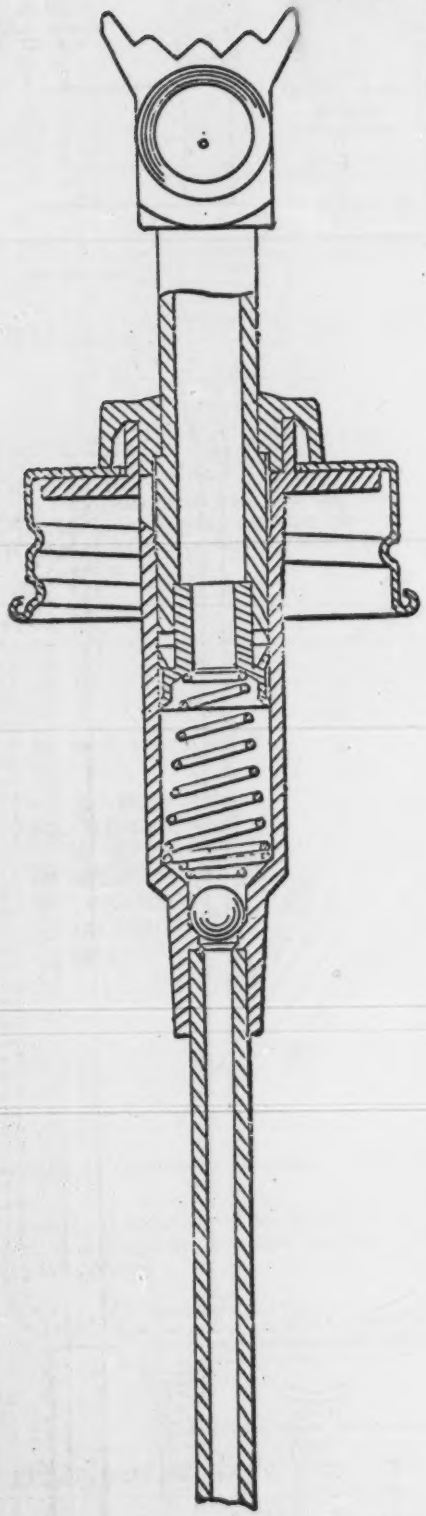

S 20

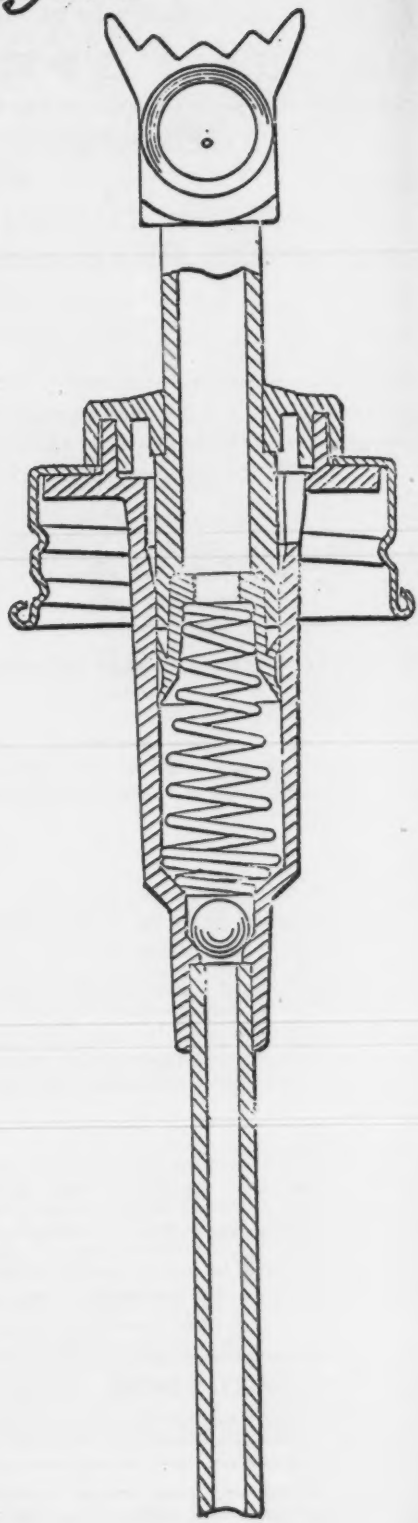

S 15

489

# Bakan 1 Sprayer

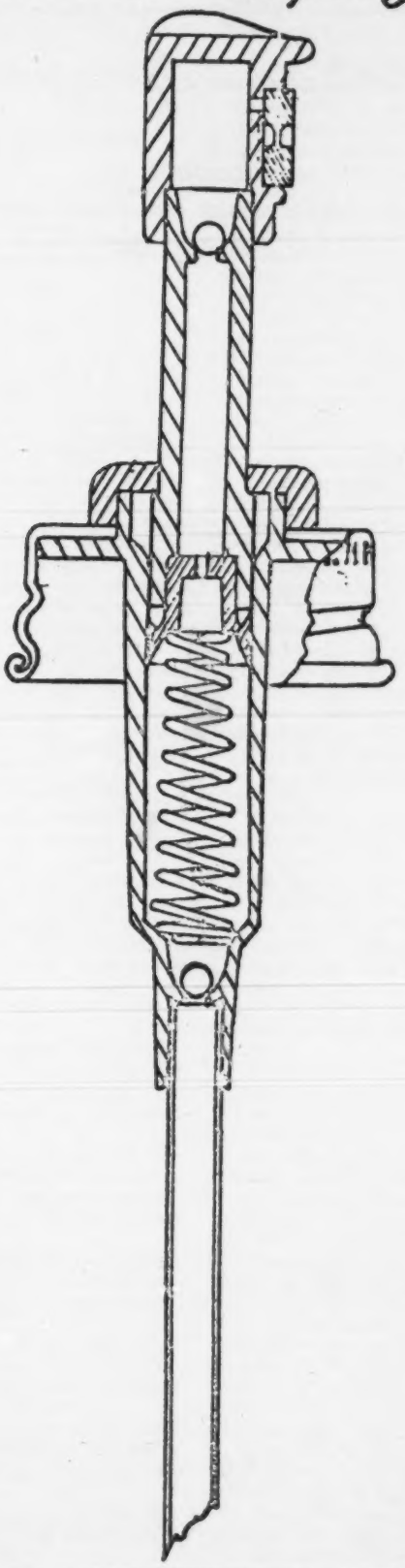

490

# Bahan 2 Sprayer

Jan. 27, 1959 B. I. SCOGGIN, JR 2,870,943

PUMP-TYPE LIQUID SPRAYER HAVING HOLD-DOWN CAP

Filed March 4, 1957

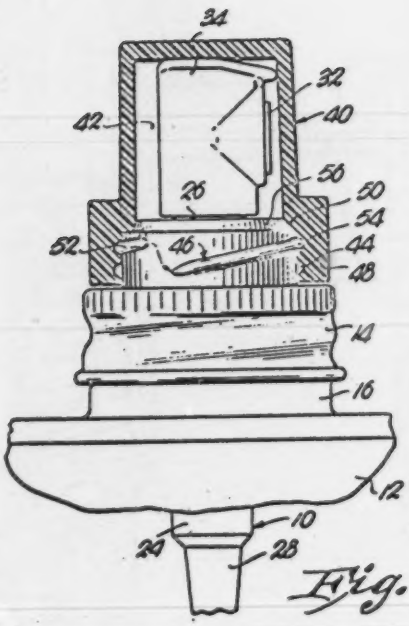


Fig. 1.

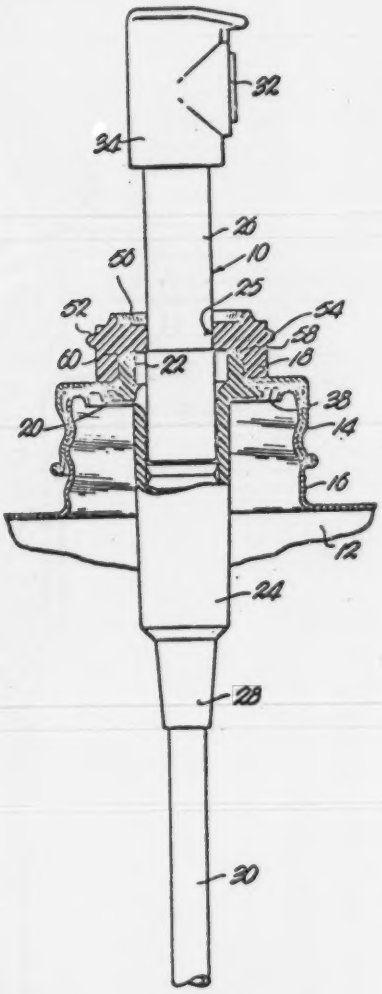


Fig. 2.

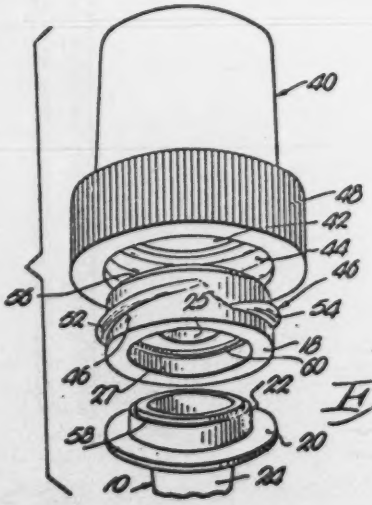


Fig. 3.

INVENTOR.
Baxter I. Scoggin
BY
ATTORNEY

United States Patent Office 2,870,943
491
Patented Jan. 27, 1959



2,870,943

# PUMP-TYPE LIQUID SPRAYER HAVING HOLD-DOWN CAP

Baxter I. Scoggin, Jr., Kansas City, Mo., assignor, by mesne assignments, to Cook Chemical Company, Kansas City, Mo., a corporation of Missouri

Application March 4, 1957, Serial No. 643,711

4 Claims. (Cl. 222—182)

This invention relates to improvements in structures for dispensing liquids wherein is provided a spray-type hand pump mounted within a container for the liquid through use of the closure cap of such container.

It is common practice, as exemplified for example by Patent No. 2,362,080, issued November 7, 1944, to dispense various types of liquids such as insecticides, through use of a finger-manipulated spray pump normally sold as a component part of the container itself. The pump includes a vertically reciprocable plunger extending upwardly beyond the top of the cap within which the pump is mounted and provided with a spray head or nozzle structure capable of emitting a fine mist-like spray when the plunger is depressed by engagement with a finger-receiving saddle forming a part of the spray head.

Difficulties have been experienced in the field by virtue of the inherent nature of such structure since accidental actuation of the plunger causes dispensing of the fluid and oftentimes the material is used in part by store employees prior to sale because of the ready accessibility to the pump itself.

It is the most important object of the present invention, therefore, to provide structure for rendering the pump inoperable during shipment and while in storage, as well as on the shelves of the retail dealer.

Another important object of the present invention is to provide structure capable of carrying out the functions above set forth which is also adapted to enclose the head of the plunger and thereby protect the same, as well as handlers of the merchandise by virtue of the fact that the said plunger is completely enclosed and held at the innermost end of its reciprocable path of travel.

A further object of the instant invention is to provide a hold-down cap that may be quickly and easily applied and removed by virtue of a releasable attachment to a part of the entire unit such as by use of screw-threaded interengagement therewith.

A further object of this invention is to provide improvements of the aforementioned character that advantageously employs a part of the unit which has a secondary function of attaching the barrel of the spray pump to the closure cap of the container.

Other objects include important details of construction to be made clear or become apparent as the following specification progresses, reference being had to the accompanying drawing, wherein:

Figure 1 is a fragmentary, elevational view of a liquid container showing a pump-type sprayer as a part thereof and including the novel hold-down cap of the instant invention, parts being in section for clearness.

Fig. 2 is a fragmentary, vertical, cross-sectional view through the container and its cap showing the pump assembly in its operable position with the hold-down cap removed; and

Fig. 3 is an exploded perspective view showing the hold-down cap and certain parts of the sprayer with which the same is operably associated.



Pump-type sprayer 10 for liquid container 12 is attached to cap 14 for retention thereby when cap 14 is removed from threaded neck 16 of container 12, and if desired, there may be provided sufficient clearance between cup-shaped retainer 18 and annular outturned flange 20 to permit rotation of cap 14 relative to sprayer 10.

Both cap or closure 14 and retainer 18 are received by a cylindrical extension 22 of frusto-conical barrel 24, forming a part of the sprayer 10, extension 22 being integral with flange 20 at the innermost edge of the latter. Flange 20 is integral with barrel 24 near the larger, uppermost edge of the latter and is held against the under side of gasket 38 in the cap 14 when the sprayer 10 is operably associated with container 12.

Retainer 18 is provided with a central opening 25 which receives tubular plunger 26 and has a cavity 27 that accommodates the enlarged extension 22 as is clear in Fig. 2. Retainer 18 is fitted tightly over the extension 22 and maintains the retainer in place with flange 20 against gasket 38 as above set forth.

Reduced end 28 of barrel 24 receives a tube 30 that extends to the bottom of container 12, it being understood that the sprayer 10 is internally constructed in a suitable manner as, for example, in accordance with teachings of the aforementioned patent to pump liquid from the container 12 into the tube 30 and thence through nozzle 32 forming a part of a spray head 34 secured to the uppermost end of plunger 26. The enlarged head 34 is normally depressed by one finger as the operator grasps the container 12 as is well understood in this art.

Cap 14 has a clearance opening therein, as best shown in Fig. 2, for the extension 22 of barrel 24 and when the cap 14 is in screw-threaded engagement with neck 16, the gasket 38 which surrounds barrel 24, is clamped tightly between flange 20 and the under side of the top of cap 14.

A hold-down member broadly designated by the numeral 40, is provided to hold the plunger 26 at the lowermost end of its path of travel within the barrel 24 in the manner illustrated by Fig. 1, it being understood as by reference to said patent, that a spring (not shown) within the barrel 24, yieldably biases the plunger 26 upwardly to the position shown in Fig. 2. The hold-down member 40 is preferably in the nature of a hollow cap so that the same not only encloses or houses the upper end of plunger 26, i. e. spray head 34, but releasably attaches to the retainer 18 and also houses the latter.

A cylindrical bore 42 within the hold-down cap 40 receives the head 34 as seen in Fig. 1, and enlargement of the bore 42 adjacent the lowermost open end of the cap 40 is provided with internal screw threads 44 that mesh with external screw threads 46 on the retainer 18, thereby releasably attaching the cap 40 to the retainer 18.

An enlarged, annular boss 48 on the cap 40 is provided with a ribbed, outermost surface to facilitate mounting and removal of the cap 40 relative to retainer 18. A downwardly-facing shoulder 50 within the cap 40 engages the upper surface of retainer 18, thereby preventing engagement between cap 40 and closure 14 to prevent forcing of the retainer 18 from its tight press-fit engagement with extension 22. As illustrated, the screw threads 46 on the retainer 18 are in the nature of a pair of substantially semi-circular, spirally arranged sections 52 and 54, permitting molding of the retainer 18 with its screw threads 46 as a single unitary part.

In addition to the seal provided between shoulder 50 and the top surface of retainer 18, there is established an additional annular seal between annular rib 56 and the annular surface of cap 40 immediately adjacent to shoulder 50. This seal is clearly illustrated in Figure 1. The cross-sectional contour of rib 56 is as shown

492





in Fig. 2 to present an upwardly and inwardly inclined annular face which snugly fits against the "corner" or line of juncture between shoulder 50 and the adjacent annular inner face of cap 40.

The interfitting surfaces between extension 22 and retainer 18 are as illustrated in Fig. 2. There is an annular notch formed in extension 22 at the outer extremity thereof and this notch 58 receives a similarly formed, continuous annular projection 60 formed integrally with retainer 18 and at a point where elements 58 and 60 will interlock when the parts are in assembled condition.

Thus, any accidental leakage or seepage from container 12 through the parts after they are assembled is obviated.

The material from which retainer 18 is produced is soft enough to be slightly compressed when shoulder 50 and the corner adjacent thereto, rides along the upwardly and inwardly inclined outer face of rib 56 when cap 40 is moved to position.

Having thus described the invention what is claimed as new and desired to be secured by Letters Patent is:

1. In a closure assembly for an open-top container having a perforated cap over said open top thereof mounting a spray unit including a barrel provided with a tubular extension passing coaxially upwardly through the perforation in said cap, a plunger reciprocably carried by the barrel and normally extending therebeyond and a spray head on the upper end of the plunger above said extension, the combination with said spray unit of an annular retainer telescoped over and secured to the extension above said cap and provided with external, circumferentially disposed screw threads and an annular, continuous segment at the upper part of the retainer above said screw threads, and a cup-shaped hold-down member housing the head and holding the plunger depressed at substantially the innermost path of travel thereof within the barrel, said member being provided with internal screw threads complementally engaging said screw threads on the retainer and having an internal, circumferentially extending, continuous shoulder disposed to engage said segment around the entire periphery thereof and thereby present a liquid-tight seal located between the spray head and said threads on the retainer and said member respectively, said shoulder being spaced from the lower annular peripheral edge of the member a distance at least slightly less than the distance from that portion of said segment normally engaged by said shoulder, to the proximal upper surface of the cap whereby said lower edge of the member is maintained out of contacting relationship with the cap when the member is on the retainer in a position with said shoulder in tight sealing engagement with the segment.



2. A closure assembly as set forth in claim 1 wherein one of the normally interengaged surfaces of the shoulder and segment respectively is substantially conical to present an inclined annular face coaxial with the member and said retainer and of sufficient diameter at the largest end thereof to cause the seal effected between the shoulder and said segment to become tighter as the shoulder slides on said segment during shifting of the member toward the cap.

3. A closure assembly as set forth in claim 2 wherein said retainer is provided with a continuous, annular rib integral with the normally upper edge thereof and defining said segment, said rib having an outwardly facing, inclined surface presenting said conical face and of greatest external diameter at the zone of juncture of the rib with the retainer, said member having a pair of inner, coaxial, longitudinally spaced, cylindrical surfaces, the innermost cylindrical surface having a smaller diameter than the outermost cylindrical surface and presenting said shoulder therebetween lying in a plane perpendicular to the axes of said cylindrical surfaces, the diameter of said innermost cylindrical surface of the member being intermediate the diameters of opposed external end margins of said rib.

4. A closure assembly as set forth in claim 3 wherein the member and retainer are constructed of materials having different coefficients of hardness whereby one of the interengaged faces of the rib and said shoulder respectively is deformed as the member is shifted toward the cap to thereby produce a more effective seal therebetween.


References Cited in the file of this patent

UNITED STATES PATENTS

| | | |
|---|---|---|
| 1,447,712 | Cohen | Mar. 6, 1923 |
| 2,118,222 | Nilson | May 24, 1938 |
| 2,119,884 | Lohse | June 7, 1938 |
| 2,586,687 | Mellon | Feb. 19, 1952 |
| 2,844,290 | Slade | July 22, 1958 |

493

Bakan 3 Sprayer

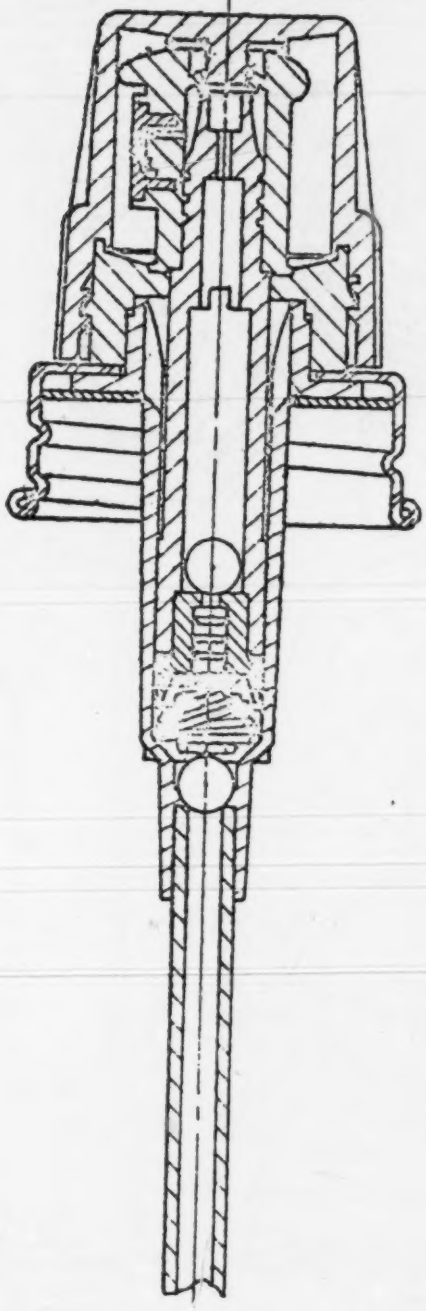

494

# Calmar Jetomizer

Jan. 20, 1948. F. M. TURNBULL ET AL 2,434,875

JETTING DEVICE

Filed Aug. 11, 1945 2 Sheets-Sheet 1

Fig. 1.

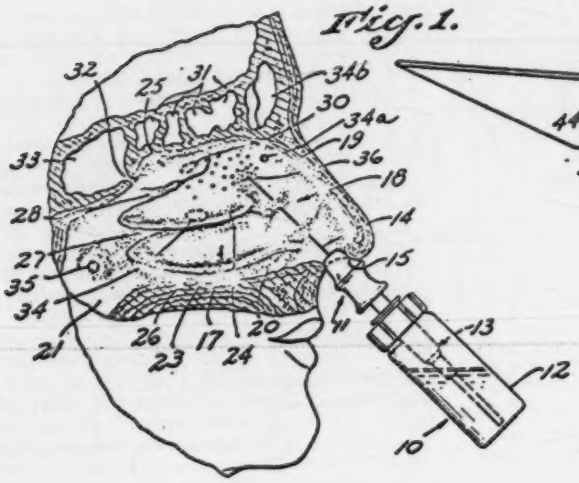


Fig. 2.

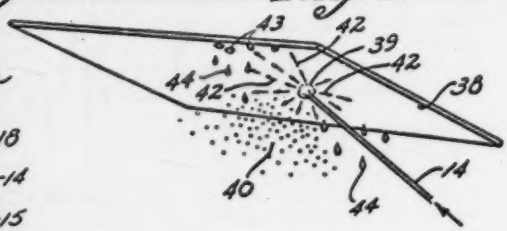


Fig. 3.

Fig. 4.

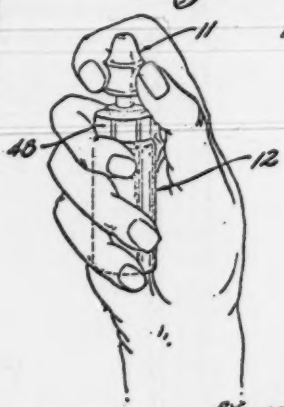


Fig. 5.

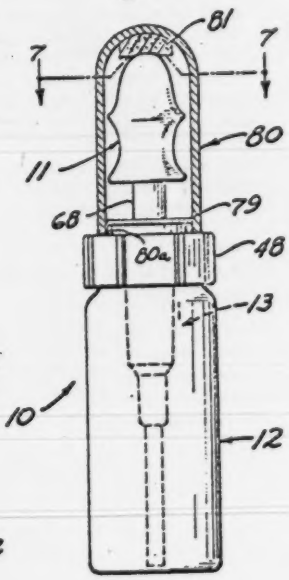


INVENTORS:
FREDERICK M. TURNBULL,
WILLIAM F. HAMILTON.
BY HARRIS, KIECH, FOSTER & HARRIS,

Clarence F. Kiech

FOR THE FIRM
ATTORNEYS.

495

Jan. 20, 1948. F. M. TURNBULL ET AL 2,434,875

JETTING DEVICE

Filed Aug. 11, 1945 2 Sheets-Sheet 2

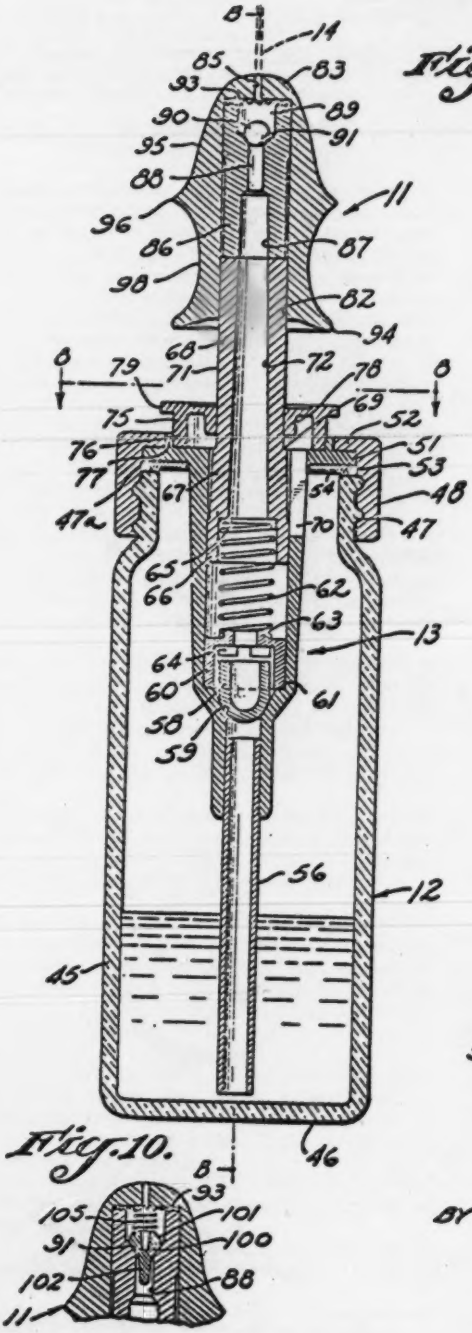


Fig. 6.

Fig. 7.

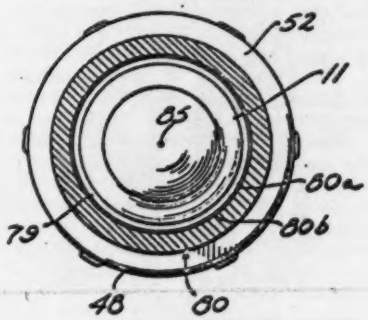


Fig. 8.

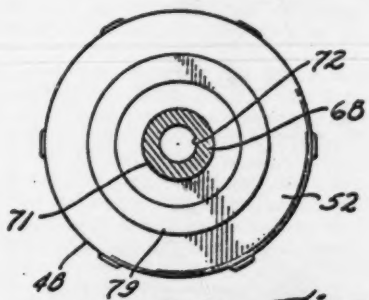


Fig. 9.

Fig. 10.

INVENTORS:
FREDERICK M. TURNBULL,
WILLIAM F. HAMILTON,
BY HARRIS, KIECH, FOSTER & HARRIS,

Clarence F. Kiech

FOR THE FIRM
ATTORNEYS.

PLAINTIFF'S EXHIBIT AB

496

Nov. 20, 1962 B. I. SCOGGIN, JR., ETAL 3,064,865

SPRAYER HEAD HAVING IMPROVED SEALING AND DISCHARGING MEANS

Filed Aug. 24, 1959

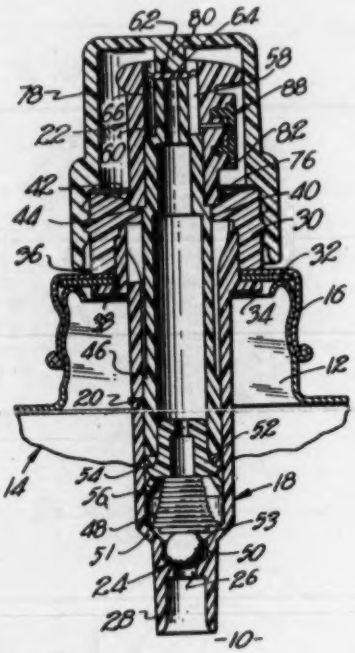


Fig. 1.

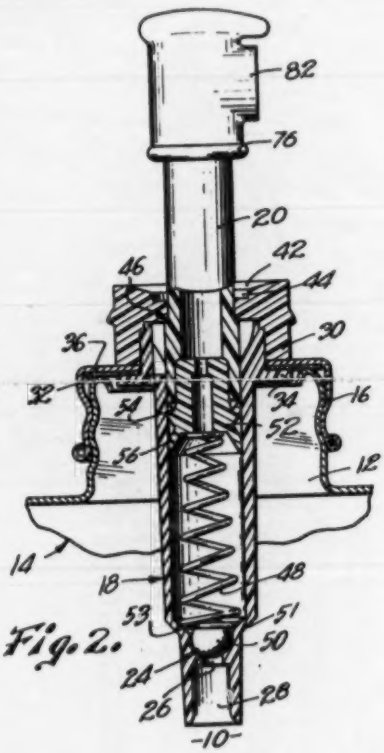


Fig. 2.

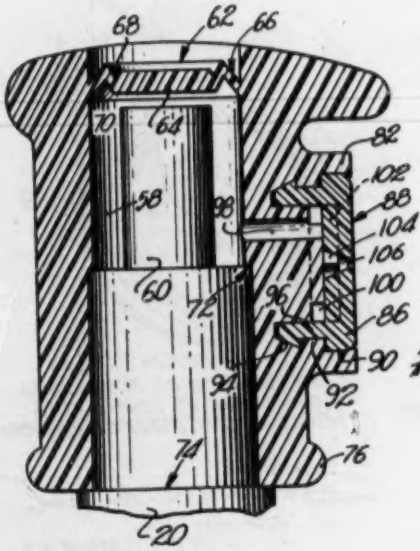


Fig. 3.

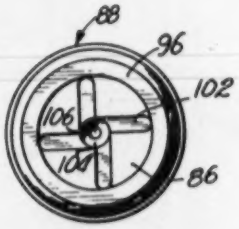


Fig. 4.

INVENTORS.
Baxter I. Scoggin Jr.
BY Woodrow E. Vaughan

Harvey, Schmidt, Johnson & Harvey
ATTORNEYS.

United States Patent Office 3,064,865 Patented Nov. 20, 1962



# 3,064,865
# SPRAYER HEAD HAVING IMPROVED SEALING AND DISCHARGING MEANS

Baxter I. Scoggin, Jr., Kansas City, and Woodrow E. Vaughan, Independence, Mo., assignors to Cook Chemical Company, Kansas City, Mo., a corporation of Missouri

Filed Aug. 24, 1959, Ser. No. 835,680
8 Claims. (Cl. 222—321)

This invention relates to improvements in pumps or sprayers and particularly to that class of spraying attachments for containers commonly employed for example, in the dispensing of insecticides and other fluids, the primary object being to eliminate leakage problems when the pump or sprayer is not in use. Hand pumps of the kind used in small containers and utilizing a spring-loaded reciprocable plunger are prone to leak while in storage, and although the discharge head of the sprayer may be held depressed and enclosed within a cap, such improvement of itself does not prevent leakage into the cap.

It is the most important object of the present invention, therefore, to provide a valve that blocks the normal flow of the fluid to the outlet orifice of the discharge head whenever the plunger is held depressed at the inner end of its path of travel.

Another important object of the present invention is to provide a diaphragm valve in the nature of a flexible membrane that may be held closed while the pump plunger is depressed through use of a hold-down member that of itself, need not either house the discharge head or operate as a sealing means.

Another important object of the present invention is to eliminate leakage from between the plunger and the barrel of the pump within which the plunger is reciprocably mounted through the medium of a seal between the discharge head and the barrel that is likewise held in a sealing condition by the hold-down member aforementioned.

Another object of the present invention is to provide in the aforementioned diaphragm valve, a special construction permitting flexing without stretching of the material from which the membrane is made.

Another object of the present invention is to provide a control nozzle for the discharge head of the pump that has novel interlocking means with the head, as well as a unique arrangement for utilizing the fluid pressure itself as the means for sealing the nozzle with respect to the head, eliminating the necessity of using adhesive to hold the nozzle in place.

In the drawing:

FIG. 1 is a vertical, cross-sectional view of a pump provided with a sprayer head having improved sealing and discharging means made pursuant to my present invention, the container within which the pump is mounted being illustrated fragmentarily.

FIG. 2 is a view similar to FIG. 1 but with the hold-down member removed and the plunger disposed at the outer end of its path of travel.

FIG. 3 is an enlarged, fragmentary view showing the head in section and the outer end of the plunger in elevation; and

FIG. 4 is an inside view of the nozzle prior to mounting the same on the head.

A pump, broadly designated by the numeral **10**, is shown in FIGS. 1 and 2 attached to neck **12** of a fluid container **14**. The connection is releasable by virtue of the fact that pump **10** is attached to a cap **16** which is in turn screw-threaded onto the neck **12**.

Pump **10** includes a barrel **18**, a spring-loaded plunger **20** reciprocable in barrel **18**, and a discharge head **22** on the outer end of the plunger **20**. Barrel **18** progressively



decreases in diameter as a valve seat **24** is approached, seat **24** being within the barrel **18** near the inner end of the latter and being juxtaposed to a restricted opening **26** in barrel **18**. A tube (not shown) leading to the bottom of the container **14** is fitted into recess **28** at the inner end of barrel **18**, and such tube, therefore communicates with the opening **26**.

A retention member **30** forming a part of the barrel **18**, clamps a gasket **32** against the upper end of neck **12** and against an outwardly extending flange **34** integral with the barrel **18** therearound. It also clamps top face **36** of cap **16** against flange **34**.

Barrel **18** extends through an opening **38** in the top **36** of cap **16** and through the washer-type gasket **32**. The member **30** is press-fitted or otherwise tightly affixed to the barrel **18** to become a part thereof, and is provided with a central opening **40** within which the plunger **20** reciprocates. The outer face of the member **30** has a dish-shaped recess **42** terminating in a socket **44**, both of which surround the plunger, socket **44** having an annular, transversely sloping side wall as seen in FIG. 2.

Plunger **20** provides a tubular passage for fluid and is provided with an outwardly-facing shoulder **46** that engages member **30** as shown in FIG. 2, to limit the extent of outward movement of plunger **20** under influence of spring **48** that is housed within barrel **18** between plunger **20** and a spherical check valve **50** engageable with seat **24**. Spring **48** rests on wall **51** of barrel **18**, not on valve **50**, the inner convolution **53** of spring **48** limiting the extent of movement of floating valve **50** away from seat **24**. A tubular plug **52** attached to plunger **20** and extending into the inner end of the latter, receives the proximal end of the spring **48** and is provided with oppositely flaring, flexible wings **54** and **56** therearound that are in wiping engagement with the inner face of barrel **18**.

Head **22**, that is finger-actuated during use of the pump **10** to reciprocate the plunger **20**, is telescoped over the outer end of the plunger **20** and provided with a bore **58** therethrough that is appreciably larger in diameter than the outside diameter of a tubular reduced end portion **60** of the plunger **20** whereby the bore **58**, adjacent the portion **60**, is adapted to receive fluid from the plunger **20** when diaphragm **62** is unseated, as illustrated in FIG. 3.

The diaphragm **62** is in the nature of a thin membrane that partitions or closes off the upper end of the bore **58** and is preferably made as an integral part of the head **22**. Diaphragm valve **62** has a central disc-like portion **64** that is adapted to engage the outer end of the portion **60** of plunger **20** to block flow of fluid from plunger **20** to bore **58** as illustrated in FIG. 1.

To the end that the diaphragm **62** may be flexed toward and away from the proximal end of plunger **20** without stretching the material from which diaphragm **62** is made, there is provided an annulus **66** that is transversely undulated. Annulus **66**, which integrally interconnects the inner wall of head **22** that defines bore **58** with the portion **64** therearound, normally has substantially the shape of an inverted V, although if desired, the transverse shape of the annulus **66** might well be that of an upright V.

To this end, an outwardly-facing, annular, transversely V-shaped groove **68**, and a similarly shaped, inwardly-facing groove **70** are formed in the diaphragm **62**.

The distance between the outer end of plunger **20** and the diaphragm portion **64** when the latter is in its normal position as shown in FIG. 3, is determined by interengaging shoulders **72** between the head **22** and the plunger **20** and by the inner end of head **22** engaging shoulder **74** on plunger **20**. The said inner end of head **22** also seats against the bottom wall of socket **44** when the plunger **20** is depressed, as shown in FIG. 1. Further sealing at this point is provided by a bead **76** integral with head **22** at its innermost end in surrounding relationship thereto. The

bead 76 which is substantially semi-circular transversely thereof, also fits within the socket 44 rather tightly, deforming the flexible material from which the member 30 and the head 22 are made (see FIG. 1). The action is similar in nature therefore, to that provided by an O-ring seal.

Releasable means in the nature of a hold-down member 78 is attached to barrel 18 and particularly to the portion 30 thereof in any suitable manner such as by intermeshing screw threads as illustrated. While the member 78 chosen for illustration, is cup-shaped so as to enclose the head 22, such enclosure is not necessary and, therefore, the hold-down member 78 may take any desired form. However, it is necessary that the member 78 not only maintain the plunger 20 depressed, but that it maintain the parts 44—76 tightly sealed. Still further, the member 78 serves to deflect the diaphragm valve 62 and press the portion 64 thereof against the proximal end of plunger portion 60 by virtue of a pressure ear 80 integral with the top wall of member 78 and depending therefrom. Note in FIG. 1 that the ear 80 enters the bore 58 and engages the diaphragm portion 64 when the member 78 is attached to the portion 30 of barrel 18.

A laterally extending boss 82 on the head 22 is provided with a shallow, outwardly-facing cavity receiving a plate portion 86 of a discharge nozzle 88. The side wall of boss 82 defining the cavity therein is provided with an annular groove 90 surrounding the plate portion 86 and into which the latter is snap-fitted.

An inturned, annular rib 92 within the boss 82 separates the groove 90 from a dovetail-type of annular groove 94 within boss 82. An inwardly-extending band 96 integral with plate 86 complementally receives the rib 92 and is received by the groove 94 again by a snap-fit because of the resilient nature of the material from which head 22 and nozzle 88 are made.

Head 22 has an outlet port 98 placing the cavity of boss 82 into communication with bore 58, and particularly with an annular chamber 100 in boss 82 that is surrounded by the band 96 and covered by plate 86. The chamber 100 registers directly with a plurality of passages 102 in the inner face of plate 86 that are tangential to the band 96 and to a frusto-conical outlet aperture 104 in the plate 86 that terminates in a cylindrical hole 106.

When the pump 10 is to be placed in use, the hold-down member 78 is removed, whereupon an operator may reciprocate the plunger 20 in cooperation with spring 48 to force fluid such as a liquid insecticide, from the container 14, through the aperture 104. It is obvious that the valve 50 rises from seal 24 to admit the liquid into the plunger 20 when the latter is depressed, and bears against seat 24 to prevent passage of liquid back into container 14 when spring 48 forces plunger 20 to the position shown in FIG. 2, causing the liquid to flow into bore 58.

The fluid passes from the bore 58 and thence to the port 98 where it is equalized within the chamber 100 and flows to all of the passages 102 for discharge in an atomized uniform spray from the terminal end 106 of aperture 104. The pressure of the fluid within the chamber 100 acts radially outwardly on the band 96 of nozzle means 88 to press the band 96 tightly against the rib 92. Any fluid that tends to move inwardly in chamber 100, away from plate 86 along the band 96, also tends to hold the latter tightly within the groove 94. This action seals the member 88 and prevents leakage.

When the pump 10 is not in use, the member 78 is placed on the part 30 of barrel 18 and in so doing, there is a sealing action not only between the valve 62 and the portion 60 of plunger 20, but a sealing action between the bead 76 and the member 30 in socket 44.

Accordingly, the fluid cannot leak to the outside of the container 14 either from the outer end of plunger 20 or from between barrel portion 30 and plunger 20 at the opening 40. Furthermore, the member 78 prevents accidental reciprocation of plunger 20 and, therefore, discharge of the fluid during storage, shipment or other non-use of the pump 10.



This is a continuation-in-part of our copending application Serial No. 789,902, filed January 29, 1959, now abandoned.

Having thus described the invention what is claimed as new and desired to be secured by Letters Patent is:

1. In a fluid handling assembly, the combination of:
(*a*) a hollow pump barrel;
(*b*) member on the barrel;
(*c*) a plunger having conduit means therethrough, reciprocable in the barrel and extending through the member;
(*d*) a head mounted on the plunger above said member provided with a bore communicating with the conduit means of said plunger;
(*e*) a shiftable, biased, flexible diaphragm secured to the head and closing the normally uppermost end of the bore, the upper end of said plunger being open, being disposed within the bore, and being spaced below the diaphragm when the latter is in the normal position thereof permitting free flow of fluid into the bore through said open end of the plunger, said head having a fluid outlet port communicating with said bore;
(*f*) means on the plunger within the barrel for pumping fluid into the barrel, through the plunger, into said bore, and thense through said port upon reciprocation of the plunger;
(*g*) a hold-down elememt releasably attached to the member and having a top overylying the head when the element is attached to the member; and
(*h*) an ear depending from said top and against the diaphragm, holding the latter in a shifted position opposed to the bias and against said upper end of the plunger in complete fluid closing relationship therewith only when the element is attached to the member.

2. In a fluid handling assembly, the combination of:
(*a*) a hollow pump barrel;
(*b*) a member on the barrel;
(*c*) a plunger having conduit means therethrough, reciprocable in the barrel and extending through the member;
(*d*) a head above said member and provided with a bore;
(*e*) a shiftable, biased, flexible diphragm secured to the head and closing the normally uppermost end of the bore, said plunger extending into the opposite end of the bore and having a terminal portion within the bore of reduced outside diameter, presenting a space in the bore surrounding said portion, the upper end of said terminal portion being open and spaced below the diaprhagm when the latter is in the normal postion therof permitting free flow of fluid into the bore through said open end of the plunger, said head having a fluid outlet port communicating with said space;
(*f*) means on the plunger within the barrel for pumping fluid into the barrel, through the plunger, into said space, and thence through said port upon reciprocation of the plunger;
(*g*) a hold-down element releasably attached to the member and having a top wall overlying the head when the element is attached to the member; and
(*h*) an ear depending from said wall and against the diaphragm, holding the latter in a shifted position against said upper end of said terminal portion of the plunger in complete fluid closing relationship therewith only when the element is attached to the member.

3. In fluid handling assembly, the combination of:
(*a*) a hollow pump barrel;
(*b*) a member on the barrel;

(c) a plunger having conduit means therethrough, reciprocable in the barrel and extending through the member;

(d) a head above said member and provided with a bore;

(e) a shiftable, biased, flexible, generally flat diaphragm secured to the head and closing the normally uppermost end of the bore, said plunger being tightly fitted into the opposite end of the bore coaxially therewith and having a terminal portion within the bore of reduced outside diameter, presenting a space in the bore surrounding said portion, the upper end of said terminal portion being open and spaced below the diaphragm when the latter is in the normal position thereof permitting free flow of fluid into the bore through said open end of the plunger, said head having a fluid outlet port communicating with said space;

(f) means on the plunger within the barrel for pumping fluid into the barrel, through the plunger, into said space, and thence through said port upon reciprocation of the plunger;

(g) a hold-down element releasably attached to the member and having a top wall overlying the head with the element is attached to the member; and

(h) an ear integral with said wall and depending therefrom, said ear extending into the bore and against the diaphragm, holding the latter in a shifted position against said upper end of said terminal portion of the plunger in complete fluid closing relationship therewith only when the element is attached to the member.

4. In a fluid handling assembly, the combination of:

(a) a hollow pump barrel;

(b) a member on the barrel;

(c) a spring loaded plunger having conduit means therethrough, reciprocable in the barrel and extending through the member;

(d) a head above said member and provided with a bore;

(e) a shiftable, biased, flexible, generally flat diaphragm integral with the head and closing the normally uppermost end of the bore, said plunger being tightly fitted into the opposite end of the bore coaxially therewith and having a terminal portion within the bore of reduced outside diameter, presenting a space in the bore surrounding said portion, the upper end of said terminal portion being open and spaced below the diaphragm when the latter is in the normal position thereof permitting free flow of fluid into the bore through said open end of the plunger, said head having a laterally-extending, fluid outlet port communicating with said space;

(f) means on the plunger within the barrel for pumping fluid into the barrel, through the plunger, into said space, and thence through said port upon reciprocation of the plunger;

(g) a hollow, hold-down cover releasably attached to the member in surrounding relationship to the latter and in housing relationship to the head, said cover having a top wall overlying the head when the cover is on the member; and

(h) an ear integral with said wall within the cover and depending therefrom, said ear extending into the bore and against the diaphragm, holding the latter in a shifted position against said upper end of said terminal portion of the plunger in complete fluid closing relationship therewith only when the cover is on the member.

5. In a fluid handling assembly, the combination of:

(a) a hollow pump barrel;

(b) a member on the barrel;

(c) a spring-loaded plunger having conduit means therethrough, reciprocable in the barrel and extending through the member, said member having a normally uppermost face provided with a socket surrounding the plunger;

(d) a head above said face and provided with a bore;

(e) a shiftable, biased, flexible, generally flat diaphragm integral with the head and closing the normally uppermost end of the bore, said plunger being tightly fitted into the opposite end of the bore coaxially therewith and having a terminal portion within the bore of reduced outside diameter, presenting a space in the bore surrounding said portion, the upper end of said terminal portion being open and spaced below the diaphragm when the latter is in the normal position thereof permitting free flow of fluid into the bore through said open end of the plunger, said head having a laterally-extending, fluid outlet port communicating with said space;

(f) means on the plunger within the barrel for pumping fluid into the barrel, through the plunger, into said space, and thence through said port upon reciprocation of the plunger;

(g) a hollow, hold-down cover releasably attached to the member in surrounding relationship to the latter and in housing relationship to the head, said cover having a top wall overlying the head when the cover is on the member;

(h) an ear integral with said wall within the cover and depending therefrom, said ear extending into the bore and against the diaphragm, holding the latter in a shifted position against said upper end of said terminal portion of the plunger in fluid closing relationship therewith only when the cover is on the member; and

(i) a bead integral with the head in surrounding relationship thereto adjacent the lower end of the head, said cover operating through the ear in holding the plunger depressed and the bead seated in said socket to provide a seal against flow of fluid into the cover between the plunger and the member.

6. In a fluid handling assembly, the combination of:

(a) a hollow pump barrel;

(b) a member on the barrel;

(c) a spring-loaded plunger reciprocable in the barrel and extending through the member, said member having a normally uppermost face provided with a socket surrounding the plunger;

(d) a head above said face and provided with a bore;

(e) a shiftable, biased, flexible diaphragm secured to the head within the bore closing the normally uppermost end of the latter, said diaphragm having a central, disc portion and an annulus surrounding the disc portion and integrally joining the same with the head, said annulus being V-shaped in cross section, presenting continuous grooves in the outer and inner faces, respectively, of the diaphragm, said plunger being tightly fitted into the opposite end of the bore coaxially therewith and having a terminal portion within the bore of reduced outside diameter, presenting a space in the bore surrounding said portion, the upper end of said terminal portion being open and spaced below the diaphragm when the latter is in the normal position thereof permitting free flow of fluid into the bore through said open end of the plunger, said head having a laterally-extending, fluid outlet port communicating with said space;

(f) means on the plunger within the barrel for pumping fluid into the barrel, through the plunger, into said space, and thence through said port upon reciprocation of the plunger;

(g) a hollow, hold-down cover releasably attached to the member in surrounding relationship to the latter and in housing relationship to the head, said cover having a top wall overlying the head when the cover is on the member;

500





(*h*) an ear integral with said wall within the cover and depending therefrom, said ear extending into the bore and against the disc portion of the diaphragm, holding the latter in a shifted position against said upper end of said terminal portion of the plunger in fluid closing relationship therewith only when the cover is on the member; and

(*i*) a bead integral with the head in surrounding relationship thereto adjacent the lower end of the head, said cover operating through the ear in holding the plunger depressed and the bead seated in said socket to provide a seal against flow of fluid into the cover between the plunger and the member.

7. In a fluid handling assembly, the combination of:

(*a*) a container cap provided with an opening;

(*b*) a hollow pump barrel extending through said opening;

(*c*) a retention member on the barrel, said barrel having means within the cap cooperating with said member to hold the cap attached to the barrel;

(*d*) a spring-loaded plunger having conduit means therethrough, reciprocable in the barrel and extending through the member, said member having a normally uppermost face provided with a socket surrounding the plunger;

(*e*) a head above said face and provided with a bore;

(*f*) a shiftable, biased, flexible diaphragm secured to the head within the bore closing the normally uppermost end of the latter, said diaphragm having a central, disc portion and an annulus surrounding the disc portion and integrally joining the same with the head, said annulus being V-shaped in cross section, presenting continuous grooves in the outer and inner faces, respectively, of the diaphragm, said plunger being tightly fitted into the opposite end of the bore coaxially therewith and having a terminal portion within the bore of reduced outside diameter, presenting a space in the bore surrounding said portion, the upper end of said terminal portion being open and spaced below the diphragm when the latter is in the normal position thereof permitting free flow of fluid into the bore through said open end of the plunger, said head having a laterally-extending, fluid outlet port communicating with said space;

(*g*) means on the plunger within the barrel for pumping fluid into the barrel, through the plunger, into said space, and thence through said port upon reciprocation of the plunger;

(*h*) a hollow, hold-down cover releasably attached to the member in surrounding relationship to the latter and in housing relationship to the head, said cover having a top wall overlying the head when the cover is on the member;

(*i*) an ear integral with said wall within the cover and depending therefrom, said ear extending into the bore and against the disc portion of the diaphragm, holding the latter in a shifted position against said upper end of said terminal portion of the plunger in fluid closing relationship therewith only when the cover is on the member; and

(*j*) a bead integral with the head in surrounding relationship thereto adjacent the lower end of the head, said cover operating through the ear in holding the plunger depressed and the bead seated in said socket to provide a seal against flow of fluid into the cover between the plunger and the member.

8. In a fluid handling assembly, the combination of:

(*a*) a fluid container having a neck;

(*b*) a cap mounted on said neck and provided with an opening;



(*c*) a hollow pump barrel in the container, coaxial with said neck and extending through said opening;

(*d*) a retention member on the barrel exteriorly of the container, said barrel having means within the cap cooperating with said member to hold the cap attached to the barrel;

(*e*) a spring-loaded plunger having conduit means therethrough, reciprocable in the barrel and extending through the member, said member having a normally uppermost face provided with a socket surrounding the plunger;

(*f*) a head above said face and provided with a bore;

(*g*) a shiftable, biased, flexible diaphragm secured to the head within the bore closing the normally uppermost end of the latter, said diaphragm having a central, disc portion and an annulus surrounding the disc portion and integrally joining the same with the head, said annulus being V-shaped in cross section, presenting continuous grooves in the outer and inner faces, respectively, of the diaphragm, said plunger being tightly fitted into the opposite end of the bore coaxially therewith and having a terminal portion within the bore of reduced outside diameter, presenting a space in the bore surrounding said portion, the upper end of said terminal portion being open and spaced below the diaphragm when the latter is in the normal position thereof permitting free flow of fluid into the bore through said open end of the plunger, said head having a laterally-extending, fluid outlet port communicating with said space;

(*h*) means on the plunger within the barrel for pumping fluid from the container, into the barrel, through the plunger, into said space, and thence through said port upon reciprocation of the plunger;

(*i*) a hollow, hold-down cover releasably attached to the member in surrounding relationship to the latter and in housing relationship to the head, said cover having a top wall overlying the head when the cover is on the member;

(*j*) an ear integral with said wall within the cover and depending therefrom, said ear extending into the bore and against the disc portion of the diaphragm, holding the latter in a shifted position against said upper end of said terminal portion of the plunger in fluid closing relationship therewith only when the cover is on the member; and

(*k*) a bead integral with the head in surrounding relationship thereto adjacent the lower end of the head, said cover operating through the ear in holding the plunger depressed and the bead seated in said socket to provide a seal against flow of fluid from the container into the cover between the plunger and the member.

**References Cited** in the file of this patent

UNITED STATES PATENTS

| | | |
|---|---|---|
| 232,380 | Truesdell | Sept. 21, 1880 |
| 868,426 | Goodchild | Oct. 15, 1907 |
| 1,688,195 | McGregor | Oct. 16, 1928 |
| 1,970,138 | Hawley | Aug. 14, 1934 |
| 1,973,709 | Hibbert et al. | Sept. 18, 1934 |
| 2,069,156 | Bernhardt | Jan. 26, 1937 |
| 2,088,790 | Huthsing | Aug. 3, 1937 |
| 2,117,296 | Cahoon | May 17, 1938 |
| 2,299,472 | Edmundson | Oct. 20, 1942 |
| 2,392,085 | Ferrel | Jan. 1, 1946 |
| 2,681,622 | Titus | June 22, 1954 |
| 2,835,534 | Galeazzi | May 20, 1958 |
| 2,956,509 | Cooprider et al. | Oct. 18, 1960 |

PLAINTIFF'S EXHIBIT AC

501

| | | | |
|---|---|---|---|
| 835680 | P. R. Div. | | PATENT NUMBER 3064865 |
| | Class 222 | Subclass 321 | DATED NOV 20 1962 |
| | Filed complete (Date) AUG. 24, 1959 | Serial No. 835 680 | CLAIMS FOREIGN PRIORITY: Country / Date |

N, BAXTER I. JR. OF KANSAS CITY, MO.,
N, WOODROW E. OF INDEPENDENCE, MO.,

| Number claims allowed | Print claim(s) | Class | Subclass |
|---|---|---|---|
| 8 | 1 | 222 | 321 |

ook Chemical Company, Kansas City, Missouri, a corp. of
re.

EAD HAVING IMPROVED SEALING AND
NG MEANS

☐ Division of ☐ Continuation of ☐ Substitute for abandoned ☒ Continuation-in-part of

| APPLICATION Serial No. | Filed | APPLICATION Serial No. |
|---|---|---|
| | | 789,902 |
| New Patent No. | Granted | Filed 1-29-59 |

| Filing fee | Transaction | Atty's docket |
|---|---|---|
| $30 | 19635 | 8473 |

This is to certify that annexed hereto is a true copy from the records of the United States Patent Office of File Wrapper and Contents of the file identified above.

By authority of the
COMMISSIONER OF PATENTS

Certifying Officer

Date December 6, 1962

502

[1174] PLAINTIFF'S EXHIBIT AC.

(Page 1)

# SPRAYER HEAD HAVING IMPROVED SEALING AND DISCHARGING MEANS

This invention relates to improvements in pumps or sprayers and particularly to that class of spraying attachments for containers commonly employed for example, in the dispensing of insecticides and other fluids, the primary object being to eliminate leakage problems when the pump or sprayer is not in use. Hand pumps of the kind used in small containers and utilizing a spring-loaded reciprocable plunger are prone to leak while in storage, and although the discharge head of the sprayer may be held depressed and enclosed within a cap, such improvement of itself does not prevent leakage into the cap.

It is the most important object of the present invention, therefore, to provide a valve that blocks the normal flow of the fluid to the outlet orifice of the discharge head whenever the plunger is held depressed at the inner end of its path of travel.

Another important object of the present invention is to provide a diaphragm valve in the nature of a flexible membrane that may be held closed while the pump plunger is depressed through use of a hold-down member that of itself, need not either house the discharge head or operate as a sealing means.

Another important object of the present invention is to eliminate leakage from between the plunger and the barrel of the pump within which the plunger is reciprocably mounted through the medium of a seal between

503

JOINT

# APPLICATION FOR UNITED STATES PATENT

## Oath, Power of Attorney, and Petition

Being duly sworn we, BAXTER I. SCOGGIN, JR. and WOODROW E. VAUGHAN, depose and say that we are respectively a citizen of the United States of America residing at 1223 West 66th Terrace Kansas City, Missouri and a citizen of the United States of America residing at 2000 South Leslie Independence, Missouri; that we have read the foregoing specification and claims and we verily believe we are the original, first, and joint inventors of the invention or discovery in SPRAYER HEAD HAVING IMPROVED SEALING AND DISCHARGING MEANS described and claimed therein; that we do not know and do not believe that this invention was ever known or used before our invention or discovery thereof, or patented or described in any printed publication in any country before our invention or discovery thereof, or more than one year prior to this application, or in public use or on sale in the United States for more than one year prior to this application; that this invention or discovery has not been patented in any country foreign to the United States on an application filed by us or our legal representatives or assigns more than twelve months before this application; and that no application for patent on this invention or discovery has been filed by us or our representatives or assigns in any country foreign to the United States, except as follows: No Exceptions

And we hereby appoint the firm of HOVEY, SCHMIDT, JOHNSON & HOVEY, 925 Grand Avenue, Kansas City 6, Missouri, Registration No. 19,349, attorneys with full power of substitution and revocation, to prosecute this application and to transact all business in the Patent Office connected therewith.

Wherefore we pray that Letters Patent be granted to us for the invention or discovery described and claimed in the foregoing specification and claims, and we hereby subscribe our names to the foregoing specification and claims, oath, power of attorney, and this petition, this 18th day of August, 1959.

Inventor: Baxter (First name) I. (Middle initial) Scoggin, Jr. (Last name)

Post Office Address: 1223 West 66th Terrace, Kansas City, Missouri

Inventor: Woodrow (First name) E. (Middle initial) Vaughan (Last name)

Post Office Address: 2000 South Leslie, Independence, Missouri

State of Missouri }
County of Jackson } ss

Before me personally appeared BAXTER I. SCOGGIN, JR. and WOODROW E. VAUGHAN, to me known to be the persons described in the above application for patent, who signed the foregoing instrument in my presence, and made oath before me to the allegations set forth therein as being under oath, on the day and year aforesaid.

SEAL

Pat Remy Lanière
Notary Public
Jackson County, Missouri

My Commission expires April 9, 1963

This form may be executed only when attached to a complete application as the last page thereof.

Approved Single Signature Form

PLAINTIFF'S EXHIBIT AD

504

EXHIBIT AD

FORMITED

| | | | |
|---|---|---|---|
| 789902 SERIAL NO. (Series of 1948) | P. R. Div. | | PATENT NUMBER |
| Assistant examiner: Strobel | Class: 239 | Subclass: 321 | DATED |
| Division No.: 30 | Filed complete (Date): JAN. 29, 1959 | Serial No.: 789 902 | CLAIMS FOREIGN PRIORITY — Country / Date |

Applicant(s)

SCOGGIN, BAXTER I. JR. OF KANSAS CITY, MO.

VAUGHAN, WOODROW E. OF INDEPENDENCE, MO.

| Number claims allowed | Print claim | Class | Subclass |
|---|---|---|---|
| 14 | 1 | 239 | 321 |

Assignor to Cook Chemical Company, Kansas City, Mo., a corp. of Missouri.

Title of invention

PUMP-TYPE LIQUID SPRAYER HAVING SEALING MEANS

☐ Division of ☐ Continuation of ☐ Substitute for abandoned

☐ Continuation-in-part of

| APPLICATION | | APPLICATION |
|---|---|---|
| Serial No. | Filed | Serial No. |
| Now Patent No. | Granted | Filed |

| Sh. drw. | Extra claims | Filing fee | Transaction | Atty's docket |
|---|---|---|---|---|
| 1 | | $30 | 82589 | 8236 |

Send correspondence to:

~~C. EARL HOVEY~~
~~FEDERAL RESERVE BANK BLDG.~~
~~KANSAS CITY 6, MO.~~

Hovey, Schmidt, Johnson & Hovey, Federal Reserve Bank Bldg., 925 Grand Avenue Kansas City, Mo.

Principal attorney(s)

~~C. EARL HOVEY~~ Hovey, Schmidt, Johnson & Hovey

Associate attorney(s)

PARTS OF APPLICATION FILED SEPARATELY

PREPARED FOR ISSUE

R. Strobel (Assistant Examiner) — M. C. Griffith (Docket Clerk)

EXAMINED AND PASSED FOR ISSUE

R. G. O'Leary (Primary Examiner) — 30 (Division)

NOTICE OF ALLOWANCE MAILED

JAN 11 1961

FINAL FEE

| Date | Amount |
|---|---|
| | |

[THIS SPACE RESERVED]

505

[1177] PUMP-TYPE LIQUID SPRAYER HAVING SEALING MEANS

This invention relates to devices of the type employed for dispensing liquids from containers therefor and particularly to a spray-type hand pump removably mounted over the open top of a container, and constructed to discharge such liquid as a relatively fine spray during manual actuation of the pump.

The utilization of finger manipulated spray pumps to dispense various types of liquids such as insecticides from containers therefor, has been widely adopted because of the relatively inexpensive nature of such pumps and which are sold as a component part of the container itself. Generally, the pump includes a vertically reciprocable plunger extending upwardly beyond the top of the cap for the container and on which the pump is mounted, the pump being provided with a spray head or nozzle capable of forming a fine, mist-like spray of the liquid when the plunger is depressed by engagement with a finger-receiving saddle forming a part of the spray head.

Difficulties have been experienced in the utilization of the spray pumps as defined above and normally distributed mounted in place on the container, by virtue of the inherent nature of such pump structure to cause dispensing of the fluid upon accidental actuation of the plunger. One previously suggested solution to the problem consists of employing a hold-down member maintaining the plunger in its depressed condition and [1178] therefore inoperable during shipment and storage of the unit. However, leakage around the pump plunger hold-down member has occurred, since the only effective seal is normally between the lowermost portion of the hold-down member and the pump retainer forming a part of the dispensing device and secured to the barrel reciprocably carrying the spray head plunger.

It is, therefore, the most important object of the present invention to provide an efficient and inexpensive sealing member for a liquid dispensing pump of the type referred to above having a hold-down component or cap normally maintaining the plunger in its depressed condition and which sealing member prevents leaking of fluid from the con-

tainer, notwithstanding the disposition of the container during storage or shipment of the same.

A further important object of the invention is to provide a pump-type liquid sprayer having a novel sealing member therein presenting at least three separate sealed areas through which the liquid must pass before leaking from the hold-down component maintaining the plunger in its depressed condition.

An equally important object of the invention is to provide a sealing member of the aforementioned character which is adapted to be molded of one-piece construction and placed in operable position relative to the various components of the pump-type liquid sprayer during assembly of the same, whereby more effective sealing is provided during storage and shipment of the container and pump unit without materially increasing the overall cost of the assembly.

[1179] A further important aim of the invention is to provide a sealing member adapted to be disposed in a predetermined position within certain of the components of the pump-type liquid sprayer which prevents leakage of liquid from the container while the hold-down component is in operable position on the uppermost part of the sprayer and which automatically opens to permit liquid to pass from the spray unit after removal of the plunger hold-down component and actuation of the pump.

Also an important aim of the invention is to provide a sealing member which is adapted to be constructed of a material having a different coefficient of hardness from the remaining components of the liquid sprayer, whereby certain portions of the sealing member are deformed and thereby compressed upon complete assembly of the sprayer and with the plunger maintained in its depressed condition by the hold-down cap and an effective seal is provided under all storage and distribution conditions.

An additional important object of the invention is to provide a sealing member capable of maintaining the liquid within the reciprocable plunger and barrel therefor constituting a part of the pump, whereby liquid is prevented from passing into the hold-down cap maintaining the plunger within the barrel and at the lowermost end of its path of travel, this being important because hold-down

caps of the character described above are normally maintained in position by interengaged screw threads on such cap and a portion of the pump, it being recognized that the hold-down cap tends to become distorted when the [1180] same is tightly screwed on the retainer carrying the same and which distortion oftentimes permits liquid to leak from the liquid sprayer even though the plunger is in its depressed position.

Other important objects and details of the present liquid sprayer having a sealing member therein will become obvious or be explained more fully as the following specification progresses.

In the drawing:

Figure 1 is a fragmentary, vertical, cross-sectional view through a container having a liquid sprayer pump mounted thereon in operable position and with the pump plunger maintained in its depressed condition by a suitable hold-down cap housing the same and with the sealing member illustrated in its normal liquid-sealing position;

Fig. 2 is a fragmentary, vertical, cross-sectional view similar to Fig. 1 and illustrating the position of the plunger and spray head thereon after removal of the hold-down cap therefor;

Fig. 3 is an enlarged, front elevational view of the spray head of the present liquid spray device with certain components thereof removed to reveal details of construction of the same;

Fig. 4 is an enlarged, side elevational view of the sealing member adapted to be mounted in the spraying device, with certain portions thereof being in section and fragmentarily illustrating the relative disposition of the upper part of the spray head receiving the

508

JOINT

# APPLICATION FOR UNITED STATES PATENT

## Oath, Power of Attorney, and Petition

RECEIVED

FEB 26 1959

DIVISION 5 PAPER NO.

Being duly sworn we, BAXTER I. SCOGGIN, JR., WOODROW E. VAUGHAN, depose and say that we are respectively a citizen of the United States of America residing at 1223 West 60th Terrace, Kansas City, Missouri and a citizen of the United States of America residing at 2000 South Leslie, Independence, Missouri; that we have read the foregoing specification and claims and we verily believe we are the original, first, and joint inventors of the invention or discovery in PUMP-TYPE LIQUID SPRAYER HAVING SEALING MEANS described and claimed therein; that we do not know and do not believe that this invention was ever known or used before our invention or discovery thereof, or patented or described in any printed publication in any country before our invention or discovery thereof, or more than one year prior to this application, or in public use or on sale in the United States for more than one year prior to this application; that this invention or discovery has not been patented in any country foreign to the United States on an application filed by us or our legal representatives or assigns more than twelve months before this application; and that no application for patent on this invention or discovery has been filed by us or our representatives or assigns in any country foreign to the United States, except as follows: No exceptions

And we hereby appoint C. KARL HOVEY of Federal Reserve Bank Building, 925 Grand Avenue, Kansas City 6, Missouri, Registration No. 11,801, our attorney with full power of substitution and revocation, to prosecute this application and to transact all business in the Patent Office connected therewith.

Wherefore we pray that Letters Patent be granted to us for the invention or discovery described and claimed in the foregoing specification and claims, and we hereby subscribe our names to the foregoing specification and claims, oath, power of attorney, and this petition, this 21st day of January, 1959.

Inventor: Baxter (First name) I. (Middle initial) Scoggin, Jr. (Last name)

Post Office Address: 1223 West 60th Terrace, Kansas City, Missouri

Inventor: Woodrow (First name) E. (Middle initial) Vaughan (Last name)

Post Office Address: 2000 South Leslie, Independence, Missouri

State of MISSOURI
County of JACKSON } ss

Before me personally appeared BAXTER I. SCOGGIN, JR. and WOODROW E. VAUGHAN, to me known to be the persons described in the above application for patent, who signed the foregoing instrument in my presence, and made oath before me to the allegations set forth therein as being under oath, on the day and year aforesaid.

Notary Public

SEAL

My Commission Expires: Dec. 19, 1961

This form may be executed only when attached to a complete application as the last page thereof.

Approved Single Signature Form
Joint Inventors

509

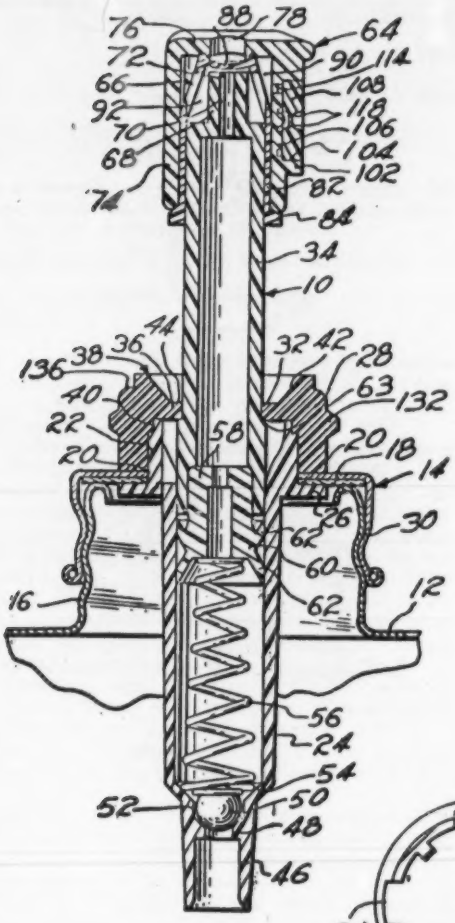


Fig. 2.

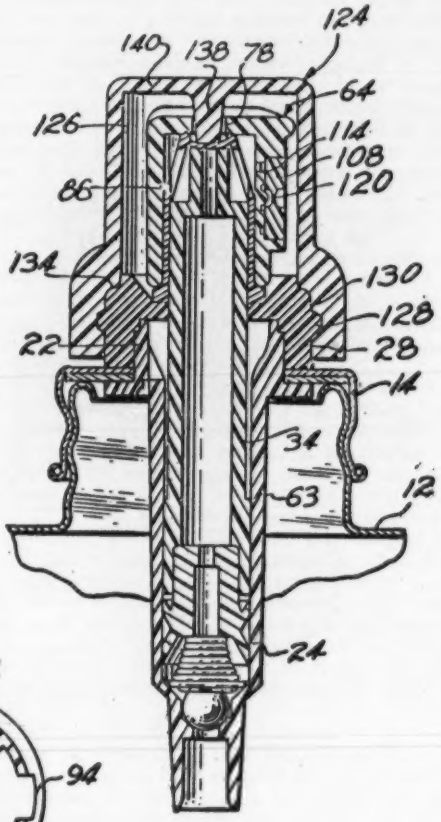


Fig. 1.

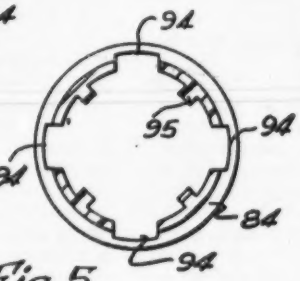


Fig. 5.

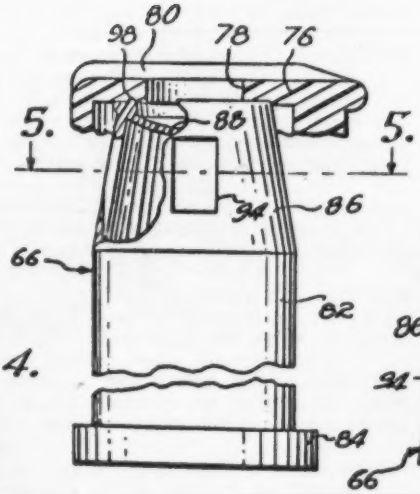


Fig. 4.

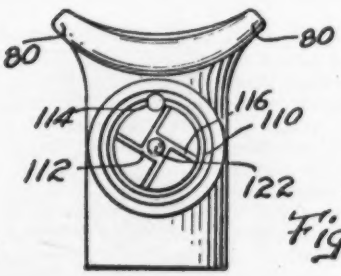


Fig. 3.

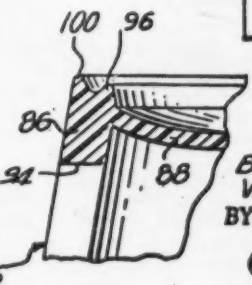


Fig. 6.

INVENTORS.
Boxter I. Scoggin Jr.
Woodrow E. Vaughan
BY
ATTORNEY

DEFENDANT'S EXHIBIT 10

510

Jan. 27, 1959 B. I. SCOGGIN, JR 2,870,943

PUMP-TYPE LIQUID SPRAYER HAVING HOLD-DOWN CAP

Filed March 4, 1957

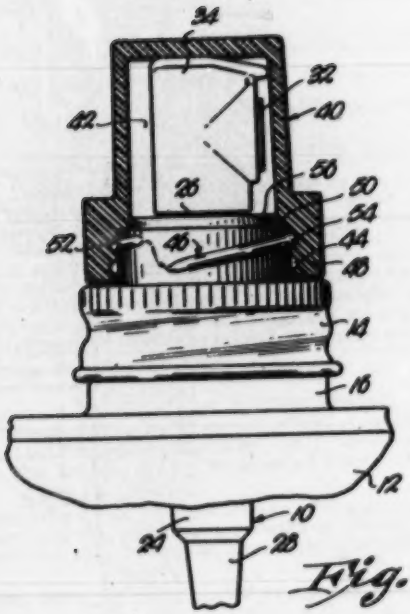


Fig. 1.

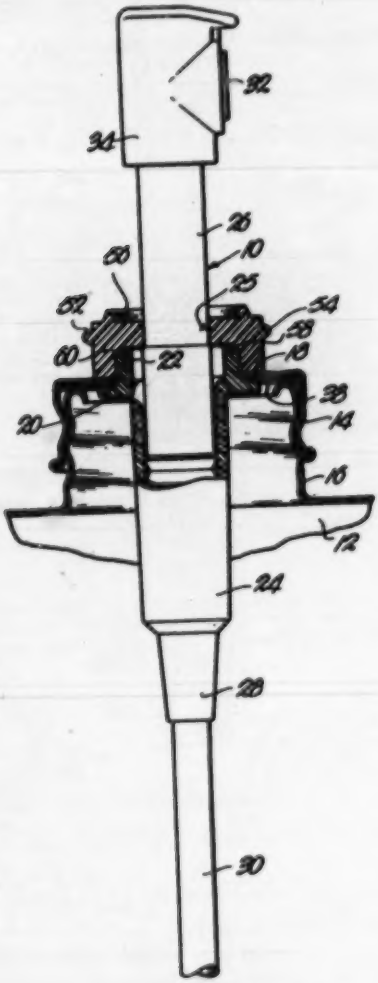


Fig. 2.

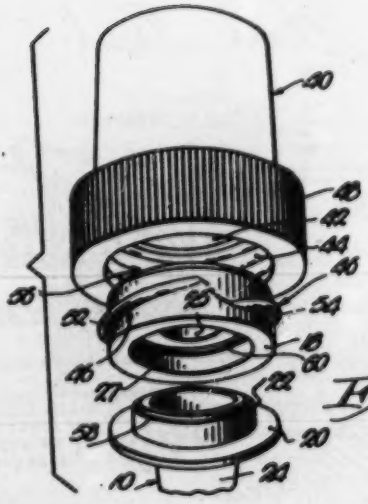


Fig. 3.

INVENTOR.
Baxter I. Scoggin
BY
ATTORNEY

United States Patent Office 2,870,943
Patented Jan. 27, 1959

511



2,870,943

# PUMP-TYPE LIQUID SPRAYER HAVING HOLD-DOWN CAP

Baxter L. Scoggin, Jr., Kansas City, Mo., assignor, by mesne assignments, to Cook Chemical Company, Kansas City, Mo., a corporation of Missouri

Application March 4, 1957, Serial No. 643,711

4 Claims. (Cl. 222—182)

This invention relates to improvements in structures for dispensing liquids wherein is provided a spray-type hand pump mounted within a container for the liquid through use of the closure cap of such container.

It is common practice, as exemplified for example by Patent No. 2,362,080, issued November 7, 1944, to dispense various types of liquids such as insecticides, through use of a finger-manipulated spray pump normally sold as a component part of the container itself. The pump includes a vertically reciprocable plunger extending upwardly beyond the top of the cap within which the pump is mounted and provided with a spray head or nozzle structure capable of emitting a fine mist-like spray when the plunger is depressed by engagement with a finger-receiving saddle forming a part of the spray head.

Difficulties have been experienced in the field by virtue of the inherent nature of such structure since accidental actuation of the plunger causes dispensing of the fluid and oftentimes the material is used in part by store employees prior to sale because of the ready accessibility to the pump itself.

It is the most important object of the present invention, therefore, to provide structure for rendering the pump inoperable during shipment and while in storage, as well as on the shelves of the retail dealer.

Another important object of the present invention is to provide structure capable of carrying out the functions above set forth which is also adapted to enclose the head of the plunger and thereby protect the same, as well as handlers of the merchandise by virtue of the fact that the said plunger is completely enclosed and held at the innermost end of its reciprocable path of travel.

A further object of the instant invention is to provide a hold-down cap that may be quickly and easily applied and removed by virtue of a releasable attachment to a part of the entire unit such as by use of screw-threaded interengagement therewith.

A further object of this invention is to provide improvements of the aforementioned character that advantageously employs a part of the unit which has a secondary function of attaching the barrel of the spray pump to the closure cap of the container.

Other objects include important details of construction to be made clear or become apparent as the following specification progresses, reference being had to the accompanying drawing, wherein:

Figure 1 is a fragmentary, elevational view of a liquid container showing a pump-type sprayer as a part thereof and including the novel hold-down cap of the instant invention, parts being in section for clearness.

Fig. 2 is a fragmentary, vertical, cross-sectional view through the container and its cap showing the pump assembly in its operable position with the hold-down cap removed; and

Fig. 3 is an exploded perspective view showing the hold-down cap and certain parts of the sprayer with which the same is operably associated.



Pump-type sprayer 10 for liquid container 12 is attached to cap 14 for retention thereby when cap 14 is removed from threaded neck 16 of container 12, and if desired, there may be provided sufficient clearance between cup-shaped retainer 18 and annular outturned flange 20 to permit rotation of cap 14 relative to sprayer 10.

Both cap or closure 14 and retainer 18 are received by a cylindrical extension 22 of frusto-conical barrel 24, forming a part of the sprayer 10, extension 22 being integral with flange 20 at the innermost edge of the latter. Flange 20 is integral with barrel 24 near the larger, uppermost edge of the latter and is held against the under side of gasket 38 in the cap 14 when the sprayer 10 is operably associated with container 12.

Retainer 18 is provided with a central opening 25 which receives tubular plunger 26 and has a cavity 27 that accommodates the enlarged extension 22 as is clear in Fig. 2. Retainer 18 is fitted tightly over the extension 22 and maintains the retainer in place with flange 20 against gasket 38 as above set forth.

Reduced end 28 of barrel 24 receives a tube 30 that extends to the bottom of container 12, it being understood that the sprayer 10 is internally constructed in a suitable manner as, for example, in accordance with teachings of the aforementioned patent to pump liquid from the container 12 into the tube 30 and thence through nozzle 32 forming a part of a spray head 34 secured to the uppermost end of plunger 26. The enlarged head 34 is normally depressed by one finger as the operator grasps the container 12 as is well understood in this art.

Cap 14 has a clearance opening therein, as best shown in Fig. 2, for the extension 22 of barrel 24 and when the cap 14 is in screw-threaded engagement with neck 16, the gasket 38 which surrounds barrel 24, is clamped tightly between flange 20 and the under side of the top of cap 14.

A hold-down member broadly designated by the numeral 40, is provided to hold the plunger 26 at the lowermost end of its path of travel within the barrel 24 in the manner illustrated by Fig. 1, it being understood as by reference to said patent, that a spring (not shown) within the barrel 24, yieldably biases the plunger 26 upwardly to the position shown in Fig. 2. The hold-down member 40 is preferably in the nature of a hollow cap so that the same not only encloses or houses the upper end of plunger 26, i. e. spray head 34, but releasably attaches to the retainer 18 and also houses the latter.

A cylindrical bore 42 within the hold-down cap 40 receives the head 34 as seen in Fig. 1, and enlargement of the bore 42 adjacent the lowermost open end of the cap 40 is provided with internal screw threads 44 that mesh with external screw threads 46 on the retainer 18, thereby releasably attaching the cap 40 to the retainer 18.

An enlarged, annular boss 48 on the cap 40 is provided with a ribbed, outermost surface to facilitate mounting and removal of the cap 40 relative to retainer 18. A downwardly-facing shoulder 50 within the cap 40 engages the upper surface of retainer 18, thereby preventing engagement between cap 40 and closure 14 to prevent forcing of the retainer 18 from its tight press-fit engagement with extension 22. As illustrated, the screw threads 46 on the retainer 18 are in the nature of a pair of substantially semi-circular, spirally arranged sections 52 and 54, permitting molding of the retainer 18 with its screw threads 46 as a single unitary part.

In addition to the seal provided between shoulder 50 and the top surface of retainer 18, there is established an additional annular seal between annular rib 56 and the annular surface of cap 40 immediately adjacent to shoulder 50. This seal is clearly illustrated in Figure 1. The cross-sectional contour of rib 56 is as shown

512





in Fig. 2 to present an upwardly and inwardly inclined annular face which snugly fits against the "corner" or line of juncture between shoulder 50 and the adjacent annular inner face of cap 40.

The interfitting surfaces between extension 22 and retainer 18 are as illustrated in Fig. 2. There is an annular notch formed in extension 22 at the outer extremity thereof and this notch 58 receives a similarly formed, continuous annular projection 60 formed integrally with retainer 18 and at a point where elements 58 and 60 will interlock when the parts are in assembled condition.

Thus, any accidental leakage or seepage from container 12 through the parts after they are assembled is obviated.

The material from which retainer 18 is produced is soft enough to be slightly compressed when shoulder 50 and the corner adjacent thereto, rides along the upwardly and inwardly inclined outer face of rib 56 when cap 40 is moved to position.

Having thus described the invention what is claimed as new and desired to be secured by Letters Patent is:

1. In a closure assembly for an open-top container having a perforated cap over said open top thereof mounting a spray unit including a barrel provided with a tubular extension passing coaxially upwardly through the perforation in said cap, a plunger reciprocably carried by the barrel and normally extending therebeyond and a spray head on the upper end of the plunger above said extension, the combination with said spray unit of an annular retainer telescoped over and secured to the extension above said cap and provided with external, circumferentially disposed screw threads and an annular, continuous segment at the upper part of the retainer above said screw threads, and a cup-shaped hold-down member housing the head and holding the plunger depressed at substantially the innermost path of travel thereof within the barrel, said member being provided with internal screw threads complementally engaging said screw threads on the retainer and having an internal, circumferentially extending, continuous shoulder disposed to engage said segment around the entire periphery thereof and thereby present a liquid-tight seal located between the spray head and said threads on the retainer and said member respectively, said shoulder being spaced from the lower annular peripheral edge of the member a distance at least slightly less than the distance from that portion of said segment normally engaged by said shoulder, to the proximal upper surface of the cap whereby said lower edge of the member is maintained out of contacting relationship with the cap when the member is on the retainer in a position with said shoulder in tight sealing engagement with the segment.



2. A closure assembly as set forth in claim 1 wherein one of the normally interengaged surfaces of the shoulder and segment respectively is substantially conical to present an inclined annular face coaxial with the member and said retainer and of sufficient diameter at the largest end thereof to cause the seal effected between the shoulder and said segment to become tighter as the shoulder slides on said segment during shifting of the member toward the cap.

3. A closure assembly as set forth in claim 2 wherein said retainer is provided with a continuous, annular rib integral with the normally upper edge thereof and defining said segment, said rib having an outwardly facing, inclined surface presenting said conical face and of greatest external diameter at the zone of juncture of the rib with the retainer, said member having a pair of inner, coaxial, longitudinally spaced, cylindrical surfaces, the innermost cylindrical surface having a smaller diameter than the outermost cylindrical surface and presenting said shoulder therebetween lying in a plane perpendicular to the axes of said cylindrical surfaces, the diameter of said innermost cylindrical surface of the member being intermediate the diameters of opposed external end margins of said rib.

4. A closure assembly as set forth in claim 3 wherein the member and retainer are constructed of materials having different coefficients of hardness whereby one of the interengaged faces of the rib and said shoulder respectively is deformed as the member is shifted toward the cap to thereby produce a more effective seal therebetween.


References Cited in the file of this patent

UNITED STATES PATENTS

| | | |
|---|---|---|
| 1,447,712 | Cohen | Mar. 6, 1923 |
| 2,118,222 | Nilson | May 24, 1938 |
| 2,119,884 | Lohse | June 7, 1938 |
| 2,586,687 | Mellon | Feb. 19, 1952 |
| 2,844,290 | Slade | July 22, 1958 |

DEFENDANT'S EXHIBIT 31

513

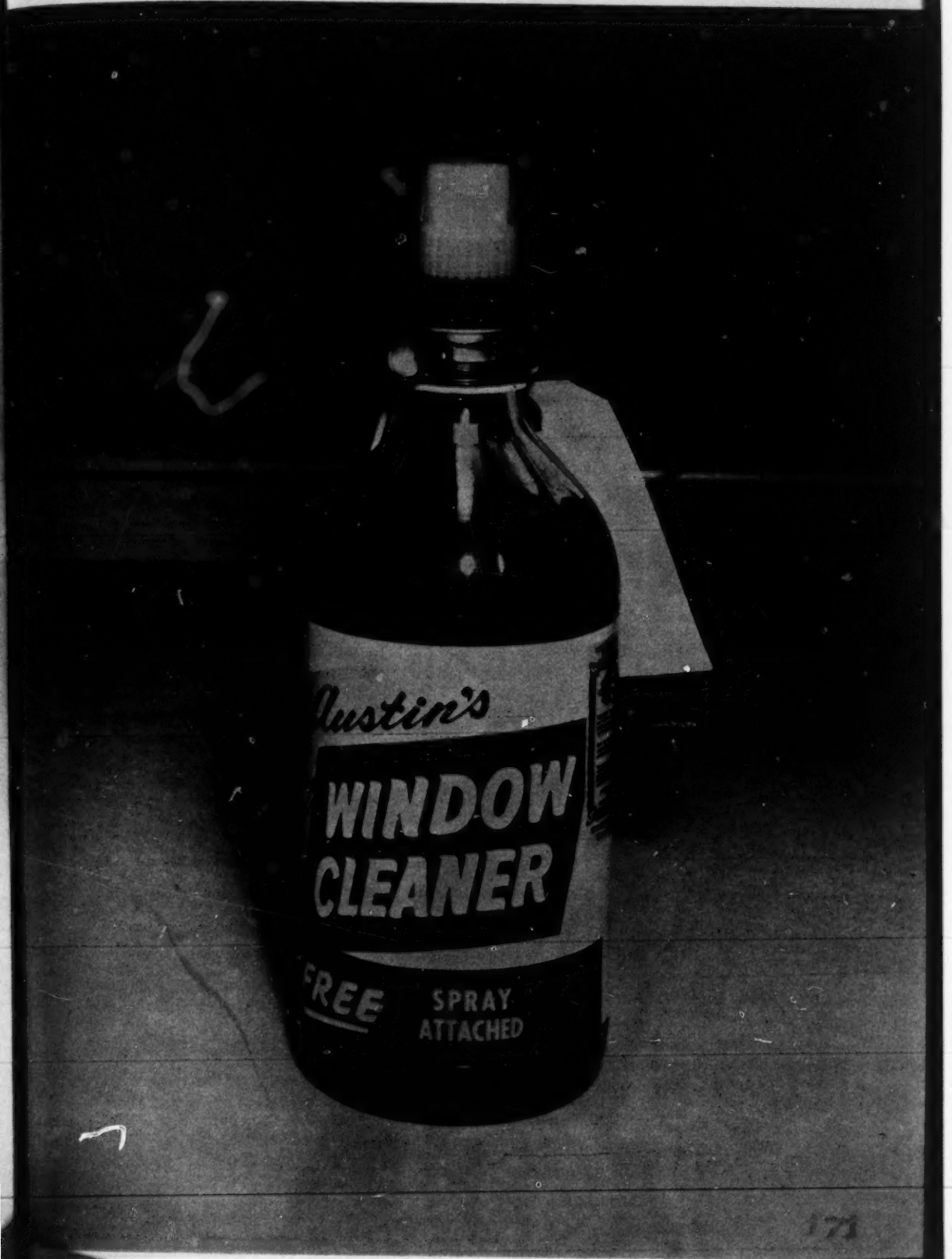

DEFENDANT'S EXHIBIT 31-A

514

DEFENDANT'S EXHIBIT 33

515

[1189] DEFENDANT'S EXHIBIT 35.

WINDOW CLEANER

| | 1956<br>1957 | 1957<br>1958 | 1958<br>1959 | 1959<br>1960 | 1960<br>1961 | 1961<br>1962 |
|---|---|---|---|---|---|---|
| June | 92 | 53 | 57 | 881 | 987 | 1980 |
| July | 35 | 41 | 53 | 865 | 686 | 1171 |
| August | 103 | 100 | 16 | 836 | 974 | 965 |
| September | 35 | 23 | 95 | 766 | 1037 | 998 |
| October | 77 | 61 | 2728 | 1073 | 1152 | 1402 |
| November | 92 | 67 | 1588 | 858 | 1098 | 1591 |
| December | 51 | 25 | 618 | 953 | 1115 | 1086 |
| SUB-TOTAL | 485 | 370 | 5155 | 6232 | 7049 | 9193 |
| January | 50 | 85 | 560 | 816 | 1006 | 1086 |
| February | 54 | 47 | 878 | 1086 | 569 | |
| March | 78 | 44 | 1073 | 945 | 1546 | |
| April | 28 | 88 | 2588 | 1659 | 1283 | |
| May | 117 | 75 | 1539 | 1533 | 1329 | |
| TOTAL | 812 | 709 | 11793 | 12271 | 12782 | |

DEFENDANT'S EXHIBIT 90

517

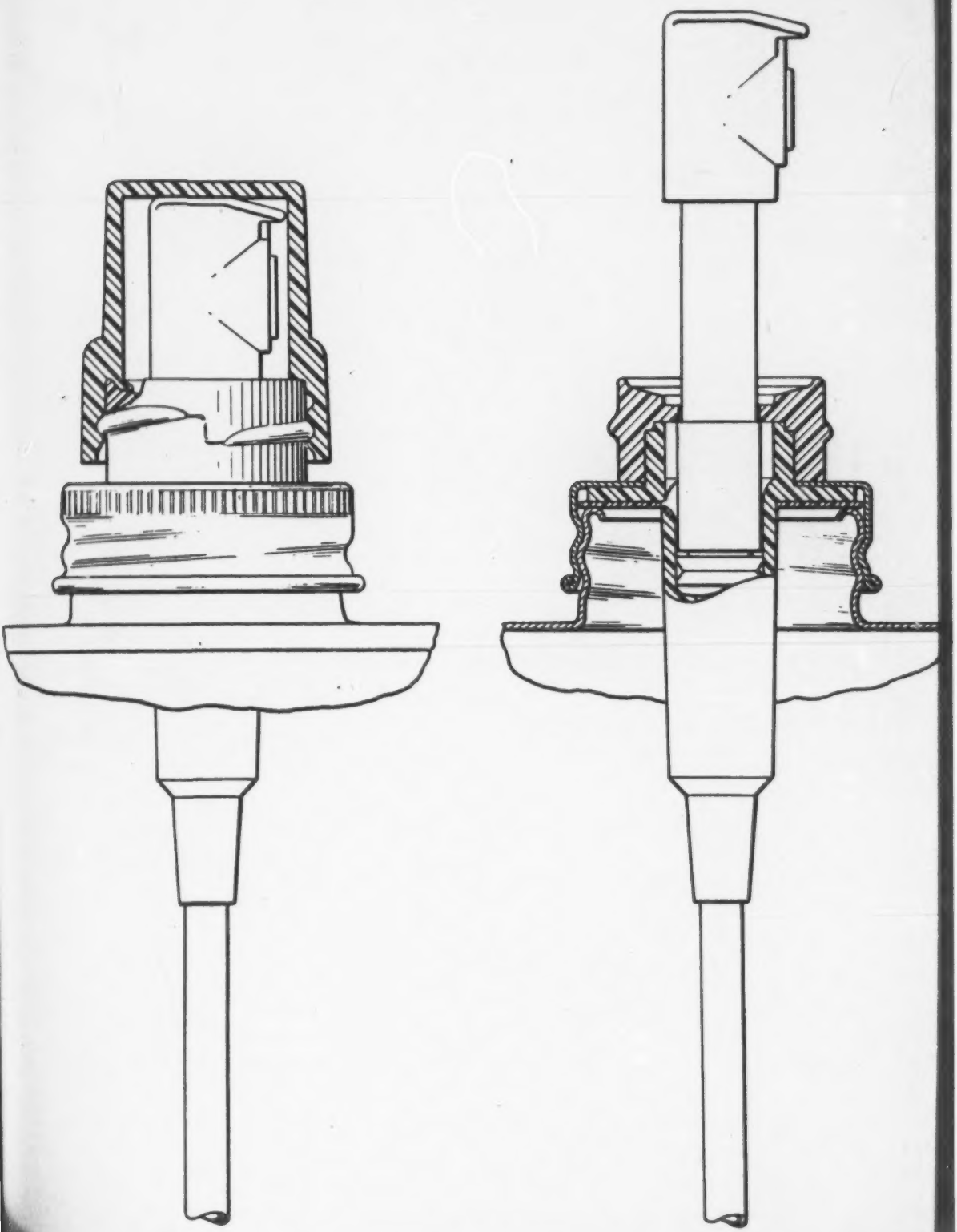

#1

SCOGGIN, JR.
PATENT-IN-SUIT
2,870,943
1957-1959

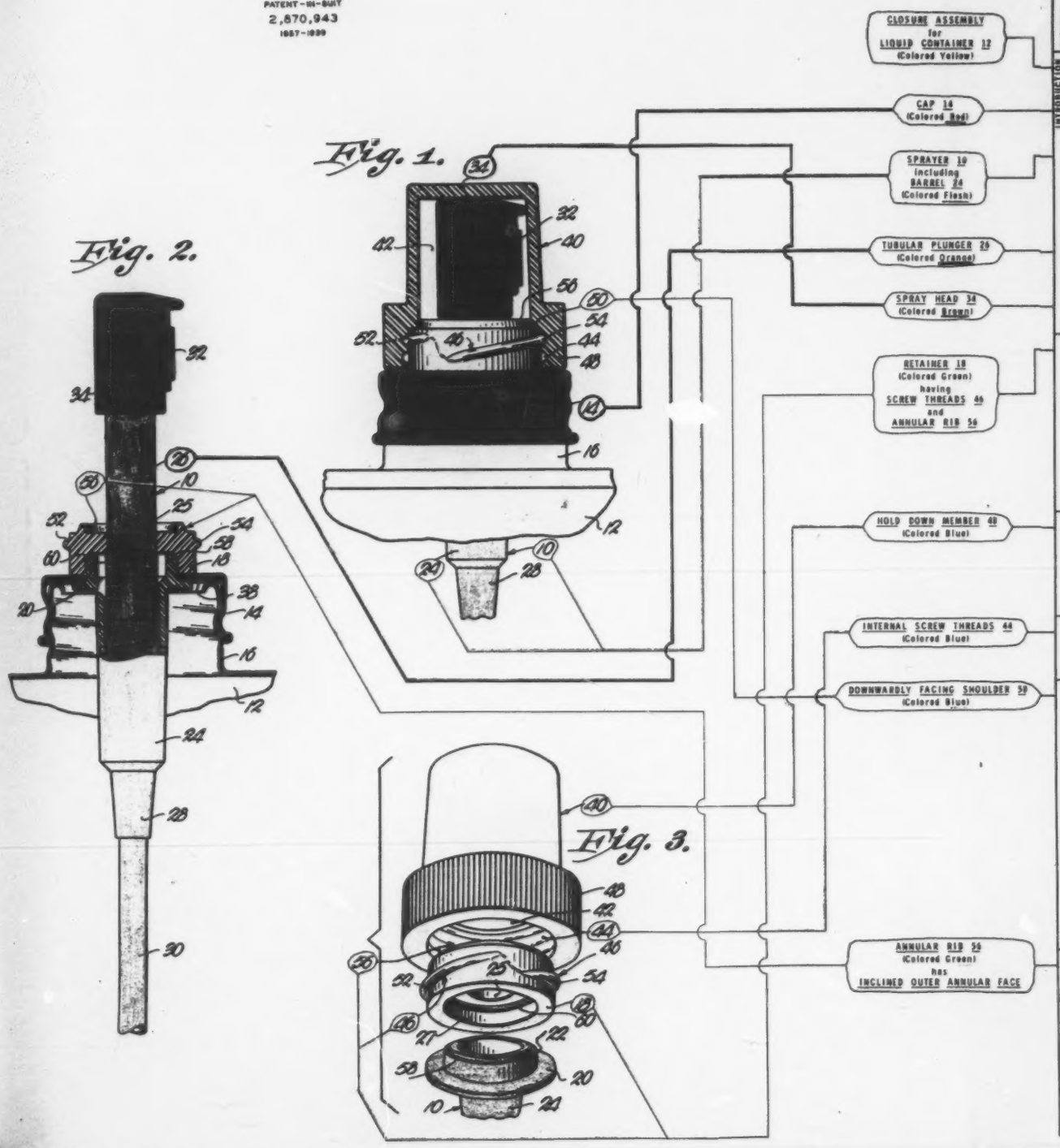


**MECHANICAL ELEMENTS OF SCOGGIN, JR. PATENT 2,870,943**
As Described In

| ELEMENT NO. | CLAIM 1 | CLAIM 2 |
|---|---|---|
| INTRODUCTION A | IN A CLOSURE ASSEMBLY FOR AN OPEN-TOP CONTAINER HAVING | believes claims & ex cross covering many types of seals |
| B | A PERFORATED CAP OVER SAID OPEN TOP THEREOF MOUNTING | |
| C | A SPRAY UNIT INCLUDING<br>A BARREL<br>PROVIDED WITH A TUBULAR EXTENSION PASSING COAXIALLY UPWARDLY THROUGH THE PERFORATION IN SAID CAP, | |
| D | A PLUNGER RECIPROCABLY CARRIED BY THE BARREL AND NORMALLY EXTENDING THEREBEYOND AND | |
| E | A SPRAY HEAD ON THE UPPER END OF THE PLUNGER ABOVE SAID EXTENSION, | |
| 1 | THE COMBINATION WITH SAID SPRAY UNIT OF<br>AN ANNULAR RETAINER<br>TELESCOPED OVER AND SECURED TO THE EXTENSION ABOVE SAID CAP AND PROVIDED WITH<br>EXTERNAL, CIRCUMFERENTIALLY DISPOSED SCREW THREADS AND<br>AN ANNULAR, CONTINUOUS SEGMENT AT THE UPPER PART OF THE RETAINER ABOVE SAID SCREW THREADS, AND | A CLOSURE ASSEMBLY AS SET FORTH IN CLAIM 1<br>WHEREIN |
| 2 | A CUP-SHAPED HOLD-DOWN MEMBER<br>HOUSING THE HEAD AND<br>HOLDING THE PLUNGER DEPRESSED AT SUBSTANTIALLY THE INNERMOST PATH OF TRAVEL THEREOF WITHIN THE BARREL, SAID MEMBER BEING PROVIDED WITH | |
| 3 | INTERNAL SCREW THREADS<br>COMPLEMENTALLY ENGAGING SAID SCREW THREADS ON THE RETAINER AND HAVING | |
| 4 | AN INTERNAL, CIRCUMFERENTIALLY EXTENDING, CONTINUOUS SHOULDER<br>DISPOSED TO ENGAGE SAID SEGMENT AROUND THE ENTIRE PERIPHERY THEREOF AND THEREBY PRESENT A LIQUID-TIGHT SEAL LOCATED BETWEEN THE SPRAY HEAD AND SAID THREADS ON THE RETAINER AND SAID MEMBER RESPECTIVELY,<br>SAID SHOULDER BEING SPACED FROM THE LOWER ANNULAR PERIPHERAL EDGE OF THE MEMBER A DISTANCE AT LEAST SLIGHTLY LESS THAN THE DISTANCE FROM THAT PORTION OF SAID SEGMENT NORMALLY ENGAGED BY SAID SHOULDER, TO THE PROXIMAL UPPER SURFACE OF THE CAP<br>WHEREBY SAID LOWER EDGE OF THE MEMBER IS MAINTAINED OUT OF CONTACTING RELATIONSHIP WITH THE CAP WHEN THE MEMBER IS ON THE RETAINER IN A POSITION WITH SAID SHOULDER IN TIGHT SEALING ENGAGEMENT WITH THE SEGMENT. | shoulder is "structure" not a surface merely |
| 5 | | ONE OF THE NORMALLY INTERENGAGED SURFACES OF THE SHOULDER AND SEGMENT RESPECTIVELY IS SUBSTANTIALLY CONICAL TO PRESENT<br>AN INCLINED ANNULAR FACE<br>COAXIAL WITH THE MEMBER AND SAID RETAINER AND<br>OF SUFFICIENT DIAMETER AT THE LARDEST END THEREOF TO CAUSE THE SEAL EFFECTED BETWEEN THE SHOULDER AND SAID SEGMENT TO BECOME TIGHTER AS THE SHOULDER SLIDES ON SAID SEGMENT DURING SHIFTING OF THE MEMBER TOWARD THE CAP. |

DEFENDANT'S EXHIBIT 110

521

DEFENDANT'S EXHIBIT 112

522

DEFENDANT'S EXHIBIT 114

523

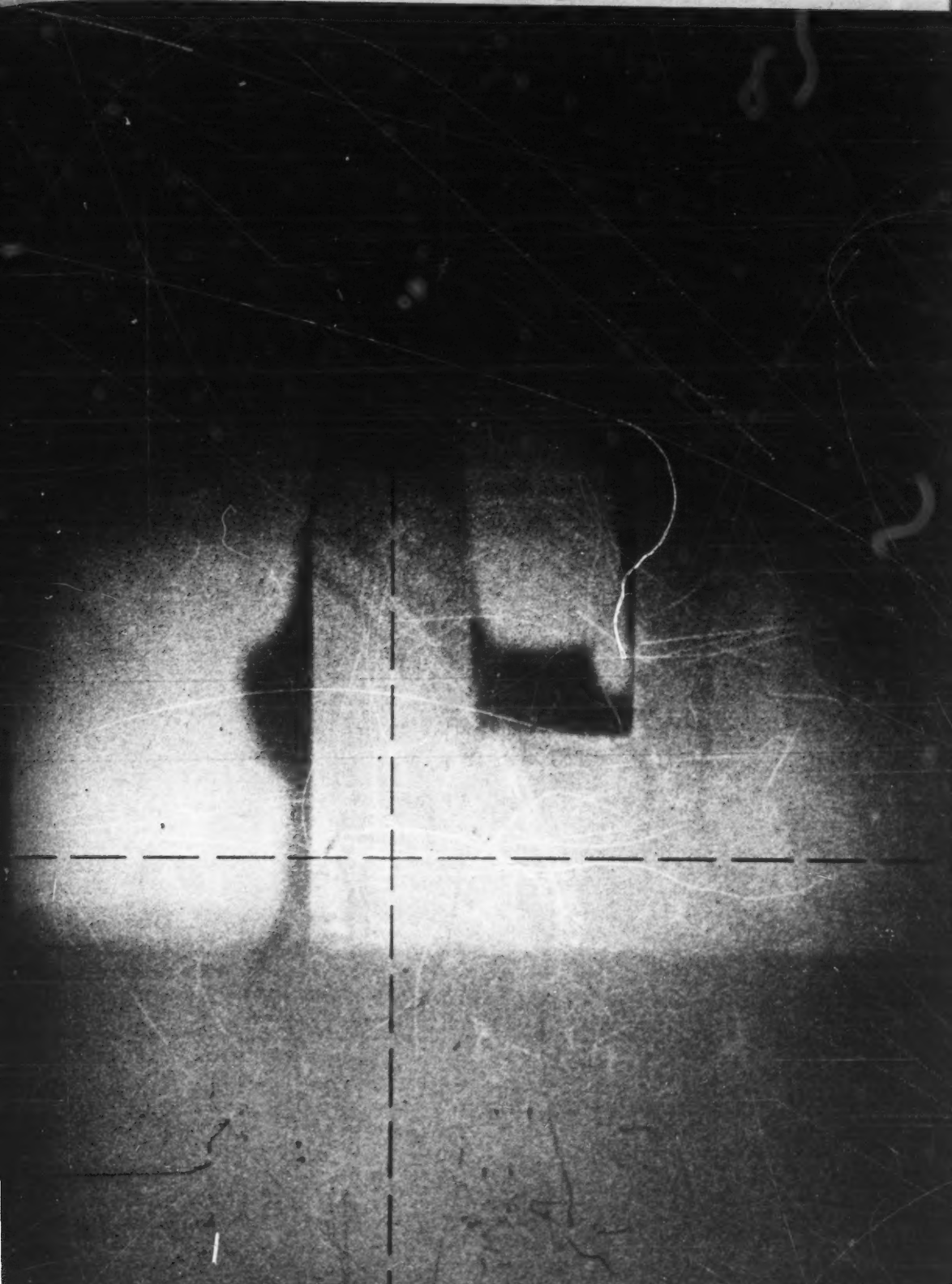

DEFENDANT'S EXHIBIT 116

524

DEFENDANT'S EXHIBIT 118

525

DRAWINGS SHOWING

# VARIOUS STAGES IN ASSEMBLY

OF

# CALMAR COVER CAP ON COLLAR

BASED ON

PHOTOMICROGRAPHS OF SECTIONED SAMPLES

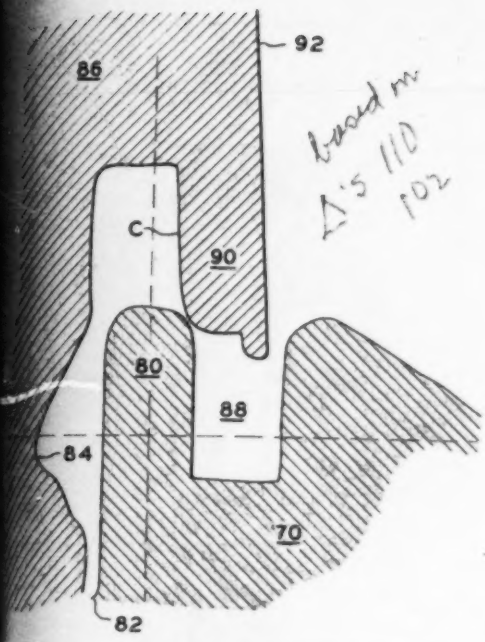


based on Δ's 110 102

**STAGE 1**

PRIOR TO CONTACT

of

SEALING RING 90 & WALL 80

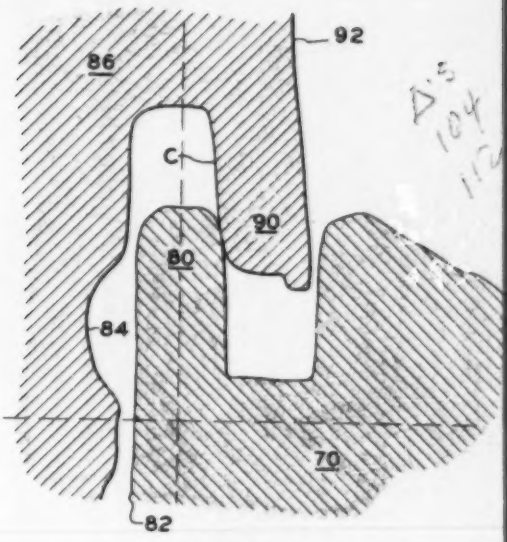


Δ's 104 112

**STAGE 2**

INITIAL CONTACT

of

SEALING RING 90 & WALL 80

would improvement with straight

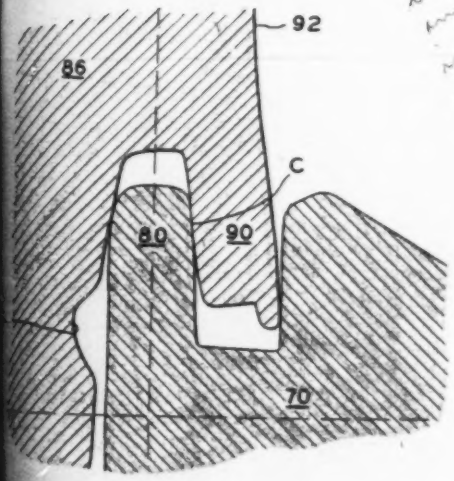


Δ's 106 114

**STAGE 3**

INTERMEDIATE POSITION

of

SEALING RING 90 & WALL 80

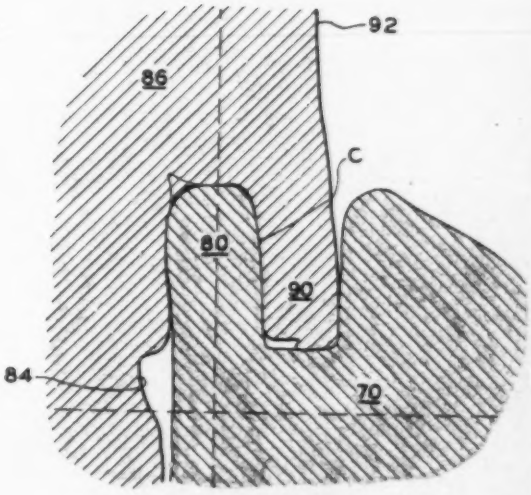


**STAGE 4**

COMPLETED ASSEMBLY

of

SEALING RING 90 & WALL 80

CHART SHOWING WHEREIN

# MECHANICAL ELEMENTS OF CLAIMS 1 & 2 OF SCOGGIN, JR. PATENT 2,870,943 ARE FOUND IN ACCUSED DEVICE

SCOGGIN, JR.
PATENT-IN-SUIT
2,870,943
1957-1959

Fig. 1.

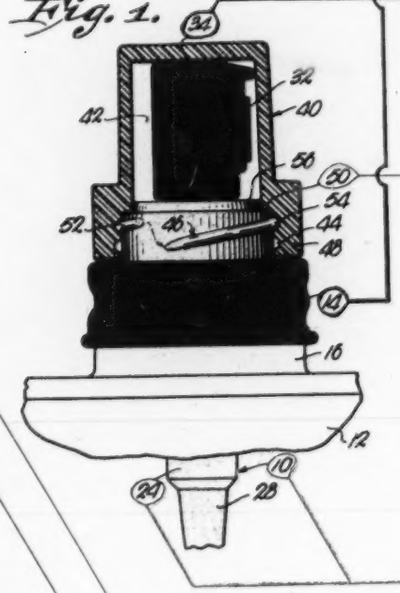


Fig. 2.

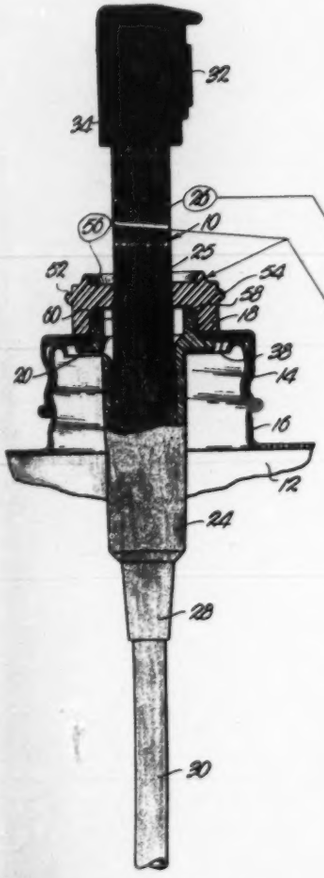


Fig. 3.

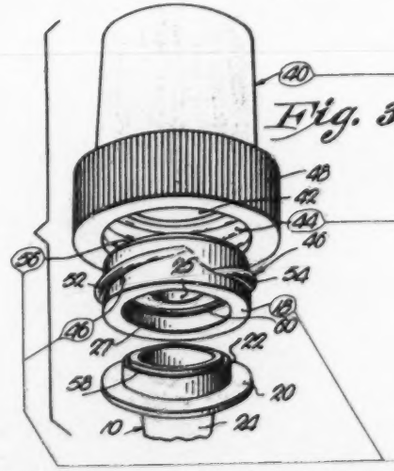


CLOSURE ASSEMBLY for LIQUID CONTAINER 12 (Colored Yellow)

CAP 14 (Colored Red)

SPRAYER 10 including BARREL 24 (Colored Flesh)

TUBULAR PLUNGER 28 (Colored Orange)

SPRAY HEAD 34 (Colored Brown)

RETAINER 18 (Colored Green) having SCREW THREADS 46 and ANNULAR RIB 56

HOLD DOWN MEMBER 40 (Colored Blue)

INTERNAL SCREW THREADS 44 (Colored Blue)

DOWNWARDLY FACING SHOULDER 50 (Colored Blue)

ANNULAR RIB 56 (Colored Green) has INCLINED OUTER ANNULAR FACE

| ELEMENT NO. | MECHANICAL ELEMENTS OF SCOGGIN, JR. PATENT 2,870,943 As Described In | | IS ELEMENT FOUND IN CALMAR DEVICE? |
|---|---|---|---|
| | CLAIM 1 | CLAIM 2 | |
| INTRODUCTION A | IN A CLOSURE ASSEMBLY FOR AN OPEN-TOP CONTAINER HAVING | | YES |
| B | A PERFORATED CAP OVER SAID OPEN TOP THEREOF MOUNTING | | YES |
| C | A SPRAY UNIT INCLUDING<br>A BARREL<br>PROVIDED WITH A TUBULAR EXTENSION PASSING COAXIALLY UPWARDLY THROUGH THE PERFORATION IN SAID CAP, | | YES |
| D | A PLUNGER RECIPROCABLY CARRIED BY THE BARREL AND NORMALLY EXTENDING THEREBEYOND AND | | YES |
| E | A SPRAY HEAD ON THE UPPER END OF THE PLUNGER ABOVE SAID EXTENSION, | | YES |
| 1 | THE COMBINATION WITH SAID SPRAY UNIT OF<br>AN ANNULAR RETAINER<br>TELESCOPED OVER AND SECURED TO THE EXTENSION ABOVE SAID CAP AND PROVIDED WITH<br>EXTERNAL, CIRCUMFERENTIALLY DISPOSED SCREW THREADS AND<br>AN ANNULAR, CONTINUOUS SEGMENT AT THE UPPER PART OF THE RETAINER ABOVE SAID SCREW THREADS, AND | A CLOSURE ASSEMBLY AS SET FORTH IN CLAIM 1<br>WHEREIN | YES |
| 2 | A CUP-SHAPED HOLD-DOWN MEMBER<br>HOUSING THE HEAD AND<br>HOLDING THE PLUNGER DEPRESSED AT SUBSTANTIALLY THE INNERMOST PATH OF TRAVEL THEREOF WITHIN THE BARREL, SAID MEMBER BEING PROVIDED WITH | | YES |
| 3 | INTERNAL SCREW THREADS<br>COMPLEMENTALLY ENGAGING SAID SCREW THREADS ON THE RETAINER AND HAVING | | YES |
| 4 | AN INTERNAL, CIRCUMFERENTIALLY EXTENDING, CONTINUOUS SHOULDER<br>DISPOSED TO ENGAGE SAID SEGMENT AROUND THE ENTIRE PERIPHERY THEREOF AND THEREBY PRESENT A LIQUID-TIGHT SEAL LOCATED BETWEEN THE SPRAY HEAD AND SAID THREADS ON THE RETAINER AND SAID MEMBER RESPECTIVELY,<br>SAID SHOULDER BEING SPACED FROM THE LOWER ANNULAR PERIPHERAL EDGE OF THE MEMBER A DISTANCE AT LEAST SLIGHTLY LESS THAN THE DISTANCE FROM THAT PORTION OF SAID SEGMENT NORMALLY ENGAGED BY SAID SHOULDER, TO THE PROXIMAL UPPER SURFACE OF THE CAP<br>WHEREBY SAID LOWER EDGE OF THE MEMBER IS MAINTAINED OUT OF CONTACTING RELATIONSHIP WITH THE CAP WHEN THE MEMBER IS ON THE RETAINER IN A POSITION WITH SAID SHOULDER IN TIGHT SEALING ENGAGEMENT WITH THE SEGMENT. | | YES |
| 5 | | ONE OF THE NORMALLY INTERENGAGED SURFACES OF THE SHOULDER AND SEGMENT RESPECTIVELY IS SUBSTANTIALLY CONICAL TO PRESENT<br>AN INCLINED ANNULAR FACE<br>COAXIAL WITH THE MEMBER AND SAID RETAINER AND<br>OF SUFFICIENT DIAMETER AT THE LARGEST END THEREOF TO CAUSE THE SEAL EFFECTED BETWEEN THE SHOULDER AND SAID SEGMENT TO BECOME TIGHTER AS THE SHOULDER SLIDES ON SAID SEGMENT DURING SHIFTING OF THE MEMBER TOWARD THE CAP. | YES |

527

## ACCUSED DEVICE

CALMAR SPRAYER & COVER CAP ASSEMBLY
AS COMMERCIALIZED BY
COLGATE

| | IS ELEMENT FOUND IN CALMAR DEVICE? |
|---|---|
| CLOSURE ASSEMBLY for LIQUID CONTAINER (Not Illustrated) | YES |
| CAP 12 (Colored Red) | YES |
| SPRAYER including BARREL 19 (Colored Flesh) | YES |
| TUBULAR PLUNGER 28 (Colored Orange) | YES |
| SPRAY HEAD 29 (Colored Brown) | YES |
| RETAINER 70 (Colored Green) having SCREW THREADS 82 and ANNULAR WALL 80 | YES |
| HOLD DOWN CAP 88 (Colored Blue) | YES |
| INTERNAL SCREW THREADS 84 (Colored Blue) | YES |
| ANNULAR SEALING RING 99 (Colored Blue) | YES |
| ANNULAR SEALING RING 99 (Colored Blue) has INCLINED OUTER ANNULAR FACE C | YES |

FIG. 1.

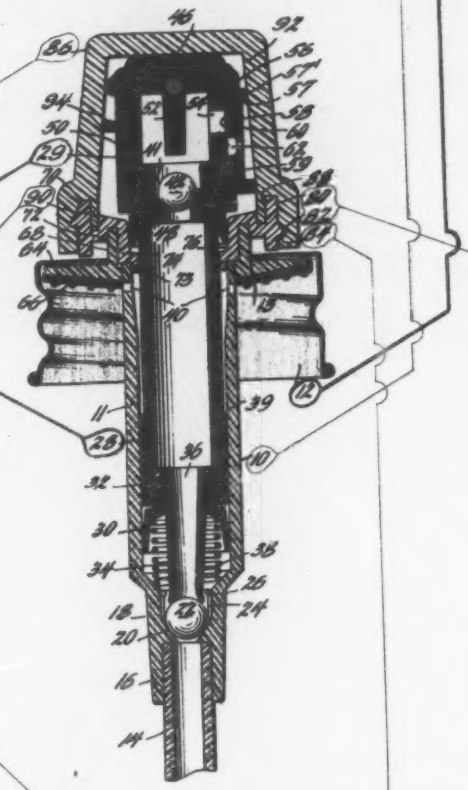

FIG. 2.

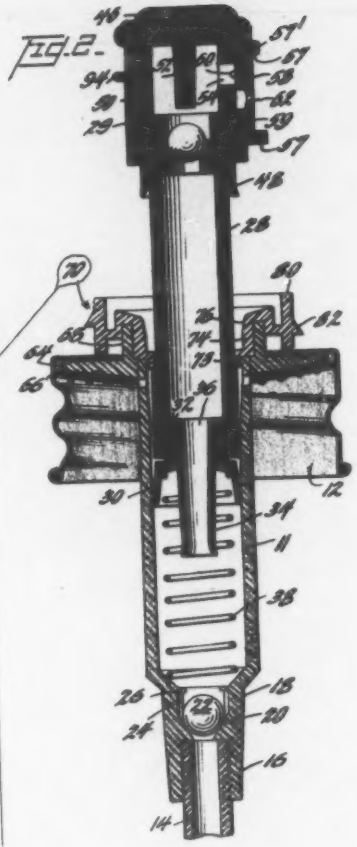

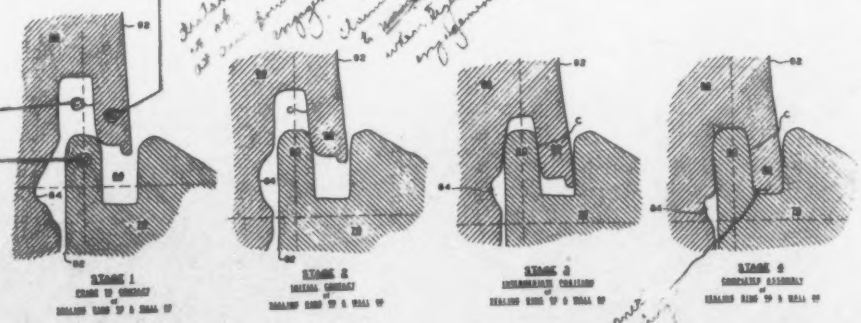

DEFENDANT'S EXHIBIT 121

529

Oct. 18, 1960 R. C. COOPRIDER ET AL 2,956,509

FLUID DISPENSING PUMPS

Filed Sept. 9, 1958 2 Sheets-Sheet 1

FIG. 1.

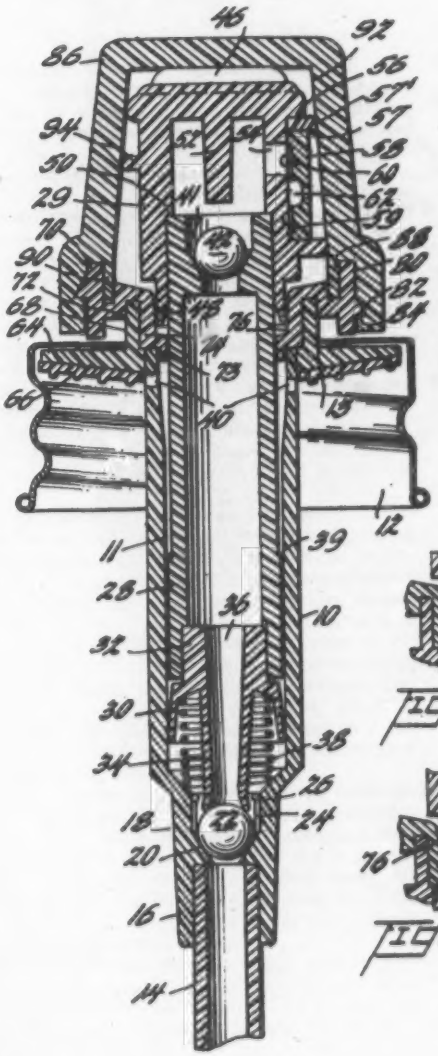


FIG. 2.

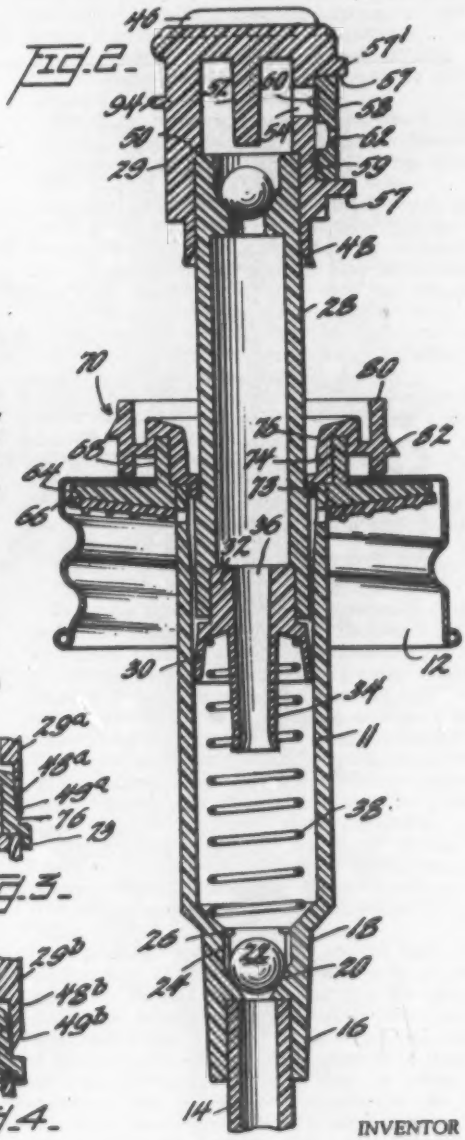


FIG. 3.

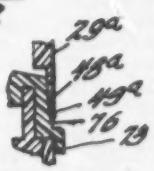


FIG. 4.

INVENTOR

Rex C. Coopridor

Douglas F. Corsette

BY Watson, Cole, Grindle & Watson

ATTORNEY

530

Oct. 18, 1960 R. C. COOPRIDER ET AL 2,956,509

FLUID DISPENSING PUMPS

Filed Sept. 9, 1958 2 Sheets-Sheet 2

FIG. 5.

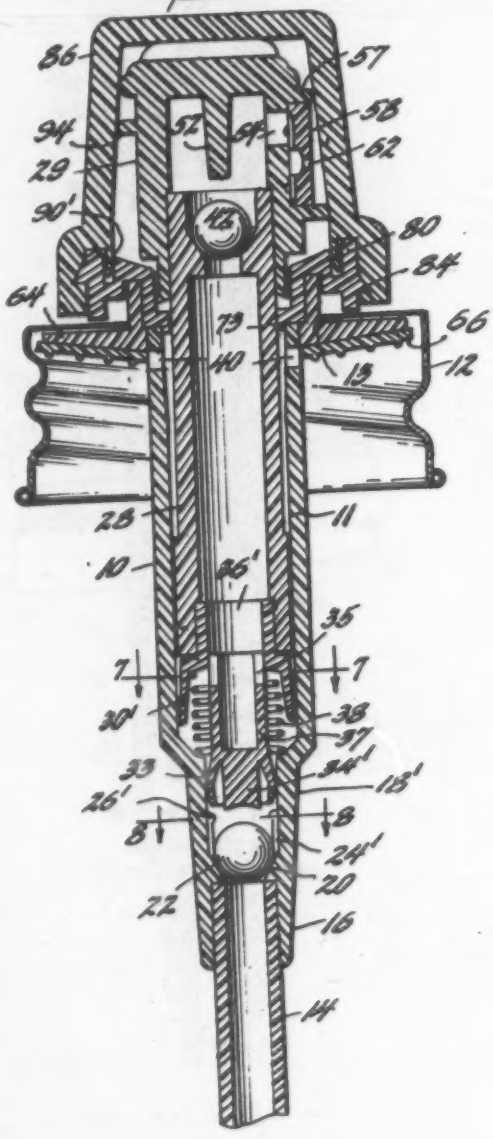


FIG. 6.

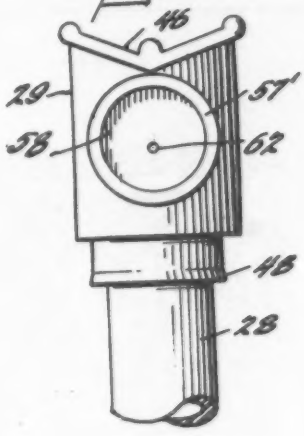


FIG. 7.

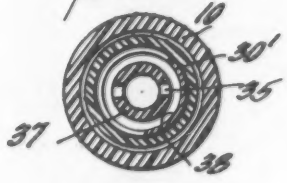


FIG. 8.

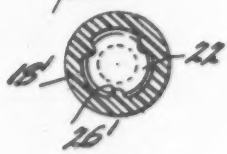


INVENTOR
Rex C. Cooprider
Douglas F. Corvette
BY Watson, Cole, Grindle & Watson
ATTORNEY

531

# United States Patent Office

2,956,509
Patented Oct. 18, 1960



2,956,509

## FLUID DISPENSING PUMPS

Rex C. Cooprider, Downey, and Douglas F. Cornette, Los Angeles, Calif., assignors to The Drackett Company, Cincinnati, Ohio, a corporation of Ohio

Filed Sept. 9, 1958, Ser. No. 760,842

20 Claims. (Cl. 103—178)

This invention relates to new and improved fluid dispensing pumps of the class in which the pump plunger is immobilized in a predetermined position for packing and shipping purposes to avoid inadvertent actuation and discharge of the liquid contents of a container to which such a pump may be applied.

In liquid dispensing pumps adapted for application to and sale with containers for various commercially dispensed liquids, it has been heretofore known, as exemplified by the Lohse U.S. Patent 2,119,884, to utilize a protective cover for immobilizing the pump plunger in a predetermined depressed condition and also for trapping and retaining any liquid that may be inadvertently discharged from the pump. It has been found, however, that in practice a very appreciable amount of liquid may be discharged into such a protective cap due to inversion of the container and/or expansion of its contents. In such case, the liquid may escape either through the usual liquid discharge passage of the plunger and the plunger head or between the plunger and the barrel in which it works.

It is, accordingly, a primary object of the present invention to provide an improved form of fluid dispensing pump having means for retaining the plunger in immobilized position and including additional means rendered operative by immobilization of the plunger for closing off the plunger discharge passage and at the same time providing a fluid seal or block preventing egress of the liquid between the pump plunger and its associated barrel.

The preferred means for retaining the plunger thus immobilized is a protective hold-down cap which is threaded or otherwise secured to the container over the plunger head to depress the plunger to its immobilized position against spring pressure.

The invention further contemplates that the discharge opening or orifice of the plunger head will be surrounded by a frusto-conical sealing surface for cooperation with a similar frusto-conical interior surface of the protective cap whereby to prevent discharge of fluid from the plunger head into the cap incident to application of the cap and depression of the plunger to its immobilized position, as will as subsequent thereto.

It is a further incidental object to utilize such cooperating conical surfaces on the cap and plunger head respectively for automatically centering and locating the threaded skirt of the cap for cooperation with the threaded hold-down collar of the pump, the plunger and plunger head being rotatable about an axis coincident with said threaded collar to facilitate turning of the cap onto the collar.

A still further object of the invention is to provide the cap and the threaded collar or other portion on which it is received with cooperating sealing means. In particular, such sealing means may comprise an upwardly axially opening annular groove in the threaded collar and an integral sealing ring guided by the cap for jamming reception in said groove. With such arrangement, the cap may be formed of a somewhat flexible



resilient plastic, such as polyethylene, to attain an improved sealing function by its said sealing ring and such ring will further function to resist radial stretching of the cap skirt with consequent slippage of the threads during application of the cap by automatic machinery. In other words, this well-recognized difficulty inherent in threaded resilient caps is overcome by the present invention.

The foregoing as well as other incidental objects and advantages are all attained by the embodiments of the invention illustrated in the accompanying drawings in which:

Figure 1 represents an axial sectional view through a liquid dispensing pump of the invention and the threaded container cap to which it is applied, the intake or suction tube of the pump being shown but fragmentarily. In this view, the pump is shown with the plunger in its immobilized position and with the protective cap applied;

Figure 2 is a view of the pump structure shown in Figure 1, but with the protective cap removed and the pump plunger raised to operative position;

Figures 3 and 4 respectively are fragmentary sectional views taken in the same plane as Figures 1 and 2 and showing modified forms of plunger seals;

Figure 5 is a view similar to Figure 1, showing a slightly modified form of pump structure;

Figure 6 is a detail elevational view of the upper end portion of the pump plunger and plunger head as seen from the right in Figure 2;

Figure 7 is a section on the line 7—7 of Figure 5; and

Figure 8 is a section on the line 8—8 of Figure 5.

Referring now in detail to the accompanying drawings, and considering first the form of the invention illustrated in Figures 1 and 2, these figures illustrate the invention as embodied in a liquid dispensing pump, which in this instance is mounted in a usual threaded metal container cap for application to a bottle, can or other container to dispense the liquid contents thereof in a known manner. The pump comprises a stationary pump barrel 10, which may conveniently be molded or cast from a substantially rigid material such as vinyl plastic. The pump barrel 10 is of hollow tubular construction so that its interior defines a pump cylinder 11 and it will be seen that the barrel at its upper end is centered in and opens through a circular central opening 13 within the container cap 12. The particular manner in which the barrel is so mounted will be more fully described hereinafter.

Depending from the lower end of the barrel is a suction tube 14, which may be of plastic or other usual material. It will be understood that the lower end of such tube, which is broken away in the present drawings, will depend into the liquid within the container to a point closely adjacent to the bottom of the container whereby the liquid contents may be withdrawn and dispensed through the pump structure of the invention. The upper end of the tube 14 is received and frictionally or otherwise retained in a depending sleeve portion 16 integral with the pump barrel.

Also formed integrally with and communicating with the interior of the pump barrel at its lower end is a foot valve cage or housing 18 formed with an inclined annular valve seat 20 for cooperation with a foot valve element exemplified by the ball valve 22. It will be noted that the inwardly projecting valve seat portion 20 has a lower surface abutting against and thereby serving to position the upper end of the suction tube 14. The ball valve 22 may, if desired, be guided in its seating and unseating movement by a plurality of guide ribs 24 and its unseating movement is preferably limited by overlying inwardly projecting retainers or detents 26. These retainers have their inner ends disposed about a circle of very slightly smaller diameter than that of the ball valve 22. How-

ever, the plastic vinyl or other material from which the pump barrel is formed has sufficient inherent resiliency so that it may be expanded sufficiently to permit forcing the ball 22 downwardly past these retainers into the valve cage 18, during assembly of these parts.

Disposed for reciprocation within the pump barrel is a generally tubular plunger 28, which also may be formed of vinyl or other plastic material. It will be noted that the upper end of this plunger projects upwardly through the open upper end of the barrel 11 and above the container cap 12, where it carries a cap-like plunger discharge head 29.

At its lower end the plunger carries a piston consisting essentially of an inverted cup having downwardly and outwardly flaring skirt 30 in snug sliding engagement with the inner cylinder wall 11 of the pump barrel. In the embodiment shown, the piston 30 includes an upper sleeve extension 32 which is press-fitted into the lower end of the plunger or otherwise retained therein. Preferably, the several parts of the piston are integrally constructed of resilient material such as polyethylene plastic, whereby the lower edges of the piston skirt 30 may tend to resiliently expand into fluid-tight engagement with the inner wall 11 of the barrel and thereby function more efficiently.

At its lower end, the piston 32 carries a downward extension or probe 34, which, in this embodiment, is of downwardly opening tubular construction, the arrangement being such that a passage 36 extends completely through the piston from the lower end of the probe upwardly into communication with the tubular interior of the plunger 28 to provide a discharge passage portion connecting with the tube 14 through the intermediary of the foot valve 18.

For the purpose of raising the plunger 28 on its upstroke, there is provided a coil spring 38 disposed concentrically about the probe 34 under compression between the piston and the lower end of the cylinder within the pump barrel. An upwardly presented annular shoulder 39 on the plunger is disposed for abutting engagement with the wiper ring 73, more fully described hereinafter, to limit the upward stroke of the plunger.

In order that such fluid as may escape upwardly past the piston 30 may be returned into the container, there is provided a usual breather passage or passages 40 through the side of the barrel 10 just below the horizontal web of the container cap 12 and its associated sealing structure. Such port or ports 40 establish communication between the interior of the container and the interior of the pump barrel above the piston to permit return flow of the fluid, and also permit air from the container to flow into and from the barrel above piston 30, thus preventing an air lock such as might interfere with the plunger reciprocation.

Adjacent its upper end, the plunger 28 is provided with an additional valve seat 41 on which is seated a ball check valve 42 arranged to permit upward flow of fluid from the plunger head. The plunger discharge head 29 is shown as being in form of an inverted cup-like member having its depending skirt receiving and enclosing the open upper end of the plunger tube 28. The closed upper end 46 of the plunger discharge head is formed as a finger piece of suitable shape to permit actuation of the pump by repeatedly depressing it against the resilient force of its spring 38 and subsequently removing the finger pressure to permit the spring to return the plunger to its raised position. Internally the plunger head is formed with a depending stop 52 to limit unseating movement of ball 42.

It will be noted that when the plunger is fully depressed and in its immobilized position, as shown in Figure 1, the probe 34 at the lower end of the plunger will engage and force the ball valve 22 against its seat 20 and the ball valve thus will coact with both the seat 20 and the free end of the probe 34 to close off both against the passage of liquid.

The lower end of the plunger head 29 terminates externally of the plunger tube 28 in an annular sealing ring or skirt 48, the lower outer periphery or lip of which constitutes a sealing surface which is adapted for engagement and cooperation with an annular sealing surface 76 concentrically surrounding and spaced from the upper end of the pump barrel for preventing escape of fluid upwardly between the pump barrel and plunger, such as might otherwise occur, for instance, in the event the pump and its container are inverted or partially inverted, and the fluid contents of the container thus permitted to flow through the breather ports 40 into the space between the plunger and pump barrel. If desired, the sealing surface or periphery 49*a* of the plunger skirt may be formed parallel to the conical sealing surface 76, as in the modification of Figure 3, for flush wedging engagement between said surfaces. Or, if desired, and as shown in Figure 4, the peripheral sealing surface 49*b* may be formed as a knife edge for yielding line engagement with the surface 76.

It will be seen that on the upstroke of the plunger and plunger head the ball valve 42 will remain seated to apply suction, drawing liquid upwardly through the tube 14, the ball valve 22 being thereby unseated to permit passage of such liquid into the plunger tube 28. Then, as the plunger and plunger head are depressed, the wall valve 22 will reseat to prevent return flow of the liquid and the ball valve 42 will be opened to permit upward flow of the liquid into the plunger head 29 and thence outwardly through the discharge port or opening 54 in the side wall of the plunger head. While the discharge port 54 may communicate directly with the atmosphere, in the present embodiment it is shown as delivering the fluid into a spray nozzle structure for ejection in the form of a spray. To this end there is provided an annular recess 56 around the outer end of this discharge opening or port, said recess being defined by an annular radially-projecting wall 57, having its radially projected periphery 57' disposed on the surface of an imaginary cone to provide a sealing surface for cooperation with the conical interior of the protective cap as hereinafter described. Pressed into and frictionally retained or cemented within the annular recess 56 is a spray disc 58 having a spray discharge orifice 62, which receives fluid from the discharge passage 54 through usual tangential whirl passages 59 and an annular distributing passage 60.

Reverting now to the connection between the pump barrel 10 and container cap 12, such connection is defined in the preferred embodiment by an annular plastic member 64 cemented or otherwise secured around the upper end of the pump barrel for disposition beneath the horizontal web of the container cap and for clamping between said cap and the upper end or lip of the container neck on which the cap is to be applied. A suitable gasket 66 may be applied over the under-face of the member 64 for sealing engagement with the bottleneck or lip. Formed integrally with the member 64 is an upstanding annular wall 68 which projects upwardly through the central cap opening 13 for connection to the annular collar or adapter member 70, being preferably received and frictionally retained or cemented in a downwardly presented annular groove 72 in the collar 70, so that the cap 12 is effectively clamped between members 70 and 64. The lower end of the collar may conveniently support the wiper ring 73 hereinbefore referred to for sliding wiping engagement with the plunger tube 28 and for abutting engagement with the shoulder 39 of the plunger tube to limit the upward movement of the plunger. The inner wall 76 of the collar above the wiper ring 73 preferably converges downwardly in the form of a conical sealing surface spaced from the plunger tube for reception of and sealing engagement with the depending annular sealing skirt 48 of the plunger head. The skirt 48 and plunger head are both preferably formed integrally of a resilient plastic such as polyethylene and the collar 70 is prefer-

ably formed of a substantially rigid material such as vinyl plastic. The annular outer wall 80 of the collar is formed externally with screw threads 82 for cooperation with internal screw threads 84 on the depending inner wall portion of the protective cap 86. It will be seen that the cap 86 is disposed over the upper end of the plunger and plunger head and that its upper end engages the finger piece 46 to depress the plunger head and plunger to immobilized position as shown in Figure 1 when the cap 86 is threaded tightly onto the collar 70.

It will be apparent that frictional engagement between the skirt 48 and surface 76 may be relied upon, at least temporarily, to maintain the plunger in its depressed immobilized and sealed condition, even in the absence of the protective hold-down cap 86.

In order to effect a liquid tight sealing engagement between the cap 86 and the collar 70, the collar is formed with an upwardly presented groove 88 inwardly of its threaded outer wall 80 for reception of a depending annular sealing ring 90 on the cap. The dimensions of the groove and sealing ring are so related that the sealing ring 90 preferably makes a jamming fit into the groove 88.

It is preferred that the cap 86 be of resilient material in order that its conical interior sealing surface 92 may form a fluid tight sealing engagement with the conical peripheral surface 57' of the spray head and also so that its sealing ring 90 may form a yielding fluid tight fit within the groove 88. Where the cap is thus formed of resilient plastic, however, it is subject to the usual and known difficulty that excessive tightening of the cap, as by automatic capping mechanism, may tend to expand the lower edge of the cap skirt so that the threads 84 of the cap will override and become disengaged from the threads 82 on the collar. However, the depending ring or skirt 90, in addition to performing its sealing function, will resist such expansion tendency and thus adapt the resilient material caps for efficient application by automatic capping mechanism.

For the purpose of automatically centering the protective cap 86 and guiding its threaded skirt accurately onto the threads of the collar 70, there is provided on the plunger head a radially projected boss 94, the radially outer end of which lies on a common cone with sealing surface 57' and cooperates with the projecting conical periphery 57' to engage the conical inner surface of the cap and center same coaxially with respect to the plunger and the collar. Moreover, the plunger and plunger head are both rotatable together with respect to the barrel 10 and container cap 12 and will thus facilitate threading of the protective cap 86 onto the collar 70.

In the operation of the embodiment just described, it will be apparent that the pump structure, the threaded container cap 12 and the protective cap 86 may be preassembled as a unit as in Figure 1 and thereafter applied to a bottle or other liquid container in obvious manner. In such event the ball 22 of the foot valve will be seated by engagement with the lower end of the tubular probe 34 and thus will prevent upward movement of any of the container contents past the valve seat or into the plunger. While possibly liquid may be permitted to enter the space between the plunger and its barrel through port or ports 40 incident to inversion of the container, expansion of its contents, or leakage past the piston 30, the sealing engagement of the plunger head sealing ring 48 with the inner conical surface 76 of the collar 70 will normally prevent accidental escape of the fluid beyond this point. In the event, however, that the seal provided by the ring 48 should be imperfect, then any fluid which escapes will nevertheless be maintained and confined in the protective cap 86 by the action of the seal 90. Similarly, the cooperation between the conical surfaces 92 and 58' of the protective cap and plunger head respectively will normally prevent escape of fluid from the plunger interior, though if any leakage should occur, it also would be contained within the cap 86.

After the pump has been used, it will be seen that a certain amount of residual liquid will tend to remain in the hollow plunger barrel, and when this plunger is then depressed incident to application of the protective cap 86, this will tend to expel such residual liquid outwardly from the discharge head 29. However, it will be noted that, immediately upon application of the cap 86 over the spray head, the cooperation between the conical sealing surfaces 92 and 57 is rendered operative to resist such liquid discharge, and such cooperation is in fact improved by the pressure exerted on the cap in thus depressing it.

Moreover, the conical surface 57' and the boss 94 will coact with the conical inner surface 92 of the cap to center the latter, and the rotatably disposed plunger accurately guides the threaded skirt of the cap onto the threaded collar 70, while permitting free rotation of the cap during its application to the collar.

Because of the axial disposition of sealing surface 76, it will be apparent that this surface will coact with the skirt or ring 48 to provide an effective seal for preventing leakage between the pump plunger and barrel throughout a substantial range of axial positioning of these parts, thereby permitting substantial manufacturing tolerances. Thus the seals 48—76 and the seal provided by cooperation between the plunger and foot valve 18, will effectively prevent leakage, both between the plunger and barrel and through the plunger, in the depressed and immobilized position of the plunger. Moreover, such position may be maintained either through the protective cap 86 or through the frictional action of the seals 48—76 as heretofore mentioned.

In the form of the invention shown in Figure 5, the structure and function are identical to those heretofore described, except as to the arrangement of the plunger piston and probe and the cooperation of these parts with the foot valve. Accordingly, parts which are identical to those in the structure heretofore described are identified by similar reference characters, while modified parts or elements are herein identified by distinctive reference characters. Thus, in the modification of Figure 5, the plunger piston 30' consists basically of the downwardly flaring skirt of resilient plastic material, as heretofore, and includes an annular collar 36' by which it is supported in the lower end of the plunger tube 28. In this modification, however, the probe 34' is closed at its lower end and is surrounded by and includes a flaring resilient piston skirt 33 for snug fluid tight reception in the upper portion of the valve cage 18' in the depressed position of the valve plunger. Above the piston skirt 33 the probe 34' is hollow and is provided with one or more outwardly opening ports 35, so that when the piston skirt or plug 33 is withdrawn upwardly from the valve cage and into the relatively greater diameter pump barrel, the fluid is free to pass upwardly around the plug 33 and into the plunger barrel through the ports 35 incident to reciprocation of the plunger. In this, as well as in the preceding embodiment, it is apparent that the probes 34—34' coact with the foot valve, though in somewhat different manners, to arrest the upward flow of the fluid from the tube 14 when the valve plunger is fully depressed. In addition, in each of these modifications the probes 34 and 34' may be used during assembly of the foot valve to force the valve element or ball 22 downwardly into its cage past the detainers or detents 26 or 26'.

It will be appreciated that reference herein to a vertical disposition of the pump and of its principal parts, and to upper and lower locations and positions of component parts, is employed merely for convenience in describing and claiming the structure embodying the invention. While the pump normally occupies a generally upright position, it is, of course, usable when held in various other positions.

In this application, we have shown and described only

the preferred embodiment of our invention and a simple modification thereof, in order to illustrate the best mode presently known to us of carrying out our invention. However, we realize that the invention is capable of other and different embodiments and its several details may be altered in various respects, although without departing from our invention. Accordingly, the drawings and description herein are to be construed as merely illustrative in nature and not as restrictive.

Having thus described our invention, we claim:

1. A liquid dispensing pump comprising a generally vertical cylindrical barrel, an annular collar secured concentrically around the upper end of said barrel, a plunger reciprocally disposed in said barrel and projecting from the upper end of said barrel, the upper end of said plunger constituting a discharge head and having a liquid passage opening therethrough to define a discharge port, spring means coacting between said barrel and said plunger for urging the plunger upwardly from the barrel, a foot valve in the lower end of said barrel for permitting upward flow of liquid into said barrel, while preventing downward flow of said liquid and a probe carried at the lower end of said plunger for closing said valve in a predetermined position at the lowermost extremity of the reciprocating movement of said plunger, in combination with annular sealing surfaces formed on said collar and said plunger respectively, externally of the plunger for operative sealing engagement in said predetermined position of the plunger, to prevent upward leakage of liquid between the barrel and plunger, said liquid passage extending from said discharge port downwardly through said plunger and its said probe for normal communication with and control by said foot valve.

2. The liquid dispensing pump of claim 1, wherein said foot valve comprises a valve ball and a cylindrical valve cage confining said valve ball and of smaller diameter than the interior of said pump barrel and said plunger, and normally communicating at its upper end with the interior of said barrel, said plunger including a piston snugly reciprocally received in said pump barrel above said probe, said probe carrying a plug at its lower end for reception in said valve cage, said passage extending downwardly through said piston and opening between said piston and said plug.

3. A liquid dispensing pump as defined in claim 2, wherein said foot valve includes a valve ball operatively disposed in said valve cage, said cage having an inwardly projecting retainer above said valve ball for limiting the unseating movement thereof, and said probe depending to a sufficient extent in the said predetermined position of the plunger to press said valve ball from above to beneath said retainer for assembly purposes, said valve cage being formed of a material having sufficient elasticity to permit the displacement of said retainer incident to assembly of the valve ball.

4. A liquid dispensing pump as defined in claim 1, including means on said plunger for selectively securing said plunger in its said predetermined position of reciprocation.

5. A liquid dispensing pump as defined in claim 4, wherein said means comprises a cap having a threaded skirt, and threads on said collar for cooperation with said threaded skirt.

6. A liquid pump as defined in claim 1, wherein one of said annular sealing surfaces extends and converges downwardly for jamming frictional engagement with the other of said annular sealing surfaces, sufficiently to frictionally maintain the plunger in said predetermined position.

7. The combination defined in claim 6, wherein said one sealing surface is formed on the said collar for concentric reception of the sealing surface carried by the plunger discharge head, said discharge head carrying a depending downwardly and outwardly flaring resilient skirt having its downwardly and outwardly flaring periphery defining the said sealing surface of the discharge head.

8. The combination defined in claim 7 in which said outwardly flaring periphery is formed with a downwardly diverging conical surface for flush sealing wedging engagement with said one sealing surface.

9. A liquid dispensing pump as defined in claim 1, wherein said foot valve includes a valve cage communicating at its upper end with said pump barrel, and a valve ball movable downwardly in said cage to close said valve, said probe depending from the plunger to such extent as to engage and maintain the valve ball in valve closing position in said predetermined position of the plunger.

10. A liquid dispensing pump as defined in claim 9, wherein said liquid passage opens through said probe in position to be covered and closed by engagement of the probe with the valve ball.

11. In a fluid dispensing pump, the combination with a generally vertical cylindrical pump barrel having at its upper end a collar having threads thereon, of a plunger reciprocally disposed in said barrel and having at its upper end and above said collar a discharge head having a discharge orifice for fluid, spring means acting between said barrel and plunger for urging said plunger upwardly in said barrel, a check valve associated with said barrel to prevent downward movement of fluid therein, said plunger being forced to provide a discharge passage extending therethrough and communicating with said discharge orifice, a protective cap dimensioned to embrace said discharge head, said cap having a skirt for engagement with the threads on said collar to hold said plunger in a depressed and immobilized position against the action of said spring means, coacting sealing surfaces on said plunger and collar, said sealing surfaces being engaged when said cap is threaded on said collar to seal said barrel to prevent leakage externally of said plunger, means operable when said plunger is depressed and immobilized to seal said discharge passage to prevent leakage internally of said plunger, said last named means comprising a sealing ring surrounding said discharge orifice and having a contour conforming with the contour of the interior surface of said cap and positioned for sealing engagement with said cap in the depressed and immobilized position of said plunger, and coacting sealing surfaces on said cap and collar to contain within said cap liquid escaping from a defective seal either externally or internally of said plunger.

12. In a fluid dispensing pump, the combination with a generally vertical cylindrical pump barrel having at its upper end a collar having threads thereon, of a plunger reciprocally disposed in said barrel and having at its upper end and above said collar a discharge head having a discharge orifice for fluid, spring means acting between said barrel and plunger for urging said plunger upwardly in said barrel, a check valve associated with said barrel to prevent downward movement of fluid therein, said plunger being formed to provide a discharge passage extending therethrough and communicating with said discharge orifice, a protective cap dimensioned to embrace said discharge head, said cap having a skirt threaded for engagement with the threads on said collar to hold said plunger in a depressed and immobilized position against the action of said spring means, coacting sealing surfaces on said plunger and collar, said sealing surfaces being engaged when said cap is threaded on said collar to seal said barrel to prevent leakage externally of said plunger, means operable when said plunger is depressed and immobilized to seal said discharge passage to prevent leakage internally of said plunger, said last named means comprising a sealing ring surrounding said discharge orifice and a contour conforming with the contour of the interior surface of said cap and positioned for sealing engagement with said cap in the depressed and immobilized position of said plunger, said plunger having means for engaging said check valve and retaining the same in closed position when said plunger is depressed and immobilized, and

coacting sealing surfaces on said cap and collar to contain within said cap liquid escaping from a defective seal either externally or internally of said plunger.

13. In a fluid dispensing pump, the combination with a generally vertical cylindrical pump barrel having at its upper end a collar having threads thereon, of a plunger reciprocally disposed in said barrel and having at its upper end and above said collar a discharge head, spring means acting between said barrel and plunger for urging said plunger upwardly in said barrel, valve means associated with said barrel and plunger to prevent downward movement of fluid therein, said plunger being formed to provide a discharge passage extending therethrough and communicating with said discharge head, a protective cap dimensioned to embrace said discharge head, said cap having a skirt threaded for engagement with the threads on said collar to hold said plunger in a depressed and immobilized position against the action of said spring means, coacting sealing surfaces on said plunger and collar, said sealing surfaces being engaged when said cap is threaded on said collar to prevent leakage from said barrel externally of said plunger, means operable when said plunger is depressed to seal said discharge passage to prevent leakage from said barrel internally of said plunger, said last named means comprising a sealing ring surrounding said discharge orifice and having a contour conforming with the contour of the interior surface of said cap and positioned for sealing engagement with said cap in the depressed and immobilized position of said plunger, and coacting sealing surfaces on said cap and collar, said last named surfaces being engaged when said cap is threaded on said collar.

14. In a fluid dispensing pump, the combination with a generally vertical cylindrical pump barrel having at its upper end a collar having threads thereon, of a plunger reciprocally disposed in said barrel and having at its upper end and above said collar a discharge head, spring means acting between said barrel and plunger for urging said plunger upwardly in said barrel, valve means associated with said barrel and plunger to prevent downward movement of fluid therein, said plunger being formed to provide a discharge passage extending therethrough and communicating with said discharge head, a protective cap dimensioned to embrace said discharge head, said cap having a skirt threaded for engagement with the threads on said collar to hold said plunger in a depressed and immobilized position against the action of said spring means, coacting sealing surfaces on said plunger and collar, said sealing surfaces being engaged when said cap is threaded on said collar to seal said barrel to prevent leakage externally of said plunger, means operable when said plunger is depressed and immobilized to seal said discharge passage to prevent leakage internally of said plunger, and coacting sealing surfaces on said cap and collar, said last named surfaces being engaged when said cap is threaded on said collar and comprising a depending concentric annular flange on said cap, said collar being formed to provide a concentric annular groove dimensioned to receive said flange with a snug fit.

15. In a fluid dispensing pump, the combination with a generally vertical cylindrical pump barrel having at its upper end a collar having threads thereon, of a plunger reciprocally disposed in said barrel and having at its upper end and above said collar a discharge head, spring means acting between said barrel and plunger for urging said plunger upwardly in said barrel, valve means associated with said barrel and plunger to prevent downward movement of fluid therein, said plunger being formed to provide a discharge passage extending therethrough and communicating with said discharge head, a protective cap dimensioned to embrace said discharge head, said cap having a skirt threaded for engagement with the threads on said collar to hold said plunger in a depressed and immobilized position against the action of said spring means, said discharge passage opening radially through said discharge head, said head being formed to provide a sealing surface defining a portion of a downwardly diverging cone surrounding said opening, the conical axis of said sealing surface being coincident with the axis of the threads on said collar, said cap being formed internally with a sealing surface of similar conical configuration, whereby turning of the cap onto said collar effects sealing engagement between said sealing surfaces.

16. A fluid dispensing pump comprising a generally vertical cylindrical pump barrel having at one end thereof a collar having threads thereon, a plunger reciprocally disposed in said barrel and having at its upper end and above said collar a discharge head, spring means acting between said barrel and plunger for urging said plunger upwardly in said barrel, valve means seating in said barrel below said plunger to prevent downward movement of fluid in said barrel, said plunger being formed to provide a discharge passage extending therethrough and communicating with said discharge head, a protective cap dimensioned to embrace said discharge head, said cap having a skirt threaded for engagement with the threads on said collar to hold said plunger in a depressed and immobilized position against the action of said spring means, coacting sealing surfaces on said plunger and collar, said sealing surfaces being engaged when said cap is threaded on said collar to prevent leakage from said barrel externally of said plunger, means operable when said plunger is depressed and immobilized to seal said discharge passage to prevent leakage from said barrel internally of said plunger, said last named means including a probe at the lower end of said plunger forming a continuation of said discharge passage, said probe being formed to provide a seat engaging said valve means to hold the latter in the seated position in said barrel when said plunger is depressed and immobilized, whereby said valve means blocks both said barrel and said discharge passage, and coacting sealing surfaces on said cap and collar to contain within said cap liquid escaping from a defective seal either internally or externally of said plunger.

17. A fluid dispensing pump comprising a generally vertical cylindrical pump barrel, a plunger reciprocally disposed in said barrel and having at its upper end a discharge head, spring means acting between said barrel and plunger for urging said plunger upwardly in said barrel, valve means seating in said barrel below said plunger to prevent downward movement of fluid in said barrel, said plunger being formed to provide a discharge passage extending therethrough and communicating with said discharge head, means acting between said plunger and said barrel to hold said plunger in a depressed and immobilized position against the action of said spring means, means operable when said plunger is depressed and immobilized to seal said discharge passage to prevent leakage from said barrel internally of said plunger, said last named means including a probe at the lower end of said plunger forming a continuation of said discharge passage, said probe being formed to provide a seat engaging said valve means to hold the latter in the seated position in said barrel when said plunger is depressed and immobilized, whereby said valve means blocks both said barrel and said discharge passage, and coacting sealing surfaces on said cap and collar to contain within said cap liquid escaping from a defective seal either internally or externally of said plunger.

18. In a fluid dispensing pump, the combination with a generally vertical cylindrical pump barrel having at its upper end a collar having threads thereon, of a plunger reciprocally disposed in said barrel and having at its upper end and above said collar a discharge head having a discharge orifice for fluid, spring means acting between said barrel and plunger for urging said plunger upwardly in said barrel, a check valve associated with said barrel to prevent downward movement of fluid therein, said plunger being formed to provide a discharge passage extending

536





therethrough and communicating with said discharge orifice, a protective cap dimensioned to embrace said discharge head, said cap having a skirt threaded for engagement with the threads on said collar to hold said plunger in a depressed and immobilized position against the action of said spring means, coacting sealing surfaces on said plunger and collar, said sealing surfaces being engaged when said cap is threaded on said collar to seal said barrel to prevent leakage externally of said plunger, means operable when said plunger is depressed and immobilized to seal said discharge passage to prevent leakage internally of said plunger, said last named means comprising coacting sealing surfaces relatively displaced into engagement when said cap is threaded on said collar to block flow of liquid through the discharge passage and hence to said orifice, and coacting sealing surfaces on said cap and collar to contain within said cap liquid escaping from a defective seal either externally or internally of said plunger, the coacting sealing surfaces of each of said seals being angularly disposed with respect to the axis of the plunger, whereby pressure is applied between said surfaces when said cap is threaded down on the collar.

19. A fluid dispensing pump as claimed in claim 18 in which said means operable to seal said discharge passage comprises a probe carried by said plunger and engaging said check valve on depression of said plunger to hold said valve in seated position.

20. A fluid dispensing pump as defined in claim 18, wherein said fluid discharge passage opens radially through said discharge head, said head including a conical downwardly diverging sealing surface surrounding said opening,



the conical axis of said conical sealing surface being coincident with the axis of said threads on said cap and said collar respectively, said cap being formed internally with a similar conical sealing surface, whereby turning of the cap onto said collar will automatically interengage the said conical sealing surfaces, said discharge head having on its diametrically opposite sides from its said sealing surface a radially projecting boss, the outer end of which lies on a common cone with said sealing surface of the said head to coact with said last mentioned sealing surface for centering said cap relative to said discharge head and for positioning the threaded skirt thereof concentrically to the threads around said collar, said plunger and its discharge head being rotatable in said barrel about an axis coincident with the generatrix of said threads for facilitating the application of said cap to said threaded collar.


References Cited in the file of this patent

UNITED STATES PATENTS

| | | |
|---|---|---|
| 1,486,600 | Nuhring | Mar. 11, 1924 |
| 2,024,570 | Fischman | Dec. 17, 1935 |
| 2,119,884 | Lobse | June 7, 1938 |
| 2,586,687 | Mellon | Feb. 19, 1952 |
| 2,657,834 | Bacheller | Nov. 3, 1953 |
| 2,684,182 | Gey | July 20, 1954 |
| 2,870,943 | Scoggin | Jan. 27, 1959 |

FOREIGN PATENTS

| | | |
|---|---|---|
| 256,416 | Switzerland | Feb. 16, 1949 |

DEFENDANT'S EXHIBIT 150

537

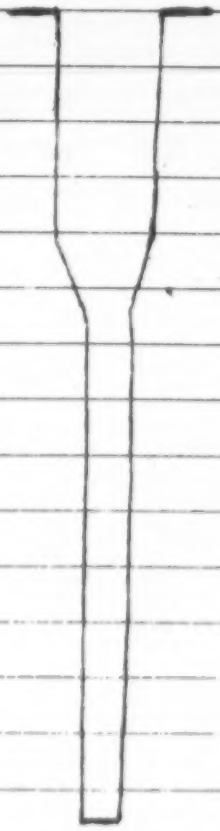

D Id's Wise En 4 Id

[illegible] 5/25/60

DEFENDANT'S EXHIBIT 160

538

CALMAR, INC. - CUSTOMER CONTACT REPORT

| SALES DIVISION | | | |
|---|---|---|---|
| Visit | Phone | Date 3/11 | Date Written 3/12 |
| CALMAR PERSONNEL | | | |

INDUSTRY Chemical
APPLICATION Liquid
CALMAR PRODUCT S25LP
COMPETITION

CINCINNATI ROUTING
J. BOEHM
~~R. WISE~~ JRB
~~G. ARMSTRONG~~
FILE

FIRM NAME IN FULL-DO NOT ABBREVIATE-INDICATE DIVISION IF ANY
S. C. Johnson & Son, Inc.
PHONE NO.
STREET
CITY
Racine, Wis
ZONE
STATE
PERSONS INTERVIEWED AND POSITIONS
J. Luyster, C. Lachr
B. Pettibone

ACTION
☐ Taken
☐ Requested

#1

As collation report from Johnson shows a noticeable improvement but not satisfaction when percentages are still high.

They are in process of changing our liners but too, first they have to move real fast to do something to improve the 1970 cap leakage and ordered while I was there 5000 cork liners to test - thickness of cork to be roughly 30 thousand thickness. If it proves satisfactory they will change liners again -

I feel that we should test cork liners at once so this won't be a one sided effort and we may have an answer of or two.

Too, they still have some interest in a smaller diameter flange to test out.

As you know B. Pearson has a smaller flange and a poly liner like our regular liner - and they have one can on test with B. Pearson and cap is [illegible]

Form No. SC - 1011 - 757

Dalds Wise 15 Sd
Form 5-25-60

539

# CALMAR, INC. - CUSTOMER CONTACT REPORT

| SALES DIVISION | | | |
|---|---|---|---|
| VISIT | PHONE | Date | Date Written |
| CALMAR PERSONNEL | | | |

| INDUSTRY |
|---|
| APPLICATION |
| CALMAR PRODUCT |
| |
| |
| COMPETITION |

| CINCINNATI ROUTING | |
|---|---|
| J. BOEHM | |
| R. WISE | |
| C. ARMSTRONG | |
| | |
| FILE | |

FIRM NAME IN FULL-DO NOT ABBREVIATE-INDICATE DIVISION IF ANY PHONE NO.

S. C. Johnson & Son, Inc.

STREET CITY ZONE STATE

Racine, Wis

PERSONS INTERVIEWED AND POSITIONS

ACTION ☐ Taken ☐ Requested

#2

leaking.

I was told Tuesday that if $2,000,000 in sales of product and related products were not involved that entire project would be wasted out - they are in the middle and have to keep going.

That is why they have to exchange lines and do some filling as delivery dates of product are involved & as I stated - if cable is satisfactory, all units will be charged again.

I am shipping a continuous with a cellulose cover over [illegible], it cannot be made to include the cap area.

As you can see the cap leakage is still to serious to gamble with, [illegible] trying to improve it.

100 plus are meant that [illegible] sample requisition as it may be used on large size [illegible] and we may get an order on this size for 10,000 units.

Form No. SC-1011-757

DEFENDANT'S EXHIBIT 162

540

CALMAR, INC. - CUSTOMER CONTACT REPORT

| SALES DIVISION | | | |
|---|---|---|---|
| Visit X | Phone | Date 5/19/58 | Date Written 5/20/58 |
| CALMAR PERSONNEL | | | |

INDUSTRY Chemical
APPLICATION Liquid
CALMAR PRODUCT S 25 L P
COMPETITION

CINCINNATI ROUTING
J. BOEHM JB
~~[illegible]~~ JRB
~~G. ARMSTRONG~~ [illegible]
FILE

FIRM NAME IN FULL-DO NOT ABBREVIATE-INDICATE DIVISION IF ANY PHONE-NO.
S. C. Johnson & Son, Inc.

STREET CITY ZONE STATE
Racine, Wisconsin

PERSONS INTERVIEWED AND POSITIONS
J. Luyster, R. Petterson
B. Pettibone

ACTION ☐ Taken ☐ Requested

Subject
Raid VS Plastics

Serious problems are developing. Shipping under separate cover representative parts showing defects.

Pettibone, by testing, has come to a conclusion that the Sprayer in lock position in product - is causing the piston to split. The spring tension is holding cup washer in position and attaching product (Raid) is swelling the washer and causing outward pressures resulting in split piston.

Too, in correlating the above results; pistons and attached cup washers have been placed in product and no split pistons have developed. Implying that cup washer pressures are being exerted downward or else cup washer can move down out of friction fit position.

Pettibone suggests that we consider designing the cup washer to fit on outside diameter of piston.

A figure of 50%, of 100,000 units re-worked in their plant showing these conditions, was mentioned to me. If, so, I just can't see how they will come out of the retail market with a clean shirt. Too, they admitted that much more product could have moved this season but the brakes were applied to the promotion.

Norm Davis

P S The end is still around the corner.

NK

Form No. SC - 1011 - 757

Dell's Wise Ex 16 Id
5/25/60

541

[1211] DEFENDANT'S EXHIBIT 198.

CALMAR, INC.

December 18, 1957

Development Committee Meeting of December 17th

Present: R. Cooprider, T. Covington, H. Harnage, J. Martin, J. Noblett, W. Roots, J. Stewart, R. Wise

R. Wise reported that 500 samples D510 most recently forwarded to Cincinnati lab for testing and evaluation had performed satisfactorily. D510 could now be considered approved for production.

Any requests for samples of D510 must be approved by R. Wise before supplying.

R. Wise requested the following D510 samples be produced as quickly as possible and shipped on instructions he will furnish later.

100 D510—50 each "Standard" Ivory & Lanolin Plus Turquoise Outer Bodies
All inner bodies "Standard" Ivory
50 with Turquoise Rubber Bulbs
50 with Turquoise Vinyl Bulbs

Additional

500 D510—All Inner Bodies "Standard" Ivory Vinyl
Outer Bodies Assorted Colors to be advised
Vinyl Bulbs Assorted Colors to be advised

J. Stewart to provide "Avon" colors for 100 of the above Outer Bodies & Bulbs. These "Avon" samples to be ready prior to January 15th Sales Meeting.

R. Wise will explore with Jerry Kay the possibility that a revised Flexible vinyl formulation may be developed to overcome the "Leaching and Hardening" experienced in prior tests with Lanolin Plus products.

H. Harnage to furnish the following as soon as possible:

Revised tooling cost for production of Outer Bodies
" " " " " " Inner Bodies
" " " " " " Vinyl Bulbs
" " " " " " Rubber Bulbs

Estimated cost of assembly jigs etc. required

Revised cost for production and assembly of D510 components

Productive capacity for all the above.

The best possible target date for volume production of D510

[1212] Rex Cooprider to furnish at the earliest possible date detailed specification sheets for the approved D510.

---

"Leakproof Sprayers"

R. Wise reported that Colgate rejected our "Leakproof Boots" and expressed preference for "Bakan" appearance. Would, however, prefer that item be a true leakproof sprayer rather than just a "shipping closure" as produced by "Bakan".

All present were requested to give some thought to a "true leakproof sprayer" similar in general appearance to "Bakan".

All of the foregoing necessitated by the failure of our present S25/LP to "seal" many low viscosity products.

R. Wise reported S. C. Johnson gave favorable reception to leakproof boot, but all samples submitted so far failed in compatibility tests with Johnson's "Raid".

H. Harnage obtaining new vinyl compound from Maclin developed to be compatible with "Raid".

When compound available, "Windex" sprayers with "Boots" of new compound to be forwarded to H. Wise for compatibility tests with "Raid".

J. Stewart reported Wilco interest in "Boot" for "Biff Ant and Roach" requirement 50-75M per year.

H. Harnage to provide soonest availability and cost of 50-75M per year vinyl "Boots" so that he and J. Stewart can submit to Wilco.

R. Wise advised last samples of vinyl "boots" forwarded to Cincinnati lab for compatibility tests are still under test—no results yet available.

Consideration to be given to Rex Cooprider suggestion for "molding" closed ends on "boots" to eliminate sealing problems.

RS10/LP request (25M) by E. Spencer was discussed and rejected because of small volume potential.

Rex Cooprider reported on project "Eliminating" need for collar on S25-D250 etc.—requested permission to further develop on premise that smaller diameter piston would be acceptable.

[1213] Further consideration to be given to possibility that project can be successfully completed using present piston diameter of Cycolac material.

Rex was particularly requested by R. Wise to spend some time on the "Genuinely Leakproof-High Aesthetic Appeal" leakproof sprayer—see earlier notes.

Rex to develop "Fine Mist Sprayer of White Cycolac" employing S25 components except head which is to be "O" type. 100 of same to be forwarded to R. Wise in time for January 15th Sales Meeting—employing 30MM Black Molded Caps and Windex 6-oz. length specification.

Rex was instructed by R. Wise to be responsible for weekly "Development Steering Meetings". If possible meetings to be attended by H. Harnage, Ott Duda, Rex Cooprider and J. Stewart every Friday Morning at 8:00. Rex to report to R. Wise weekly regardless of attendance at meetings. Miss Newhall will provide any secretarial assistance he requires.

Rex to provide for R. Wise in time for his return to Cincinnati samples of "Calmar Aerosol Valves" hand fabricated. Both loose components and finished valves assembled to loaded "Blue Mist Windex".

R. Wise will investigate possibility of patent protection on this new project.

R. Wise reported Colgate interest in aerosol valves as per patent drawings:

| | |
|---|---|
| D. Michel | 2,612,293 |
| A. S. Lapin | 2,704,172 |
| J. W. Soffer | 2,643,015 |
| H. F. Tomasek | 2,615,597 |

Similar to either of the valves and covers described by patents.

R. Wise advises he would discuss the patents involved with our attorney and report back.

cc: Those Present
O. Duda

544

[1214] DEFENDANT'S EXHIBIT 200.

CALMAR, INC.

TO: All Department Heads

FROM: R. D. Wise November 20, 1958

SUBJECT: The SS-40 Shipper Sprayer

The purpose of this report is to tell you of the development of the new SS-40 sprayers and to answer some of the many questions that you have been asking about it.

Overall marketing experience by sprayer manufacturers indicated a growing need for an improved shipper sprayer. A new sprayer which would be the safest possible shipping closure, easy to operate, more compact, as attractive to the consumer as aerosals and at the lowest possible cost—this is what our customers demanded and this is what we have developed in the SS-40 sprayer.

In recent weeks, many questions have been asked about the new sprayers. Questions and available answers are listed below:

## WHY THE NAME SS-40?

The "SS" means "Shipper Sprayer". The #40 has no real meaning. However, it is an indication of the large number of changes made in configuration and tooling before the final product was adopted. Further "SS-40" does not conflict with any other product identification.

## WHAT IS NEW ABOUT THE SS-40 SPRAYER?

The SS-40 sprayer has built-in integral seals to resist leakage. The seals are closed in final assembly. Other presently available sprayers do not have these built-in seals. The sprayers presently available and with which we are familiar have three points of leakage. For example:

[1215]

| Present Sprayer Leakage Problem | SS-40 Sprayer Corrective Seal |
|---|---|
| A. Leakage up through the center of the sprayer caused by temperature differential. | A. A probe on the cupwasher closes against the bottom ball when the sprayer is in shipping or closed position. |
| B. Leakage at the piston collar junction. | B. The head-collar have a friction fit in the closed position. This friction fit is accomplished using 75 lbs. pressure before the over cap is applied. The over-cap holds the sprayer head in shipping position. |
| C. Leakage around the container cap particularly on (400) finish caps. | C. The SS-40 cylinder flange is tapered allowing room in the dome of the cap for a suitable gasket. |

To be sure the built-in seals described above plus a seal at the over-cap-collar junction are all new. But there is more, to use an old expression—"the SS-40 is new from the ground up". From research to new designs, to engineering, there are new mounts, new die sets, new assembly fixtures, even new tool gauges and new inspection gauges. Everything about the product is new. Actually, it is the largest new product project in Calmar's history.

## HOW DO CUSTOMERS HANDLE THE SPRAYER IN THEIR PLANTS?

Customers will receive SS-40 sprayers with the overcap in place, as the overcap will be installed at our factories. The customer *must be informed* that *under no circumstances should overcaps be removed.* The friction fit between the sprayer head and collar *must not be disturbed* or the seal may be damaged.

The overcap will be applied at our plants with approximately 10 inch pounds torque, the customer should apply

15 to 25 inch pounds torque to the container cap. Twenty inch pounds may be a good average figure depending on type of cap and gasket. Some experimentation may be required by the customer to determine optimum conditions for his container and product.

[1216] It should be noted that the overcap on the SS-40 sprayer has been designed so that it is small enough when used with deep throated chucks to minimize possible damage to the overcap particularly when caps larger than 24 M M are used. Use of torque discs to the container cap is of course to be recommended. Resina Cappers will be in use at our factories for applying the overcaps.

## WHAT ABOUT CUSTOMER PACKAGING AND SHIPPING PROBLEMS?

Although the SS-40 is constructed of durable plastic materials, it can be damaged and the seals broken through abuse and inappropriate shipping containers. As is true of any plastic closure, excessive "working" of the seal is conducive to promoting leakage.

Therefore *customer shipping cartons should include provision for protection of the SS-40 from breakage* due to shock or high static loads as well as rubbing or fretting movements against the overcap during shipment.

A clearance of 1/4 to 1/2 inch between the top of shipping carton and the SS-40 overcap should probably be insured by a carton insert between the shoulder of the bottle or can and the carton lid. This may be accomplished by:

1. Paperboard tubes or sleeves around each SS-40 bearing on the shoulder of the container and the top of the carton.
2. A formed corrugated paperboard insert with holes punched to admit the SS-40 and to press against the container when the carton is closed.
3. A U-shaped corrugated paperboard insert inverted to press against and hold in position the containers during shipment thus preventing shock against the sprayer.

*It is advisable* for the customer to label the shipping container *"this side up"*. Some of our customers have also printed an *"arrow"* on the sides [1217] of the package indicating which side should be up.

It is of great importance to our customers that their products arrive in the hands of the consumer in excellent condition. It is equally important to Calmar that the consumer purchases products in "the pink of condition." Therefore our recommendations to our customers are such as to help insure that the containers with SS-40 sprayers are packaged and shipped in such manner as to avoid damage in transit and handling.

*All sprayers, regardless of make or type should be protected during shipment.*

As modern packaging becomes more complex, expensive, and ingenious it seems to be commonplace to print instructions or warnings on the shipping containers. *Actually* a check made at a local Kroger store on a Thursday night showed over 40 products being shipped in containers marked "This side up", "Fragile", "Right side up", etc.

## WHY THREE DIFFERENT KINDS OF GASKETS?

A die cut polyethelene gasket .020" thick will be available as a standard item at no extra cost.

The polyethelene gasket has reasonably good chemical resistance, and by past experience has proven satisfactory for those customers who require high cap torques or who do have non-uniform container nozzle surfaces.

A die cut elastomeric vinyl gasket .020" thick is also available for those customers having products which are compatible with elastomeric vinyl. *Customer* testing of vinyl gaskets *is essential.* Elastomeric vinyl also has an advantage in being more resilient than polyethelene. Our experience has indicated that elastomeric vinyls may cause product compatibility problems particularly with insecticides, cosmetics, and medicinals.

Elastomeric vinyl gaskets are available at an extra cost of $1.50 per M units.

[1218] A die cut Neoprene gasket .020" thick is also available at an extra cost of $3.00 per M units.

Neoprene has the advantage of being resilient and offering good chemical resistant qualities for many products.

*Customer testing of Neoprene is also essential.* Present tests indicate good compatibility with insecticides.

Specifications for Neoprene gaskets are as follows:

50 shore hardness
1200 PSI tensile strength
450° elongation

Cylinders are ribbed to allow passage of air past gaskets to vent.

## WHAT TYPES AND SIZES OF CAPS WILL THE SS-40 ACCOMMODATE?

Production tooling for the SS-40 will accommodate caps and gaskets as follows:

*Beginning December 15*

| Metal Caps | Plastic Caps | Neoprene Gaskets |
|---|---|---|
| 28 M M | None | 28 M M |
| 30 M M | None | 30 M M |
| 1" Can | None | 1" |
| 1 1/8" Beta Can | None | 1 1/8" Beta |
| 3/4" Plastic Nozzle | None | Not Required |

*Note:* 1 1/8" cap for Accupour can only.

*Beginning February 1*

| | | |
|---|---|---|
| 22 M M | 1/2" Detergent Cap | Not required, poly nozzle |
| 24 M M | 24 M M | 22 M M |
| 28 M M | 28 M M | 28 M M |
| 30 M M | 30 M M | 30 M M |
| 1" Can | 22 M M | 28 M M & 22 M M |
| 1 1/8" Beta Can | — | 30 M M |
| 3/4" Plastic Nozzle | 3/4" Plastic Nozzle | Not Required |

*Note*: Maximum dome thickness of plastic caps—
.090″ maximum +0
.070″ minimum —0

*Note*: Only three gasket sizes available.
28 M M gasket also fits 1″ can cap.
22 M M gasket also fits 24 M M caps.
30 M M gasket also fits 1 1/8″ Beta can cap.

*Note*: *Metal Caps*
Punched hole must be a perfectly flat, clean hole without curling.
No depressed edges or grooves can be tolerated on top surface of cap.

Die cut polyethylene gaskets—available.

Die cut elastomeric vinyl gaskets—available if requested.

550

[1219] DEFENDANT'S EXHIBIT 202.

Wise—Harnage Memos

CALMAR, INC.

W. H. HARNAGE
R. D. WISE

Cincinnati, Ohio
March 31, 1958
D. Corsette
R. Palmer

Dear Hal:

A list of major priorities for product development should be as follows, and this list should serve as the basis for our discussions the latter part of this week:

[1220] Page 2

March 31, 1958

To: W. H. Harnage

From: R. D. Wise

4. NEW LEAKPROOF SPRAYER

(a) Schedule for development.

(b) Samples for patent consideration.

(c) Trial tooling.

It is difficult to restrain my enthusiasm for this item. If successful, this is what we need to seize market initiative from our competitors next year. This entire program would have to be completed about the first of November.

DEFENDANT'S EXHIBIT 210

5551

CHART SHOWING WHEREIN

# MECHANICAL ELEMENTS OF CLAIMS 1 & 2 OF SCOGGIN, JR. PATENT 2,870,943 ARE NOT FOUND IN PRIOR ART DEVICES

SCOGGIN, JR.
PATENT-IN-SUIT
2,870,943
1957-1959

Fig. 1.

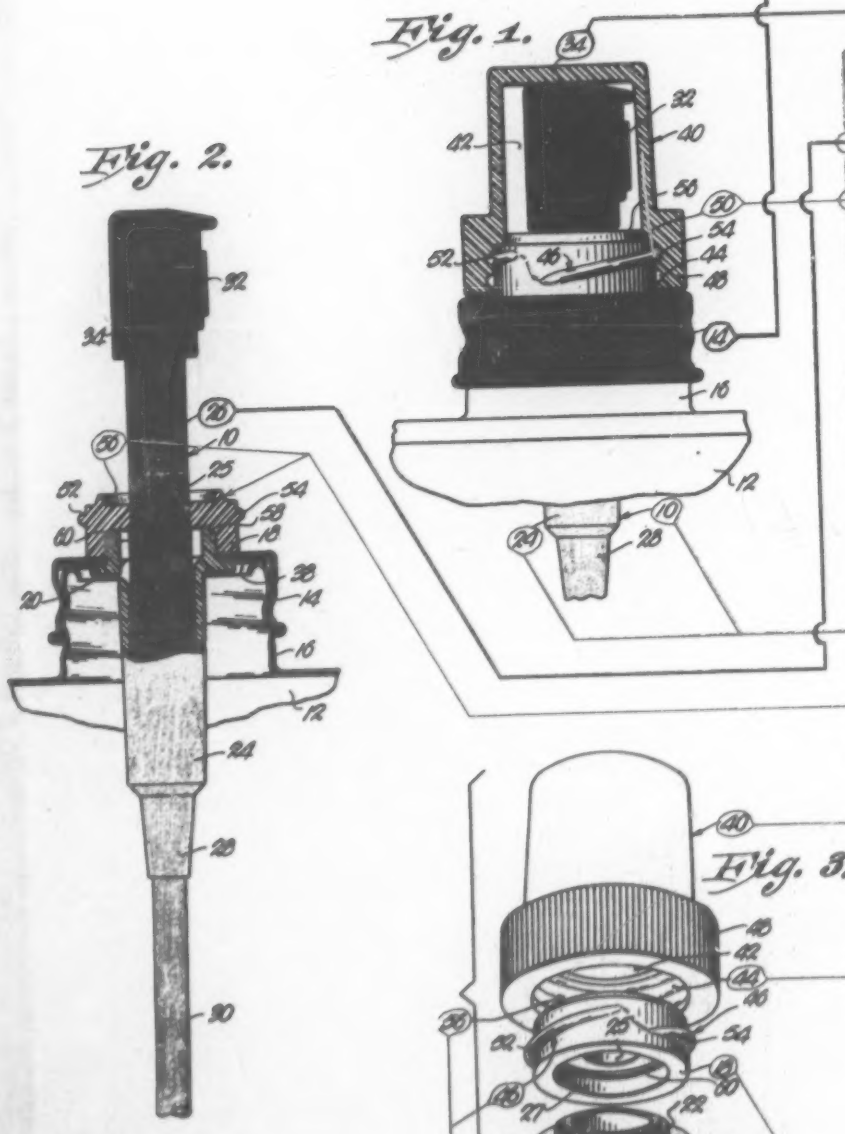

Fig. 2.



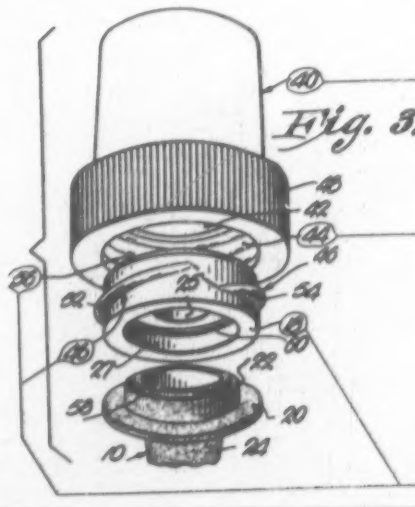

Fig. 3.

CLOSURE ASSEMBLY for LIQUID CONTAINER 12 (Colored Yellow)

CAP 14 (Colored Red)

SPRAYER 10 including BARREL 24 (Colored Flesh)

TUBULAR PLUNGER 26 (Colored Orange)

SPRAY HEAD 34 (Colored Brown)

RETAINER 18 (Colored Green) having SCREW THREADS 40 and ANNULAR RIB 56

HOLD DOWN MEMBER 60 (Colored Blue)

INTERNAL SCREW THREADS 64 (Colored Blue)

DOWNWARDLY FACING SHOULDER 59 (Colored Blue)

ANNULAR RIB 56 (Colored Green) has INCLINED OUTER ANNULAR FACE

| ELEMENT NO. | MECHANICAL ELEMENTS OF SCOGGIN, JR. PATENT 2,870,943 As Described In CLAIM 1 | CLAIM 2 |
|---|---|---|
| INTRODUCTION A | IN A CLOSURE ASSEMBLY FOR AN OPEN-TOP CONTAINER HAVING | |
| B | A PERFORATED CAP OVER SAID OPEN TOP THEREOF MOUNTING | |
| C | A SPRAY UNIT INCLUDING<br>A BARREL<br>PROVIDED WITH A TUBULAR EXTENSION PASSING COAXIALLY UPWARDLY THROUGH THE PERFORATION IN SAID CAP. | |
| D | A PLUNGER RECIPROCABLY CARRIED BY THE BARREL AND NORMALLY EXTENDING THEREBEYOND AND | |
| E | A SPRAY HEAD ON THE UPPER END OF THE PLUNGER ABOVE SAID EXTENSION. | |
| 1 | THE COMBINATION WITH SAID SPRAY UNIT OF<br>AN ANNULAR RETAINER<br>TELESCOPED OVER AND SECURED TO THE EXTENSION ABOVE SAID CAP AND PROVIDED WITH<br>EXTERNAL, CIRCUMFERENTIALLY DISPOSED SCREW THREADS AND<br>AN ANNULAR, CONTINUOUS SEGMENT AT THE UPPER PART OF THE RETAINER ABOVE SAID SCREW THREADS, AND | A CLOSURE ASSEMBLY AS SET FORTH IN CLAIM 1<br>WHEREIN |
| 2 | A CUP-SHAPED HOLD-DOWN MEMBER<br>HOUSING THE HEAD AND<br>HOLDING THE PLUNGER DEPRESSED AT SUBSTANTIALLY THE INNERMOST PATH OF TRAVEL THEREOF WITHIN THE BARREL, SAID MEMBER BEING PROVIDED WITH | |
| 3 | INTERNAL SCREW THREADS<br>COMPLEMENTALLY ENGAGING SAID SCREW THREADS ON THE RETAINER AND HAVING | |
| 4 | AN INTERNAL, CIRCUMFERENTIALLY EXTENDING, CONTINUOUS SHOULDER<br>DISPOSED TO ENGAGE SAID SEGMENT AROUND THE ENTIRE PERIPHERY THEREOF AND THEREBY PRESENT A LIQUID-TIGHT SEAL LOCATED BETWEEN THE SPRAY HEAD AND SAID THREADS ON THE RETAINER AND SAID MEMBER RESPECTIVELY,<br>SAID SHOULDER BEING SPACED FROM THE LOWER ANNULAR PERIPHERAL EDGE OF THE MEMBER A DISTANCE AT LEAST SLIGHTLY LESS THAN THE DISTANCE FROM THAT PORTION OF SAID SEGMENT NORMALLY ENGAGED BY SAID SHOULDER, TO THE PROXIMAL UPPER SURFACE OF THE CAP<br>WHEREBY SAID LOWER EDGE OF THE MEMBER IS MAINTAINED OUT OF CONTACTING RELATIONSHIP WITH THE CAP WHEN THE MEMBER IS ON THE RETAINER IN A POSITION WITH SAID SHOULDER IN TIGHT SEALING ENGAGEMENT WITH THE SEGMENT. | |
| 5 | | ONE OF THE NORMALLY INTERENGAGED SURFACES OF THE SHOULDER AND SEGMENT RESPECTIVELY IS SUBSTANTIALLY CONICAL TO PRESENT<br>AN INCLINED ANNULAR FACE<br>COAXIAL WITH THE MEMBER AND SAID RETAINER AND<br>OF SUFFICIENT DIAMETER AT THE LARGEST END THEREOF TO CAUSE THE SEAL EFFECTED BETWEEN THE SHOULDER AND SAID SEGMENT TO BECOME TIGHTER AS THE SHOULDER SLIDES ON SAID SEGMENT DURING SHIFTING OF THE MEMBER TOWARD THE CAP. |

| RELIED UPON BY | | | | | | | |
|---|---|---|---|---|---|---|---|
| MOTHERSHEAD 2,714,974 | JOHNSE 2,719,664 | TORNBERG ET AL 2,834,975 | MELLON 2,598,687 | LIVINGSTONE 2,715,488 | LIVINGSTONE 2,743,488 | MELLON | |
| YES | YES | YES | YES | YES | YES | Y | |
| NO | YES | YES | YES | YES | YES | Y | |
| NO | NO | YES | NO | NO | NO | Y | |
| NO | YES | YES | YES | NO | NO | Y | |
| NO | YES | YES | YES | NO | NO | Y | |
| NO | NO | NO | NO | NO | NO | | |
| NO | YES | NO | YES | NO ? | NO | | |
| YES ? | YES | NO | NO | YES ? | YES ? | | |
| NO | NO | NO | NO | NO | NO | | |
| NO | NO | NO | NO | NO | NO | N | |

OVERSIZE PAGE SEE NEXT FRAME

16

#3

5553

11

...F SCOGGIN, JR. PATENT

...T DEVICES

...R. PATENT 2,870,943

CLAIM 2

...URE ASSEMBLY AS SET FORTH IN
...

...WHEREIN

...OF THE NORMALLY INTERENGAGED
...FACES OF THE SHOULDER AND SEGMENT
...PECTIVELY IS SUBSTANTIALLY CONICAL
...PRESENT

...ARNED ANNULAR FACE

...KEAL WITH THE MEMBER AND SAID
...TNER AND

...SUFFICIENT DIAMETER AT THE LARGEST
...THEREOF TO CAUSE THE SEAL EFFECTED
...EEN THE SHOULDER AND SAID SEGMENT
...BECOME TIGHTER AS THE SHOULDER
...ES ON SAID SEGMENT DURING SHIFTING
...HE MEMBER TOWARD THE CAP.

| IS ELEMENT FOUND IN PRIOR ART PATENTS | | | | | | | | | | | | | | | | | | | | |
|---|---|---|---|---|---|---|---|---|---|---|---|---|---|---|---|---|---|---|---|---|
| RELIED UPON BY DEFENDANT | | | | | | | | | | | FILE WRAPPER REFERENCES | | | | | | OTHERS | | | |
| HOTHERSALL 1,714,874 | LOHSE 2,119,884 | TURNBULL ET AL 2,434,875 | MELLON 2,580,687 | LIVINGSTONE 2,715,480 | LIVINGSTONE 2,763,402 | MELLON 2,861,339 | COOPRIDER ET AL 2,956,509 | | | BIDDULPH 737,210 (Br.) | DARLEY, JR. 1,447,712 | NILSON 2,116,222 | LOHSE 2,119,884 | MELLON 2,586,687 | SLADE 2,844,290 | | MARTIN 2,362,080 | STEWART ET AL 2,846,724 | | | |
| YES | YES | YES | YES | YES | YES | YES | YES | | | YES | YES | YES | YES | YES | YES | | YES | YES | | | |
| NO | YES | YES | YES? | YES | YES | YES? | YES | | | NO | YES? | NO | YES | YES? | YES | | YES | YES | | | |
| NO | NO | YES | NO | NO | NO | YES? | YES | | | NO | NO | NO | NO | NO | NO | | YES | YES | | | |
| NO | YES | YES | YES | NO | NO | YES | YES | | | NO | NO | NO | YES | YES | NO | | YES | YES | | | |
| NO | YES | YES | YES | NO | NO | YES | YES | | | NO | NO | NO | YES | YES | NO | | YES | YES | | | |
| NO | NO | NO | NO | NO | NO | NO | YES | | | NO | NO | NO | NO | NO | NO | | NO | NO | | | |
| NO | YES | NO | YES | NO? | NO | YES | YES | | | NO | NO | NO | YES | YES | NO | | NO | NO | | | |
| YES? | YES | NO | NO | YES? | YES? | NO | YES | | | NO | NO | NO | YES | NO | YES | | NO | NO | | | |
| NO | NO | NO | NO | NO | NO | NO | YES | | | NO | NO | NO | NO | NO | NO | | NO | NO | | | |
| NO | NO | NO | NO | NO? | NO? | NO | YES | | | NO | NO | NO | NO | NO | NO | | NO | NO | | | |

111

[fol. 555]

IN THE UNITED STATES COURT OF APPEALS

FOR THE EIGHTH CIRCUIT

Appeals from the United States District Court for the Western District of Missouri.

No. 17,540

---

CALMAR, INCORPORATED, Appellant,

v.

COOK CHEMICAL COMPANY, Appellee.

---

No. 17,541

COLGATE-PALMOLIVE COMPANY, Appellant,

v.

COOK CHEMICAL COMPANY, Appellee.

---

OPINION—August 21, 1964

Before Van Oosterhout, Ridge and Mehaffy, Circuit Judges.

MEHAFFY, Circuit Judge:

Appellants, Calmar, Incorporated and Colgate-Palmolive Company, brought separate actions for declaratory judgment against appellee, Cook Chemical Company, seeking a ruling of invalidity and noninfringement of United States [fol. 556] Patent No. 2,870,943 filed on March 4, 1957 and issued on January 27, 1959 to inventor Baxter I. Scoggin, Jr. Cook had acquired ownership of the patent and counterclaimed alleging its validity, infringement by both appellants and unfair competition on the part of Colgate. All

actions were consolidated for trial, but hearing on the unfair competition charge against Colgate was deferred pending the outcome of the issues of validity and infringement. Jurisdiction and existence of a justiciable controversy obtain. The District Court in an opinion published in 220 F.Supp. 414 found the patent valid and infringed, and we affirm.

The Scoggin patent in issue will be referred to as Cook-Bakan 2 and the accused device as Calmar SS-40. The undisputed factual background may be briefly recounted. Cook has been in the household insecticide business since 1945. Until 1947 Cook utilized metal sprayers as a dispenser for its product, trademarked "Real Kill", but in that year it first purchased newly developed plastic sprayers from Calmar as a sales promotion gimmick and attached them to the outside of its bottles of insecticide with a separate holder. Successful sales reaction to the idea necessitated its continued practice. Prior to 1956 Cook purchased its sprays from Calmar, but thereafter manufactured its own sprayers through a subsidiary, Bakan Plastics Company. In 1954 Colgate-Palmolive entered the household insecticide field with an aerosol container labeled "Kan Kill". In 1958 Colgate was marketing its "Kan Kill" in liquid, as well as aerosol, form, using a Calmar sprayer attached separately to a glass container, the combination of which resembled Cook's bottle of liquid "Real Kill" with accompanying Bakan sprayer. Marketing of both manufacturers' products [fol. 557] with separately attached plastic sprayers posed extra handling and expense problems. The bottler had to affix the cardboard or plastic holder on the neck of the bottle and insert therein the sprayer. More vexatious were the problems of breakage of the flimsily secured sprayer during shipment and pilfering while on the retailer's shelf. With the advance of the pressurized aerosol container, competition became acute due to the convenient shipment and use of the aerated sprayer, which required only that the housewife remove the sprayer cap and depress a button releasing the gasified insecticide. The liquid insecticide makers were

aware of their product's shipping and operation shortcomings, and plagued by the apparent need for a container with an integrated sprayer-pump which could be safely shipped without breakage or leakage. Despite the extensive research and experimentation given the problem by Calmar, Cook and others for a period of some ten years, no solution was forthcoming until conception and commercialization of the Cook-Bakan 2, described by its inventor as a "Pump-Type Liquid Sprayer Having Hold-Down cap".

The sprayer pump, although not the patentable device in suit, has as its upper element, a head containing an orifice, connected with an internal pump through which a dip tube extends to the liquid in the container below. When the sprayer head is depressed, the pump is actuated and causes the liquid in spray form to be emitted.

It was a simple matter to incorporate the sprayer in the container rather than employ the ordinary non-perforated cap with sprayer separately attached, but such an arrangement did not lend itself to shipping because the sprayer would accidentally pump the liquid out in transit. The sprayer head had to be combined and shielded with some type of overcap which maintained the plunger in a [fol. 558] depressed position minimizing leakage from the pump of the low viscous insecticide or other similar liquids, while retaining any such leakage within the overcap through a liquid-tight seal until the cap was removed and the product put into use by the consumer.

Scoggin described his answer to these liquid manufacturers' dilemma in the specifications of his patent application as an invention relating to "improvements in structures for dispensing liquids wherein is provided a spray-type hand pump mounted within a container for the liquid through use of the closure cap of such container". Of the four claims on which the Patent Office granted the patent, we are concerned only with Claims 1 and 2.[1]

---

[1] Claim 1. "In a closure assembly for an open-top container having a perforated cap over said open top thereof mounting a spray unit including a barrel provided with a tubular extension

The object of the patent is to eliminate the old outside attached sprayer and supplant it with a sprayer enclosed [fol. 559] in the container in such a fashion that the sprayer head will be depressed, protected, and sealed in order that the product would lend itself to transportation and handling without breakage or leakage. Claim 1 described a completely integrated device which assertedly accomplished this purpose by the assemblage of corresponding internal threads in the over-cap which screw onto corresponding exteral threads of the sprayer head's collar with an allowance for a space between the lower edge of the over-cap and the container cap to insure a torqued fit. The

---

passing coaxially upwardly through the perforation in said cap, a plunger reciprocally carried by the barrel and normally extending therebeyond and a spray head on the upper end of the plunger above said extension, the combination with said spray unit of an annular retainer telescoped over and secured to the extension above said cap and provided with external, circumferentially disposed screw threads and an annular, continuous segment at the upper part of the retainer above said screw threads, and a cup-shaped hold-down member housing the head and holding the plunger depressed at substantially the innermost path of travel thereof within the barrel, said member being provided with internal screw threads complementally engaging said screw threads on the retainer and having an internal, circumferentially extending, continuous shoulder disposed to engage said segment around the entire periphery thereof and thereby present a liquid-tight seal located between the spray head and said threads on the retainer and said member respectively, said shoulder being spaced from the lower annular peripheral edge of the member a distance at least slightly less than the distance from the portion of said segment normally engaged by said shoulder, to the proximal upper surface of the cap whereby said lower edge of the member is maintained out of contacting relationship with the cap when the member is on the retainer in a position with said shoulder in tight sealing engagement with the segment."

Claim 2. "A closure assembly as set forth in claim 1 wherein one of the normally interengaged surfaces of the shoulder and segment respectively is substantially conical to present an inclined annular face coaxial with the member and said retainer and of sufficient diameter at the largest end thereof to cause the seal effected between the shoulder and said segment to become tighter as the shoulder slides on said segment during shifting of the member toward the cap."

over-cap, while holding the sprayer head depressed, also provides for a seal resulting from a raised annular rib around the top of the collar engaging the periphery of three surfaces formed by a downwardly facing shoulder on the underside of the over-cap above the threads. An expert testifying on behalf of appellee described the device's novel contribution to the industry as:

> "The first commercially successful, inexpensive integrated shipping closure pump unit which permitted automated assembly with a container of household insecticide or similar liquids to produce a practical, ready-to-use package which could be shipped without external leakage and which was so organized that the pump unit with its hold-down cap could be itself assembled and sealed and then later assembled and sealed on the container without breaking the first seal."

*Validity of the Patent.* The statute provides that a patent shall be presumed valid and the burden of establishing invalidity rests on the party asserting it. 35 U.S.C.A. § 282. The issue of patentability of a new combination of old elements to form invention must, however, be approached keeping in mind the more exacting standard long required by the Supreme Court. In *Selmix Dispensers, Inc.* v. *Multi-*
[fol. 560] *plex Faucet Co., Inc.*, 277 F.2d 884 (8th Cir. 1960), we recognized the Supreme Court's admonition in *Great Atlantic and Pacific Tea Co.* v. *Super-Market Equipment Corp.*, 340 U.S. 147, 152 (1950) that "The conjunction or concert of known elements must contribute something; only when the whole in some way exceeds the sum of its parts is the accumulation of old devices patentable." See also *Cuno Engineering Corp.* v. *Automatic Devices Corp.*, 314 U.S. 84, 90 (1941); *Lincoln Engineering Co.* v. *Stewart-Warner Corp.*, 303 U.S. 545, 549 (1938); *Caldwell* v. *Kirk Mfg. Co.*, 269 F.2d 506 (8th Cir. 1959), cert. denied 361 U.S. 915 (1959); *Briggs & Stratton Corp.* v. *Clinton Machine Co., Inc.*, 247 F. 2d 397 (8th Cir. 1957), cert. denied 355 U.S. 914 (1958).

Factual comparison of the individual elements of the Cook-Bakan 2 sprayer unit with prior art would permit a finding that its components are not novel per se—threaded over-cap depressing sprayer head (Lohse Pat. No. 2,119,884); complementary threaded collar (Lohse Pat. No. 2,119,884; Darley Pat. No. 1,447,712); space tolerance between over-cap and container cap (Slade Pat. No. 2,844,290; Livingston Pat. No. 2,715,480); and shoulder-rib seal at zone beneath sprayer head and above threads (Mellon Pat. No. 2,586,687). However, there is nothing in the prior art suggesting Scoggin's unique combination of these old features in such an assemblage as would solve the production, shipping, and operation problems which for years beset the insecticide industry as well as producers of other low viscous liquids. The patentee's "closure assembly" eliminated the costly and time consuming steps in production requiring attachment of the sprayer holder to the outside of the container and insertion of the sprayer, while at the same time providing a protected, sealed [fol. 561] sprayer unit which need only be screwed onto the top of the insecticide container like a metal cap, not to be disturbed until removal of the over-cap and application by the ultimate consumer. This novel "marriage" of the sprayer with the insecticide container which took years in the discovery is neither taught by, nor readily discernible from the application of mechanical skill to the elements of the prior art.

Not only did the device produce new and useful results in the more efficient and economical bottling of low viscous liquids while simultaneously eliminating breakage and leakage during its shipment and storage, but it enjoyed immediate commercial success from the public. Cook used on its own products or sold to customers some fifteen million of the Cook-Bakan 2 sprayers receiving not over one hundred complaints which is negligible when dealing with an item packaged by mass production techniques. Evidence of commercial success in a doubtful case may turn the scale in favor of the patentee. *Long* v. *Arkansas Foundry*

*Co.*, 247 F.2d 366, 369 (8th Cir. 1957). Instantaneous industry, as well as public acceptance of the device in issue confirms our belief invention was produced.

In short, the Cook-Bakan 2 meets the exacting standard required for a combination of old elements to rise to the level of patentable invention by fulfilling the long-felt need with an economical, efficient, utilitarian apparatus which achieved novel results and immediate commercial success. Unquestionably, the trial court's finding something new was created worthy of patent protection was proper.

*Infringement.* After the Cook-Bakan 2 was marketed, some of Calmar's larger customers solicited it to produce [fol. 562] a leak-proof, integrated sprayer. At that time Calmar was distributing an uncovered, lock-down bayonet slot type sprayer, the S-25-LP, which proved so unsatisfactory in retaining products of the liquidity of insecticides that one of Calmar's officials discouraged promotion of the item by its sales force. Calmar also experimented with a polyethylene boot, resembling an elongated balloon, which was inserted in the container and covered the lower extremity of the sprayer pump to prevent leakage. Colgate, a customer of Calmar, rejected this innovation and expressed preference for something similar to the Cook-Bakan 2 in appearance which would provide an internally leak-proof sprayer in addition to a shipping enclosure for the sprayer head. Calmar was notified by another customer that it had a Cook-Bakan 2 on test which had proven not to leak. During the fall of 1957 continued pressure from other customers beleaguering Calmar to produce a truly leak-proof integrated sprayer prompted Calmar's president to employ engineer Douglas F. Corsette in December of 1957, assigning him the special mission of designing such a sprayer which would satisfy customer demands and recapture market initiative.

On September 9, 1958, subsequent to commercialization of the Cook-Bakan 2 in 1957, application was made for a patent on the accused device, Calmar SS-40. Production and distribution of the accused device immediately fol-

lowed Calmar's grant of United States Patent No. 2,956,509 on October 18, 1960.

The challenged features of the alleged infringing Calmar SS-40, the combination of collar to cap seal with attendant hold-down of the sprayer head, are identical with respect to the sealing zone, principle, and purpose of the Cook-Bakan 2 and differs only in the shape or form of the [fol. 563] sealing surfaces at the collar to cap engagement.[2] The trial court correctly described this uncontrolling difference in shape of the seal as the employment of a square shoulder-to-rib type seal on the Cook-Bakan 2 opposed to a tongue-and-groove or "labyrinth" seal on the accused device. The Cook-Bakan 2 provides for three contacting sealing surfaces, whereas the tongue-and-groove shape of the Calmar SS-40 provides for four contacting surfaces. The practical effect of the accused device was to perform substantially the same function in substantially the same manner to obtain the same result as the patent in issue. Exercising our appellate prerogative in a patent case to interpret the exhibits for ourselves, we are constrained to agree with the trial court's statement that "Upon close inspection of the devices, it is difficult to see how they could be much more similar and yet have any different features".

Appellants assert error on the part of the trial court in basing its conclusion of infringement on comparison of the devices rather than comparing the accused device with the claims of the patent in suit which they maintain bespeak dissimilarity. The record, however, affords specific evidence of the similarity of the accused device with elements described in Claims 1 and 2 of the Cook-Bahan 2 patent. Testifying at length concerning the elements and patent claims of both devices, a highly qualified expert witness for appellee stated that it was his opinion each and every one of the mechanical elements outlined in Claims 1 and 2

---

[2] The accused device also utilized "inner seals" in the pump mechanism uninvolved in this litigation.

of the Cook-Bakan 2 finds a response in the structure of the accused Calmar SS-40 sprayer unit. The Supreme Court held in *Sanitary Refrigerator Co.* v. *Winters,* 280 [fol. 564] U.S. 30 (1929) that generally one device is an infringement of another if it performs substantially the same function in substantially the same way to obtain the same result even though they differ in name, form, or shape. See also *Graver Tank Mfg. Co., Inc.* v. *Linde Air Products Co.,* 339 U.S. 605, 608 (1950); *Priebe & Sons Co.* v. *Hunt,* 188 F. 2d 880, 883-84 (8th Cir. 1951), petition for cert. dismissed 342 U.S. 801 (1951). The accused device falls within this definition prohibiting substantial equivalence since its basic mechanical elements, mode of operation, and results obtained find an identical counterpart described in the pertinent claims of the Cook-Bakan 2, the two devices varying only with respect to the inconsequential shape of the sealing surfaces.

The finding of infringement in the instant case based on the doctrine of substantial equivalence is a factual determination. *Graver Tank Mfg. Co., Inc.* v. *Linde Air Products Co., supra* at 609; *Maytag Co.* v. *Murray Corp. of America,* 318 F.2d 79, 83 (6th Cir. 1963). Substantial evidence supports the trial court's finding of infringement.

The judgment of the District Court is in all things affirmed.

[fol. 565]

IN THE UNITED STATES COURT OF APPEALS

FOR THE EIGHTH CIRCUIT

September Term, 1963

No. 17540

CALMAR, INCORPORATED, Appellant,

vs.

COOK CHEMICAL COMPANY.

Appeal from the United States District Court for the Western District of Missouri,

and

No. 17541

COLGATE-PALMOLIVE COMPANY, Appellant,

vs.

COOK CHEMICAL COMPANY.

Appeal from the United States District Court for the Western District of Missouri.

JUDGMENT—August 21, 1964

These causes came on to be heard on the record from the United States District Court for the Western District of Missouri, and were argued by counsel.

On Consideration Whereof, It is now here Ordered and Adjudged by this Court that the judgment of the said District Court in these causes (District Court Nos. 12349-3 and 13006-3) be, and the same is hereby, affirmed.

August 21, 1964.

[fol. 566] [File endorsement omitted]

IN THE UNITED STATES COURT OF APPEALS

FOR THE EIGHTH CIRCUIT

Appeal Numbers 17,540 and 17,541 Civil

---

CALMAR, INC. and COLGATE-PALMOLIVE CO.,
Plaintiffs-Appellants,

v.

COOK CHEMICAL COMPANY, Defendant-Appellee.

---

PETITION OF APPELLANTS FOR REHEARING EN BANC UNDER THIS COURT'S RULE 15—Filed September 29, 1964

---

[fol. 567]

## TABLE OF CONTENTS


PAGE

I. The Court Overlooked Conflict between Panels of this Court ..... 567

II. The Court Overlooked the Fact that the Presumption of Validity Has No Support ..... 570

III. The Court Overlooked the Absence of Commercial Success of a Kind Requisite to Support the Validity of the Patent in Suit ..... 572

IV. The Court Overlooked the Fact that the Proofs Fail to Show that the Patent in Suit Fulfilled a Long Felt Need ..... 573

V. The Court Overlooked the Fact that the Cap-to-Collar Seal and the Conventional Spray Pump Operate separately and independently of Each Other ..... 574

Certificate of Counsel Under Eighth Circuit Rule 15(a) 576

## TABLE OF CASES

Cuno Engineering Corp. v. Automatic Devices Corp., 314 U.S. 84, 90 (1941) ..... 568

John Deere Company of Kansas City et al. v. Graham et al., 333 F. 2d 529 (1964); 142 USPQ 243 ..... 567

Great Atlantic and Pacific Tea Co. v. Super-Market Equiment Corp., 340 U.S. 147, 152 (1950) ..... 567-68

Lincoln Engineering Co. v. Stewart-Warner Corp., 303 U.S. 545, 549; 82 L. Ed. 1008, 1010; 58 S. Ct. 662 ..... 575

Neff Instrument Corp. v. Cohn Electronics, Inc., 298 F. 2d 82, 86 (C.A. 9, 1961) ..... 570

Patterson-Ballagh Corp. v. Moss et al., 201 F. 2d 403, 406 (C.A. 9, 1953) ..... 570

Western Pac. R. Corp. et al. v. Western Pac. R. Co., et al., 345 U.S. 247, l.c. 270; 73 S. Ct. 856, l.c. 668 ..... 570

Williams Mfg. Co. v. United Shoe Mach. Corp., 121 F. 2d 273, 277 (C.A. 6, 1941) ..... 570-71

[fol. 568]

IN THE UNITED STATES COURT OF APPEALS

FOR THE EIGHTH CIRCUIT

Appeal Numbers 17,540 and 17,541 Civil

---

CALMAR, INC. and COLGATE-PALMOLIVE CO.,
Plaintiffs-Appellants,

v.

COOK CHEMICAL COMPANY, Defendant-Appellee.

---

## Petition of Appellants for Hehearing En Banc Under This Court's Rule 15

Appellants Calmar, Inc. and Colgate-Palmolive Company respectfully pray this Court to grant a rehearing *en banc* of this Court's decision of August 21, 1964 on the points herein stated, under Rule 15(e) of the Rules of this Court. By order of the Court dated August 26, 1964, the time within which to file this petition was extended to September 30, 1964.

[fol. 569]

## I.

### The Court Overlooked Conflict Between Panels of This Court

In its determination of validity of the Scoggin patent in suit, the Court has overlooked or failed to give due weight to this Court's opinion in the case of *John Deere Company of Kansas City et al.* v. *Graham et al.*, decided June 18, 1964, 333 F. 2d 529 (1964), wherein on a factual situation essentially parallel to that of the case at bar* another panel of this Court reached a directly contrary conclusion, relying on, among other authorities, *Great Atlantic and Pacific Tea Co.* v. *Super-Market Equipment Corp.*, 340 U.S. 147,

---

* For the facts in the *John Deere* case see the District Court's opinion and findings, 216 F. Supp. 272.

152 (1950) and *Cuno Engineering Corp.* v. *Automatic Devices Corp.*, 314 U.S. 84, 90 (1951).

The Court, in defining appellee's "novel contribution to the industry" (Opinion p. 5), not in terms of the actual claims in suit but *in hypothetical terms supplied by appellee's expert** and quoted in full on page 5 of its opinion, overlooked the fact that in the patent claims, which measure the grant to the patentee, nothing is mentioned about the steps followed in *assembling* the elements of the "closure assembly" or the sequence of steps, and that the claims are silent as to combining the sprayer with a container for household insecticide or low viscous liquids, i.e., the "marriage" emphasized by the Court (Opinion p. 7), and that the panel deciding the *John Deere* case, supra, said (page 534):

> "Additionally, it is significant that in the 798 Patent claims, nothing is mentioned about the shank flex which [fol. 570] became the basic reason for sustaining the validity of the patent in the trial court. To be sure, it is the claim that measures the grant to the patentee, Briggs & Stratton Corporation v. Clinton Machine Co., supra, 247 F.2d at 400, and here the claims of the 798 Patent are silent concerning the alleged flex. * * *"

The Court overlooked and failed to give due weight to the fact that appellees acknowledged the base combination of the patent in suit to be old and cancelled as unpatentable some nineteen claims thereto, including application Claim 18 (R. 363); that apart from the Court's reference to "low viscous liquids", as to which the claims of the patent in suit are silent, the "unique combination" and the "new and useful results" attributed by the Court to the pat-

---

* ". . . [a] closure pump unit which permitted automated assembly with a container of household insecticide or similar liquids . . . which was so organized that the pump unit with the hold-down cap could be itself assembled and sealed and then later assembled and sealed on the container without breaking the first seal" (Opinion p. 5).

ent in suit are the old combination and old results expressly taught by Lohse patent 2,119,884* (Exh. T, R. 407, 408) and that at best the improvement combination of the patent in suit produces an old result in a cheaper and otherwise more advantageous way (or in a "more efficient and economical" way (Opinion p. 7) and involves no new principle.**

[fol. 571] In holding the patent in suit valid on the ground that it provided "an economical, efficient, utilitarian apparatus" (Opinion p. 7), the Court overlooked the distinction between the rule of the Fifth Circuit respecting an improvement combination, which was apparently adopted in the instant case, and the rule enunciated by a different panel of this Court in the *John Deere* case, supra (p. 533), where the Fifth Circuit rule is rejected in the following language:

> "* * * Unlike our court, the Fifth Circuit has 'long recognized * * * that an improvement combination is patentable even though its constituent elements are singly revealed by the prior art, where * * * it produces an *old result in a cheaper and otherwise more advantageous way*' (emphasis supplied), 219 F. 2d at

---

* "This invention relates to liquid sprayers of the general type used for spraying liquids upon windows, house plants, clothing and for other purposes and is intended to provide simple and effective means for economically performing its functions while also making provision for convenient and *safe transportation when filled,* or partly filled, with liquid *without danger of leakage* of the contents.

"With these objects in view the invention comprises a bottle closure removably attachable to a bottle or other container and provided with a movable plunger piston and a liquid chamber, the closure being provided with *removable sealing means which serves both to prevent leakage of the liquid content to the outside and to retain the plunger in a depressed position* to avoid the filling of the outlet conduit which forms a hollow stem for the piston." (Paragraphs 1 and 2 of Lohse specification—R. 408.) (Emphasis supplied.)

** "A new application of an old device may not be patented if the 'result claimed as new is the same in character as the original result' . . . even though *the new result* had not before been contemplated . . ." (*Cuno Engineering,* supra, at 91.) (Emphasis supplied.)

519. For other recognition by the Fifth Circuit of the 'old result in a more efficient and economical way' see, Cornell v. Adams Engineering Company, supra, 258 F. 2d at 875-876."

Further, in bringing this case under the exception noted in *Great A. & P.* v. *Super-Market, supra,* in which it is suggested that an "accumulation of old devices" may be patentable "when the whole in some way exceeds the sum of its parts" (Opinion p. 6), this Court overlooked its own interpretation of the exception, expressed in the *John Deere* case, supra (p. 533):

"* * * Stated differently, 'The bringing together of old elements in a mechanism involving *no new principle, to produce an old result, however skillfully done, even though the result marks an advance in efficiency and utility,* is but an exercise of mechanical skill and not invention.' General Bronze Corp. v. Cupples Products Corp., 8 Cir. 189 F. 2d 154, 161 (1951)." (Emphasis supplied.)

As stated in the concurring opinion of Justice Frankfurter in *Western Pac. R. Corp. et al.* v. *Western Pac. R. Co., et al.,* 345 U.S. 247, l.c. 270; 73 S. Ct. 856, l.c. 668:

"Rehearings *en banc* by these courts are to some extent necessary in order to resolve conflicts between panels. This is the dominant concern."

[fol. 572] II.

The Court Overlooked the Fact That the Presumption of Validity Has No Support

The patent in suit was accorded the statutory presumption of validity (Opinion p. 5). That presumption "is based upon the expertness of the Patent Office," *Neff Instrument Corp.* v. *Cohn Electronics, Inc.,* 298 F. 2d 82, 86 (C.A. 9, 1961). See also *Patterson-Ballagh Corp.* v. *Moss et al.,* 201 F. 2d 403, 406 (C.A. 9, 1953) and *Williams Mfg.*

*Co.* v. *United Shoe Mach. Corp.*, 121 F. 2d 273, 277 (C.A. 6, 1941). The Livingstone 2,715,480 (R. 385) and Turnbull 2,434,875 (R. 419) patents were not before the Patent Office

Here the Court overlooked the fact that, after Scoggin's Claims 1-17 were rejected by the Examiner, and together with Claims 18-24 were withdrawn by appellee's attorney (R. 365, next to last paragraph and R. 370), the final limiting clause of Claim 1 of the patent (Claim 25 of the application, R. 370), inserted by amendment to define novelty over the prior art by agreement between the Patent Office and the patentee's attorney, as shown in the file history of the patent (R. 371, 372),* was found by the District Court (R. 26, 27) to be "descriptive of an element of the patent, but not a part of the invention" and "not new or novel", thereby holding that the sole claim to novelty or invention [fol. 573] relied upon by the expertness of the Patent Office in granting the patent did not constitute either novelty or invention.

The Court thus overlooked the fact that no basis now exists for the presumption of validity, as the expertness of the Patent Office in the instant case stands negated by the findings of the trial court and was not exercised as to the patents to Livingstone and Turnbull.

---

*In the amendment cancelling Claim 18 and presenting Claim 25 (Claim 1 of the patent), applicant's attorney said (R. 371):

"During the subject interview, the Honorable Examiner cited two additional patents not previously of record in the prosecution of this application and which were believed to be pertinent as to the allowability of Claims 18 and 19, presented in applicant's response of November 1, 1958. . . .

"These new patents were carefully studied during the interview and *agreement was reached between the Honorable Examiner and applicant's attorney relative to limitations which must be in the claims in order to define novelty* over the previously applied disclosure of Lohse when considered in view of the newly cited patents of Mellon and Darley, Jr." (Emphasis supplied.)

## III.

### The Court Overlooked the Absence of Commercial Success of a Kind Requisite to Support the Validity of the Patent in Suit

The Court overlooked the fact that during 1958, Cook's first year of marketing insecticide in a container equipped with the "closure assembly" of the patent in suit, no other insecticide container equipped with a "closure assembly" was being marketed; that Colgate's insecticide is "still sitting in the shelves, because it was insecticide that had the sprayer hanging on the side of the bottle" (R. 69); that nevertheless Cook in that year was unable to sell any more insecticide or to sell or give away any more sprayer assemblies, than in the previous year when it employed the earlier sprayer hung on the outside of the container (R. 62).

The Court also overlooked the fact that the seal of the single embodiment of the patent constituting the consideration for its grant is subject to distortion and leakage (Exh. AD, R. 506, 507) and constitutes a step backward in the art of "integrated closure assemblies" from the overcap seals of the Lohse (Exh. T, R. 407) and Mellon (Exh. U, R. 410) patents, employing conventional gasket seals, and the superior molded plastic overcap-to-collar seal of the Livingstone patent 2,715,480, Figure 8 (R. 385). The Court additionally overlooked and neglected to give due weight to the documentary evidence (Exh. C, R. 341) establishing that in November 1959, less than ten months after the patent in suit issued on January 27, 1958, the imperfect [fol. 574] seal of the appellee's Bakan 2, corresponding to the disclosure of the patent, was re-engineered and redesigned as Bakan 2 Modified to employ a seal essentially like the overcap-to-collar seal of the Livingstone patent, Figure 8 (Exh. JJ, R. 455), of the kind previously adopted by appellant Calmar (R. 65, Exh. QQ, R. 475), and that appellee thereupon discontinued the production of the seal disclosed and claimed in the patent in suit (Exh. C, R. 341 last paragraph).

## IV.

### The Court Overlooked the Fact That the Proofs Fail to Show That the Patent in Suit Fulfilled a Long Felt Need

The Court in holding (p. 7):

> ". . . the Cook-Bakan 2 meets the exacting standard required for a combination of old elements to rise to the level of patentable invention by fulfilling the long-felt need . . ."

overlooked the fact that the patent in suit makes no provision against leakage into the cap (R. 265) and that the need even in the insecticide industry was not for a mere hold-down cap that would depress the sprayer and provide a *cap seal* against leakage of liquid from the cap, which need was fulfilled by Lohse and Mellon, but that the long felt need, recognized in appellee's later filed patent application Serial No. 789,902 (Ex. AD, R. 504),* was for spray *pump seals* that would prevent liquid from passing from the pump into the overcap and which would thus pro- [fol. 575] vide a truly leakproof integrated sprayer (R. 305-307). The Court additionally overlooked the fact that the patent in suit goes no further than Lohse and Mellon had previously gone in providing a mere hold-down cap to depress the sprayer and seal against leakage *from the cap* (R. 265) and the fact that the cap seal of the patent in suit was admittedly imperfect (Ex. AD, R. 506, 507).

The Court overlooked and failed to give due weight to the fact that the long felt need was first fulfilled by the

---

* The later application asserted:

> "An additional important object of the invention is to provide a sealing member capable of maintaining the liquid within . . . the pump, whereby liquid is prevented from passing *into* the hold-down cap . . . it being recognized that the hold-down cap tends to become distorted when the same is tightly screwed on the retainer . . . and which distortion oftentimes permits liquid to leak from the liquid sprayer . . ." (R. 506, 507). (Emphasis supplied.)

leakproof *pump seals* of the Calmar SS-40 (R. 66, 306) which Cook adopted after abandoning the imperfect *cap seal* of the patent in suit (Ex. C, R. 341, last paragraph, and R. 154, 156).

## V.

### The Court Overlooked the Fact That the Cap-to-Collar Seal and the Conventional Spray Pump Operate Separately and Independently of Each Other

The Court in stating at page 7 of the Opinion,

> "This novel 'marriage' of the sprayer with the insecticide container which took years in the discovery is neither taught by nor readily discernible from the application of mechanical skill to the elements of the prior art,"

overlooked or failed to give due weight to the fact that the "marriage" of the dispenser with the container is common to Lohse, Livingstone, and Mellon, and that the Mellon patent 2,586,687 (Exh. U, R. 410) discloses the identical "marriage" of the sprayer with the *insecticide* container, stating specifically that the device is "to spray liquid *insecticides*" (R. 411, col. 1, line 8).

The Court overlooked the fact that in the device of the patent in suit the cap-to-collar seal in no way cooperates with or modifies the operation of the admittedly old spray pump and is just as effective whether the pump is in the collar or is absent, that the old spray pump in no way cooperates with or modifies the cap-to-collar seal, that when [fol. 576] one is in use, the other is necessarily inoperative, that neither performs any new or different function or operation than that theretofore separately performed by them, and that the claims in suit call only for the mere aggregation of a cap-to-collar seal, old in the art as shown by the superior cap-to-collar seal of the Livingstone closure assembly, with the admittedly old spray pump and are

therefore invalid under *Lincoln Engineering Co.* v. *Stewart-Warner Corp.*, 303 U.S. 545, 549; 82 L. Ed. 1008, 1010; 58 S. Ct. 662, holding:

> "The mere aggregation of a number of old parts or elements which, in the aggregation, perform or produce no new or different function or operation than that theretofore performed or produced by them is not patentable invention."

Additionally, the Court overlooked the fact that its decision herein forecloses the public from its right to use the overcap and the overcap-to-collar seal of the antecedent Livingstone patent 2,715,480 to depress, house and *seal* the admittedly old spray pump as taught in Lohse patent 2,119,884, and confers upon appellee a monopoly of that right to use an antecedent invention.

To the end that Justice may be done in this cause, a rehearing by the Court sitting *en banc* is respectfully solicited.

For Calmar, Inc.:

Francis G. Cole, James P. Burns, Washington, D. C. 20005.

William H. Curtis, Kansas City, Missouri 64106.

For Colgate-Palmolive Co.:

Howard A. Crawford, Kansas City, Missouri 64105.

[fol. 577]

APPENDIX

UNITED STATES COURT OF APPEALS

FOR THE EIGHTH CIRCUIT

No. 17,540

---

CALMAR, INC., Appellant,

v.

COOK CHEMICAL COMPANY, Appellee.

---

No. 17,541

COLGATE-PALMOLIVE COMPANY, Appellant,

v.

COOK CHEMICAL COMPANY, Appellee.

---

CERTIFICATE OF COUNSEL UNDER EIGHTH CIRCUIT RULE 15(a)

It is hereby certified that the petition for rehearing in the above cause is submitted in good faith and believed by counsel and petitioners to be meritorious.

Attorneys for Calmar, Inc.:

William H. Curtis, Kansas City, Missouri.
Francis G. Cole, Washington, D. C.
James P. Burns, Washington, D. C.

Attorney for Colgate-Palmolive Company:

Howard A. Crawford, Kansas City, Missouri.

[fol. 578]

IN THE UNITED STATES COURT OF APPEALS

FOR THE EIGHTH CIRCUIT

September Term, 1964

No. 17540

No. 17541

[Titles omitted]

ORDER DENYING PETITION OF APPELLANTS FOR REHEARING EN BANC—October 9, 1964

There is before the Court appellants' petition for rehearing en banc and on consideration of such petition, It is the Order of the Court that the petition for rehearing en banc be, and it is hereby, denied.

---

[fol. 579]

IN THE UNITED STATES COURT OF APPEALS

FOR THE EIGHTH CIRCUIT

September Term, 1964

No. 17540

No. 17541

[Titles omitted]

ORDER DENYING MOTION OF APPELLANTS TO RECALL AND STAY ISSUANCE OF MANDATE—November 9, 1964

The Court has considered appellants' motion to recall mandate and for stay of mandate, and it now here ordered that the said motion be, and it is hereby, denied.

[fol. 580]

CLERK'S CERTIFICATE

UNITED STATES COURT OF APPEALS

FOR THE EIGHTH CIRCUIT

I, Robert C. Tucker, Clerk of the United States Court of Appeals for the Eighth Circuit, do hereby certify that the foregoing contains the two volume printed record on which the appeals from the United States District Court for the Western District of Missouri were heard and determined in said Court of Appeals, together with volume of the proceedings in said Court of Appeals consisting of full, true and complete copies of the Opinion and Judgment entered on August 21st, 1964; Petition of appellants for a rehearing en banc and Order denying same, and Order of said Court of Appeals denying Motion of appellants to recall and stay issuance of mandate, in the cases of Calmar Incorporated, Appellant vs. Cook Chemical Co., and Colgate-Palmolive Company, Appellant vs. Cook Chemical Co., Nos. 17540 and 17541, as full, true and complete as the originals thereof remain on file and of record in my said office.

I do further certify that on the 20th day of October, A. D. 1964, a Mandate was issued out of said Court of Appeals in said causes, directed to the United States District Court for the Western District of Missouri.

In Testimony Whereof, I hereunto subscribe my name and affix the seal of the United States Court of Appeals for the Eighth Circuit, at office in the City of St. Louis, Missouri, this ninth day of November, A. D. 1964.

(Seal)

Robert C. Tucker, Clerk of the United States Court of Appeals for the Eighth Circuit.

[fol. 581]

SUPREME COURT OF THE UNITED STATES

No. 778, October Term, 1964

---

CALMAR, INC., Petitioner,

v.

COOK CHEMICAL COMPANY.

---

ORDER ALLOWING CERTIORARI—March 29, 1965

The petition herein for a writ of certiorari to the United States Court of Appeals for the Eighth Circuit is granted. The case is consolidated with No. 810 and one hour is allotted for oral argument for both cases. The cases are set for argument immediately following No. 580.

And it is further ordered that the duly certified copy of the transcript of the proceedings below which accompanied the petition shall be treated as though filed in response to such writ.

[fol. 582]

SUPREME COURT OF THE UNITED STATES

No. 810, October Term, 1964

---

COLGATE-PALMOLIVE COMPANY, Petitioner,

v.

COOK CHEMICAL COMPANY.

---

ORDER ALLOWING CERTIORARI—March 29, 1965

The petition herein for a writ of certiorari to the United States Court of Appeals for the Eighth Circuit is granted. The case is consolidated with No. 778 and one hour is allotted for oral argument for both cases. The cases are set for argument immediately following No. 580.

And it is further ordered that the duly certified copy of the transcript of the proceedings below which accompanied the petition shall be treated as though filed in response to such writ.

## INDEX


| | Page |
|---|---|
| Opinions Below | 1 |
| Jurisdiction | 1 |
| Questions Presented | 2 |
| Introductory Statement | 2 |
| Constitutional Provisions and Statutes Involved | 3 |
| Statement of Facts | 3 |
| Reasons for Granting the Writ | 9 |
| I. As to the Certiorari Policy | 9 |
| II. As to the Substantive Issues | 16 |
| Conclusion | 21 |


---

APPENDIX


| | |
|---|---|
| A. Constitutional and Statutory Provisions | 1a |
| B. Opinion of the Court of Appeals | 3a |
| C. Judgment of the Court of Appeals | 12a |
| D. Order Denying Petition for Rehearing En Banc | 13a |
| E. Opinion of the District Court | 14a |


## CITATIONS

CASES:


Amp Inc. v. Vaco Products Co., 280 F. 2d 518 (7th Cir. 1960), cert. denied, 364 U.S. 921 (1960) ..... 12, 21

Beatty Safway Scaffold Co. v. Up-Right, Inc., 306 F. 2d 626 (9th Cir. 1962), cert. denied, 372 U.S. 934 (1963) ..... 11

Brulotte v. Thys Co., U. S. Supreme Ct., No. 20, decided November 16, 1964 ..... 16

Castro Convertible Corp. v. Bebry Bedding Corp., 291 F. 2d 306 (2d Cir. 1961), cert. denied, 368 U.S. 925 (1962) ..... 12, 21

Page

Cuno Engineering Corp. v. Automatic Devices Corp., 314 U.S. 84 (1941) ..... 11, 16
Electric Cable Joint Co. v. Brooklyn Edison Co., 292 U.S. 69 (1934) ..... 16
Great Atlantic & Pacific Tea Co. v. Supermarket Equipment Corp., 340 U.S. 147 (1950) ..... 10, 11, 13, 17, 19
Hartford-Empire Co. v. United States, 323 U.S. 386 (1945); 324 U.S. 570 (1945) ..... 15
Helms Products, Inc. v. Lakeshore Manufacturing Co., 227 F. 2d 677 (7th Cir. 1955) ..... 12
John Deere Co. v. Graham, 333 F. 2d 529 (8th Cir. 1964), cert. pending, No. 580 ..... 9
J. R. Clark Co. v. Geuder, Paeschke & Frey Co., 259 F. 2d 737 (7th Cir. 1958), cert. denied, 359 U.S. 914 (1959) ..... 12, 21
Jungersen v. Ostby & Barton Co., 335 U.S. 560 (1949) 17, 19, 21
Lorenz v. F. W. Woolworth Co., 304 F. 2d 102 (1962) 15, 19, 21
Norman v. Lawrence, 285 F. 2d 505 (2d Cir. 1960) ... 12, 21
Radiator Specialty Co. v. Micek, 327 F. 2d 554 (9th Cir. 1964), cert. denied, No. 121, October 12, 1964 .... 11
Reiner v. I. Leon Co., 285 F. 2d 501 (2d Cir. 1960), cert. denied, 366 U.S. 929 (1961) ..... 12, 21
Rogers v. Missouri Pacific R. Co., 352 U.S. 500 (1957) ..... 10, 12
Ry-Lock Co. v. Sears, Roebuck & Co., 227 F. 2d 615 (9th Cir. 1955), cert. denied, 350 U.S. 987 (1956) ..... 12
Squeez-A-Purse Corp. v. Stiller, 280 F. 2d 424 (6th Cir. 1960), cert. denied, 364 U.S. 828 (1960) ..... 12, 21
United States v. Besser Mfg. Co., 96 Supp. 304 (E. D. Mich. 1951), aff'd, 343 U.S. 444 (1952) ..... 15
United States v. Masonite Corp., 316 U.S. 265 (1942) 15
United States v. National Lead Co., 332 U.S. 319 (1947) ..... 15
United States v. New Wrinkle, Inc., 342 U.S. 371 (1952) ..... 15
United States v. Singer Mfg. Co., 374 U.S. 174 (1963) .. 15
United States v. United Shoe Machinery Corp., 110 F. Supp. 295 (D. Mass. 1953), aff'd per curiam, 347 U.S. 521 (1954) ..... 15

Page

United States v. United States Gypsum Co., 333 U.S. 364 (1948) ..... 15
United States v. Univis Lens Co., 316 U.S. 241 (1942).. 15
Zysset v. Popeil Bros., Inc., 276 F. 2d 354 (7th Cir. 1960), cert. denied, 364 U.S. 827 (1960), 318 F. 2d 701 (7th Cir. 1963), cert. denied, 376 U.S. 913 (1964) ..... 11

CONSTITUTIONAL PROVISIONS AND STATUTES:

28 U.S.C. § 1254(1) ..... 2
28 U.S.C. §1338(a) ..... 2
28 U.S.C. § 2201 ..... 2
Patent Code of 1952, 35 U.S.C. §§ 101-103 ..... 2, 3
U. S. Constitution, Article I, Section 8, Clause 8 ..... 3

MISCELLANEOUS:

"An Analysis of Patent Litigation Statistics," Staff Report, Subcommittee on Patents, Trademarks and Copyrights, Senate Judiciary Committee, 86th Cong., 2d Sess. (1961) .....9, 11, 15
Chin, The Statutory Standard of Invention; Section 103 of the 1952 Patent Act, 3 Patent, Trademark & Copyright J. of Res. & Ed. 317 (1959) ..... 9
Comment, 63 Colum. L. Rev. 306 (1963) ..... 9
Frank, Marble Palace (1958) .....13, 14
Stedman, The U. S. Patent System and Its Current Problems, 42 Texas L. Rev. 450 (1964) .....15, 20
U. S. Patent Office, Index of Patents (1963) ..... 14

IN THE

# Supreme Court of the United States

OCTOBER TERM, 1964

---

No.

---

CALMAR, INC., *Petitioner,*

v.

COOK CHEMICAL COMPANY, *Respondent.*

---

## PETITION FOR A WRIT OF CERTIORARI TO THE UNITED STATES COURT OF APPEALS FOR THE EIGHTH CIRCUIT

---

Petitioner, Calmar, Inc., prays that a Writ of Certiorari issue to review the judgment of the United States Court of Appeals for the Eighth Circuit in the above-entitled case.

### OPINIONS BELOW

The opinion of the Court of Appeals is reported at 336 F.2d 110, and is reprinted in the Appendix, p. 3a, *infra.* The opinion of the District Court for the Western District of Missouri is reported at 220 F. Supp. 414, and is reprinted in the Appendix, p. 14a, *infra.*

### JURISDICTION

The judgment of the Court of Appeals was entered on August 21, 1964 (Appendix, p. 12a, *infra*). A timely Petition for Rehearing En Banc was denied on October 9, 1964 (Appendix, p. 13a, *infra*). The jurisdic-

tion of this Court is invoked pursuant to 28 U.S.C. § 1254(1). The basis of jurisdiction in the District Court was 28 U.S.C. §§ 1338(a) and 2201.

## QUESTIONS PRESENTED

*As to the Certiorari Policy:* Should not this Court at this point end its practice of the past fourteen years of leaving final authority in patent cases to the Courts of Appeals—a practice which has caused a degradation of the standard of patentability, leading to unjustifiable monopolization of many segments of the economy—and participate once again in this field by granting certiorari in this extreme case which vividly illustrates the recurrent abuse and debasement of the constitutional standard of patentability?

*On the Merits:* Respondent's assignor obtained a patent (Scoggin, No. 2,870,943) purporting to cover the combination, with a finger-operated pump-type liquid sprayer, of a cap designed to hold the plunger of the pump down during shipment, and having various specified mechanical details. It is undisputed that the use of the pump-type sprayer, the use of the cap, and the use of the two together were old.

The question presented is: Whether, because of the addition to these old elements of a ring serving as a sort of washer between the cap and the plunger collar, an addition obvious and disclosed by the prior art, the patent in question embodies a patentable "invention" under the Constitution and §§ 101-103 of the Patent Code?

## INTRODUCTORY STATEMENT

For fourteen years this Court has not considered, on the merits, a case concerning the issue of patent validity. During this time, many Petitions for

Certiorari raising this issue have been presented to it. Analysis indicates that an average of ten such petitions are presented each Term. At least fifty cases per year involving the issue of patent validity are decided by the Courts of Appeals. Considerable diversity of opinion has developed in the Courts of Appeals as to the standard of patentability during these fourteen years. There is a line of cases—of which we submit this case is the nadir—in which the patenting of trivial gadgets has been countenanced by the Courts of Appeals.

We shall show in this Petition that this case furnishes an ideal opportunity for this Court, by granting certiorari, to reassert its authority and participate once again in the current of adjudication in this area. By doing so, it would support the Constitutional standard of patentability established by an unbroken line of its earlier decisions.

## CONSTITUTIONAL PROVISION AND STATUTES INVOLVED

This case involves Article I, Section 8, Clause 8, of the Constitution, and Sections 101, 102 and 103 of the Patent Code of 1952, 35 U.S.C. §§ 101, 102 and 103. These provisions are set forth in the Appendix, beginning at p. 1a, *infra.*

## STATEMENT OF FACTS

Petitioner is a distributor of finger-operated plastic sprayers for dispensing liquids. (R. 72)[1] Respondent is an insecticide manufacturer which, since 1956, has

[1] The record references are to the two-volume printed record prepared for the Court of Appeals. Volume 1 (pp. 1-339) contains the pleadings and judgment, and the transcript of the testimony printed for the Court of Appeals; Volume 2 (pp. 341-553) contains the exhibits submitted to the Court of Appeals, including the various patents involved. We have filed nine copies of this record with this Petition.

also been engaged in the manufacture of finger-operated plastic sprayers. (R. 50, 55)

In 1959, U. S. Patent No. 2,870,943 was issued to respondent as assignee of one Baxter I. Scoggin, Jr. (R. 510). The device involved in the patent is shown below:

Scoggin Pat. 2,870,943
Fig. 1

Scoggin Pat. 2,870,943
Fig. 2

(See Ex. 10, R. 510)

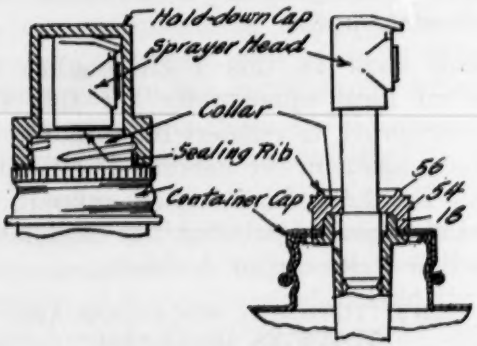


At this time, petitioner was selling its plastic sprayer with hold-down cap, which it had developed in 1958 (R. 75, 77), called the Calmar SS-40. This was sold to the trade, including insecticide manufacturers competing with respondent. (R. 74). Respondent charged that petitioner's SS-40 infringed the Scoggin patent. (R. 2, 3). Petitioner then sued respondent in the District Court for a declaratory judgment that the Scoggin patent was not valid, or was not infringed; respondent counterclaimed for infringement. (R. 1-4).

The Scoggin patent had nothing to do with the pump or plunger itself; it simply related to certain details of the cap to be used over the plunger. (R. 512).

Moreover, it was undisputed that there was nothing new in the idea of applying a screw-threaded cap over a liquid-dispenser plunger to hold it down and provide a seal over the dispenser during shipment. (R. 26). A striking example of this idea is found in Lohse Patent No. 2,119,884, issued in 1938, which had long since expired when the events in suit occurred (R. 407):

Lohse Pat. 2,119,884
Fig. 1.

Lohse Pat. 2,119,884
Fig. 2.

(See Ex. T, R. 407)

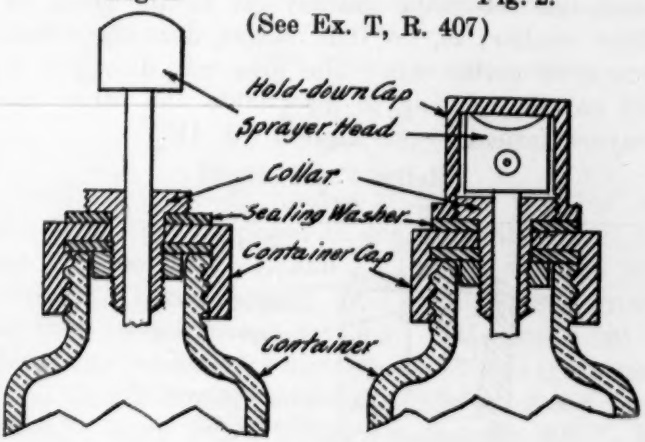


The only difference between the device illustrated in the old Lohse patent, and the device in the Scoggin patent—which was manufactured by respondent from August 1957 until November 1959 as the "Bakan 2" sprayer[2]—is that the Scoggin device effects a seal above the screw threads in the cap, while the Lohse device effects a seal below the screw threads.—The

[2] The Bakan 2 sprayer, like Petitioner's sprayer, is of the sort sold on liquid tire cleaners, spray starches, insecticides, and the like, in supermarkets and grocery stores.

idea of the cap, like most bottle caps, is to keep the contents in the bottle and not let them leak out. The reason for the seal is to prevent any liquid which might have flowed out of or around the plunger into the overcap, from further flowing out of the overcap. In the Scoggin device a rib in the underside of the overcap pressed against the top of the plunger collar.

The idea of effecting a seal for fluids above a thread[3] is, of course, old as well as obvious. The common garden-hose coupling employs it in the form of a rubber washer; as, for that matter, does the ordinary screw-type bottle cap. The idea was disclosed in a 1952 patent, relating to insecticide and other liquid sprayers, issued to one Mellon (R. 410):

Mellon Pat. 2,586,687
Fig. 3
(See Ex. U, R. 410)

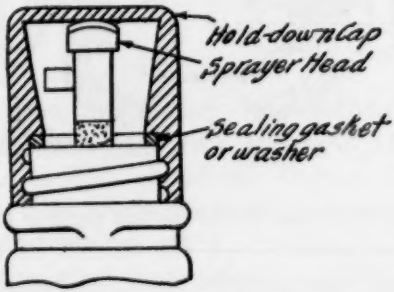


[3] It is said that the location of the seal was necessary to prevent the threads from "corroding." (Respondent's Ct. Apps. Br. 50). Why this would be necessary in a plastic device is mysterious. Scoggin testified that his experiments indicated that the top of the bottle cap, below the overcap threads, was an unsuitable place to put the seal. (R. 151). But the device produced commercially under the Lohse patent, which used a seal below the threads, produced a satisfactory, leak-proof assembly. (R. 286). In any event, the basic point is that relocating the seal is not "invention," either in itself or in light of the prior art.

Moreover, two patents issued for spout covers to one Livingstone in 1955 and 1956 disclosed this idea; in fact, in a form superior to that exemplified in the Scoggin patent. (R. 385, 390). We illustrate one:

Livingstone Pat. 2,715,480

Cap of Fig. 8

(See Ex. H, R. 385)

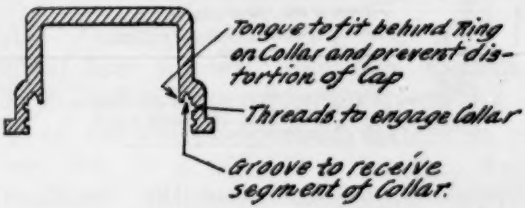


Petitioner's SS-40 used a different type of seal joint from that disclosed in the Scoggin patent and used in respondent's Bakan 2. Petitioner's seal joint (similar to Livingstone's) used a tongue and groove, like that used in wood flooring. This seal joint inhibited the tendency to distortion and leakage present in the simple contact seal illustrated in the Scoggin patent.[4] More importantly, Petitioner's SS-40 had internal pump seals which prevented the liquid from getting out of, or around, the plunger into the overcap. (R. 305-07). Less than a year after the introduction of petitioner's SS-40, respondent modified its

[4] In a later patent application, Scoggin admitted the distortion caused by the very seal which he had patented. (R. 507). Moreover, the respondent, in announcing the Bakan 2 Modified, an improved version of its overcap (adopting petitioner's seal), publicly admitted that the Scoggin seal was imperfect. (R. 341).

"Bakan 2" to make the overcap seal conform generally to the Calmar SS-40[5] (R. 341):

| Calmar SS 40 | Bakan 2—Modified |
|---|---|
| (See Ex. QQ, R. 475) | (See Ex. 90, R. 517) |

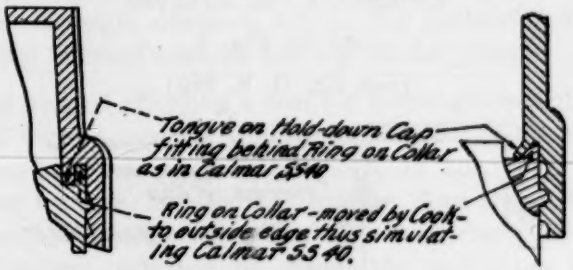


The District Court held that the "combination of the admittedly old and known elements employed by Scoggin" was a patentable invention; that Scoggin Patent No. 2,870,943 was valid; and that petitioner's SS-40 sprayer infringed it.[6]

The Court of Appeals affirmed.

---

[5] This modification (the "Bakan 2 Modified") was on the market in November 1959. (R. 341). By mid-1960, respondent had also introduced a new model, the Bakan 3, with internal pump seals which, like petitioner's SS-40 introduced over a year before, prevented the toxic contents of the bottle from flowing into the overcap. (R. 157).

[6] The District Court reserved jurisdiction with respect to the amount of damages to be awarded respondent for the infringement; and certified, under Fed. R. Civ. Proc. 54(b), that there was no reason for delay in entering judgment on the issues of validity and infringement, and directed entry of judgment thereon. (R. 37-38).

## REASONS FOR GRANTING THE WRIT

### I. AS TO THE CERTIORARI POLICY

This Court has not heard a patent case involving the issue of validity for fourteen years. An average of about fifty cases involving the issue of patentability are decided annually in the Courts of Appeals,[7] and numerous petitions for certiorari to review those decisions have been presented to this Court in this period.

It seems fair to say that this Court's long-continued failure to hear a case involving this issue is itself one of the most important factors in present-day patent law. It is difficult to imagine that many of the recent decisions[8] upholding patents on petty gadgets, including the decision below—which while paying lip service to this Court's prior holdings obviously applies a trivial standard of invention—could have been rendered had there been a tradition of active supervision by the Court in this area.

Congressional Committee studies and legal commentators[9] have dwelt on the doctrinal diversity

---

[7] See, in particular, the statistics for 1951-58 collected in "An Analysis of Patent Litigation Statistics," Staff Report, Subcommittee on Patents, Trademarks and Copyrights, Senate Judiciary Committee, 86th Cong., 2d Sess. 24-25 (1961).

[8] See the cases collected in note 13, *infra*.

[9] See "An Analysis of Patent Litigation Statistics," *supra* note 7, at 1; Comment, 63 Colum. L. Rev. 306, 324 (1963); Chin, The Statutory Standard of Invention; Section 103 of the 1952 Patent Act, 3 Patent, Trademark & Copyright J. of Res. & Ed. 317, 322 (1959). The forum shopping that the situation produces is commented on in the Congressional Committee study, "An Analysis of Patent Litigation Statistics," *supra*, at 30 n. 6. The differences in approach are encountered even among different panels of the same court. Compare the present case with the decision of another panel of the 8th Circuit in *John Deere Co.* v. *Graham*, 333 F. 2d 529 (1964), cert. pending, No. 580.

among the Courts of Appeals, caused by the absence of any decision of this Court concerning the question of patent validity in the past fourteen years. But perversion of the standard of patentability which this Court had repeatedly announced in its decisions through 1950 need not necessarily take the shape of explicit assertions in the Courts of Appeals that this Court's decisions no longer state the law.[10] The Constitutional standard of patentability can be just as effectively watered down by a pattern of adjudication —ostensibly on the basis of determinations of fact— which has the practical effect of causing that standard to be debased. *Cf. Rogers* v. *Missouri Pacific R. Co.*, 352 U.S. 500, 509-10 (1957).

We submit that the present case, in which the Patent Office patented—and the lower courts sanctioned the patenting of—a transitory, petty refinement of a gadget containing nothing worthy of the name of invention, is an appropriate place for this Court to reassert its supervisory power over the Courts of Appeals in order to preserve the standards laid down by its decisions. Statistical evidence indicates that the restatement and reiteration of the governing standard of invention by

---

[10] There are such explicit assertions in certain of the cases. See Comment, 63 Colum. L. Rev. 306, 324 (1963). These assertions grow out of the conflict in the Courts of Appeals as to whether the passage of the Patent Code of 1952 had the effect of lowering the standard of invention laid down by this Court's decisions in the field discussed at pages 16-18, *infra*, culminating in the case of *Great Atlantic & Pacific Tea Co.* v. *Supermarket Equipment Corp.*, 340 U.S. 147 (1950). Obviously this patent could only, in point of fact, be upheld by applying a greatly reduced standard of invention, despite the language of the Court below. If certiorari is granted, we shall of course argue that Congress in enacting the 1952 Patent Code did not mean to lower the substantive standard of invention applied in the decisions of this Court.

this Court from time to time has a positive effect in supporting that standard in the lower courts.[11]

But even if it were assumed that a reiteration of the governing principles would not *in itself* be effective, we urge nonetheless that the Court here abandon the approach of non-review of this issue which it has embraced for over a decade. The present decision—though apparently the worst—is not an isolated example of the debasement of the standard of patentability by the Courts of Appeals.[12] This repeated misapplication of the standard of invention in the Courts of Appeals, in upholding patents on trivial refinements in gadgets,[13] indicates that this

---

[11] It is reported that a drop in the number of litigated patents upheld in the courts followed this Court's decision in *Cuno Engineering Corp.* v. *Automatic Devices Corp.*, 314 U.S. 84 (1941). See Comment, 63 Colum. L. Rev. 306, 308 (1963). Moreover, an analysis of the tables set forth in "An Analysis of Patent Litigation Statistics," *supra* note 7, at 24-25, indicates that the statistical incidence of patents being held invalid was higher for the first four-year period following this Court's last decision in the area of patent validity, *Great Atlantic & Pacific Tea Co.* v. *Supermarket Equipment Corp.*, 340 U.S. 147 (1950), than in the second four-year period. Upon comparison of the periods 1951-54 and 1955-58, it appears that while the total number of patents declared invalid in the Courts of Appeals was almost exactly the same during the two periods, the number of patents upheld increased more than 50 per cent in the second period over the first.

[12] However, the decision's emphasis on the "commercial success" of the application of the patent is extreme and, as we discuss below, poses a clear, independent ground for review.

[13] Other examples include: *Radiator Specialty Co.* v. *Micek*, 327 F. 2d 554 (9th Cir. 1964), cert. denied, No. 121, October 12, 1964 (toilet flusher); *Zysset* v. *Popeil Bros., Inc.*, 276 F. 2d 354 (7th Cir. 1960), cert. denied, 364 U.S. 827 (1960), 318 F. 2d 701 (7th Cir. 1963), cert. denied, 376 U.S. 913 (1964) (vegetable chopper); *Beatty Safway Scaffold Co.* v. *Up-Right, Inc.*, 306 F. 2d 626 (9th Cir. 1962), cert. denied, 372 U.S. 934 (1963) (hinged framework

Court should begin once again to participate in the decisional process in this area.

Review should thus be granted in this case on a supervisory basis to "correct instances of improper administration" of the governing standard and "prevent its erosion" by a pattern of repeated misapplication. *Rogers* v. *Missouri Pacific R. Co., supra,* at 509. Cases like *Rogers* teach that the certiorari jurisdiction exists not only to enunciate the governing legal standards, but to ensure their application in practice where there is substantial and clear evidence of their misapplication. As this Court has recognized, the standards are meaningless if not applied. This Court thus has a supervisory or policing function to perform. As a perceptive commentator has put it: "Nonetheless, harking back to the instances discussed

---

for scaffolding); *Castro Convertible Corp.* v. *Bebry Bedding Corp.*, 291 F. 2d 306 (2d Cir. 1961), cert. denied, 368 U.S. 925 (1962) (ottoman convertible into bed); *Reiner* v. *I. Leon Co.*, 285 F. 2d 501 (2d Cir. 1960), cert. denied, 366 U.S. 929 (1961) (metal hair curl clip); *Norman* v. *Lawrence*, 285 F. 2d 505 (2d Cir. 1960) (rubber earring pads); *Squeez-A-Purse Corp.* v. *Stiller*, 280 F. 2d 424 (6th Cir. 1960), cert. denied, 364 U.S. 828 (1960) (rubber coin purse); *Amp Inc.* v. *Vaco Products Co.*, 280 F. 2d 518 (7th Cir. 1960), cert. denied, 364 U.S. 921 (1960) (screw cutter); *J. R. Clark Co.* v. *Geuder, Paeschke & Frey Co.*, 259 F. 2d 737 (7th Cir. 1958), cert. denied, 359 U.S. 914 (1959) (ironing board); *Ry-Lock Co.* v. *Sears, Roebuck & Co.*, 227 F. 2d 615 (9th Cir. 1955), cert. denied, 350 U.S. 987 (1956) (device for holding frameless window screens through levers on the sill); *Helms Products, Inc.* v. *Lakeshore Manufacturing Co.*, 227 F. 2d 677 (7th Cir. 1955) (springs holding backlighted transparent picture tight in frame).

We do not mean to suggest that the current of adjudication in the Courts of Appeals represented by this case and those cited is universal or close to it. Numerous decisions in the Courts of Appeals appear properly to apply the standards enunciated by this Court.

earlier, the fields of patents and of jury trials . . . the Court's practical choices are either to give up the battle and accept defeat or to say 'No, no, no.'" Frank, Marble Palace (1958), p. 288.

That a District Court, and a unanimous Court of Appeals, could come to find invention in a bottle cap, demonstrates the consequences of this Court's approach of non-review in patent validity cases. "Perhaps the greatest single failure of the Supreme Court is in relation to the patent system. . . . To sum it up, in the war between the Patent Office and the Supreme Court, the Supreme Court has lost." *Id.*, at 24, 27.

This case, we submit, offers an ideal opportunity for this Court once again to participate in the course of adjudication in this area, and by its participation to curb the lowering of standards of which this case and the other Court of Appeals cases cited above are indicative. This case does not involve an abstruse patent in the field of electronics or chemistry, but a simple, mechanical patent on an everyday household gadget. Moreover, it involves a combination patent; a type of patent which affords a particular opportunity for abuse—through the subtraction of old elements from the public domain—and with respect to which it is essential that proper standards be maintained.[14] The implications of this upon the ideal of free competition are obvious. Finally, the case affords the Court an opportunity to halt the spread of a doctrine which makes commercial success or com-

---

[14] See *Great Atlantic & Pacific Tea Co.* v. *Supermarket Equipment Corp.*, 340 U.S. 147, 151-52 (1950).

mercial innovation a substitute for the basic constitutional requirement of invention.[15]

Certainly there is every reason for the Court to step into the current of adjudication in this area once again at this time. The Patent Office grants about 50,000 patents, on the average, per year.[16] The record of this case vividly illustrates the practice it follows in granting a patent if there is any detail, however trivial, not explicitly and completely covered by the prior art.[17] It is notorious, and has been noted by

---

[15] We discuss this point at pages 18-21, *infra*.

[16] U.S. Patent Office, Index of Patents (1963), p. 1123. "At the other end of the production line, the Patent Office, which controls this endless sausage-grinder, rolls out the product and refuses to budge. An intensive reading of ten years of the *Journal of the Patent Office Society* reveals that the Office has taken every attitude about its invariable reversals in the Supreme Court, except one: nowhere has there been an expression of a desire to comply with the decisions . . ." Frank, Marble Palace (1958), p. 26.

[17] At first, the Scoggin patent application claimed the whole spray pump and plunger, as well as an overcap, in the broadest terms. (R. 353-54; 243). After rejection of the original claims, the making of further claims, and their rejection in turn (R. 358-69), in which twenty-four claims were submitted and rejected or cancelled, Scoggin finally focused on the seal and the idea of providing a clearance between the bottom of the overcap and the shoulder of the plunger assembly, so that the seal could be effected when the overcap was screwed on. (R. 251, 370-73). This followed upon an interview, as Scoggin put it, "courteously granted by the Honorable Examiner and the cooperation received in the drafting of allowable claims." (R. 371). As petitioner's expert, former Patent Commissioner Lawrence Kingsland, put it: "I have seen it happen where there is an interview with the Examiner, and the Examiner says, 'Well, I don't see much in it, but I haven't a direct reference.'" (R. 254). As a perceptive observer has put it: "The situation is aggravated, however, by still other factors. The most serious of these is the *ex parte* nature of the proceedings, as a result of which only the examiner's sense of public duty and conscientiousness stand in the way of granting the applicant's re-

Committees of Congress, that the Office's standards of invention are materially lower than those applied by the courts.[18]

The consequences to the goal of free competition in the national economy implicit in the standards of the Patent Office are obvious. Each improperly issued patent has the capacity of subjecting industry to an improper monopoly for a period of seventeen years. Moreover, the aggregation of a great number of patents, good, bad and indifferent, is a frequent tool of the antitrust violator;[19] and this and other types of patent misuse are greatly aided by low standards in issuing and judicially reviewing patents.

---

quest for a patent . . . . The whole thrust of the administrative process in the Patent Office pushes the examiner in the direction of allowing, rather than disallowing, applications." Stedman, The U. S. Patent System and its Current Problems, 42 Texas L. Rev. 450, 476 (1964).

[18] See the references to various Subcommittee Reports discussing the "continuing gap between the views of the Patent Office and the U. S. Courts as to what is and what is not patentable" set out in "An Analysis of Patent Litigation Statistics," *supra* note 7, at 1. As a panel of the Court of Appeals for the Second Circuit once dryly commented: "Since 1950, eighteen patents on different variations of hardware for use in reclining chairs with movable leg-rests have been issued. Obviously there have not been eighteen 'inventions' in this narrow area in the last twelve years." *Lorenz* v. *F. W. Woolworth Co.*, 305 F. 2d 102, 105 n. 6 (1962).

[19] See *United States* v. *Univis Lens Co.*, 316 U.S. 241 (1942); *United States* v. *Masonite Corp.*, 316 U.S. 265 (1942); *Hartford-Empire Co.* v. *United States*, 323 U.S. 386 (1945); 324 U.S. 570 (1945); *United States* v. *National Lead Co.*, 332 U.S. 319 (1947); *United States* v. *United States Gypsum Co.*, 333 U.S. 364 (1948); *United States* v. *New Wrinkle, Inc.*, 342 U.S. 371 (1952); *United States* v. *Besser Mfg. Co.*, 96 F. Supp. 304 (E.D. Mich. 1951), aff'd, 343 U.S. 444 (1952); *United States* v. *United Shoe Machinery Corp.*, 110 F. Supp. 295 (D. Mass. 1953), *aff'd per curiam*, 347 U.S. 521 (1954); and *United States* v. *Singer Mfg. Co.*, 374 U.S. 174 (1963).

This Court recently struck down an attempt by a patentee to extend the life of his patent beyond the seventeen years provided by law. *Brulotte* v. *Thys Co.*, No. 20, decided November 16, 1964. But more serious is the neglected problem of the extension of the patent monopoly to devices which are not inventions. We respectfully submit that this case furnishes an excellent opportunity for this Court to exercise its supervisory powers to prevent further erosion of the standard of patentability.

## II. AS TO THE SUBSTANTIVE ISSUES

1. *Debasement of the Standard of Invention.*—On its merits, this case represents the nadir of a long line of recent cases in which the Courts of Appeals have sanctioned the patenting of petty modifications in trivial gadgets. This drift in the decisions of the lower courts makes a mockery of the standard of "invention" laid down in the Constitutional provision dealing with patents, and in the leading decisions of this Court. The patented bottle cap itself—nine examples of which we have lodged with the Clerk—is the strongest witness of the lack of invention in the patent at bar.

In *Electric Cable Joint Co.* v. *Brooklyn Edison Co.*, 292 U.S. 69, 79 (1934), this Court stressed that what was required for patentability was "invention, not the mere exercise of the skill of the calling." In *Cuno Engineering Corp.* v. *Automatic Devices Corp.*, 314 U.S. 84 (1941), the Court observed that the statute required (as it still does, 35 U.S.C. § 101) that "the device must not only be 'new and useful', it must also be an 'invention' or 'discovery' " (*Id.*, at 90).

Enunciating the standard involved, and stressing its derivation from the Constitution, this Court has

declared that the patentee's "skill in making [his] contribution" must reach "the level of inventive genius which the Constitution, Art. I, § 8, authorizes Congress to reward." (*Id.*, at 91). In *Jungersen* v. *Ostby & Barton Co.*, 335 U.S. 560, 566 (1949), the Court reiterated that the standard of patentability is "inventive genius." In its most recent decision in this field, *Great Atlantic & Pacific Tea Co.* v. *Supermarket Equipment Corp.*, 340 U.S. 147, 150 (1950), the Court reiterated the need for "invention."

The exercise of "inventive genius" in this case consisted of taking a plunger cap which had been fully disclosed in a twenty-year-old expired patent (Lohse), and changing the location of the cap seal—to a location in turn taught in a seven-year-old patent (Mellon)![20] The technique of the seal was, at the very most, as sophisticated as the common washer, and is old in the art.

It is ludicrous to think of the patent in suit as pushing back the frontiers of physics or of mechanics. It represents not an act on the stage of the unfolding of man's knowledge of the physical world about him, but an episode in the puppet theatre of gadgetry. —And a minor episode, at that, because even to the trivial subject matter to which it addressed itself, it contributed nothing new or lasting.[21]

---

[20] Moreover, the Livingstone patents taught the location and an even superior technique for the cap seal. See p. 7, *supra*.

[21] As noted in the Statement of Facts, by the time the patent issued, petitioner was using an improved type of overcap seal, which respondent itself adopted by the end of the year. Moreover, by the time the patent issued petitioner had come forward with internal seals in the pump itself, which prevent the toxic substances from even entering the overcap, from which they will of course flow when removed by the housewife. Respondent, again, followed suit with this same improvement over a year later in the Bakan 3.

The court below protested that it was applying the "exacting standard" of this Court's decisions. But in sanctioning the patent in suit the court below paid mere lip service to that standard. It is hard to conceive of a more lax standard than the one which grants the tinker's rearrangement in question here a seventeen-year monopoly. We submit that, in a century in which man has unlocked the secrets of the atom and in which travel to the moon lies at his feet, it is a perversion of language and law to call the reshuffling of the elements of a bottle cap an invention.

A case which demonstrates the drift to lax standards as vividly as this one, warrants this Court's corrective intervention by way of certiorari. It is hard to imagine what sort of gadget could not be patented if the approach of the decision below, left unreversed, were followed.

2. *Commercialization Substituted for Invention.*— The real basis for the decision below was not the presence of any invention in the bottle cap shown in respondent's patent but the "commercial success" of respondent's sprayer. (See App., pp. 8a-9a, *infra.*) Nothing more is meant by this than the fact that respondent was first to mass-market liquid insecticide with an in-place plastic sprayer and overcap.[22] The

[22] The District Court found that the respondent's patent was a commercial success apparently on the basis of the fact that respondent sold "millions" of the devices (including, of course, mounting them on its own insecticides). But the record is undisputed that the respondent's sales the first year it introduced the device did not increase and in fact may have declined. (R. 62). This is an odd form of "commercial success." The record is also clear that the device produced under the Scoggin patent, the Bakan

holding flies in the face of this Court's admonition that "commercial success without invention will not make patentability," *Great Atlantic & Pacific Tea Co.* v. *Supermarket Equipment Corp., supra,* at 153, and its characterization of it as, necessarily, a "make-weight," *Jungersen* v. *Ostby & Barton Co.,* 335 U.S. 560, 567 (1949). "In cases of patents on devices improving an existing product, there is every reason to severely limit the weight attributed to commercial success. The distinction between a mere improvement and an invention is well known in the law of patents, and incorporation of a device by manufacturers can be explained solely by the former." *Lorenz* v. *F. W. Woolworth Co.,* 305 F. 2d 102, 104 n. 4 (2d Cir. 1962). "Most important, it must be emphasized that the patent system is written in terms of encouraging and protecting invention, *not* innovation." Stedman, *The*

---

2 sprayer, was primarily developed for use on respondent's own insecticides. (R. 153). It was not until a year after respondent introduced its sprayer cap that it began to sell it to other concerns. (R. 153). It was not long thereafter that respondent had to bring out its improved Bakan 2 Modified model, adopting the seal used by petitioner (R. 341), and that Scoggin himself filed a further patent application (R. 496) in which he admitted that existing devices (presumably his own) were "prone to leak" (R. 497) and that what was needed was a device that prevented "leakage into the cap" (R. 497), that is, the internal pump seals already found on petitioner's SS-40.

The only other evidence of commercial success, besides respondent's understandable use of its own device, was the testimony of an executive of a liquid window cleaner concern. He testified that his product's sales increased substantially after he began using the Bakan 3 device. But previously, he had furnished no sprayer whatsoever with his product (while the label blithely instructed the housewife to "Spray on"); moreover, it should be remembered, the Bakan 3 device was respondent's ultimate model, which followed the features of petitioner's SS-40 and not the device disclosed in the Scoggin patent, which was admittedly imperfect. (R. 157, 341).

*U. S. Patent System and its Current Problems,* 42 Texas L. Rev. 450, 474 (1964).[23]

The reasons for this Court's rule about commercial success are vividly demonstrated by the facts at bar. Respondent receives a seventeen-year monopoly for no reason other than being the first company to happen to market a particular gadget in quantity. The result —particularly in the area of mass-marketed consumer goods—is to put a premium not on invention, but on factors alien to it, such as sales promotion, manufacturing technique, ready access to markets, and advertising techniques. The approach of the Court below favors the vertically integrated operator—like respondent, with a ready captive market in its insecticide manufacturing operations; it favors the corporate technician,[24] with immediate commercial outlet for his developments, over the independent inventor; it favors the production of gadgets with immediate commercial application o the performance of basic research.

In short, the test of commercial success applied below, in contradiction of the policies embodied in the antitrust laws, extends monopoly on the basis of promotional success[25] or distributional advantage,

---

[23] "An increasingly popular contention is that the patent system is not limited to stimulating inventive activity, but plays an equally or more important role in encouraging commercial *exploitation* and *innovation*. . . . [B]ut the fact remains that our patent system is *not* written in these terms. The criterion for patenting is the creation of an 'invention'. . . . *Id.*, at 454.

[24] Scoggin was an officer of the respondent corporation (R. 144).

[25] One of the attractive features of the Bakan 2 device, used on respondent's insecticides, was that the relatively flat top of the overcap furnished a convenient place for the supermarket to stamp the price. (R. 306). There was no evidence causally linking the so-called "commercial success" enjoyed by the Bakan 2 with any "invention" it might have embraced. This has been

while ignoring invention—the only constitutional basis for the patent monopoly.

This case accordingly provides, in addition to a vivid example of the application of a debased standard of invention, an object lesson in the anticompetitive effect of the substitution of commercialization for invention. A growing number of the recent decisions permitting the patenting of trivial devices are engaging in this fallacy.[26] This factor furnishes an independent reason making this case an appropriate vehicle for the grant of certiorari.

## CONCLUSION

For the reasons stated, this Petition for Certiorari should be granted.

Respectfully submitted,

ABE FORTAS
VICTOR H. KRAMER
DENNIS G. LYONS
1229 Nineteenth Street, N.W.
Washington, D. C. 20036
*Attorneys for Petitioner*

*Of Counsel:*

FRANCIS G. COLE
WATSON, COLE, GRINDLE & WATSON

ARNOLD, FORTAS & PORTER

December 1964.

---

repeatedly held a fatal omission. See *Jungersen* v. *Ostby & Barton Co., supra,* at 568; *Lorenz* v. *F. W. Woolworth Co.,* 305 F. 2d 102, 104 n. 4 (2d Cir. 1962).

[26] See *Castro Convertible Corp.* v. *Bebry Bedding Corp., supra,* 291 F. 2d, at 307-08; *Reiner* v. *I. Leon Co., supra,* 285 F. 2d, at 503-04; *Norman* v. *Lawrence, supra,* 285 F. 2d, at 506; *Squeeze-A-Purse Corp.* v. *Stiller,* 175 F. Supp. 667, 669 (N.D. Ohio 1959), *aff'd per curiam,* 280 F. 2d 424, *supra; Amp Inc.* v. *Vaco Products Co.,* 280 F. 2d, at 519; *J. R. Clark Co.* v. *Geuder, Paeschke & Frey Co., supra,* 259 F. 2d, at 738.

## APPENDIX A

### Constitutional and Statutory Provisions

1. Article I, Section 8, Clause 8, of the Constitution provides:

> The Congress shall have Power . . .
>
> . . . .
>
> To promote the Progress of Science and useful Arts, by securing for limited Times to Authors and Inventors the exclusive Right to their respective Writings and Discoveries. . . .

2. Sections 101, 102 and 103 of the Patent Code of 1952 provide (35 U.S.C. §§ 101-03):

**§ 101. Inventions patentable**

> Whoever invents or discovers any new and useful process, machine, manufacture, or composition of matter, or any new and useful improvement thereof, may obtain a patent therefor, subject to the conditions and requirements of this title.

**§ 102. Conditions for patentability; novelty and loss of right to patent**

> A person shall be entitled to a patent unless—
>
> (a) the invention was known or used by others in this country, or patented or described in a printed publication in this or a foreign country, before the invention thereof by the applicant for patent, or
>
> (b) the invention was patented or described in a printed publication in this or a foreign country or in public use or on sale in this country more than one year prior to the date of the application for patent in the United States, or

(c) he has abandoned the invention, or

(d) the invention was first patented or caused to be patented by the applicant or his legal representatives or assigns in a foreign country prior to the date of the application for patent in this country on an application filed more than twelve months before the filing of the application in the United States, or

(e) the invention was described in a patent granted on an application for patent by another filed in the United States before the invention thereof by the applicant for patent, or

(f) he did not himself invent the subject matter sought to be patented, or

(g) before the applicant's invention thereof the invention was made in this country by another who had not abandoned, suppressed, or concealed it. In determining priority of invention there shall be considered not only the respective dates of conception and reduction to practice of the invention, but also the reasonable diligence of one who was first to conceive and last to reduce to practice, from a time prior to conception by the other.

**§ 103. Conditions for patentability; non-obvious subject matter**

A patent may not be obtained though the invention is not identically disclosed or described as set forth in section 102 of this title, if the differences between the subject matter sought to be patented and the prior art are such that the subject matter as a whole would have been obvious at the time the invention was made to a person having ordinary skill in the art to which said subject matter pertains. Patentability shall not be negatived by the manner in which the invention was made.

## APPENDIX B

### Opinion of the Court of Appeals

UNITED STATES COURT OF APPEALS
FOR THE EIGHTH CIRCUIT

No. 17,540

CALMAR, INCORPORATED, *Appellant,*

v.

COOK CHEMICAL COMPANY, *Appellee.*

No. 17,541

COLGATE-PALMOLIVE COMPANY, *Appellant,*

v.

COOK CHEMICAL COMPANY, *Appellee.*

Appeals from the United States District Court
for the Western District of Missouri

[August 21, 1964.]

Before VAN OOSTERHOUT, RIDGE and MEHAFFY, Circuit Judges.

MEHAFFY, Circuit Judge.

Appellants, Calmar, Incorporated, and Colgate-Palmolive Company, brought seperate actions for declaratory judgment against appellee, Cook Chemical Company, seeking a ruling of invalidity and noninfringement of United States Patent No. 2,870,943 filed on March 4, 1957 and issued on January 27, 1959 to inventor Baxter I. Scoggin, Jr. Cook had acquired ownership of the patent and counterclaimed alleging its validity, infringement by both appellants and unfair competition on the part of Colgate. All actions were consolidated for trial, but hearing on the unfair competition charge against Colgate was deferred pending the outcome of the issues of validity and infringe-

ment. Jurisdiction and existence of a justiciable controversy obtain. The District Court in an opinion published in 220 F.Supp. 414 found the patent valid and infringed, and we affirm.

The Scoggin patent in issue will be referred to as Cook-Bakan 2 and the accused device as Calmar SS-40. The undisputed factual background may be briefly recounted. Cook has been in the household insecticide business since 1945. Until 1947 Cook utilized metal sprayers as a dispenser for its product, trademarked "Real Kill", but in that year it first purchased newly developed plastic sprayers from Calmar as a sales promotion gimmick and attached them to the outside of its bottles of insecticide with a separate holder. Successful sales reaction to the idea necessitated its continued practice. Prior to 1956 Cook purchased its sprays from Calmar, but thereafter manufactured its own sprayers through a subsidiary, Bakan Plastics Company. In 1954 Colgate-Palmolive entered the household insecticide field with an aerosol container labeled "Kan Kill". In 1958 Colgate was marketing its "Kan Kill" in liquid, as well as aerosol, form, using a Calmar sprayer attached separate to a glass container, the combination of which resembled Cook's bottle of liquid "Real Kill" with accompanying Bakan sprayer. Marketing of both manufacturers' products with separately attached plastic sprayers posed extra handling and expense problems. The bottler had to affix the cardboard or plastic holder on the neck of the bottle and insert therein the sprayer. More vexatious were the problems of breakage of the flimsily secured sprayer during shipment and pilfering while on the retailer's shelf. With the advance of the pressurized aerosol container, competition became acute due to the convenient shipment and use of the aerated sprayer, which required only that the housewife remove the sprayer cap and depress a button releasing the gasified

insecticide. The liquid insecticide makers were aware of their product's shipping and operation shortcomings, and plagued by the apparent need for a container with an integrated sprayer-pump which could be safely shipped without breakage or leakage. Despite the extensive research and experimentation given the problem by Calmar, Cook and others for a period of some ten years, no solution was forthcoming until conception and commercialization of the Cook-Bakan-2, described by its inventor as a "Pump-Type Liquid Sprayer Having Hold-Down cap".

The sprayer pump, although not the patentable device in suit, has as its upper element, a head containing an orifice, connected with an internal pump through which a dip tube extends to the liquid in the container below. When the sprayer head is depressed, the pump is actuated and causes the liquid in spray form to be emitted.

It was a simple matter to incorporate the sprayer in the container rather than employ the ordinary non-perforated cap with sprayer seperately attached, but such an arrangement did not lend itself to shipping because the sprayer would accidently pump the liquid out in transit. The sprayer head had to be combined and shielded with some type of overcap which maintained the plunger in a depressed position minimizing leakage from the pump of the low viscous insecticide or other similar liquids, while retaining any such leakage within the overcap through a liquid-tight seal until the cap was removed and the product put into use by the consumer.

Scoggin described his answer to these liquid manufacturers' dilemma in the specifications of his patent application as an invention relating to "improvements in structures for dispensing liquids wherein is provided a spray-type hand pump mounted within a container for the liquid through use of the closure cap of such container".

Of the four claims on which the Patent Office granted the patent, we are concerned only with Claims 1 and 2.[1]

The object of the patent is to eliminate the old outside attached sprayer and supplant it with a sprayer enclosed in the container in such a fashion that the sprayer head will be depressed, protected, and sealed in order that the product would lend itself to transportation and handling

---

[1] Claim 1. "In a closure assembly for an open-top container having a perforated cap over said open top thereof mounting a spray unit including a barrel provided with a tubular extension passing coaxially upwardly through the perforation in said cap, a plunger reciprocally carried by the barrel and normally extending therebeyond and a spray head on the upper end of the plunger above said extension, the combination with said spray unit of an annular retainer telescoped over and secured to the extension above said cap and provided with external, circumferentially disposed screw threads and an annular, continuous segment at the upper part of the retainer above said screw threads, and a cup-shaped hold-down member housing the head and holding the plunger depressed at substantially the innermost path of travel thereof within the barrel, said member being provided with internal screw threads complementally engaging said screw threads on the retainer and having an internal, circumferentially extending, continuous shoulder disposed to engage said segment around the entire periphery thereof and thereby present a liquid-tight seal located between the spray head and said threads on the retainer and said member respectively, said shoulder being spaced from the lower annular peripheral edge of the member a distance at least slightly less than the distance from the portion of said segment normally engaged by said shoulder, to the proximal upper surface of the cap whereby said lower edge of the member is maintained out of contacting relationship with the cap when the member is on the retainer in a position with said shoulder in tight sealing engagement with the segment."

Claim 2. "A closure assembly as set forth in claim 1 wherein one of the normally interengaged surfaces of the shoulder and segment respectively is substantially conical to present an inclined annular face coaxial with the member and said retainer and of sufficient diameter at the largest end thereof to cause the seal effected between the shoulder and said segment to become tighter as the shoulder slides on said segment during shifting of the member toward the cap."

without breakage or leakage. Claim 1 described a completely integrated device which assertedly accomplished this purpose by the assemblage of corresponding internal threads in the over-cap which screw onto corresponding external threads of the sprayer head's collar with an allowance for a space between the lower edge of the over-cap and the container cap to insure a torqued fit. The over-cap, while holding the sprayer head depressed, also provides for a seal resulting from a raised annular rib around the top of the collar engaging the periphery of three surfaces formed by a downwardly facing shoulder on the underside of the over-cap above the threads. An expert testifying on behalf of appellee described the device's novel contribution to the industry as:

> "The first commercially successful, inexpensive integrated shipping closure pump unit which permitted automated assembly with a container of household insecticide or similar liquids to produce a practical, ready-to-use package which could be shipped without external leakage and which was so organized that the pump unit with its hold-down cap could be itself assembled and sealed and then later assembled and sealed on the container without breaking the first seal."

*Validity of the Patent.* The statute provides that a patent shall be presumed valid and the burden of establishing invalidity rests on the party asserting it. 35 U.S.C.A. § 282. The issue of patentability of a new combination of old elements to form invention must, however, be approached keeping in mind the more exacting standard long required by the Supreme Court. In *Selmix Dispensers, Inc.* v. *Multiplex Faucet Co., Inc.*, 277 F.2d 884 (8th Cir. 1960), we recognized the Supreme Court's admonition in *Great Atlantic and Pacific Tea Co.* v. *Super-Market Equipment Corp.*, 340 U.S. 147, 152 (1950) that "The conjunction or concert of known elements must contribute something; only when the whole in some way ex-

ceeds the sum of its parts is the accumulation of old devices patentable." See also *Cuno Engineering Corp.* v. *Automatic Devices Corp.*, 314 U.S. 84, 90 (1941); *Lincoln Engineering Co.* v. *Stewart-Warner Corp.*, 303 U.S. 545, 549 (1938); *Caldwell* v. *Kirk Mfg. Co.*, 269 F.2d 506 (8th Cir. 1959), cert. denied 361 U.S. 915 (1959); *Briggs & Stratton Corp.* v. *Clinton Machine Co., Inc.*, 247 F.2d 397 (8th Cir. 1957), cert. denied 355 U.S. 914 (1958).

Factual comparison of the individual elements of the Cook-Bakan 2 sprayer unit with prior art would permit a finding that its components are not novel per se—threaded over-cap depressing sprayer head (Lohse Pat. No. 2,119,884); complementary threaded collar (Lohse Pat. No. 2,119,884; Darley Pat. No. 1,447,712); space tolerance between over-cap and container cap (Slade Pat. No. 2,844,290; Livingston Pat. No. 2,715,480); and shoulder-rib seal at zone beneath sprayer head and above threads (Mellon Pat. No. 2,586,687). However, there is nothing in the prior art suggesting Scoggin's unique combination of these old features in such an assemblage as would solve the production, shipping, and operation problems which for years beset the insecticide industry as well as producers of other low viscous liquids. The patentee's "closure assembly" eliminated the costly and time consuming steps in production requiring attachment of the sprayer holder to the outside of the container and insertion of the sprayer, while at the same time providing a protected, sealed sprayer unit which need only be screwed onto the top of the insecticide container like a metal cap, not to be disturbed until removal of the over-cap and application by the ultimate consumer. This novel "marriage" of the sprayer with the insecticide container which took years in the discovery is neither taught by, nor readily discernible from the application of mechanical skill to the elements of the prior art.

Not only did the device produce new and useful results in the more efficient and economical bottling of low viscous liquids while simultaneously eliminating breakage and leak-

age during its shipment and storage, but it enjoyed immediate commercial success from the public. Cook used on its own products or sold to customers some fifteen million of the Cook-Bakan 2 sprayers receiving not over one hundred complaints which is negligible when dealing with an item packaged by mass production techniques. Evidence of commercial success in a doubtful case may turn the scale in favor of the patentee. *Long* v. *Arkansas Foundry Co.*, 247 F.2d 366, 369 (8th Cir. 1957). Instantaneous industry, as well as public acceptance of the device in issue confirms our belief invention was produced.

In short, the Cook-Bakan 2 meets the exacting standard required for a combination of old elements to rise to the level of patentable invention by fulfilling the long-felt need with an economical, efficient, utilitarian apparatus which achieved novel results and immediate commercial success. Unquestionably, the trial court's finding something new was created worthy of patent protection was proper.

*Infringement.* After the Cook-Bakan 2 was marketed, some of Calmar's larger customers solicited it to produce a leak-proof, integrated sprayer. At that time Calmar was distributing an uncovered, lock-down bayonet slot type sprayer, the S-25-LP, which proved so unsatisfactory in retaining products of the liquidity of insecticides that one of Calmar's officials discouraged promotion of the item by its sales force. Calmar also experimented with a polyethylene boot, resembling an elongated balloon, which was inserted in the container and covered the lower extremity of the sprayer pump to prevent leakage. Colgate, a customer of Calmar, rejected this innovation and expressed preference for something similar to the Cook-Bakan 2 in appearance which would provide an internally leak-proof sprayer in addition to a shipping enclosure for the sprayer head. Calmar was notified by another customer that it had a Cook-Bakan 2 on test which had proven not to leak. During the fall of 1957 continued pressure from other customers beleaguering Calmar to produce a truly leak-proof

integrated sprayer prompted Calmar's president to employ engineer Douglas F. Corsette in December of 1957, assigning him the special mission of designing such a sprayer which would satisfy customer demands and recapture market initiative.

On September 9, 1958, subsequent to commercialization of the Cook-Bakan 2 in 1957, application was made for a patent on the accused device, Calmar SS-40. Production and distribution of the accused device immediately followed Calmar's grant of United States Patent No. 2,956,509 on October 18, 1960.

The challenged features of the alleged infringing Calmar SS-40, the combination of collar to cap seal with attendant hold-down of the sprayer head, are identical with respect to the sealing zone, principle, and purpose of the Cook-Bakan 2 and differs only in the shape or form of the sealing surfaces at the collar to cap engagement.[2] The trial court correctly described this uncontrolling difference in shape of the seal as the employment of a square shoulder-to-rib type seal on the Cook-Bakan 2 opposed to a tongue-and-groove or "labyrinth" seal on the accused device. The Cook-Bakan 2 provides for three contacting sealing surfaces, whereas the tongue-and-groove shape of the Calmar SS-40 provides for four contacting surfaces. The practical effect of the accused device was to perform substantially the same function in substantially the same manner to obtain the same result as the patent in issue. Exercising our appellate prerogative in a patent case to interpret the exhibits for ourselves, we are constrained to agree with the trial court's statement that "Upon close inspection of the devices, it is difficult to see how they could be much more similar and yet have any different features".

Appellants assert error on the part of the trial court in basing its conclusion of infringement on comparison of the

[2] The accused device also utilized "inner seals" in the pump mechanism uninvolved in this litigation.

devices rather than comparing the accused device with the claims of the patent in suit which they maintain bespeak dissimilarity. The record, however, affords specific evidence of the similarity of the accused device with elements described in Claims 1 and 2 of the Cook-Bakan 2 patent. Testifying at length concerning the elements and patent claims of both devices, a highly qualified expert witness for appellee stated that it was his opinion each and every one of the mechanical elements outlined in Claims 1 and 2 of the Cook-Bakan 2 finds a response in the structure of the accused Calmar SS-40 sprayer unit. The Supreme Court held in *Sanitary Refrigerator Co.* v. *Winters,* 280 U.S. 30 (1929) that generally one device is an infringement of another if it performs substantially the same function in substantially the same way to obtain the same result even though they differ in name, form, or shape. See also *Graver Tank Mfg. Co., Inc.* v. *Linde Air Products Co.,* 339 U.S. 605, 608 (1950); *Priebe & Sons Co.* v. *Hunt,* 188 F.2d 880, 883-84 (8th Cir. 1951), petition for cert. dismissed 342 U.S. 801 (1951). The accused device falls within this definition prohibiting substantial equivalence since its basic machanical elements, mode of operation, and results obtained find an identical counterpart described in the pertinent claims of the Cook-Bakan 2, the two devices varying only with respect to the inconsequential shape of the sealing surfaces.

The finding of infringement in the instant case based on the doctrine of substantial equivalence is a factual determination. *Graver Tank Mfg. Co., Inc.,* v. *Linde Air Products Co., supra* at 609; *Maytag Co.* v. *Murray Corp. of America,* 318 F.2d 79, 83 (6th Cir. 1963). Substantial evidence supports the trial court's finding of infringement.

The judgment of the District Court is in all things affirmed.

## APPENDIX C

### Judgment of the Court of Appeals

UNITED STATES COURT OF APPEALS
FOR THE EIGHTH CIRCUIT

September Term, 1963

No. 17,540

CALMAR, INCORPORATED, *Appellant,*

v.

COOK CHEMICAL COMPANY.

Appeal from the United States District Court
for the Western District of Missouri

and

No. 17,541

COLGATE-PALMOLIVE COMPANY, *Appellant,*

v.

COOK CHEMICAL COMPANY.

Appeal from the United States District Court
for the Western District of Missouri

These causes came on to be heard on the record from the United States District Court for the Western District of Missouri, and were argued by counsel.

On Consideration Whereof, It is now here Ordered and Adjudged by this Court that the judgment of the said District Court in these causes (District Court Nos. 12349-3 and 13006-3) be, and the same is hereby affirmed.

August 21, 1964.

## APPENDIX D

### Order Denying Petition for Rehearing En Banc

UNITED STATES COURT OF APPEALS
FOR THE EIGHTH CIRCUIT

September Term, 1964

No. 17,540

CALMAR, INCORPORATED, *Appellant,*

v.

COOK CHEMICAL COMPANY.

Appeal from the United States District Court
for the Western District of Missouri

No. 17,541

COLGATE-PALMOLIVE COMPANY, *Appellant,*

v.

COOK CHEMICAL COMPANY.

Appeal from the United States District Court
for the Western District of Missouri

There is before the Court appellants' petition for rehearing en banc and on consideration of such petition, It is the Order of the Court that the petition for rehearing en banc be, and it is hereby, denied.

October 9, 1964.

## APPENDIX E

### Opinion of the District Court

Filed June 19, 1963

IN THE UNITED STATES DISTRICT COURT FOR THE WESTERN DISTRICT OF MISSOURI WESTERN DIVISION

No. 12349-3

CALMAR, INCORPORATED, *Plaintiff*

v.

COOK CHEMICAL COMPANY, *Defendant*

No. 13006-3

COLGATE-PALMOLIVE COMPANY, *Plaintiff*

v.

COOK CHEMICAL COMPANY, *Defendant*

### Memorandum Opinion, Findings of Fact, and Conclusions of Law

This is a declaratory judgment action instituted by the plaintiff, Calmar, Incorporated, against the defendant Cook Chemical Company, asking this court to declare that U. S. Patent No. 2,870,943 issued to Baxter I. Scoggin, Jr., on January 27, 1959, and presently owned by defendant Cook Chemical Company is invalid and not infringed by plaintiffs.

A similar declaratory judgment action was brought by the plaintiff Colgate-Palmolive Company against defendant Cook Chemical Company asking for the same judicial determination relative to the Scoggin patent.

In its answers, defendant admitted the jurisdiction of this court, and the existence of a justiciable controversy. The defendant also counterclaimed in each action, seeking a declaration of validity of its patent and a finding of infringement by plaintiffs' commercial device.

In the Colgate-Cook case, the defendant's counterclaim also alleged unfair competition as well as infringement on the part of Colgate. The two actions were consolidated for trial on the issues of validity and infringement only. Trial of the unfair competition issue raised in Cook's counterclaim against Colgate was deferred pending a determination of the issues of validity and infringement.

The patent involves a pump spray device designed to be inserted into bottles or other containers for the dispensing of liquid contained therein. The particular device with which we are concerned here, is a screw cap designed to hold down the plunger of said spray pump when it is inserted in a bottle so as to prevent leakage and breakage while being shipped from processor, or while on the shelves of stores where such commodities are offered for sale.

The sprayers which were manufactured by Calmar and later by Bakan, were used by defendant prior to the Scoggin patent, was a simple device made of rigid plastic. It consisted of seven separate elements; (1) a chamber approximately 1¾″ long and ½″ in diameter; (2) a disk was sealed to the top of this element with an opening therein corresponding in size to the opening in the chamber. The lower end of the chamber was formed into a bottle neck design, and the opening at the end thereof was smaller than the opening in the top of the chamber.

Into this opening was inserted (3) a plastic barrel of sufficient length to extend to the bottom of the container. The disk at the top of the chamber was so designed and sized as to enable it to be secured to the inside of the threaded container cap of metal or plastic material. The container cap possessed an opening in the top surface to correspond to the opening in the disk and chamber itself.

(4) A collar smaller than the container cap with an opening therein corresponding in size to the openings in the chamber and disk and the container cap was secured to the

top of the container cap. This collar extended slightly above the container cap.

(5) A small coil spring was inserted into the chamber and rested upon the shoulder created in the sides of the opening near the lower end thereof.

(6) A plunger approximately 2" long was inserted into the chamber through the openings in the collar and the container cap to contact the coil spring therein. Upon the top of this plunger was secured the (7) sprayer head containing an orifice through which the fluid was expelled.

The top of the sprayer head was formed into a "saddle" to accommodate a finger or thumb of the hand. Thus assembled, the sprayer pump was inserted into the bottle and secured thereto by means of the threaded cap. When the plunger was actuated by being pressed downward by the finger or thumb, the fluid in the container was drawn through the barrel and chamber and forced through the orifice in the form of spray. When the sprayer was attached to the container, the plunger and sprayer head projected about 1½" above the top of the container.

Defendant Cook Chemical has been engaged in the manufacture and sale of household insecticides since 1945, and sold its product under the trade name, "Real Kill". Prior to 1954, the insecticide industry largely was made up of a number of small packages scattered throughout the country.

Plaintiff Colgate was in the market prior to 1958 with 6 and 12 ounce Aerosol cans, but did not enter the household insecticide market with a package including pump sprayer until 1958, when it came into the market with "Kan Kill" which immediately came into competition with defendant's product, "Real Kill".

Prior to the patented sprayer coming on the market in 1957, most of the manufacturers and distributors of household insecticide chemicals used the type sprayer which has

heretofore been described, and attached it to their bottles or containers by means of pasteboard or plastic holder. This was necesasry as the products could not be successfully handled with the sprayer in place, due not only to breakage but leakage in shipment and while the bottles were on the shelves of the merchants before sale.

With respect to insecticides, the evidence reveals that the chemicals used by the parties in the manufacture of these products caused the material to be extremely fluid and susceptible to leakage. Due to this, a much tighter seal was required for them than for starch, wave set, leaf polish and moth spray. The container when in shipment or displayed for sale had a separate cap which was removed by the purchaser who then inserted the sprayer.

This practice had also presented problems of breakage and handling to the manufacturers and merchandisers as the sprayers were occasionally damaged or lost. This condition continued to plague the manufacturers of the sprayer and sellers of insecticides particularly, during all of the period prior to the Scoggin invention.

Defendant purchased sprayers for its products from plaintiff and some time prior to 1956, had urged upon Calmar the desirability of making a shipping sprayer that could be put in place before shipment. As early as 1951-'52 Calmar made what has been referred to in the evidence as its SS 25 LP, the head of which, when depressed and turned, would lock into the collar attached to the container cap.

It did not prove to be satisfactory, and did not get far beyond the experimental stage. It leaked down the stem and did not solve the breakage problem. (Deft. Ex. 26). During this period plaintiffs had expended considerable time, effort and money in an attempt to develop a successful shipper-sprayer, but had not met with any substantial success.

In 1956 the defendant organized a company known as "Bakan" and began the manufacture of its own sprayers. Sprayers were not a patented device, and defendant's sprayer did not differ from the Calmar sprayer.

Between the time the defendant began to manufacture its own sprayers in 1956, and March 4, 1957, the patentee, B. I. Scoggin, Jr., devoted his time trying to find a solution to the problem of leakage and breakage. His efforts finally culminated in the patent that is now in dispute. The application therefor was filed on the above date. It was a simple device, but apparently solved the problem of breakage in shipping and leakage.

In his patent Scoggin utilized the Bakan sprayers which were currently being manufactured by it. The only structural change made in the sprayer was to redesign the collar attached to the container cap so as to form the lower portion of the inner seal and to provide threads around the collar to conform to the threads in the hold-down cap. By securing the hold-down cap to the collar the sprayer head was caused to be depressed and covered, and thus shielded from breakage. An inner seal was also formed between the hold-down cap and the collar which prevented leakage.

In his specifications, patentee described his invention as follows:

> "Pump-Type Liquid sprayer having hold-down cap."
>
> "Designation of Patent"
>
> "This invention relates to improvements in structures for dispensing liquids wherein is provided a spray-type hand pump mounted within a container for the liquid through use of the closure cap of such container.
>
> It is common practice, as exemplified for example by Patent No. 2,362,080, issued November 7, 1944, to

dispense various types of liquids such as insecticides, through use of a finger manipulated spray pump normally sold as a component part of the container itself. The pump includes a vertically reciprocable plunger extending upwardly beyond the top of the cap within which the pump is mounted and provided with a spray head or nozzle structure capable of emitting a fine mist-like spray when the plunger is depressed by engagement with a finger receiving saddle forming a part of the spray head.

Difficulties have been experienced in the field by virtue of the inherent nature of such structure since accidental actuation of the plunger causes dispensing of the fluid and oftentimes the material is used in part by store employees prior to sale because of the ready accessibility to the pump itself.

It is the most important object of the present invention, therefore, to provide structure for rendering the pump inoperable during shipment and while in storage, as well as on the shelves of the retail dealer.

Another important object of the present invention is to provide structure capable of carrying out the functions above set forth which is also adapted to enclose the head of the plunger and thereby protect the same, as well as handlers of the merchandise by virtue of the fact that the said plunger is completely enclosed and held at the innermost end of its reciprocable path of travel."

The Patentee claimed for his patent in Claims 1 and 2:

"1. In a closure assembly for an open-top container having a perforated cap over said open top thereof mounting a spray unit including a barrel provided with a tubular extension passing coaxially upwardly through the perforation in said cap, a plunger reciprocably carried by the barrel and normaly extend-

ing therebeyond and a spray head on the upper end of the plunger above said extension, the combination with said spray unit of an annular retainer telescoped over and secured to the extension above said cap and provided with external, circumferentially disposed screw threads and an annular, continuous segment at the upper part of the retainer above said screw threads, and a cup-shaped hold-down member housing the head and holding the plunger depressed at substantially the innermost path of travel thereof within the barrel, said member being provided with internal screw threads complementally engaging said screw threads on the retainer and having an internal, circumferentially extending, continuous shoulder disposed to engage said segment around the entire periphery thereof and thereby present a liquid-tight seal located between the spray head and said threads on the retainer and said member respectively, said shoulder being spaced from the lower annular peripheral edge of the member a distance at least slightly less than the distance from that portion of said segment normally engaged by said shoulder, to the proximal upper surface of the cap whereby said lower edge of the member is maintained out of contacting relationship with the cap when the member is on the retainer in a position with said shoulder in tight sealing engagement with the segment.

2. A closure assembly as set forth in claim 1 wherein one of the normally interengaged surfaces of the shoulder and segment respectively is substantially conical to present an inclined annular face coaxial with the member and said retainer and of sufficient diameter at the largest end thereof to cause the seal effected between the shoulder and said segment to become tighter as the shoulder slides on said segment during shifting the member toward the cap."

The purpose of the Scoggin patent is that of converting the old side-mounted sprayer into a shipper sprayer. In order to achieve this end, two things had to be accomplished. First, the sprayer head and plunger had to be protected from damage. Second, the unit had to be sealed to prevent leakage of the contents. To achieve this the collar on the top of the container cap was modified and the hold-down cap was added.

To the existing collar two new elements were added. First, screw threads were added to the side so that they would engage those on the inside of the hold-down cap. Secondly, a circular rib or lip around the top of the collar was added to establish a seal with a complementary lip inside the hold-down cap.

The hold-down cap included, first, internal screw threads which would engage those added to the side of the collar, and secondly, a circular inner shoulder which would engage the rib or lip added to the top of the collar. Finally, the cap was constructed so that when screwed into place on the collar it would depress the sprayer, completely enclosing it, providing the required protection. A space is provided between the lower surface of the hold-down cap and the container cap so that there is no contact between such surfaces.

The rib on the collar and the shoulder in the cap provide the seal. The threads on the side of the collar and those inside the cap serve to secure the cap to the collar, thus enclosing, depressing and protecting the sprayer. With the cover cap secured to the collar, any forces applied to the cap would be transmitted to the collar and not to the sprayer head and the plunger.

Defendant's patent is limited to the combination of the old sprayer with these modification and additions.

The file wrapper reveals that numerous claims were filed, denied, cancelled and amended before Claims 1 and 2, among others, were finally allowed.

The defendant began to manufacture sprayers embodying its invention in 1956, and at first it encountered some difficulty with leakage at the seal. Some modifications were made in the structure, and the evidence clearly and unequivocally reveals that thereafter the problems, both of leakage and breakage were solved. It immediately enjoyed trade and customer acceptance and its commercial success was assured. The defendant's product with sprayer inside of the container was then for the first time marketed as an integrated unit.

The hold-down cap on defendant's sprayer was screwed to the collar by the assembling machinery at the time of manufacture. This depressed the spray head and established the seal. When the products were bottled the sprayer was inserted and screwed down onto the top of the container. The merchandise was then ready for shipment. In following this procedure the seal formed by the collar and cap were unbroken between the time of final assembly of the sprayer and the first use by the ultimate customer.

Thus Bakan had produced a sealed and protected sprayer unit which the manufacturer need only screw onto the top of its container in much the same fashion as a simple metal cap.

Plaintiff's contention is that defendant's claims lack invention, and that every element of the claims in suit is disclosed in the prior art, and that every combination or subcombination recited in the claims can be found in the prior art. Plaintiffs also deny that either Calmar's patent or the accused device infringes.

§ 103 Title 35 U. S. C. A. provides:

> "A patent may not be obtained though the invention is not identically disclosed or described as set forth in section 102 of this title, if the differences between the subject matter sought to be patented and the prior

art are such that the subject matter as a whole would have been obvious at the time the invention was made to a person having ordinary skill in the art to which said subject matter pertains. Patentability shall not be negatived by the manner in which the invention was made."

Therefore, the question is—was the combination of the admittedly old and known elements employed by Scoggin in accomplishing the result which he set out to achieve, invention, or was it merely the result of mechanical skill?

At first glance the mere simplicity of the idea would seem to present a very close question, but it must be remembered that we are dealing with a situation that had long given trouble to those who were engaged in that business, and who were familiar with the problem and art.

The manufacturers of sprayers had not been able to solve the problem of leakage and breakage in the shipment of the products with which their spray pumps were used. Numerous ideas had been suggested by Calmar, the experiments were made, but none of them solved the problem. These facts and circumstances certainly must lead us to seriously doubt that it was so simple a mechanical problem as it seems now that it has been solved. However, simplicity and obviousness after the event do not negative invention. *Goodyear Co.*, v. *Ray-O-Vac Co.*, 321 U. S. 275 and cases cited in note 4 p. 279.

Now that it has been solved, one trained in mechanics and in the art might say, "Well, that was a very simple problem and should easily have been solved", but the fact that many people were thinking about and working on it, and were unable to come up with the answer, raises it above the principle of mere simplicity. Hindsight is generally 20-20.

When the application was before the Patent Office, there were five patents cited, including Lohse, June 7, 1938, No.

2,119,884. Plaintiffs have cited two others that were not before the examiner.

Certainly there is nothing new about the use of hold-down caps on bottles. The Lohse patent which employed a hold-down cap, was dated in 1938, but the evidence reveals that it was not commercial at that time, has not been in use for many years. Lohse's cap would not solve the problem that was faced by the manufacturers and sellers of insecticides.

It is true that Lohse's cap contained threads therein which corresponded to threads on a collar above the container cap, just as there are threads on the collar of the sprayer with which we are concerned here. But, the bottom or the skirt of the cap in Lohse forms a seal with a gasket of some substance, apparently leather, which rests on the upper surface of the container cap. There are no seals above the threads and below the sprayer head. This form of contact between the end of the hold-down cap and the top of the container would not solve the problem of leakage.

There is no thought or contention in this case about there being anything novel or new about the hold-down cap or the threads therein corresponding to the threads on the collar. In defendant's teachings and in its claim it is provided that:

> "* * * *said shoulder being spaced from the lower annular peripheral edge of the member a distance at least slightly less than the distance from that portion* of said segment normally engaged by said shoulder, to the proximal upper surface of the cap whereby said *lower edge of the member is maintained out of contacting relationship with the cap when the member is on the retainer in a position with said shoulder in tight sealing engagement with the segment.*" (Emphasis supplied)

Much has been said by the plaintiffs about this language in the claim and they insist that such a space is not invention. In simple language, all that is meant by this rather complicated language is that there is a space between the lower edge of the hold-down cap and the container cap in order to permit the hold-down cap to be screwed down on the collar and form a solid seal between the inner shoulder of the collar and the inner groove of the cap. Certainly without a space so described, there could be no inner seal within the cap, but such a space is not new or novel, but it is necessary to the formation of the seal within the hold-down cap.

To me this language is descriptive of an element of the patent but not a part of the invention. It is too simple, really, to require much discussion. In this device the hold-down cap was intended to perform two functions—to hold down the sprayer head and to form a solid tight seal between the shoulder and the collar below. In assembling the element is necessary to provide this space in order to form the seal.

A patent shall be presumed valid. The burden of establishing invalidity of a patent shall rest on a party asserting it. 35 U. S. C. A. § 282. The Supreme Court applied this statutory rule in *Mumm* v. *Decker & Sons,* 301 U. S. 168, where it said:

> " 'For the grant of letters patent is *prima facie* evidence that the patentee is the first inventor of the device described in the letters patent and of its novelty. Smith v. Goodyear Dental Vulcanite Co., 93 U.S. 486; Lehnbeuter v. Holthaus, 105 U.S. 94'. The issue of the patent is enough to show, until the contrary appears, that all the conditions under which a discovery is patentable in accordance with the statutes have been met. Hence, the burden of proving want of novelty is upon him who avers it. Walker on Patents, § 116. Not only is the burden to make good this defense upon the party

setting it up, but his burden is a heavy one, as it has been held that 'every reasonable doubt should be resolved against him.' Id., Cantrell v. Wallick, supra; Coffin v.: Ogden, 18 Wall 120, 124; Barbed Wire Patent, 143 U.S. 275, 284, 285; Adamson v. Gilliland, 242 U.S. 350, 353." (171)

In *Ezee Stone Cutter Mfg. Co.*, v. *Southwest Indus. Prod.*, 262 F. 2d 183 (C.A. 8, 1958), our own Eighth Circuit Court of Appeals quoted *Long* v. *Arkansas Foundry Co.*, 247 F. 2d 366, 369, (C.A. 8, 1957):

" 'The issuance of a patent is prima facie evidence of both novelty and utility (see 35 U.S.C.A .§ 282), and when one attacks a patent he must make good his attack with reasonable clearness. He has the burden of proof, and every reasonable doubt will be resolved against him. Doner v. Sheer Pharmacal Corporation, 8 Cir., 1933, 64 F. 2d 217, 221, and cases cited; G. H. Packwood Mfg. Co. v. St. Louis Janitor Supply Co., 8 Cir., 1941, 115 F. 2d 958, 964, 965.

In a case where the patentability of a claimed invention is in issue, evidence of commercial success is admissible and may be forthcoming. In a doubtful case, such evidence may turn the scale in favor of the plaintiff. See Donner v. Sheer Pharmacal Corporation, supra, at page 221 of 64 F. 2d, and cases cited.

In such a case, evidence that the patent device or combination solved a long-felt want and an old problem which had baffled those skilled in the art is also admissible. [Citing cases]' "

As heretofore stated, defendant's patented device met with substantial and extensive commercial success. This is evidenced by the fact that Calmar almost immediately set out to produce an equally successful shipper-sprayer. Commercial success or acceptance is an element that may

be taken into consideration in determining the question of invention, but is not necessarily determinative of the issue. *Temco Elec. Motor Co.*, v. *Apeco Mfg. Co.*, 275 U.S. 319; *Forestek Plating & Mfg. C.*, v. *Knapp-Monarch Co.*, 106 F. 2d 554 (C.A. 6, 1939); *Ezee Stone Cutter Mfg. Co.*, v. *Southwest Indus. Prod. supra.*

Another question for determination here is whether or not defendant's invention solved the problem of leakage or breakage in shipment. Unquestionably it did. That is best exemplified by the fact that the plaintiffs adopted and used a device with a seal within the cap almost exactly like that used by the defendant. Thus it meets one of the requirements necessary to an invention, it was useful.

Was it new? The fact that a patent may be composed of old and well known elements, if it performs a new and useful purpose does not destroy invention. *Parks* v. *Booth*, 102 U.S. 96; *Loom Co.* v. *Higgins*, 105 U.S. 580. As a matter of fact, most of the mechanical patents that come to our attention now are a combination of old and well known elements into new form or composition.

Although hold-down caps had been used for many years, their use on the sprayer was for a special and limited purpose. It was employed in a narrow art, one pertaining primarily to the sealing, shipping and use of insecticides by means of liquifying sprayers.

Several years of study and experimentations had been spent in an attempt to solve this problem; designs had been submitted to the manufacturers and sellers of insecticides. None had been satisfactory. May it not then be said that the design of a sealing element or joint that solved the problem, although it was simple, would be new? Certainly it was new in the art which the problem presented.

By the same reasoning, may it not also be said that if it solved a long-sought need, it was likewise novel? If it meets the requirements of being new, novel and useful, it

was the subject of invention, although it may have been a short step, nevertheless it was the last step that ended the journey. The last step is the one that wins and he who takes it when others could not, is entitled to patent protection. *The Barbed Wire Patent,* 143 U.S. 275.

It is my conclusion that the defendant's patent is valid.

Following the introduction into the market of its Bakan 2 sprayer pump, the pressure upon Calmar from its customers to produce a better shipper pump than it had theretofore been able to supply, became acute. Calmar's president testified that either he or some member of his organization had seen the Bakan 2 sprayer when it came upon the market in the fall of 1957.

In the early part of 1958, Calmar employed Douglas F. Corsette, who, at the time he testified in this case, was vice-president in charge of engineering and development for Calmar. He had Bachelor and Masters degrees in engineering from Purdue University. Immediately prior to the time he was employed by Calmar, he had been in the employ of a company engaged in the construction of an automatic assembly machine for sprayer devices.

In the early part of 1958, he was given the special assignment of designing a sprayer that would meet Calmar's customer requirements. These requirements apparently specified something comparable to that which had been produced by Bakan.

As a result of their study and experiments, Douglas F. Corsette and Rex C. Cooprider produced the accused device and filed an application for a patent on September 9, 1958, which was granted October 18, 1960. While the validity of the Corsette-Cooprider patent is not in issue here, I think for the purpose of understanding plaintiffs' commercial device, it may be well to describe it.

The patent was assigned by Corsette and Cooprider to the Drackett Company of Cincinnati, Ohio. The Drackett

Company acquired Calmar, Inc., and Calmar Company was thereafter organized as the sales agency for Drackett Company. The question of the identity and relationship of the respective companies was settled before trial by stipulation of the parties.

The application is entitled, "Fluid Dispensing Pumps" and it stated:

> "This invention relates to new and improved fluid dispensing pumps of the class in which the pump plunger is immobilized in a predetermined position for packing and shipping purposes to avoid inadvertent actuation and discharge of the liquid contents of a container to which such a pump may be applied.
>
> In liquid dispensing pumps adapted for application to and sale with containers for various commercially dispensed liquids, it has been heretofore known, as exemplified by the Lohse U. S. Patent 2,119,884, to utilize a protective cover for immobilizing the pump plunger in a predetermined depressed condition and also for trapping and retaining any liquid that may be inadvertently discharged from the pump. * * * * * It has been found, however, that in practice a very appreciable amount of liquid may be discharged into such a protective cap due to inversion of the container and/or expansion of its contents. In such case, the liquid may escape either through the usual liquid discharge passage of the plunger and the plunger head, or between the plunger and the barrel in which it works.
>
> (* * * * * this is the same patent which was referred to in Scoggin).
>
> It is, accordingly, a primary object of the present invention to provide an improved form of fluid dispensing pump having means for retaining the plunger in immobilized position and including additional means rendered operative by immobilization of the plunger

for closing off the plunger discharge passage and at the same time providing a fluid seal or block preventing egress of the liquid between the pump plunger and its associated barrel.

The preferred means for retaining the plunger thus immobilized is a protective hold-down cap which is threaded or otherwise secured to the container over the plunger head to depress the plunger to its immobilized position against spring pressure.

The invention further contemplates that the discharge opening or orifice of the plunger head will be surrounded by a frusto-conical sealing surface for cooperation with a similar frusto-conical interior surface of the protective cap whereby to prevent discharge of fluid from the plunger head into the cap incident to application of the cap and depression of the plunger to its immobilized position, as well as subsequent thereto."

(This designated frusto-conical sealing surface or cap is the same cap that is referred to in Calmar's SS 25 and 40).

The description of plaintiff's patented device is quite lengthy and requires 5½ pages of soft copy.

Calmar's specifications then proceeded to describe the sprayer pump and certain improvements made thereto for the purpose of preventing the fluid from escaping into the cap when the plunger or head of the sprayer head is depressed. With that particular description I am not concerned, because it is not that element of plaintiffs' commercial device which is alleged infringed. The description of this element of plaintiffs' patented device is designated as a "Primary Seal", whereas that portion of plaintiffs' device with which we are concerned, is contained within the hold-down cap and collar.

There is also fully described in plaintiffs' specifications what we have been referring to as the seal between the threads on the collar attached to the container cap and the top of the hold-down cap. The specifications are spelled out in great detail. Significant of this language, I quote the following:

> "In order to effect a liquid tight sealing engagement between the cap and the collar, the collar is formed with an upwardly presented groove inwardly of its threaded outer wall for reception of a depending annular sealing ring on the cap. The dimensions of the groove and sealing ring are so related that the sealing ring preferably makes a jamming fit into the groove.
>
> It is preferred that the cap be of resilient material in order that its conical interior sealing surface may form a fluid tight sealing engagement with the conical peripheral surface of the spray head and also so that its sealing ring may form a yielding fluid tight fit within the groove. Where the cap is thus formed of resilient plastic, however, it is subject to the usual and known difficulty that excessive tightening of the cap, as by automatic capping mechanism, may tend to expand the lower edge of the cap skirt so that the threads of the cap will override and become disengaged from the threads on the collar. However, the depending ring or skirt in addition to performing its sealing function, will resist such expansion tendency and thus adapt the resilient material caps for efficient application by automatic capping mechanism."

There are twenty claims in Calmar's invention. Its Claim 11 is particularly significant:

> "In a fluid dispensing pump, the combination with a generally vertical cylindrical pump barrel having at its upper end a collar having threads thereon, of a plunger reciprocally disposed in said barrel and having

at its upper end and above said collar a discharge head having a discharge orifice for fluid, spring means acting between said barrel and plunger for urging said plunger upwardly in said barrel, a check valve associated with said barrel to prevent downward movement of fluid therein, said plunger being forced to provide a discharge passage extending therethrough and communicating with said discharge orifice, a protective cap dimensioned to embrace said discharge head, said cap having a skirt for engagement with the threads on said collar to hold said plunger in a depressed and immobilized position against the action of said spring means, coacting sealing surfaces on said plunger and collar, said sealing surfaces being engaged when said cap is threaded on said collar to seal said barrel to prevent leakage externally of said plunger, means operable when said plunger is depressed and immobilized to seal said discharge passage to prevent leakage internally of said plunger, said last named means comprising a sealing ring surrounding said discharge orifice and having a contour conforming with the contour of the interior surface of said cap and positioned for sealing engagement with said cap in the depressed and immobilized position of said plunger, and coacting sealing surfaces on said cap and collar to contain within said cap liquid escaping from a defective seal either externally or internally of said plunger."

Stripped of the technical language, if I correctly understand the teaching of the Calmar patent, it simply means it has made some improvements in its old basic sprayer by providing seals within the structure of the sprayer thus preventing the escape of fluid when it is in a depressed position.

The accused device is the Calmar SS-40. It conforms in almost all respects to the Corsette-Cooprider patent. As I have said, it contains modifications of the basic sprayer

in addition to the hold-down cap and collar elements which are alleged to infringe defendant's patent. These modifications are not in issue here, and it is only the problem solving combination of the collar to cap seal and the hold-down cap that is alleged to infringe.

Specifically, the Calmar seal is formed by a circumferential groove in the top of the collar secured to the container cap and a tongue or projection formed in the hold-down cap to conform to the groove in the collar, so that when the hold-down cap is screwed down on the collar, the upper tongue is pressed into the lower groove, thus forming a seal. This, in plaintiffs' evidence, is designated a "secondary" seal; also as a "labyrinth" seal, and differs from Scoggin's, which described a square shoulder which comes in contact with the projection or tongue circumferentially formed around the collar.

In the Scoggin patent it may be said that there are three contacting surfaces formed by a union of the above shoulder and the below projecting tongue, whereas in the plaintiffs' accused device, there seems to be four contacting surfaces that are comparable to ordinary tongue-and-groove hardwood flooring.

We may assume, as an ordinary principle of mechanics, that if tongue and grooved objects are precisely scaled, when they are put together, they will form a perfectly tight union; the tongue and groove conforming exactly to each other's dimensions and the outer portions of the groove being perfectly dimensioned to the outer edges or portions of the tongue will likewise form a perfect union, and all coming in contact without any space in any area.

That is not true, I believe with either defendant's patent or plaintiffs' accused device. This may be attributed to manufacturing imperfections and to the type of material used, as it is pliable and subject to distortion under pressure.

This characteristic of the material is, to a great degree, responsible for the establishment of the seal.

So far as outward appearances are concerned, plaintiffs' accused device and defendant's patented device are identical, and it is necessary to make a close inspection of the inner portions of the hold-down caps to determine the precise form of the seals.

Structurally, the only significant difference between the collars and hold-down caps of defendant's patent and plaintiffs' accused device is the provision for the shoulder and tongue on defendant's, and the labyrinth on plaintiffs.

Infringement is a question of fact. *Stilz* v. *U.S.*, 269 U.S. 144, *Graver Tank and Mfg. Co. et al,* v. *Linde Air Products Co.*, 339 U.S. 605. The burden of proof is on the party alleging infringement. *Cammeyer* v. *Newton*, 94 U.S. 225, *Bene* v. *Jeantet*, 129 U.S. 683. The test of infringement was set out by the Supreme Court in *Sanitary Refrigeration Co.* v. *Winters*, 280 U.S. 30, at 41-42 where it said:

> "There is substantial identity constituting infringement, where a device is a copy of the thing described by the patentee 'either without variation, or with such variations as are consistent with its being the same thing' *Burr* v. *Duryee*, 1 Wall 531, 537. * * * * * Generally speaking, one device is an infringement of another 'if it performs substantially the same function in substantially the same way to obtain the same result.' . . . Authorities concur that the substantial equivalent of a thing, in the sense of the patent law, is the same as the thing itself; so that if two devices do the same work in substantially the same way and accomplish substantially the same result, they are the same even though they differ in name, form or shape.' "

Plaintiffs' commercial device, insofar as the sealing in the hold-down cap and the protection of the sprayer head

are concerned, perform the same function in substantially the same manner performed by defendant's.

Upon a close inspection of the devices, it is difficult to see how they could be much more similar and yet have any different features.

IT IS THEREFORE my conclusion that plaintiffs' commercial device infringes Claims 1 and 2 of defendant's patent.

R. M. DUNCAN
Richard M. Duncan
Judge

Dated: June 19, 1963

FILE COPY

Office-Supreme Court, U.S.
FILED
JAN 6 1965
JOHN F. DAVIS, CLERK

IN THE

# SUPREME COURT OF THE UNITED STATES

OCTOBER TERM, 1964.

No. [redacted] 43

COLGATE-PALMOLIVE COMPANY,
*Petitioner,*

vs.

COOK CHEMICAL COMPANY,
*Respondent.*

## PETITION FOR A WRIT OF CERTIORARI TO THE UNITED STATES COURT OF APPEALS FOR THE EIGHTH CIRCUIT

GEORGE H. MORTIMER,
300 Park Avenue,
New York, New York 10022,
HOWARD A. CRAWFORD,
JACK W. R. HEADLEY,
15 West Tenth Street,
Kansas City, Missouri 64105,
*Attorneys for Petitioner.*

Of Counsel:

LATHROP, RIGHTER, GORDON & PARKER,
15 West Tenth Street,
Kansas City, Missouri 64105.

E. L. MENDENHALL, INC., 1108 Oak Street, Kansas City, Mo. 64106, HArrison 1-3030

IN THE

# SUPREME COURT OF THE UNITED STATES

OCTOBER TERM, 1964.

No.

COLGATE-PALMOLIVE COMPANY,
*Petitioner,*

vs.

COOK CHEMICAL COMPANY,
*Respondent.*

## PETITION FOR A WRIT OF CERTIORARI TO THE UNITED STATES COURT OF APPEALS FOR THE EIGHTH CIRCUIT

Petitioner, Colgate-Palmolive Company, prays that a Writ of Certiorari issue to review the judgment of the United States Court of Appeals for the Eighth Circuit in the above-entitled case.

## OPINIONS BELOW

The opinion of the Court of Appeals is reported at 336 F.2d 110. The opinion of the District Court for the Western District of Missouri is reported at 220 F. Supp. 414.

## JURISDICTION

The judgment of the Court of Appeals was entered on August 21, 1964. A timely Petition for Rehearing En Banc was denied on October 9, 1964. The jurisdiction of this Court is invoked pursuant to 28 U.S.C., Sec. 1254(1). The basis of jurisdiction in the District Court was 28 U.S.C., Secs. 1338(a) and 2201.

## STATEMENT

There is now before this Court a Petition filed on December 22, 1964, under No. 778 by Calmar, Inc., for a Writ of Certiorari to the same Court to review the same judgment. The two actions, Calmar, Inc., v. Cook Chemical Company and Colgate-Palmolive Company v. Cook Chemical Company, were consolidated for trial in the District Court for the Western District of Missouri (see page 15 of the printed Record prepared for the Court of Appeals and filed with this Court in Calmar, Inc., v. Cook Chemical Company) and the District Court entered one judgment against both plaintiffs (R. 36, filed with this Court in Calmar, Inc., v. Cook Chemical Company). The two actions were consolidated on appeal to the Court of Appeals for the Eighth Circuit which handed down a single opinion and entered one judgment affirming the judgment of the District Court. (Appendix C, page 12a of the Petition for a Writ of Certiorari filed by Calmar, Inc.)

The device found by the Court of Appeals to infringe Respondent's patent is a pump-type liquid sprayer with hold-down cap which is produced by Calmar, Inc., and which was sold by it to Colgate-Palmolive Company and used and resold by Colgate. Thus the device forming the basis of Respondent's counterclaim for infringement against Calmar, Inc., and the device forming the basis of Respondent's counterclaim against Colgate are one and the same.

The questions presented for review, the constitutional provision and statutes involved, the facts and the reasons for granting the writ are the same in this case as in Calmar, Inc., v. Cook Chemical Company.

While Colgate-Palmolive Company has been represented by its own counsel in the District Court and in the Court of Appeals, it has relied upon the presentations made by Calmar, Inc's. counsel, has adopted as its own the evidence adduced at the trial by Calmar, Inc., and has joined in or adopted as its own the notice of appeal, briefs and motions filed with the Court of Appeals by Calmar, Inc. It would only unduly burden this Court for the petitioner to repeat the petition of Calmar, Inc., heretofore filed.

Therefore, this petitioner adopts and incorporates herein by reference the statement of the questions presented for review, the constitutional provision and statutes involved, the facts and the reasons for granting the writ set out in the Petition of Calmar, Inc., for a Writ of Certiorari heretofore filed under No. 778, together with appendices attached thereto and, for the reasons therein stated, submits that this Petition for a Writ of Certiorari should be granted.

Respectfully submitted,

GEORGE H. MORTIMER,
300 Park Avenue,
New York, New York 10022,
HOWARD A. CRAWFORD,
JACK W. R. HEADLEY,
15 West Tenth Street,
Kansas City, Missouri 64105,
*Attorneys for Petitioner.*

Of Counsel:

LATHROP, RIGHTER, GORDON & PARKER,
15 West Tenth Street,
Kansas City, Missouri 64105.

COPY

Office-Supreme Court
FILED
JAN 22 196
JOHN F. DAVIS, CL

IN THE

# SUPREME COURT OF THE UNITED STATES

OCTOBER TERM, 1964

---

## No. [redacted] 37

CALMAR, INC.,
*Petitioner,*

vs.

COOK CHEMICAL COMPANY,
*Respondent.*

---

## No. [redacted] 43

COLGATE-PALMOLIVE COMPANY,
*Petitioner,*

vs.

COOK CHEMICAL COMPANY,
*Respondent.*

---

ON PETITIONS FOR WRITS OF CERTIORARI TO THE UNITED STATES COURT OF APPEALS FOR THE EIGHTH CIRCUIT

---

## BRIEF FOR RESPONDENT IN OPPOSITION

---

ROBERT D. HOVEY
1816 Federal Reserve Bank Building
Kansas City, Missouri 64106

VERNON B. KASSEBAUM
1500 Home Savings Building
Kansas City, Missouri 64106
*Attorneys for Respondent*

Of Counsel:

HOVEY, SCHMIDT, JOHNSON & HOVEY
WATSON, ESS, MARSHALL & ENGGAS

## INDEX


Opinions Below ..... 2
Jurisdiction ..... 2
Question Presented ..... 2
Constitutional Provisions, Statutes and Rules Involved 3
Statement ..... 3
Argument ..... 8

I. The Standard of Invention Employed by the Eighth Circuit Was Either Correct or Too Favorable to the Petitioners ..... 9

II. The Result Reached by Both Courts Below, Holding the Scoggin Patent Valid, Is an Entirely Proper One ..... 13

The Factor of Commercial Success ..... 18

Conclusion ..... 20
Appendix to Respondent's Brief ..... A1


### Table of Cases


*Crome & Company* v. *The Vendo Company*, 299 F.2d 852 (8th Cir. 1962) ..... 13

*Cuno Engineering Corp.* v. *Automatic Devices Corp.*, 314 U.S. 84, 90 (1941) ..... 10, 12, 20

*Diamond Rubber Co.* v. *Consolidated Rubber Tire Co.*, 220 U.S. 428, 441 (1911) ..... 7

*Ditto, Inc.* v. *Minnesota Mining & Mfg. Co.*, 336 F.2d 67, 69 (8th Cir. 1964) ..... 17

*Ezee Stone Cutter Mfg. Co.* v. *Southwest Industrial Products*, 262 F.2d 183 (8th Cir. 1958) ..... 16

*Graham* v. *Cockshutt Farm Equip., Inc.*, 256 F.2d 358 (5th Cir. 1958) ..... 12

*Great Atlantic and Pacific Tea Co.* v. *Super-Market Equipment Corp.*, 340 U.S. 147, 152 (1950) ..... 12, 20

*Jeoffroy Mfg., Inc.* v. *Graham*, 219 F.2d 511 (5th Cir. 1955), cert. den. 350 U.S. 826 (1955) ..... 12
*John Deere Company of Kansas City* v. *Graham*, 333 F.2d 529 (8th Cir. 1964) ..... 10, 11, 12, 20
*Lincoln Engineering Co. of Illinois* v. *Stewart-Warner Corp.*, 303 U.S. 545, 549 (1938) ..... 10
*Magnum Co.* v. *Coty*, 262 U.S. 159, 163 (1923) ..... 8
*Mumm* v. *Jacob E. Decker & Sons*, 301 U.S. 168 (1937) ..... 16, 17
*Selmix Dispensers, Inc.* v. *Multiplex Faucet Co., Inc.*, 277 F.2d 884 (8th Cir. 1960) ..... 10, 19
*Special Equipment Co.* v. *Coe*, 324 U.S. 370, 378 (1945) 17
*Temco Elec. Motor Co.* v. *Apco Mfg. Co.*, 275 U.S. 319 (1928) ..... 19

MISCELLANEOUS

"An Analysis of Patent Litigation Statistics", Staff Report, Subcommittee on Patents, Trademarks and Copyrights, Senate Judiciary Committee, 86th Cong., 2d Sess. (1961) ..... 13
Article I, Section 8, Clause 8, Constitution ..... 3
63 Col. L.R. 306, 320 ..... 11
Sections 101 through 103 and 282 of the Patent Code of 1952, 35 U.S.C. §§ 101-103, 282 ..... 3, 20, A1
Supreme Court Rule 19 ..... 3, 8, 13, 20, 21, A1

IN THE

# SUPREME COURT OF THE UNITED STATES

OCTOBER TERM, 1964

## No. 778

CALMAR, INC.,
*Petitioner,*

vs.

COOK CHEMICAL COMPANY,
*Respondent.*

## No. 810

COLGATE-PALMOLIVE COMPANY,
*Petitioner,*

vs.

COOK CHEMICAL COMPANY,
*Respondent.*

ON PETITIONS FOR WRITS OF CERTIORARI TO THE UNITED STATES COURT OF APPEALS FOR THE EIGHTH CIRCUIT

## BRIEF FOR RESPONDENT IN OPPOSITION

This brief is filed on behalf of Cook Chemical Company, respondent, in opposition to the separate Petitions of Calmar, Inc. and Colgate-Palmolive Company for writs of certiorari to the United States Court of Appeals for the

Eighth Circuit to review a judgment against both petitioners. The court below affirmed the judgment of the District Court holding respondent's patent (Scoggin, No. 2,870,943) valid and infringed by a device manufactured by petitioner Calmar, Inc., and sold (in connection with the sale of liquid household insecticide products) by petitioner Colgate-Palmolive Company, which purchased the device from Calmar.

Petitioner Colgate-Palmolive Company has filed a short petition which adopts the Petition of Calmar, Inc. Colgate Petition, p. 3. Our further references herein to the Petition are to the Petition filed by Calmar, Inc.

## OPINIONS BELOW

The opinion of the District Court, including the findings of fact (App. E of Petition), is reported at 220 F. Supp. 414. The opinion of the Court of Appeals for the Eighth Circuit (App. B of Petition), is reported at 336 F.2d 110.

## JURISDICTION

The jurisdictional requisites are adequately stated in the Petition.

## QUESTION PRESENTED

Whether the decisions below, in holding the patent involved to be valid, follow and employ the applicable statutory and constitutional standards of patentability.

## CONSTITUTIONAL PROVISIONS, STATUTES AND RULES INVOLVED

The applicable constitutional provision is Article I, Section 8, Clause 8, and the applicable statutes are Sections 101 through 103 and 282 of the Patent Code of 1952, 35 U.S.C. §§ 101-103, 282, all of which except § 282 are set out in Appendix A to the Petition. Rule 19 of the rules of this Court, 347 U.S. Appendix, 28 U.S.C.A. (Supp.) is also involved. Section 282 of the Patent Code and Supreme Court Rule 19 are set out in the Appendix hereto.

## STATEMENT

The need for such a device as Scoggin's became apparent as soon as manufacturers of liquid household insecticides commenced to furnish a plastic sprayer as a giveaway item with each consumer package of their product. (R. 53, 339) In the case of Cook Chemical Company, that was in 1947. (R. 51) At that time, Cook purchased the sprayers (which are not themselves a patented device) from Calmar Company, a predecessor of Calmar, Inc. (R. 51, 331, 332) The sprayer, which was furnished mounted in a perforated cap fitting the bottle or can in which the insecticide was packaged, was intended for insertion by the consumer, after the purchase, in the insecticide container. (R. 299) After she took her purchase home, the housewife unscrewed and threw away the container cap, inserted the bottom portion of the sprayer (the dip tube) in the bottle or can, and screwed on the perforated substitute container cap in which the sprayer was mounted. (R. 299)

When the goods were displayed for sale, one sprayer unit[1] had to be associated with each individual bottle or can of product. This was accomplished by fastening a cardboard collar (or plastic clip) around the neck of the bottle, with an appropriate hole in the collar in which the sprayer unit was inserted, the sprayer thus being suspended at the side of the insecticide package. (R. 51, 52)

The merchandising technique of giving away a sprayer with each consumer package of liquid insecticide was successful. (R. 60, 61) It was nearly a competitive necessity, in view of the alternate aerosol packages which reach the consumer ready for spraying when a button on the top is pushed. (R. 323, 324)

For ten years, while Cook "hung the sprayer on the side", its sprayer supplier, Calmar Company (petitioner Calmar's predecessor), attempted to develop a package for liquid insecticides in which the sprayer was mounted inside the bottle—that is, a package in which the sprayer unit had been pre-inserted. (R. 322, 325, 333)

The most difficult obstacle in the way of developing a successful shipper-sprayer was the low viscosity of insecticides, and, of course, there are other liquid products besides insecticides which present a similar problem. (R. 60, 315) No leakproof shipper-sprayer was available for use with such products. (R. 315-316) The control of leakage was indispensable to the development of a successful shipper-sprayer because of the messy, unattractive appearance of the package after leakage had occurred. (R. 57) A general difficulty was that the entire sprayer apparatus was a giveaway item, which was mass-produced

1. The expression "sprayer unit" refers to a sprayer mounted in a perforated container cap.

by the millions. (R. 332, 445, 449, 453) Whatever was developed had to be very inexpensive. (R. 75, 76, 78)

In an effort to solve these problems, Calmar Company tried to develop a protective plastic "boot" which would be inserted in the bottle, with the sprayer inserted inside the "boot". (R. 78, 537) This approach was abandoned because it was too expensive and because of the messiness of the necessary removal of the "boot" by the consumer before the sprayer could be operated. (R. 78, 304, 305)

Prior to the Scoggin invention, Calmar Company developed a device which was thought to have a great deal of promise. In this device, called the S-25-LP,[2] the sprayer head could be rotated, and locked, while it was in the fully depressed position. (R. 56, 301) The S-25-LP, which was intended to permit integrated packaging, was submitted by Calmar Company to Cook and other insecticide manufacturers. (R. 56, 300) Cook tested it and rejected it as leaky. (R. 55, 56, 300) It was accepted, however, by S. C. Johnson and Sons, the manufacturer of *Raid* insecticides, and was used by that company until the infringing device became available from Calmar. (R. 56, 303) The S-25-LP was in fact so leaky as to be highly unsatisfactory, and it was the subject of repeated and bitter complaints by the Johnson Company during the period of that company's use of it. (R. 538-540, 303-305) When the Scoggin shipper-sprayer appeared on the market, Calmar was in "grievous difficulty" due to its "grievous, sad experience" with the S-25-LP. (R. 305)

Scoggin's invention made use of a plastic cap, sometimes called an overcap, fitted over the top of the final

---

2. LP stood for leakproof. The device was misnamed in this respect. (R. 75, 76, 540)

package, which overcap was of such height as to hold the sprayer head down in the fully depressed position. (R. 490, 491, col. 1, lines 40-47) The overcap was attached (screwed on) to a plastic collar located just above the perforation in the container cap where the sprayer was mounted. (R. 490, Fig. 3) The overcap featured a seal formed at the point of its contact with the collar, and when screwed down tight, the overcap did not quite come into contact with the perforated container cap beneath. (R. 98, 99, 519) Maintaining the overcap above, and out of contact with, the container cap permitted a tight seal to be effected on the collar. (R. 98, 99, 519) The overcap covered the sprayer head, thus protecting it from damage, and was fitted by the manufacturer of the sprayer unit to the collar on the sprayer with exactly the proper amount of torque. (R. 151, 152, 63) Thus, an insecticide manufacturer desiring to employ the Scoggin device could purchase mounted sprayers assembled with overcaps as one unit, and attach them, as one unit, to the can or bottle containing his product simply by screwing on the container cap, without in any way disturbing the seal of the Scoggin device. (R. 278, 279) This permitted the insecticide packaging to be accomplished by means of automatic machinery. (R. 316)

The court below in its opinion quoted respondent's expert in summary of Scoggin's contribution, as follows:

> " 'The first commercially successful, inexpensive integrated shipping closure pump unit which permitted automated assembly with a container of household insecticide or similar liquids to produce a practical, ready-to-use package which could be shipped without external leakage and which was so organized that the pump unit with its hold-down cap could be itself assembled and sealed and then later assembled and sealed on the container without breaking the first seal.' " 336 F.2d at 113, Pet. 7a.

The several important advantages of the use of the Scoggin device, as compared with hanging the sprayer on the side, are not reviewed here. (See R. 59, 60) They are adequately covered by both opinions below and are nearly self-evident. (336 F.2d 112, Pet. 6a-7a. 220 F. Supp. 416, Pet. 17a) And, of course, the success and desirability of the Scoggin device were recognized by petitioner Calmar, Inc., by its immediate development of the infringing[3] SS-40 shipper-sprayer, and by petitioner Colgate by its purchase and use of that device. (336 F.2d 114, Pet. 9a-10a)

In its limited field, the Scoggin device answered a problem which had been manifest, both to the Calmar Company and to manufacturers of insecticides (and of other products of similarly low viscosity) for a decade, but as to which no solution had been discovered. That Scoggin answered the problem was shown not only by Calmar's copying but also by the fact that Cook received not over one hundred complaints on the sale of fifteen million units. (R. 67)

---

3. Infringement of the Scoggin patent by the SS-40 shipper-sprayer was a hotly contested issue in both courts below. Petitioners have finally abandoned that struggle; they tender no issue here as to infringement. The court below said that "Exercising our appellate prerogative in a patent case to interpret the exhibits for ourselves, we are constrained to agree with the trial court's statement that 'upon close inspection of the devices it is difficult to see how they could be much more similar and yet have any different features'." 336 F.2d at 114, Pet. 10a. Both courts thus found imitation to the point of substantial identity of the patented and infringing devices. Petitioners' sincerity in disparaging the Scoggin invention as "an episode in the puppet theatre of gadgetry" involving "trivial subject matter" (Pet. 17) is betrayed by their conduct in marketing and using such a "tinker's rearrangement". (Pet. 18) Although petitioners give the tribute of their praise to the prior art, it is no longer denied that they give Scoggin the tribute of their imitation. *Diamond Rubber Co.* v. *Consolidated Rubber Tire Co.*, 220 U.S. 428, 441 (1911).

## ARGUMENT

A great deal of petitioners' argument appears to us simply to attack this Court's exercise of its certiorari jurisdiction on the basis of general considerations which apply to the review of decisions by the courts of appeal generally. These considerations are not confined, either to patent cases as a class, or to such patent cases as involve the standard or test of invention. They do not focus on *the present case* at all.

This Court has repeatedly held that certiorari may not be used by a defeated litigant merely for the purpose of securing a second appellate review of his case. See, as one example among a multitude, *Magnum Co.* v. *Coty*, 262 U.S. 159, 163 (1923). The governing considerations as to the exercise of certiorari jurisdiction are set out affirmatively in Rule 19 of the Rules of this Court.

Paragraph 1 of Rule 19 states that certiorari will be granted, in the exercise "of sound judicial discretion, only where there are special and important reasons therefor". More specifically, Rule 19-1(b) states (without limitation) that decisions of the courts of appeal may be reviewed on certiorari—

> "(b) Where a court of appeals has rendered a decision in conflict with the decision of another court of appeals on the same matter; or has decided an important state or territorial question in a way in conflict with applicable state or territorial law; or has decided an important question of federal law which has not been, but should be, settled by this court; or has decided a federal question in a way in conflict with applicable decisions of this court; or has so far departed from the accepted and usual course of ju-

> dicial proceedings, or so far sanctioned such a departure by a lower court, as to call for an exercise of this court's power of supervision."

Convinced that this Court means to uphold its long-established limitations on review on certiorari, respondent sees no need to defend them against a general attack. Neither do we discuss the question whether this Court might properly have granted certiorari in the other patent cases, apparently a "parade of horribles", which are cited in the Petition at page 11, note 13, nor have we investigated whether petitioners have them properly cataloged. The only thing even remotely worth noting about these other decisions is that *not one* of them was rendered by the Eighth Circuit. We confine ourselves to the question whether *this case* presents any "special and important reasons" for review on certiorari.

## I.

## The Standard of Invention Employed by the Eighth Circuit Was Either Correct or Too Favorable to the Petitioners

Petitioners have given grudging approval to the test of invention or patentability as enunciated by the court below. See the first two sentences at the top of page 18 of the Petition. It should have received their unqualified approbation.

Scoggin is a mechanical combination patent, as the court below of course recognized. The court said that:

> "The issue of patentability of a new combination of old elements to form invention must, however, be approached keeping in mind the more exacting standard long required by the Supreme Court. In Selmix Dispensers, Inc. v. Multiplex Faucet Co., Inc., 277 F.2d 884 (8th Cir. 1960), we recognized the Supreme Court's

> admonition in Great Atlantic and Pacific Tea Co. v. Super-Market Equipment Corp., 340 U.S. 147, 152, 71 S. Ct. 127, 130, 95 L. Ed. 162 (1950) that 'The conjunction or concert of known elements must contribute something; only when the whole in some way exceeds the sum of its parts is the accumulation of old devices patentable' ". 336 F.2d at 113, Pet. 7a.

There follows, at that point in the opinion below, citation of *Cuno Engineering Corp.* v. *Automatic Devices Corp.*, 314 U.S. 84, 90 (1941) and *Lincoln Engineering Co. of Illinois* v. *Stewart-Warner Corp.*, 303 U.S. 545, 549 (1938), and of other recent Eighth Circuit cases, in addition to the *Selmix* case cited in the body of the quotation.

*Selmix Dispensers, Inc.* v. *Multiplex Faucet Co., Inc.*, 277 F.2d 884 (8th Cir. 1960), to which the principal reference was made in the present case by the court below, contains one of the Eighth Circuit's two[4] most extensive recent discussions of the standard of invention for combination patents. The *Selmix* opinion was written by Judge Van Oosterhout, who served as a member of the panel which decided the appeal in the present case. In view of the prominent reference in the opinion of the court below to *Selmix*, the fuller discussion of the standard of patentability in that opinion (pp. 886-7) is equally applicable in the present case.

Petitioners assert that there has been confusion among the various courts of appeal concerning the standard of invention during the last fourteen years. (Pet. 9, 10) We make the obvious reply that the principal cause of such confusion has been a diversity of view as to whether the 1952 Patent Code was, or was not, intended to lower the

---

4. The other is *John Deere Company of Kansas City* v. *Graham*, 333 F.2d 529 (8th Cir. 1964), petition for certiorari pending, discussed hereafter.

standard theretofore applied. See Comment, *The Standard of Patentability—Judicial Interpretation of Section 103 of the Patent Act,* 63 Col. L.R. 306 (1963). Among others of the courts of appeal, however, the Eighth Circuit has consistently taken a negative view, and held that the 1952 Patent Code did *not* lower the pre-existing standard. In the Columbia Law Review comment, *supra,* the author, after reviewing the applicable Eighth Circuit decisions, including *Selmix,* concludes as follows:

> "The foregoing cases make it clear that the Eighth Circuit does not treat section 103 as having established a standard of patentability more lenient than that applied immediately prior to the act. In fact, the court has displayed a strong inclination to avoid extensive discussion of section 103 and to determine patentability solely by reference to previous judicial pronouncements." 63 Col. L.R. 306, 320.

The Columbia Law Review comment was written before the Eighth Circuit decisions in *John Deere Company of Kansas City* v. *Graham,* 333 F.2d 529 (8th Cir. 1964), certiorari pending, and in the present case were rendered, and consequently they were not cited. Both fully support the author's conclusion, quoted above, which was reached on the basis of the earlier cases cited in the comment.

The *John Deere* case is a particularly vivid illustration of the strict Eighth Circuit attitude because of the conflict of that decision with two decisions of the Fifth Circuit. The patent in question (Graham, 2,627,798)—a mechanical combination—had been held valid by the District Court, 216 F. Supp. 272 (W.D. Mo. 1963). Two earlier decisions of the United States Court of Appeals for the Fifth Circuit concerning the same patent had held it

valid.[5] The Eighth Circuit reversed the District Court and held the patent invalid for want of invention. Among other things, the Court of Appeals there said

> "This court has adhered to the position that since *Cuno Engineering Corp.* v. *Automatic Devices Corp.*, 314 U.S. 84, 62 S. Ct. 37, 86 L. Ed. 58 (1941), 'the amount of originality and ingenuity, over and beyond novelty and utility, which will constitute invention necessary to sustain a patent for a combination of old elements [such as we have here] in a crowded art, has increased'." 333 F.2d at 531.

While this Court may eventually decide to settle the conflict among the several circuits as to whether the 1952 Patent Code embodies a reduced substantive standard of invention (and, if so, any further question as to whether the applicable statutory provisions as so construed are valid), the present case involves no such question. The Eighth Circuit maintains the former test of invention, as set forth in this Court's landmark decisions, including *Great Atlantic and Pacific Tea Co.* v. *Super-Market Equipment Corp.*, 340 U.S. 147, 152 (1950) and *Cuno Engineering Corp.* v. *Automatic Devices Corp.*, 314 U.S. 84, 90 (1941) in all its pre-1952 fullness and vigor, *and that is the test which was employed in this case.* If the respondent was entitled to the benefit of a more liberal test, it was deprived of that benefit here. No question along this line is open to petitioners in the present case—they contend "that Congress in enacting the 1952 Patent Code did not mean to lower the substantive standard of invention applied in the decisions of this Court". (Pet. p. 10, n. 10.)

---

5. *Jeoffroy Mfg., Inc.* v. *Graham*, 219 F.2d 511 (5th Cir. 1955), cert. den. 350 U.S. 826 (1955); *Graham* v. *Cockshutt Farm Equip., Inc.*, 256 F.2d 358 (5th Cir. 1958).

The Eighth Circuit has consistently so held, and so held in the present case.[6]

## II.

### The Result Reached by Both Courts Below, Holding the Scoggin Patent Valid, Is an Entirely Proper One

Petitioners' basic claim seems to be intended by them to be responsive to the last portion of this court's Rule 19-1(b), *supra*—that the Court of Appeals has, in the language of the rule,

> ". . . so far departed from the accepted and usual course of judicial proceedings, or so far sanctioned such a departure by a lower court as to call for an exercise of this court's power of supervision."

The whole pitch of the Petition is that the result reached here, both by the District Court and by the court below, is a gross miscarriage of justice. One example of the unrestrained language which appears throughout the Petition in this respect is the statement that this is "an

---

6. Petitioners have cited (three times) "An Analysis of Patent Litigation Statistics", Staff Report, Subcommittee on Patents, Trademarks and Copyrights, Senate Judiciary Committee, 86th Cong., 2d Sess. (1961). (Pet. ns. 7, 9 and 11) We wish to point out that Table 20 on pp. 24 and 25 of the "Analysis" shows that the various courts of appeals during the ten years 1949 through 1958 held 140 patents valid and infringed and 400 patents invalid whereas, during the same years, the Eighth Circuit held three patents valid and infringed and 23 patents invalid. The overall ratio is nearly 3:1 against validity. The Eighth Circuit's separate ratio is nearly 8:1 against. That is the crucial comparison, if these statistics have any relation whatever to this case. One of the Circuit Judges recently remarked that "Mechanical combination patents in this court have met with little recent success". *Crome & Company* v. *The Vendo Company*, 299 F.2d 852 (8th Cir. 1962) (dissenting opinion). The statistics certainly bear out his remark.

extreme case which vividly illustrates the recurrent abuse and debasement of the constitutional standard of patentability.'"[7] (Pet. 2)

Of course, an overall attack like petitioners' can be answered only on an overall basis. This case was thoroughly tried before an experienced District Judge, with expert testimony on each side. His findings and opinion speak for themselves. He commenced with a review of the problem of developing an integrated shipper-sprayer, then made a detailed analysis of claims 1 and 2 of the Scoggin patent, and followed with his understanding of the Scoggin structure. He noted our opponents' contention that the Scoggin claims here involved "lack invention, and that every element of the claims in suit is disclosed in the prior art, and that every combination or sub-combination recited in the claims can be found in the prior art". 220 F. Supp. at 418, Pet. 22a.

The District Court's statement of the issue as to validity, and his comments as to whether *"invention"*, as opposed to mere *"mechanical skill"*, was required to combine the old and known elements, as Scoggin did, warrants quotation in full here.

> "Therefore, the question is—was the combination of the admittedly old and known elements employed by Scoggin in accomplishing the result which he set out to achieve, invention or was it merely the result of mechanical skill?
>
> At first glance the mere simplicity of the idea would seem to present a very close question, but it must be remembered that we are dealing with a situ-

---

7. The Petition abounds in other similarly strong statements made in the course of the argument—it should be noted, however, that our quotation is taken from petitioners' statement of the questions presented, not from their argument.

ation that had long given trouble to those who were engaged in that business, and who were familiar with the problem and art.

The manufacturers of sprayers had not been able to solve the problem of leakage and breakage in the shipment of the products with which their spray pumps were used. Numerous ideas had been suggested by Calmar, the experiments were made, but none of them solved the problem. These facts and circumstances certainly must lead us to seriously doubt that it was so simple a mechanical problem as it seems now that it has been solved. However, simplicity and obviousness after the event do not negative invention. Goodyear Tire & Rubber Co. v. Ray-O-Vac Co., 321 U.S. 275, and cases cited in note 4, p. 279, 64 S. Ct. 593, p. 595, 88 L. Ed. 721.

Now that it has been solved, one trained in mechanics and in the art might say, 'Well, that was a very simple problem and should easily have been solved', but the fact that many people were thinking about and working on it, and were unable to come up with the answer, raises it above the principle of mere simplicity. Hindsight is generally 20-20." 220 F. Supp. at 419, Pet. 23a.

On the appeal from the District Court's judgment, the court below thoroughly reviewed the findings and the evidence, in the light of petitioners' contentions. Here again, the nature of that court's consideration must speak for itself. But we wish to quote the passage in the opinion below, in which the Court of Appeals, after an analysis of the prior art, including all of that which is cited in the Petition, poses the essential question as to validity and answers it.

"Factual comparison of the individual elements of the Cook-Bakan 2 sprayer unit with prior art would permit a finding that its components are not novel

per se—threaded over-cap depressing sprayer head (Lohse Pat. No. 2,119,884); complementary threaded collar (Lohse Pat. No. 2,119,884; Darley Pat. No. 1,447,712); space tolerance between over-cap and container cap (Slade Pat. No. 2,844,290; Livingston Pat. No. 2,715,480); and shoulder-rib seal at zone beneath sprayer head and above threads (Mellon Pat. No. 2,586,687). *However, there is nothing in the prior art suggesting Scoggin's unique combination of these old features in such an assemblage as would solve the production, shipping and operation problems which for years beset the insecticide industry as well as producers of other low viscous liquids.* The patentee's 'closure assembly' eliminated the costly and time consuming steps in production requiring attachment of the sprayer holder to the outside of the container and insertion of the sprayer, while at the same time providing a protected, sealed sprayer unit which need only be screwed onto the top of the insecticide container like a metal cap, not to be disturbed until removal of the over-cap and application by the ultimate consumer. *This novel 'marriage' of the sprayer with the insecticide container which took years in the discovery is neither taught by, nor readily discernible from the application of mechanical skill to the elements of the prior art."* 336 F.2d at 113, Pet. 8a. (Emphasis supplied)

One factor that is not mentioned at all in the Petition should be noted—both the District Court and the court below properly held that petitioners had the burden of proof on the issue of validity. The District Court in the first instance cited this Court's decision in *Mumm* v. *Jacob E. Decker & Sons,* 301 U.S. 168 (1937), and the Eighth Circuit's decision in *Ezee Stone Cutter Mfg. Co.* v. *Southwest Industrial Products,* 262 F.2d 183 (8th Cir. 1958), as to the burden of proof, and quoted portions of both opinions. 220 F. Supp. at 420, headnotes 2 and 3, Pet. 25a. The court below, citing 35 U.S.C. Sec. 282,

simply stated that "The statute provides that a patent shall be presumed valid and the burden of establishing invalidity rests on the party asserting it", 336 F.2d at 113, Pet. 7a, thus quoting the exact language of the present statute. This Court said in *Mumm* that the burden of proving invalidity "is a heavy one, as it has been held that 'every reasonable doubt should be resolved against him'." 301 U.S. at 171.

In an opinion rendered a week after the opinion below, the Eighth Circuit quoted and approved an earlier statement of its rule on review of patent cases involving the test of invention, as follows:

> "When a trial court in a patent case has followed proper legal standards in determining the question of the presence or absence of patentable invention, its finding on that issue, if sustained by the evidence, will not be disturbed on appeal." *Ditto, Inc.* v. *Minnesota Mining & Mfg. Co.*, 336 F.2d 67, 69 (8th Cir., 1964).

The Circuit Court followed that rule here. Petitioners are asking this Court to review the identical record which the court below found sustained the District Court's ultimate finding of invention, without any showing of a misapprehension by either court as to the legal test of patentability.

To what is said in the Petition about the undesirability of extending patent monopolies beyond the point where they reflect invention, we reply in the words of this Court that "By the very terms of the statute, the grant is nothing more than a means of preventing others, except under a license from the patentee, from appropriating his invention". *Special Equipment Co.* v. *Coe*, 324 U.S. 370, 378 (1945). The *exclusive use* of the Scoggin invention from the time the patent was issued six years

ago would have given respondent an important advantage over competing manufacturers of household insecticides, including the corporate giant which is a petitioner here. Respondent was entitled to that advantage, provided, of course, that the patent is valid—that it does indeed embody "invention". The present lengthy litigation has explored every aspect of that question. During its pendency in the District Court and the Court of Appeals, respondent's right to exclude others from the Scoggin invention has been converted, over its vigorous objections, into a claim for damages so far as that critical period is concerned. At this stage, and with the case in this posture, the respondent is entitled to assert that it has been wronged by being denied the benefit of its lawful monopoly during roughly one-third of the total term of the patent.

**The Factor of Commercial Success**

As to the petitioners' more specific contention, that too much weight was given by the courts below to the factor of commercial success, we wish to point out that throughout this long litigation, petitioners have contended that the Scoggin device was so leaky as not to be satisfactory for its purpose—a contention which is repeated in the Petition. (p. 7, n. 4 and p. 19, n. 22) Naturally this called for evidence on respondent's part that the device manufactured under the patent was sufficiently perfect so as to be useful. The District Court found as a fact that the Scoggin device, after slight initial modifications, solved the leakage problem. 220 F. Supp. at 418 (third paragraph, second column) and 421 (headnote 5); Pet. 22a and 27a.

When the court below mentioned the evidence that respondent had sold fifteen million of the Bakan 2 shipper-sprayers and had received not over 100 complaints (336

F.2d at 113, 114, Pet. 9a) it spoke in terms of commercial success—but the evidence was vital on the issue of *utility*. In any case, petitioners' challenge of the utility of the Scoggin device necessarily resulted in the evidence referred to being given more prominence than it would have received if utility had not been a highly contested issue.

On the merits of this point, however, we wish to note that the District Court specifically said that commercial success might be taken into consideration in determining the question of invention, but that it was not necessarily determinative, citing this Court's decision in *Temco Elec. Motor Co.* v. *Apco Mfg. Co.*, 275 U.S. 319 (1928) and other authorities. 220 F. Supp. at 421, Pet. 26a, 27a. And the court below said that "Evidence of commercial success in a doubtful case may turn the scale in favor of the patentee". 336 F.2d at 114, Pet. 9a. For a recent case in which the Court of Appeals rejected an argument that the commercial success of a device established its patentability, see *Selmix Dispensers, Inc.*, v. *Multiplex Faucet Co., Inc.*, 277 F.2d 884 (8th Cir. 1960), at headnote 5 on page 887. (We have previously noted that the *Selmix* opinion was written by Judge Van Oosterhout, who served as a member of the panel on the court below in this case.)

It appears to the respondent that the evident and long-felt need for an integrated shipper-sprayer is a much more important factor bearing on the question of invention than is the commercial success of the Scoggin device. And we feel that a fair reader of both of the opinions below would agree that both the District Court and the Court of Appeals gave far more weight to this factor on the issue of invention than they did to the factor of commercial success, treated as such. As we have already pointed out, the success of the Scoggin device was considered, and it *must* be considered, in connection with the

other point—that is, whether the Scoggin device successfully answered the problem of providing a leakproof integrated shipper-sprayer.

## CONCLUSION

We have shown that petitioners simply disregard this Court's basic limitations on the exercise of its certiorari jurisdiction, as set forth in Rule 19. Indeed, they devote a great part of the Petition to a direct attack on "the certiorari policy".

There is no conflict here between circuits as to the validity of the patent involved, such as is presented by *John Deere Company of Kansas City* v. *Graham*, 333 F.2d 529 (8th Cir. 1964), petition for certiorari pending, where the Eighth Circuit found lack of invention in a patent which the Fifth Circuit had twice previously sustained. And, further, there is no difference here between the District Court and the Court of Appeals, nor even a dissenting opinion in the court below.

The only important unsettled question of federal law in the area of the standard of patentability is whether the 1952 Patent Code (particularly, but not confined to, 35 U.S.C. Sec. 103) did, or did not, lower the pre-existing test of invention as enunciated in the prior decisions of this Court. This case does not present that question.

The court below applied in this case, and it follows generally, the (pre-1952 Patent Code) landmark decisions of this Court and particularly *Cuno Engineering Corp.* v. *Automatic Devices Corp.*, 314 U.S. 84 (1941) and *Great Atlantic and Pacific Tea Co.* v. *Supermarket Equipment Corp.*, 340 U.S. 147 (1950), as specifying the currently applicable statutory test of invention.

The patent involved here is, as the District Court said, for an invention "in a narrow art, one pertaining primarily to the sealing, shipping and use of insecticides by means of liquifying sprayers". 220 F. Supp. at 421, Pet. 27a. In itself, the patent certainly has no great public importance.

Both the findings and opinion of the District Court, and the opinion of the Court of Appeals, show that this case was thoroughly tried in the first instance, and that all of petitioners' contentions have been attentively reviewed below. These opinions themselves repel the petitioners' contention here that a gross miscarriage of justice has occurred in this case. The petitioners had the burden of proof and simply failed to carry it. Both courts reached the correct result.

In short, the Petition totally fails to set forth any "special and important reasons" whatever for the grant of certiorari here. In consequence, the Petition is nothing more than an at-large attack on this Court's certiorari policy, as expressed in its Rule 19.

The Petitions of Calmar, Inc., and Colgate-Palmolive Company for certiorari should be denied.

Respectfully submitted,

ROBERT D. HOVEY
1816 Federal Reserve Bank Building
Kansas City, Missouri 64106

VERNON B. KASSEBAUM
1500 Home Savings Building
Kansas City, Missouri 64106

*Attorneys for Respondent*

*Of Counsel*:

HOVEY, SCHMIDT, JOHNSON & HOVEY
WATSON, ESS, MARSHALL & ENGGAS

January 1965

## APPENDIX TO RESPONDENT'S BRIEF

The first paragraph of Section 282 of the Patent Code of 1952, 35 U.S.C. Sec. 282, is as follows:

§282. Presumption of validity; defenses

"A patent shall be presumed valid. The burden of establishing invalidity of a patent shall rest on a party asserting it.

* * *"

Rule 19 of the Rules of the Supreme Court of the United States, 347 U.S. Appendix, 28 U.S.C.A. (Supp.) reads as follows:

"19.

Considerations Governing Review on Certiorari

1. A review on writ of certiorari is not a matter of right, but of sound judicial discretion and will be granted only where there are special and important reasons therefor. The following, while neither controlling nor fully measuring the court's discretion, indicate the character of reasons which will be considered:

(a) Where a state court has decided a federal question of substance not theretofore determined by this court, or has decided it in a way probably not in accord with applicable decisions of this court.

(b) Where a court of appeals has rendered a decision in conflict with the decision of another court of appeals on the same matter; or has decided an important state or territorial question in a way in conflict with applicable state or territorial law; or has decided an important question of federal law which has not been, but should be, settled by this court; or

has decided a federal question in a way in conflict with applicable decisions of this court; or has so far departed from the accepted and usual course of judicial proceedings, or so far sanctioned such a departure by a lower court, as to call for an exercise of this court's power of supervision.

2. The same general considerations outlined above will control in respect of petitions for writs of certiorari to review judgments of the Court of Claims, of the Court of Customs and Patent Appeals, or of any other court whose determinations are by law reviewable on writ of certiorari."

COPY

FILED

IN THE

# Supreme Court of the United States

OCTOBER TERM, 1964

No. 37

CALMAR, INC., *Petitioner*,

v.

COOK CHEMICAL COMPANY, *Respondent*

On Petition for a Writ of Certiorari to the United States Court of Appeals for the Eighth Circuit

## REPLY BRIEF FOR PETITIONER

ABE FORTAS
VICTOR H. KRAMER
DENNIS G. LYONS
1229 Nineteenth Street, N.W.
Washington, D. C. 20036
*Attorneys for Petitioner*

*Of Counsel:*

FRANCIS G. COLE
WATSON, COLE, GRINDLE & WATSON

ARNOLD, FORTAS & PORTER

PRESS OF BYRON S. ADAMS, WASHINGTON, D. C.

IN THE

# Supreme Court of the United States

OCTOBER TERM, 1964

---

No. 778

---

CALMAR, INC., *Petitioner*,

v.

COOK CHEMICAL COMPANY, *Respondent*.

---

**On Petition for a Writ of Certiorari to the United States Court of Appeals for the Eighth Circuit**

---

## REPLY BRIEF FOR PETITIONER

---

1. On January 18, 1965, the Court granted certiorari in *Graham* v. *John Deere Co.*, No. 580. The *Graham* case involves the issue of patent validity, and presents the unique[1] situation of a square and admitted conflict of circuits as to the validity of a single patent.

[1] We know of no other petition for certiorari raising such a square conflict of circuits as to the validity of a single patent during the entire period from this Court's decision in the case of *Great Atlantic & Pacific Tea Co.* v. *Supermarket Equipment Corp.*, 340 U.S. 147 (1950) through the *Graham* petition itself.

See *Jeoffroy Manufacturing, Inc.* v. *Graham*, 219 F. 2d 511 (5th Cir. 1955), *cert. denied*, 350 U.S. 826 (1955); see *John Deere Co.* v. *Graham*, 333 F. 2d 529 (8th Cir. 1964).

The grant of the writ of certiorari in the *Graham* case, we submit, underscores the need for the Court also to grant certiorari in a case, like the present one, which vividly illustrates the debasement of the standard of patentability. For the present case—unlike *Graham*—involves a holding by the court below that a patent on a trivial gadget was valid. As we demonstrate extensively in our Petition (pp. 9-15) it is the recurrent abuse of the standard of patentability by the Courts of Appeals, sanctioning patents on devices of the nature of the one involved here, that causes the situation which this Court must correct.[2]

2. The paradox to be found between the decision of the Court of Appeals for the Eighth Circuit in this case and the decision of an entirely different panel of that court in the *Graham* case emphasizes the nature of this Court's task on review in this area. In both cases, the decisions make all the appropriate references to the decisions of this Court; and the Brief in Opposition dwells on the point (pp. 9-13) that the court below in this case paid verbal respect to the standards laid down by the decisions of this Court through the case of *Great Atlantic & Pacific Tea Co.* v. *Supermarket Equipment Corp.*, 340 U.S. 147 (1950).

---

[2] The Brief in Opposition does not deny this decisional trend, but simply makes the assertion that heretofore it has not extended to the Eighth Circuit (p. 9). But certainly this Court's supervision over the standard of patentability is equally called for, without regard to whether the particular lower court in question has itself frequently or infrequently deviated from the proper standard.

But the vital difference is that the *Graham* panel applied those standards in practice,[3] not simply verbally. On the other hand, even the most cursory reading of the two opinions indicates that the panel of the Eighth Circuit which sat in the present case applied in practice an entirely different standard of patentability from that applied in the *Graham* case.[4] As we pointed out in our Petition for Certiorari (pp. 10-13), the standard of patentability embraced in the Constitution can be as effectively watered down by a pattern of adjudication—ostensibly on the basis of determinations of fact—which has the practical effect of causing that standard to be debased, as through express assertions that this Court's decisions through 1950 do not state the law any longer. Certainly the certiorari jurisdiction exists to prevent such a practical debasement of Constitutional standards through repeated misapplication. As *Rogers* v. *Missouri Pac. R. Co.*, 352 U.S. 500 (1957) teaches, "special and important reasons for the grant of certiorari . . . are certainly present" where lower federal courts "persistently" misapply the governing standard. (*Id.*, at 510) In such an area, certiorari should be granted to "correct instances of improper administration" of the standard and thus "prevent its erosion." (*Id.*, at 509)

---

[3] The *Graham* panel recognized—as the Court below did not—that: "The public is a silent but an important and interested party in all patent litigation, and is entitled to protection against the monopolization of what is not lawfully patentable." See 333 F. 2d, at 535.

[4] We also submit that a reading of the two opinions will indicate that the Graham patent was not a "gadget" patent as the one for the bottle cap in question here most assuredly was.

The need for supervisory review—so pressing in this area, as we have developed in the Petition—cannot be discharged simply through the grant of certiorari in a case involving a unique and atypical situation, such as the *Graham* case.[5] Rather, the Court should also take in hand the root of the problem, by granting certiorari in a case—like this one—which represents the nadir in sanctioning patents on petty gadgets.

3. Inasmuch as the Court has granted certiorari in the *Graham* case, and will thus finally be hearing argument on a question of patent validity, we urge it to grant certiorari in this case and thus afford itself a broader look at the application of the standard of patentability than can be provided by a single case—particularly one, like *Graham,* involving a comparatively technical and complex art. To this end we respectfully suggest that the Court consider hearing argument on our case together with that in the *Graham* case.[6] As we develop in the Petition, the patent at

---

[5] The *Graham* case obviously involves a patent in a much more complex art than the one at bar—one in which there is much more likely to be patentable invention than in the fashioning of bottle caps. Should the Court affirm the judgment of the Court of Appeals in *Graham,* it is highly doubtful whether, in the light of the patent there involved, any meaningful guidance will be furnished to the lower courts with respect to the patenting of gadgets—where, as we have demonstrated, the real problem exists. On the other hand, should the Court reverse the judgment in the *Graham* case, and deny certiorari in this case, the Courts of Appeals might well be reinforced in the sanctioning of patents on gadgets such as the one involved in this case.

[6] In our case, the record has been printed for the Court of Appeals; accordingly, this case could be ready on the Court's docket at an early date.

bar—one on a household gadget—is one which lends itself to the drawing of an object lesson for the Courts of Appeals. This factor is not present in the *Graham* case.

Moreover, as we develop in our Petition, this case affords an example—which the *Graham* case does not—of the growing substitution of "commercial success," or commercial innovation, for invention, which is being countenanced by the Courts of Appeals. Despite the unconvincing apology of the respondent for this unmistakable tone in the opinion of the Court of Appeals (Br. in Opp., pp. 18-20), it is perfectly evident that the court below relied heavily on this factor.

Indeed, the entire Statement of Facts in the Brief in Opposition gives the point away by abandoning any effort to justify the Scoggin patent in terms of the prior patented art which we extensively discuss in our Petition (pp. 4-8), and by discussing the Scoggin device solely in terms of the commercial history of the gadgets involved.[1] (See Br. in Opp., pp. 3-7; see also

---

[1] In passing, we must say that that history is not very accurately stated: For example, it is simply not so, as suggested by the Brief in Opposition, p. 7, n. 3, that the Calmar device found to be infringing was a "copy" of the Scoggin device. Rather, it employed an entirely different kind of seal from the admittedly imperfect sort of seal employed by Scoggin. See Pet., pp. 7-8. And Scoggin's rearrangement of the prior art devices only involved the seal. It was only through an extravagant application of the "doctrine of equivalents" of *Graver Tank & Mfg. Co.* v. *Linde Air Products Co.*, 339 U.S. 605 (1950) that the court below found infringement. Moreover, among other things, the Brief in Opposition ignores the fact that the ultimate solution to the "problem" of liquid insecticide sprayers was not simply in preventing the liquid from getting out of the cap but in preventing it from getting out of the bottle. This was Calmar's aim in the development of its

pp. 14-15). That reliance must be placed exclusively upon such factors in defense of the patent at bar[8] underscores the point we make in the Petition; that the real basis for the decision below was not the presence of an invention in the bottle cap shown in respondent's patent, but the "commercial success"—dubious enough in its own terms[9]—which the Court of Appeals found respondent's sprayer to have enjoyed.

The presence of this factor—completely foreign to the opinion of the other panel of the Eighth Circuit in the *Graham* case—is a further reason why this Court should grant certiorari in the case at bar, to afford itself a more comprehensive view of the last fourteen years' application of the standard of patentability in

---

sprayer; this aim was achieved in Calmar's SS-40, and then belatedly adopted by respondent in its Bakan 3 sprayer. (Pet., pp. 7-8)

Respondent also belabors at length that last resort in patent cases, the "presumption of validity" attaching to the Patent Office's action in granting the patent. (Br. in Opp., pp. 3, 16-17, 21) But here the Patent Office's apparent basis for the grant of the Scoggin patent—the space between the lower edge of the hold-down cap and the container cap—was repudiated by the District Court as "not new or novel" and "not a part of the invention." (Pet., App. E., p. 25a)

[8] Contrast the approach of the *Graham* panel of the Eighth Circuit in applying the classic test of making an analysis of the prior patent art and, in the light of that analysis, examining whether the making of the combination in question involved the exercise of "inventive genius." See 333 F. 2d, at 531-34. It is this difference in approach which is the most fundamental difference between the approach of the *Graham* panel and that of the panel which sat below.

[9] See Pet., p. 18, n. 22; p. 20, n. 25.

practice, than can be afforded by review simply of the *Graham* case.[10]

## CONCLUSION

For the reasons stated in the Petition for Certiorari and in this Reply Brief, the Petition for Certiorari should be granted. As noted, we also respectfully suggest that the Court might wish to hear argument on this case together with argument on the *Graham* case.

Respectfully submitted,

ABE FORTAS
VICTOR H. KRAMER
DENNIS G. LYONS
1229 Nineteenth Street, N.W.
Washington, D. C. 20036
*Attorneys for Petitioner*

*Of Counsel:*

FRANCIS G. COLE
WATSON, COLE, GRINDLE & WATSON

ARNOLD, FORTAS & PORTER

January 1965.

---

[10] As we suggested in the Petition, antitrust problems in the patent area are greatly compounded by low standards in issuing and judicially reviewing patents. (Pet., p. 15) This Court recently evidenced its continuing concern over antitrust-patent problems by granting review of two more cases in this area. *United States* v. *Huck Mfg. Co.*, No. 538, probable jurisdiction noted, January 18, 1965; *Walker Process Equipment, Inc.* v. *Food Machinery & Chemical Corp.*, No. 602, cert. granted, January 18, 1965. Once again, we strongly suggest that even a more direct way of attacking the problems in this area is through a full resumption of supervision of the application of the standard of partentability in the Courts of Appeals.

IN THE

# Supreme Court of the United States

OCTOBER TERM, 1964

---

No. 778

---

CALMAR, INC., *Petitioner,*

v.

COOK CHEMICAL COMPANY, *Respondent.*

---

**On Petition for a Writ of Certiorari to the United States Court of Appeals for the Eighth Circuit**

---

## SUPPLEMENTAL BRIEF FOR PETITIONER

---

We are filing this Supplemental Brief to call to the Court's attention a very recent development which reflects the growing concern over the maintenance of the standard of patentability in the decisions of the lower courts, and indicates the appropriateness of review of this case.

On February 12, 1965, the Solicitor General filed a Petition for Certiorari on behalf of the United States in No. 906, *United States* v. *Adams*. The Solicitor General's Petition refers to the "pressing problems" relating to the administration of the patent laws which presently exist, and seeks review of a decision of the Court of Claims which the Solicitor General urges applied an improperly low standard of patentability.

The Solicitor General states (Adams Pet., p. 7):

> "We challenge the ruling not because the patentability of the Adams battery is a matter of great intrinsic importance, but because we believe that this case sharply illustrates a growing tendency in the lower federal courts to adopt and apply a new and much laxer standard of invention which, in its aggregate manifestations, seriously impairs efforts to maintain a predominantly competitive economy by creating countless unnecessary and unwarranted monopolies. . . . We think that there is need for this Court to restate, as it has in times past, the proposition that such minor technical advances are not to be rewarded with patent monopolies."

The Solicitor General makes it clear that the Government's interest lies not only in its position as defendant in patent infringement suits brought in connection with Government contracts, but, more importantly, in the fact that the Government is "charged with protecting the public interest in a competitive economy, and that includes guarding against the restraints upon competition occasioned by the indiscriminate grant of unwarranted patents." (Adams Pet., p. 13)

The Solicitor General urges that the Court review a number of cases involving the issue of the standard of patentability, in order to provide a view of the matter "in broad perspective." (Adams Pet., p. 16) He points out, in contrast to the Court's failure to grant a single petition in this area from 1950 through 1965, that during the period 1925 through 1949 "the Court reviewed the application of the standard of patentability in no less than one hundred cases." (Adams Pet., p. 15)

The Solicitor General expressly urges that our Petition be one of those granted by the Court for a plenary review of the application of the standard of patentability (Adams Pet., pp. 15-16):

> "We note that this Court has recently granted certiorari in the case of *Graham* v. *John Deere Co.*, No. 580, this Term, a case which also involves the standard of patentability. In *Graham* the Court will have before it the holding of the Eighth Circuit (in conflict with a holding of the Fifth Circuit relating to the same patent) that, in order to be patentable, a combination of old elements in a new way cannot be obvious and must bring forth a significantly different result than that disclosed by the prior art. The Court also has before it the petition in *Calmar, Inc.* v. *Cook Chemical Co.*, No. 778, this Term, likewise involving a patent on a combination, which undertakes to show that there has been a general debasement of the standard of patentability in the past decade. The government contemplates that it will shortly file a petition in the case of *Application of Andrew John Manson*, in which the Court of Customs and Patent Appeals recently held that a patent may be obtained on a process for the production of a chemical compound notwithstanding the fact that the applicant is unable to demonstrate any utility for the compound.

> "These cases and the present case afford the Court an opportunity to consider pressing problems relating to the administration of the patent laws in a variety of contexts and in broad perspective. A congressional study observed several years ago that 'the standard of invention [is] clouded in uncertainty' and 'the various circuits are unable even to agree as to the legislative intent expressed in Section 103. One view holds that the standard of patentability was unchanged by the enactment of Section 103, while the other position is that it was the intent of Congress to relax the rigid test of patentability laid down by the Supreme Court.' The need for dissipation of the prevailing uncertainty and for greater uniformity in the application of the governing standards counsels review by this Court."

The Solicitor General, following the theory of our Petition, observes, as to the standard of patentability (Adams Pet., p. 13): "that there is an urgent need to exercise a continuing measure of supervision to assure that it is not relaxed by years of unreviewed departures effectively changing, while purporting to repeat, the established rule. See, in this connection, the petition recently filed in *Calmar, Inc.* v. *Cook Chemical Co.*, No. 778, this term."

These views of the Solicitor General lend further weight to the pressing necessity of this Court's resuming a fuller participation in supervising the administration of the constitutional standard of patentability, and to the grant of certiorari in this case as part of that supervision.

## CONCLUSION

For the reasons stated in the Petition, and in our Reply Brief and this Supplemental Brief, the Petition for a Writ of Certiorari should be granted.

Respectfully submitted,

ABE FORTAS
VICTOR H. KRAMER
DENNIS G. LYONS
1229 Nineteenth Street, N.W.
Washington, D. C. 20036
*Attorneys for Petitioner*

*Of Counsel:*

FRANCIS G. COLE
WATSON, COLE, GRINDLE & WATSON
ARNOLD, FORTAS & PORTER

February, 1965

FILE COPY

Office-Supreme Court,
FILED
FEB 24 1965
JOHN F. DAVIS, CLERK

IN THE

# SUPREME COURT OF THE UNITED STATES

OCTOBER TERM, 1964

No. [redacted] 37

CALMAR, INC.,
*Petitioner,*

vs.

COOK CHEMICAL COMPANY,
*Respondent.*

ON PETITION FOR A WRIT OF CERTIORARI TO THE UNITED STATES COURT OF APPEALS FOR THE EIGHTH CIRCUIT.

## RESPONDENT'S REPLY TO PETITIONER'S SUPPLEMENTAL BRIEF

ROBERT D. HOVEY
1816 Federal Reserve Bank Building
Kansas City, Missouri 64106

VERNON B. KASSEBAUM
1500 Home Savings Building
Kansas City, Missouri 64106
*Attorneys for Respondent*

Of Counsel:

HOVEY, SCHMIDT, JOHNSON & HOVEY
WATSON, ESS, MARSHALL & ENGGAS

R. L. MENDENHALL, INC., 1108 Oak Street, Kansas City, Mo. 64106, HArrison 1-3030

IN THE

# SUPREME COURT OF THE UNITED STATES

OCTOBER TERM, 1964

## No. 778

CALMAR, INC.,
*Petitioner,*

vs.

COOK CHEMICAL COMPANY,
*Respondent.*

ON PETITION FOR A WRIT OF CERTIORARI TO THE UNITED STATES COURT OF APPEALS FOR THE EIGHTH CIRCUIT.

### RESPONDENT'S REPLY TO PETITIONER'S SUPPLEMENTAL BRIEF

Certiorari having been granted in *Graham* v. *John Deere Co.*, No. 580, other petitioners, particularly petitioner Calmar, Inc. here and the petitioner in *United States of America* v. *Bert N. Adams*, No. 906, are trying to persuade the Court that certiorari should be granted in their cases also, on the ground that their cases should be combined for consideration along with *Graham*. All three cases are said by petitioner here, and by the Solicitor General in the *Adams* petition, to involve the standard of invention under 35 U.S.C. §103.

Respondent protests petitioner's attempt to persuade the Court to grant certiorari here in order to consolidate

this case, so to speak, for consideration with *Graham*, for the following reasons:

1. The major legal question in the "standard of invention" area is the effect of Section 103 of the Patent Code on the previously-existing standard of invention, as enunciated in the controlling decisions of this Court, particularly *Cuno Engineering Corp.* v. *Automatic Devices Corp.*, 314 U.S. 84 (1941) and *Great Atlantic and Pacific Tea Co.* v. *Supermarket Equipment Corp.*, 340 U.S. 147 (1950). As is fully argued under point I in our Brief in Opposition, at page 9, *this* case does *not* present that question. The Eighth Circuit has consistently held, and it held in this case, that this Court's landmark *Cuno* and *A & P* decisions remain the controlling authorities. *If* that ruling was erroneous, the error favored the petitioner here, not respondent.

2. The *Graham* case exemplifies a conflict between decisions of the Eighth and Fifth Circuits as to the validity of the same patent. The Fifth Circuit twice held it valid. Later, in *Graham*, the Eighth Circuit held it invalid for lack of invention. There could scarcely be a more vivid concrete illustration than *Graham* of the strict attitude of the Eighth Circuit toward combination patents. That strict attitude is also illustrated by the recent statistical record of the Eighth Circuit, compared with others of the Courts of Appeals, which is referred to in our Brief in Opposition at page 13, note 6. The Eighth Circuit is decidedly *not* subject to being charged generally with being too loose on the question of patentability.

3. All that is really involved in this case is the petitioners' contention that, although they concede that the Eighth Circuit generally enunciates a legally correct standard of invention, and that it did so here, nevertheless the Eighth Circuit here misapplied the standard. We have argued to the contrary under Point II of the Brief in Opposition, at page 13. What is important at this stage, how-

ever, is that no other case—*Graham*, *Adams*, or any further ones in which petitions may be later filed, may fruitfully be combined with this one. Where the application of a concedly correct legal test to the facts and circumstances of a particular case is the issue, then each tub must of necessity stand on its own bottom.

## CONCLUSION

The grant of certiorari in the *Graham* case furnishes no reason for granting certiorari here. *Graham* presents a conflict between circuits as to the proper legal standard of patentability—no such point is involved here, nor does this case involve conflicting decisions. It is not the purpose of certiorari merely to provide dissatisfied litigants with a second appellate review of the facts, such as is sought by the petitioners in this case, and furthermore absolutely no purpose could be served by combining several cases of that kind for review, since such cases imperatively demand an intensely individualized treatment. For the reasons set forth here and in our Brief in Opposition, the Petition for Certiorari should be denied.

Respectfully submitted,

ROBERT D. HOVEY
1816 Federal Reserve Bank Building
Kansas City, Missouri 64106

VERNON B. KASSEBAUM
1500 Home Savings Building
Kansas City, Missouri 64106

*Attorneys for Respondent*

Of Counsel:

HOVEY, SCHMIDT, JOHNSON & HOVEY
WATSON, ESS, MARSHALL & ENGGAS

February 1965

LE COPY

Office-Supreme Court
FILED
MAR 24 196
JOHN F. DAVIS, CL

IN THE

# SUPREME COURT OF THE UNITED STATES

OCTOBER TERM, 1964.

No. [redacted] 43

COLGATE-PALMOLIVE COMPANY,
*Petitioner,*

vs.

COOK CHEMICAL COMPANY,
*Respondent.*

ON PETITION FOR A WRIT OF CERTIORARI TO THE UNITED STATES COURT OF APPEALS FOR THE EIGHTH CIRCUIT.

## SUPPLEMENTAL BRIEF FOR PETITIONER

GEORGE H. MORTIMER,
300 Park Avenue,
New York, New York 10022,
HOWARD A. CRAWFORD,
JACK W. R. HEADLEY,
15 West Tenth Street,
Kansas City, Missouri 64105,
*Attorneys for Petitioner.*

Of Counsel:
LATHROP, RIGHTER, GORDON & PARKER,
15 West Tenth Street,
Kansas City, Missouri 64105.

R. L. MIDDLEHALL, INC., 1108 Oak Street, Kansas City, Mo. 64106, HArrison 1-3080

IN THE

# SUPREME COURT OF THE UNITED STATES

---

OCTOBER TERM, 1964.

---

## No. 810

---

COLGATE-PALMOLIVE COMPANY,
*Petitioner,*

vs.

COOK CHEMICAL COMPANY,
*Respondent.*

---

ON PETITION FOR A WRIT OF CERTIORARI TO THE UNITED STATES COURT OF APPEALS FOR THE EIGHTH CIRCUIT.

---

**SUPPLEMENTAL BRIEF FOR PETITIONER**

As we have advised the Court in our Petition for Writ of Certiorari heretofore filed and now pending before this

Court, this case and the case of Calmar, Inc., v. Cook Chemical Company, No. 778, now pending before this Court on Petition for Certiorari, were consolidated for trial in the District Court for the Western District of Missouri and the District Court entered one judgment against both plaintiffs. The two actions were consolidated on appeal to the Court of Appeals for the Eighth Circuit which handed down a single opinion and entered one judgment which affirmed the judgment of the District Court.

Respondent, Cook Chemical Company, has filed a single brief in opposition to the separate petitions of Calmar, Inc., in No. 778 and of Colgate-Palmolive Company in No. 810. Since respondent's brief in opposition to the petitions in both cases was filed, three additional briefs have been filed in Case No. 778. They are as follows:

(1) Reply Brief of Petitioner, Calmar, Inc.

(2) Supplemental Brief of Petitioner, Calmar, Inc.

(3) Respondent's Reply to the Petitioner's Supplemental Brief.

Petitioner Colgate-Palmolive Company is in full agreement with the Reply Brief and the Supplemental Brief filed by petitioner Calmar, Inc., in No. 778, adopts the views therein set forth and respectfully requests the Court to consider said briefs as if filed in this case.

There being but one judgment against both plaintiffs below (petitioners here in No. 778 and No. 810), justice could not be done by granting the Petition for Writ of Certiorari in No. 778 without granting the Petition for Certiorari in No. 810, and petitioner Colgate-Palmolive

Company respectfully requests the Court to grant the petitions for Writ of Certiorari in both cases.

Respectfully submitted,

GEORGE H. MORTIMER,
300 Park Avenue,
New York, New York 10022,
HOWARD A. CRAWFORD,
JACK W. R. HEADLEY,
15 West Tenth Street,
Kansas City, Missouri 64105,
*Attorneys for Petitioner.*

Of Counsel:
LATHROP, RIGHTER, GORDON & PARKER,
15 West Tenth Street,
Kansas City, Missouri 64105.

## INDEX


| | Page |
|---|---|
| Opinions Below | 1 |
| Jurisdiction | 1 |
| Question Presented | 2 |
| Constitutional Provision and Statutes Involved | 2 |
| Statement of Facts | 2 |
| Summary of Argument | 10 |
| Argument | 14 |
| I. The Decision of the Courts Below Countenances a Debasement of the Constitutional Standard of Invention | 14 |
| II. The Scoggin Patent Falls Vastly Short of Meeting the Application of the Standard of Invention Consistently Demanded of a Valid Mechanical Combination Patent | 22 |
| III. The Courts Below Erroneously Permitted the Substitution of Commercial Success for Invention | 27 |
| Conclusion | 33 |

APPENDIX

| | |
|---|---|
| A. Constitutional and Statutory Provisions | 1a |
| B. The Specifics of the Various Over-the-Thread Seals Involved | 3a |


## CITATIONS

CASES:


| | |
|---|---|
| Amp Inc. v. Vaco Products Co., 280 F.2d 518 (7th Cir. 1960), *cert. denied*, 364 U.S. 921 (1960) | 28 |
| A R Inc. v. Electro-Voice, Inc., 311 F.2d 508 (7th Cir. 1962) | 16 |

Page

Beatty Safway Scaffold Co. v. Up-Right, Inc., 306 F.2d 626 (9th Cir. 1962), *cert. denied,* 372 U.S. 934 (1963) ..... 19

Castro Convertible Corp. v. Bebry Bedding Corp., 291 F.2d 306 (2d Cir. 1961), *cert. denied,* 368 U.S. 952 (1962) .....20, 28

Cuno Engineering Corp. v. Automatic Devices Corp., 314 U.S. 84 (1941) .....17, 21, 25

Dresser Industries, Inc. v. Smith-Blair, Inc., 322 F.2d 878 (9th Cir. 1963) ..... 16

Edward Miller & Co. v. Bridgeport Brass Co., 104 U.S. 350 (1882) ..... 7

Electric Cable Joint Co. v. Brooklyn Edison Co., 292 U.S. 69 (1934) ..... 16

Graver Tank & Mfg. Co. v. Linde Air Products Co., 339 U.S. 605 (1950) ..... 10

Great Atlantic & Pacific Tea Co. v. Supermarket Equipment Corp., 340 U.S. 147 (1950) .....17, 20, 21, 24, 26, 28

Hotchkiss v. Greenwood, 11 How. 248 (1850) ..16, 17, 20, 21

John Deere Co. v. Graham, 333 F.2d 529 (8th Cir. 1964), *cert. granted,* No. 11, October Term 1965 .. 16

J. R. Clark Co. v. Geuder, Paeschke & Frey Co., 259 F.2d 737 (7th Cir. 1958), *cert. denied,* 359 U.S. 914 (1959) ..... 28

Jungersen v. Ostby & Barton Co., 335 U.S. 560 (1949) 17, 28

Leeds & Catlin Co. v. Victor Talking Maching Co., 213 U.S. 301 (1909) ..... 24

Lincoln Engineering Co. v. Stewart-Warner Corp., 303 U.S. 545 (1938) .....11, 23, 24

Lorenz v. F. W. Woolworth Co., 305 F.2d 102 (2d Cir. 1962) .....18, 29

Norman v. Lawrence, 285 F.2d 505 (2d Cir. 1960) ..20, 28

Radiator Specialty Co. v. Micek, 327 F.2d 554 (9th Cir. 1964), *cert. denied,* 379 U.S. 821 (1964) ..... 19

Reckendorfer v. Faber, 92 U.S. 347 (1876) ..... 25

Reiner v. I. Leon Co., 285 F.2d 501 (2d Cir. 1960), *cert. denied,* 366 U.S. 929 (1961) .....20, 28

Rubber Tip Pencil Co. v. Howard, 20 Wall. 498 (1874) 25

Schriber-Schroth Co. v. Cleveland Trust Co., 305 U.S. 47 (1938) ..... 26

Page

Squeez-A-Purse Corp. v. Stiller, 175 F.Supp. 667 (N.D. Ohio 1959), *aff'd per curiam*, 280 F.2d 424 (6th Cir. 1960), *cert. denied*, 364 U.S. 828 (1960) .....20, 28
The Case of Monopolies, 11 Coke 84b, 77 Eng. Rep. 1260 (Q.B. 1602) ..... 15
Toledo Pressed Steel Co. v. Standard Parts, Inc., 307 U.S. 350 (1939) .....24, 28
United Carbon Co. v. Binney & Smith Co., 317 U.S. 228 (1942) ..... 26
United States v. Aluminum Co. of America, 148 F.2d 416 (2d Cir. 1945) ..... 31
United States v. Line Material Co., 333 U.S. 287 (1948) 15
United States v. Masonite Corp., 316 U.S. 265 (1942) 15

CONSTITUTIONAL PROVISIONS AND STATUTES:

1 Stat. 109 (1790) ..... 15
28 U.S.C. § 1254(1) ..... 1
35 U.S.C. § 1 ..... 14
35 U.S.C. § 132 ..... 15
35 U.S.C. §§ 141-44 ..... 15
35 U.S.C. §§ 145-46 ..... 15
35 U.S.C. § 154 ..... 14
Fed. R. Civ. Proc. 54(b) ..... 10
Patent Code of 1952, 35 U.S.C. §§ 101-103 ....2, 14, 17, 20, 21
Patent Code of 1952, 35 U.S.C. § 282 ..... 16
The Statute of Monopolies, 21 Jac. I, c. 3 (1623) .... 15
U. S. Constitution, Article I, Section 8, Clause 8 ....2, 14, 17, 26

MISCELLANEOUS:

"An Analysis of Patent Litigation Statistics," Staff Report, Subcommittee on Patents, Trademarks and Copyrights, Senate Judiciary Committee, 86th Cong., 2d Sess. (1961) ..... 18

Page

Federico, Commentary on the New Patent Act, 35 U.S.C.A., p. 1 ..... 15

Frank, Marble Palace (1958) ..... 18

Graham v. John Deere Co., No. 11, O.T. 1965, Brief for Respondents ..... 21

Stedman, The U.S. Patent System and Its Current Problems, 42 Texas L. Rev. 450 (1964) .....19, 31

The Story of the U. S. Patent Office (Gov't Printing Office, 4th ed. 1965) ..... 14

U. S. Patent Office, Index of Patents (1963) ..... 14

IN THE

# Supreme Court of the United States

OCTOBER TERM, 1965

---

No. 37

---

CALMAR, INC., *Petitioner,*

v.

COOK CHEMICAL COMPANY, *Respondent.*

---

**On Writ of Certiorari to the United States Court of Appeals for the Eighth Circuit**

---

## BRIEF FOR PETITIONER

---

### OPINIONS BELOW

The opinion of the Court of Appeals is reported at 336 F. 2d 110, and appears at R. 555. The opinion of the District Court for the Western District of Missouri is reported at 220 F. Supp. 414, and appears at R. 17.

### JURISDICTION

The judgment of the Court of Appeals was entered on August 21, 1964 (R. 564). A timely Petition for Rehearing En Banc was denied on October 9, 1964 (R. 577). The petition for a writ of certiorari was filed on December 22, 1964, and was granted on March 29, 1965. The jurisdiction of this Court rests on 28 U.S.C. § 1254(1).

## QUESTION PRESENTED

Respondent's assignor obtained a patent (Scoggin, No. 2,870,943) purporting to cover the combination, with a finger-operated pump-type liquid sprayer, of a cap designed to hold the plunger of the pump down during shipment, and having various specified mechanical details. It is undisputed that the use of the pump-type sprayer, the use of the cap, and the use of the two together were old.

The question presented is: Whether, because of the addition to these old elements of a ring serving as a sort of washer between the cap and the plunger collar, an addition obvious and disclosed by the prior art, the patent in question embodies a patentable "invention" under the Constitution and §§ 101-103 of the Patent Code?

## CONSTITUTIONAL PROVISION AND STATUTES INVOLVED

This case involves Article I, Section 8, Clause 8, of the Constitution, and Sections 101, 102 and 103 of the Patent Code of 1952, 35 U.S.C. §§ 101, 102 and 103. These provisions are set forth in the Appendix, beginning at p. 1a, *infra*.

## STATEMENT OF FACTS

Petitioner is a distributor of finger-operated plastic sprayers for dispensing liquids. (R. 72) Respondent is an insecticide manufacturer which, since 1956, has also been engaged in the manufacture of finger-operated plastic sprayers. (R. 50, 55)

In 1959, U. S. Patent No. 2,870,943 was issued to respondent as assignee of one Baxter I. Scoggin, Jr. (R. 510) Scoggin was Vice President in charge of

production for respondent. (R. 144) The device involved in the patent is shown below:

Scoggin Pat. 2,870,943 Fig. 1

Scoggin Pat. 2,870,943 Fig. 2

(See Ex. 10, R. 510)

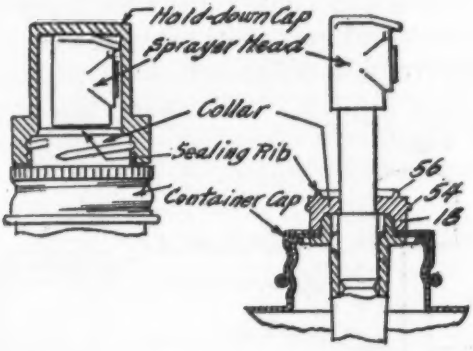


At this time, petitioner was selling its plastic sprayer with hold-down cap, which it had developed in 1958 (R. 75, 77), called the Calmar SS-40. This was sold to the trade, including insecticide manufacturers competing with respondent. (R. 74) Respondent charged that petitioner's SS-40 infringed the Scoggin patent. (R. 2, 3) Petitioner then sued respondent in the District Court for a declaratory judgment that the Scoggin patent was not valid, or was not infringed; respondent counterclaimed for infringement. (R. 1-4)

The Scoggin patent had nothing to do with the pump or plunger of the sprayer[1] itself; it simply related to certain details of the cap to be used over the plunger. (R. 512) Moreover, as the District Court found, it

[1] The sprayer, in fact, shown in Scoggin's patent application, and claimed in combination with his bottle cap, was a sprayer of the kind which had then been sold by petitioner to Scoggin's company for years. (R. 55)

was undisputed that there was nothing new in the idea of applying a screw-threaded cap over a liquid-dispenser plunger to hold it down and provide a protective cover and seal over the dispenser during shipment. (220 F. Supp., at 419; R. 26) An early example of this idea is found in Lohse Patent No. 2,119,884, issued in 1938, which had long since expired when the events in suit occurred (R. 407):

Lohse Pat. 2,119,884
Fig. 1.

Lohse Pat. 2,119,884
Fig. 2.

(See Ex. T, R. 407)

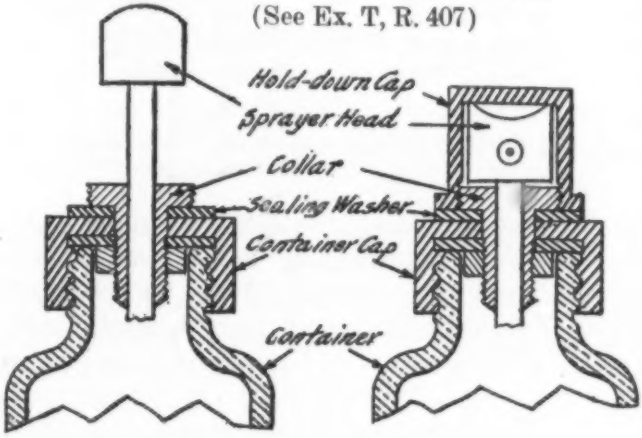


The only difference between the device illustrated in the old Lohse patent, and the device in the Scoggin patent—which was manufactured by respondent from August 1957 until November 1959 as the "Bakan 2" sprayer[2]—is that the Scoggin device effects a seal above the screw threads in the cap, while the Lohse device effects a seal below the screw threads. The idea of the cap, like most bottle caps, is to keep the contents in the

[2] The Bakan 2 sprayer, like petitioner's sprayer, is of the sort sold on liquid tire cleaners, spray starches, insecticides, and the like, in supermarkets and grocery stores.

bottle and not let them leak out. The reason for the seal is to prevent any liquid which might have flowed out of or around the plunger into the overcap, from further flowing out of the overcap. In the Scoggin device, in order to make the seal, a flat surface inside the overcap pressed against the top of the plunger collar.

As originally filed, the Scoggin patent application contained fifteen claims which claimed the entire spray pump and plunger, as well as the overcap, in the broadest of terms. (R. 353-354; 243) It was clear that the whole thrust of the original application was to patent the cap on top of the plunger.[3] After rejection of these original claims, the making of further claims, and their rejection in turn (R. 358-69)—in which twenty-four claims were submitted and rejected or cancelled—Scoggin focused in his revised application claims on the seal in the cap.

Presumably because of the abundant prior art disclosing the idea of including a seal in the cap, Scoggin's finally-revised patent application emphasized the provision of a gap or clearance between the bottom of the overcap and the top of the container cap, so that the seal could be effected when the overcap was screwed on. (R. 251, 370-373)[4] However, the District Court

---

[3] In fact Scoggin admitted that none of his original claims had anything to do with the sealing of the cap. (R. 169)

[4] This had followed upon an interview at the Patent Office, as Scoggin put it, "courteously granted by the Honorable Examiner and the cooperation received in the drafting of allowable claims." (R. 371) As petitioner's expert, former Patent Commissioner Lawrence Kingsland, put it: "I have seen it happen where there is an interview with the Examiner, and the Examiner says, 'Well, I don't see much in it, but I haven't a direct reference.'" (R. 254)

could not accept the proposition that the "invention" could thus consist of a bit of empty space, and held that the introduction of the seal in the overcap above the threads, in combination with the overcap and plunger, was the patentable feature. (220 F. Supp., at 419-20; R. 26-27)[5]

The idea of effecting a seal for fluids above a thread is old as well as obvious. The common garden-hose coupling employs it in the form of a rubber washer; as, for that matter, does the ordinary screw-type bottle cap. The idea was disclosed in a 1952 patent, relating

---

[5] The District Court held that the provision of the gap between the bottom of the overcap and the top of the container cap was "not new or novel" and "not a part of the invention." (220 F. Supp., at 420; R. 27)

Its discussion makes it clear that it viewed the introduction of the seal above the threads, not the gap, as the patentable invention:

> "It is true that Lohse's cap contained threads therein which corresponded to threads on a collar above the container cap, just as there are threads on the collar of the sprayer with which we are concerned here. But the bottom or the skirt of the cap in Lohse forms a seal with a gasket of some substance, apparently leather, which rests on the upper surface of the container cap. There are no seals above the threads and below the sprayer head . . . ."

As to the gap:

> "To me this language [referring to the gap] is descriptive of an element of the patent but not a part of the invention. It is too simple, really, to require much discussion. In this device the hold-down cap was intended to perform two functions—to hold down the sprayer head and to form a solid tight seal between the shoulder and the collar below. In assembling the element it is necessary to provide this space in order to form the seal." (220 F. Supp., at 419, 420; R. 26, 27)

The Court of Appeals' opinion does not identify the invention in specific terms, concluding simply that: "the trial court's finding something new was created worthy of patent protection was proper." (336 F. 2d, at 114; R. 561)

to sprayers for insecticides and other liquids, issued to one Mellon[6] (R. 410):

Mellon Pat. 2,586,687
Fig. 3
(See Ex. U, R. 410)

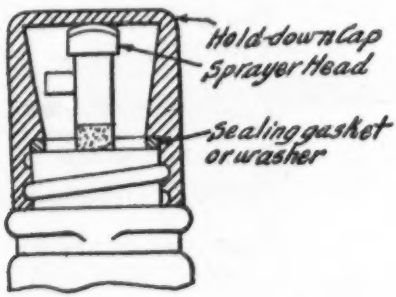


[6] Scoggin was apparently not aware of the Mellon patent until the late stages of the prosecution of his application. (R. 371) Moreover, the Livingstone patents (see p. 8, *infra*) were not even cited in the examination of Scoggin's application. (R. 373) The Livingstone patents disclose not only a seal above the threads, but the provision of a gap between the bottom of the overcap and the top of the container cap to permit the seal to be effected by pressure above the threads before the bottom of the overcap engaged the container cap. (R. 385, 390) It was this feature of the Scoggin application for which the examiner could not find a reference and on the basis of which he presumably permitted the patent to issue. (R. 371-73)

The Livingstone patents did not claim the seal they disclosed, and accordingly under settled doctrine the seal was thereby dedicated to the public—if in fact such a seal, by common use, had not been the public's property for decades or perhaps centuries before. *Edward Miller & Co.* v. *Bridgeport Brass Co.*, 104 U.S. 350, 352 (1882).

We do not mean to suggest that all or any of the prior art patents involved here contained an "invention." The issuance of many of these patents itself is an interesting commentary on the workings of the Patent Office. They are cited here simply as examples of the known "art," if that word is appropriate in a discussion of variations in bottle caps.

Moreover, two patents issued for spout covers to one Livingstone in 1955 and 1956 disclosed this idea; in fact, in a form superior to that exemplified in the Scoggin patent. (R. 385, 390) We illustrate one:

Livingstone Pat. 2,715,480
Cap of Fig. 8
(See Ex. H, R. 385)

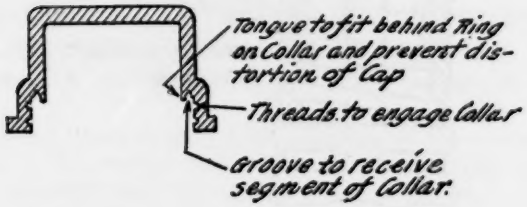


Petitioner's SS-40 used a different type of seal joint from that disclosed in the Scoggin patent and used in respondent's Bakan 2. Petitioner's seal joint (similar to Livingstone's) used a tongue and groove, like that used in wood flooring. This seal joint inhibited the tendency to distortion and leakage present in the simple contact seal illustrated in the Scoggin patent.[7] More important, petitioner's SS-40 had internal pump seals which prevented the liquid from getting out of, or around, the plunger into the overcap. (R. 305-07) Less than a year after the introduction of petitioner's SS-40, publicly admitting the imperfections of the seal of the Scoggin patent,[8] respondent modified its "Bakan 2"

---

[7] In a later patent application, Scoggin admitted the distortion caused by the very seal which he had patented. (R. 507)

[8] "This new cover cap is designed so that it makes a perfect seal on the collar—which the old one would not do." Cook letter to the trade, R. 341.

to make the overcap seal conform generally to the earlier marketed Calmar SS-40[9] (R. 341):

Calmar SS-40
(See Ex. QQ, R. 475)

Bakan 2—Modified
(See Ex. 90, R. 517)

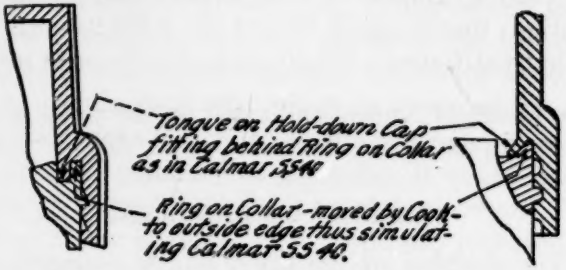


In the District Court, respondent stressed, in support of the validity of the Scoggin patent, the so-called "commercial success" that had attended respondent's production of the Bakan 2 sprayer. The primary evidence adduced on the subject of commercial success was the fact that respondent sold "millions" of the devices.[10] It was, however, undisputed on the record that respondent's sales the first year it introduced the device did not increase over and above those in the year before it introduced the device and may, in fact, have declined.[11] (R. 62)

---

[9] This modification (the "Bakan 2 Modified") was on the market in November, 1959. (R. 341) By mid-1960, respondent had also introduced a new model, the Bakan 3, with internal pump seals which, like petitioner's SS-40 introduced over a year before, prevented the toxic contents of the bottle from flowing into the overcap. (R. 157)

We trace the development of the seals involved in Appendix B.

[10] Including, of course, mounting it on its own insecticides, the respondent being a manufacturer of insecticides.

[11] For that matter, respondent sold in excess of 50 million of the old type sprayer which hung on the side of the container without overcap. (R. 64)

The District Court, citing the "evidence" of "commercial success" of Scoggin's patent (220 F. Supp., at 420; R. 28), held that the "combination of the admittedly old and known elements employed by Scoggin" (220 F. Supp., at 419; R. 25) was a patentable invention; that Scoggin Patent No. 2,870,943 was valid; and that petitioner's SS-40 sprayer infringed it.[12]

The Court of Appeals affirmed on the same grounds. (336 F. 2d, at 113-14, 115; R. 560-61, 563)

## SUMMARY OF ARGUMENT

I. The decision of the lower courts countenances a debasement of the constitutional standard of invention. The Constitution and the governing statute restrict the grant of the patent monopoly to "inventions" or "discoveries." The decisions of this Court for over a century have insisted upon the requirement of an "invention" or "discovery" as a necessary prerequisite to the validity of a patent grant.

The device involved in this case is a vivid example of the sort of trivial gadget, containing nothing smacking of invention, which the Patent Office on occasion

---

[12] The District Court reserved jurisdiction with respect to the amount of damages to be awarded respondent for the infringement; and certified, under Fed. R. Civ. Proc. 54(b), that there was no reason for delay in entering judgment on the issues of validity and infringement, and directed entry of judgment thereon. (R. 37-38) It was only through an extravagant application of the "doctrine of equivalents" of *Graver Tank & Mfg. Co.* v. *Linde Air Products Co.*, 339 U.S. 605 (1950), that the courts below found infringement. As noted, the feature in the Scoggin application found patentable was the seal, and petitioner's device employed an entirely different kind of seal—a "tongue and groove" seal—from the admittedly imperfect pressure-type seal employed by Scoggin. However, in this Court we are simply attacking the validity of the Scoggin patent.

persists in allowing to be patented despite the repeated admonitions of this Court. The so-called "invention" involved here—which was not even focused on in the original patent application — consisted of taking a plunger cap which had been fully disclosed in a twenty-year old expired patent and changing the location of the cap seal to a location in turn taught in an existing patent, and in fact one which is common in every-day applications. Regardless of the precise articulation given the standard of invention, it would be a perversion of language, as well as of law, to call the reshuffling of the elements of a bottle cap involved here, an "invention" or a "discovery."

II. The patent in question here is a combination patent—one covering the bringing together or combining of old elements into a presumably new device. But in the first place, the patent at bar does not even amount to a really new combination, since individual prior patents disclose the combination of the basic elements involved in it. At most, it amounted to a rearrangement combining a particular specific location for the cap seal—a location itself old—with other old elements.

Moreover, the question of validity of a combination patent presents in a particularly acute form the fundamental test that there be an "invention" or "discovery." The decisions of this Court have repeatedly enunciated, as a specific application of the general requirement of "invention", in the context of these combination patents, that: "The mere aggregation of a number of old parts or elements which, in the aggregation, perform or produce no new or different function than that theretofore performed or produced by them, is not patentable invention." *Lincoln Engineering Co.* v. *Stewart-Warner Corp.*, 303 U.S. 545,

549 (1938). The Scoggin patent is a vivid example of a device that simply combines old parts or elements which in the aggregate do not perform or produce any new or different function or operation from what they perform separately. The feature on which it is now sought to justify the patent—the location of the fluid seal above the screw threads—simply performs what a fluid seal has always performed—it keeps the fluid from flowing over the screw threads and out of the cap. As such it was not patentable.

Patenting a combination of the character involved in the Scoggin patent perverts the patent system by making that system a device to subtract from what is available to the public rather than to add to it. One of the fundamental principles and purposes of the patent system is that the public is to have the right freely to use and, generally, to rearrange, elements taught in old and expired patents, or in patents where the element in question is not claimed. But by countenancing the patenting of the rearrangement of the old elements involved here, the lower courts permitted Scoggin to make a subtraction, in favor of private monopoly, from the public domain.

III. The lower courts here, in effect, permitted the substitution of "commercial success" — and a very attenuated form of it at that — for the basic constitutional requirement of invention. The decisions of this Court have always set their face against this and for good reason.

First, the application of a rule giving serious weight to "commercial success" alters the basis of the grant of the patent monopoly from invention to such factors as sales promotion ability, manufacturing technique,

ready access to markets, consumer-appeal design factors, and advertising budget. The function of these factors in our economy is not to give their possessor a legally-protected monopoly, but to give him a tool with which to wage a *competitive* struggle. It is only *invention* which the patent laws reward with the patent monopoly, and that is all the Constitution permits. Invention, not commercial innovation, has historically been the touchstone of the patent laws.

Second, the introduction of "commercial success" as a decisive factor on the issue of patent validity would improperly and unduly increase the anticompetitive factors already inherent in the operation of the patent system. In a regime in which in fact a great number of patents are issued on devices which contain no invention, any rule which inhibits private diligence and daring in challenging those patents, by increasing the hazard of predicting whether an issued patent is valid or void, tends to put an extra aura of validity around invalid patents. Instead of the classic comparison of the issued patent with the published prior art, the potential competitor of the patentee, in making his judgment as to validity, would be forced into speculation as to matters which were within the private knowledge of the patentee or which might still lie in the future. These considerations, and the growing tendency of the lower courts to deviate from the accepted rule that commercial success is not decisive, indicate that the Court should reiterate that settled rule and strike down the departure from it implicit in the decision below.

## ARGUMENT

### I. THE DECISION OF THE COURTS BELOW COUNTENANCES A DEBASEMENT OF THE CONSTITUTIONAL STANDARD OF INVENTION

The Patent Office currently grants about fifty thousand patents on the average per year.[13] The patent at bar is one of the 52,470 patents[14] it granted in 1959.

The Patent Office's authority to grant patents—which, once granted, if valid, confer upon the patentee or his assigns the right, for seventeen years, "to exclude others from making, using, or selling" the patented device throughout the United States, 35 U.S.C. § 154—comes from the Patent Code, 35 U.S.C. § 1 *et seq.* The central provision of the Patent Code is Section 101 which states that: "Whoever invents or discovers any new and useful process, machine, manufacture, or composition of matter, or any new or useful improvement thereof, may obtain a patent therefor . . ."

Congress' power to provide for these private monopolies in respect of "inventions" or "discoveries" in turn comes from an express and specific provision of the Constitution to the effect that: "The Congress shall have Power . . . To promote the Progress of Science and useful Arts, by securing for limited Times to Authors and Inventors the exclusive Right to their respective Writings and Discoveries . . ." (Art. I, § 8, Cl. 8)—The constitutional provision thus restricts the "exclusive rights" which may be granted (apart

---

[13] U. S. Patent Office, Index of Patents (1963), p. 1123.

[14] "The Story of the U. S. Patent Office" (Gov't Printing Office, 4th ed. 1965), p. 36.

from those which relate to copyright protection) to persons who are "inventors," and then only in respect of their "discoveries."[15] The constitutional provision was, of course, written in the late Eighteenth Century against the backdrop of the practices of the English Crown in the indiscriminate granting of exclusive privileges to private persons.[16] At the present time, the patent laws must be harmonized with the basic provisions for free competition contained in the federal antitrust laws.[17]

The decisions of this Court lay considerable stress upon the constitutional requirement of an "invention" or "discovery" as a prerequisite for patentability.

---

[15] The first Patent Act passed under the Constitution was enacted by the First Congress on April 10, 1790. (c. 7, 1 Stat. 109) This Act placed the jurisdiction to issue patents in a three-man board consisting of the Secretary of State, the Attorney General, and the Secretary of War. "The leader of the group was the Secretary of State, Thomas Jefferson, who was personally deeply interested in the subject matter of patent law." Federico, Commentary on the New Patent Act, 35 U.S.C.A., pp. 1, 3-4. From these beginnings at which the issuance of patents was located at the high executive levels of government, the patent-granting function has evolved to an extensive administrative institutionalization in the Patent Office. Various reexaminations (35 U.S.C. § 132), administrative appeals (*Id.*, § 134) and *ex parte* judicial appeals to the Court of Customs and Patent Appeals (*Id.*, §§ 141-44) or by way of civil actions in the District Court (*Id.*, §§ 145-46), afford remedies to the applicant who feels he has been improperly denied a patent, but no administrative appeals are provided from decisions granting patents, such as by permitting an interested competitor to contest the grant.

[16] See *United States* v. *Line Material Co.*, 333 U.S. 287, 329-30, 337-38 (1948) (dissenting opinion). *Cf., e. g., The Case of Monopolies*, 11 Coke 84b, 77 Eng. Rep. 1260 (Q.B. 1602); The Statute of Monopolies, 21 Jac. I, c. 3 (1623).

[17] See, *e.g., United States* v. *Masonite Corp.*, 316 U.S. 265 (1942).

While the burden of proof has always been imposed upon him,[18] it has long been open to the defendant in a patent infringement suit to show that the patent of which he has been charged with infringement does not present an "invention" or "discovery" and accordingly is not valid. See *Hotchkiss* v. *Greenwood,* 11 How. 248 (1850). This is because "the public is a silent but an important and interested party in all patent litigation, and is entitled to protection against the monopolization of what is not lawfully patentable." *John Deere Co.* v. *Graham,* 333 F. 2d 529, 535 (8th Cir. 1964), *cert. granted,* No. 11, October Term 1965.

This Court has historically been most careful to enforce the requirement that a basic prerequisite for a valid patent is the presence of an "invention" or "discovery." Thus, in *Electric Cable Joint Co.* v. *Brooklyn Edison Co.,* 292 U.S. 69, 79 (1934), it was stressed that what was required for patentability was "invention, not the mere exercise of the skill of the

---

[18] This burden is now codified in § 282 of the Patent Code: "A patent shall be presumed valid. The burden of establishing invalidity of a patent shall rest on a party asserting it. . . ."

Any substantive effect the "presumption" might have was, under familiar doctrine, removed by the citation of material prior art not considered by the Patent Office—such as the Livingstone patents which disclosed the very feature which the patent examiner obviously considered made the Scoggin device patentable. See *A R Inc.* v. *Electro-Voice, Inc.,* 311 F. 2d 508, 512-13 (7th Cir. 1962); *Dresser Industries, Inc.* v. *Smith-Blair, Inc.,* 322 F. 2d 878, 888 (9th Cir. 1963). Moreover, any substantive effect of the presumption is removed by the fact that the examiner obviously thought that the "invention" involved in the Scoggin application was the provision of the gap at the bottom of the cap—which the courts below held "not a part of the invention" and "not new or novel." (R. 27)

calling."[19] In *Cuno Engineering Corp.* v. *Automatic Devices Corp.*, 314 U.S. 84 (1941), the Court observed that the statute required (as it still does, 35 U.S.C. § 101) that "the device must not only be 'new and useful,' it must also be an 'invention' or 'discovery.' " (*Id.*, at 90)

Enunciating the standard involved and stressing its derivation from the Constitution, this Court has declared that the patentee's "skill in making [his] contribution" must reach "the level of inventive genius which the Constitution, Art. I, § 8, authorizes Congress to reward." (*Id.*, at 91) In *Jungersen* v. *Ostby & Barton Co.*, 335 U.S. 560, 566 (1949), the Court reiterated that the standard of patentability is "inventive genius." In its most recent decision in the field, *Great Atlantic & Pacific Tea Co.* v. *Supermarket Equipment Corp.*, 340 U.S. 147, 150 (1950), the Court once again stressed the requirement for "invention."

---

[19] This point is an old one and was first made in the leading "doorknob" case of *Hotchkiss* v. *Greenwood*, 11 How. 248, 267 (1850), where it was stated in very similar language. The basic positions as to invention which have persisted ever since were formed even then: The dissenting Justice, whose position was rejected by the Court in *Hotchkiss*, and ever since, declared that it was enough that the doorknob was "new, and better and cheaper than what preceded it." 11 How., at 268. As noted above, § 101 declares that only whoever "*invents* or *discovers* any new and useful process, machine, manufacture, or composition of matter..." may obtain a patent therefor. (Emphasis supplied) Moreover, § 103 of the Code reiterates the fact that what is required is "invention, not the mere exercise of the skill of the calling" by declaring that a patent may not be obtained "if the differences between the subject matter sought to be patented and the prior art such that the subject matter as a whole would have been obvious at the time the invention was made to a person having ordinary skill in the art to which said subject matter pertains."

One may legitimately entertain serious doubts as to whether, despite the undeniable talents of the American people and the *ex parte* grant of patents by the Patent Office, there are in fact 50,000 inventions made in the United States every year. There have been judicial expressions of skepticism in this respect. A panel of the Court of Appeals for the Second Circuit once dryly commented: "Since 1950, eighteen patents on different variations of hardware for use in reclining chairs with movable leg-rests have been issued. Obviously there have not been eighteen 'inventions' in this narrow area in the last twelve years." *Lorenz* v. *F. W. Woolworth Co.*, 305 F. 2d 102, 105 n. 6 (2d Cir. 1962).

To put it more frankly, the predilection of the Patent Office for issuing patents on devices which are not inventions has been notorious and been the subject of comment by Committees of Congress.[20] The record in this case vividly illustrates the practice it follows in granting a patent if there is any detail, however trivial, not explicitly and completely covered by the prior art. For here the seal of the overcap—which was not even claimed as an invention originally by Scoggin—after the lengthy *ex parte* proceedings in the Patent Office finally emerged as the basis for the grant of the patent. As a commentator has put it: "The situation is aggravated, however, by still other factors. The most serious of these is the *ex parte* nature of the proceedings [before the Patent Office], as a result of which only the examiner's sense of public duty and conscientiousness stand in the way of granting the

[20] See "An Analysis of Patent Litigation Statistics," Staff Report, Subcommittee on Patents, Trademarks and Copyrights, Senate Judiciary Committee, 86th Cong., 2d Sess. (1961), *passim*. See, in particular, the other studies referred to at page 1 of the Staff Report. See also Frank, *Marble Palace* (1958), pp. 24-27, 288.

applicant's request for a patent . . . . The whole thrust of the administrative process in the Patent Office pushes the examiner in the direction of allowing, rather than disallowing, applications." Stedman, *The U. S. Patent System and Its Current Problems,* 42 Texas L. Rev. 450, 476 (1964).

Thus, the exercise of "inventive genius" which the Patent Office finally found in this case consisted of taking a plunger cap which had been fully disclosed in a twenty-year old expired patent (Lohse), and changing the location of the cap seal—to a location in turn taught in a seven-year old patent (Mellon). The technique of the seal was, at the very most, as sophisticated as the common washer, and is old in the art. The patented bottle cap itself—nine examples of which we have lodged with the Clerk—is the strongest witness of the lack of invention in the patent at bar.

While quite likely this case represents the nadir of the issuance by the Patent Office of patents on non-inventions—at least of those which have survived attack through a Court of Appeals—it is hardly an isolated example. The same practice of patenting rearrangements and refinements in petty gadgets has led the Patent Office to patent—and appallingly enough the Courts of Appeals to uphold—a panoply of assorted trivialities in recent years, including insignificant refinements in the art of toilet flushing;[21] vegetable chopping;[22] the hinging of scaffolding;[23]

---

[21] *Radiator Specialty Co.* v. *Micek,* 327 F. 2d 554 (9th Cir. 1964), *cert. denied,* 379 U.S. 821 (1964).

[22] *Zysset* v. *Popeil Bros., Inc.,* 276 F. 2d 354 (7th Cir. 1960), *cert. denied,* 364 U.S. 827 (1960), 318 F. 2d 701 (7th Cir. 1963), *cert. denied,* 376 U.S. 913 (1964).

[23] *Beatty Safway Scaffold Co.* v. *Up-Right, Inc.,* 306 F. 2d 626 (9th Cir. 1962), *cert. denied,* 372 U.S. 934 (1963).

the production of ottomans convertible into beds;[24] and the construction of such evidences of man's unfolding knowledge of the physical world about him as metal hair curl clips,[25] rubber earring pads,[26] and rubber coin purses.[27]

Extended discussion is scarcely required to establish that the patent in suit does not push back the frontiers of physics or of mechanics. It is a simple tinker's rearrangement on which the Patent Office has magnanimously bestowed the seventeen-year monopoly which the Constitution and Congress have reserved to inventions.—There has been controversy in the Courts of Appeals as to whether the passage of the 1952 Patent Code was meant to relax the standard of invention taught by this Court's decisions. While we contend that Congress had no such intention—indeed nothing in the text of the Code gives expression to such an intention[28]—we shall not attempt to expand upon the

---

[24] *Castro Convertible Corp.* v. *Bebry Bedding Corp.*, 291 F. 2d 306 (2d Cir. 1961), *cert. denied*, 368 U.S. 952 (1962).

[25] *Reiner* v. *I. Leon Co.*, 285 F. 2d (2d Cir. 1960), *cert. denied*, 366 U.S. 929 (1961).

[26] *Norman* v. *Lawrence*, 285 F. 2d 505 (2d Cir. 1960).

[27] *Squeez-A-Purse Corp.* v. *Stiller*, 280 F. 2d 424 (6th Cir. 1960), *cert. denied*, 364 U.S. 828 (1960).

[28] Section 101, as noted, contains the requirement that the "new and useful" device be the product of an invention. No provision of the Code expressly purports to define what an "invention" is, so *prima facie* the test is as set forth in the preexisting judicial decisions. Or, if § 103 is read as providing a definition of an invention through the rather oblique method of setting forth a description of what is not an invention, the fact remains that it is itself a paraphrase of language that has been used in the whole line of cases of this Court on the subject beginning with the *Hotchkiss* case in 1850 through the *Supermarket Equipment* case in 1950.

excellent treatment of the matter by the respondents in No. 11, *Graham* v. *John Deere Co.*, which is to be argued preceding this case.[29] The short of the matter is that regardless of what standard of invention is applied, it is simply a perversion of language, as well as of law, to call the reshuffling of the elements of a bottle cap involved here an "invention" or a "discovery." It is impossible to imagine what sort of gadget could not be patented under whatever standard was applied in the court below, if the decision below were left unreversed. When the respondent contends that the Court below applied the higher of two

---

[29] See pp. 47-71, Brief on behalf of Respondents, No. 11, *Graham* v. *John Deere Co.* As that brief points out, the contemporary legislative history of the 1952 Patent Code indicates that the Code was not intended to change the judicial standard of invention, with the exception of the last sentence of § 103 which was meant to prevent an extravagant interpretation which certain sources evidently were putting on a phrase in the opinion of the Court in *Cuno Engineering Corp.* v. *Automatic Devices Corp.*, 314 U.S. 84, 89 (1941). Afterwards, certain intimations appeared in the writings of commentators and in certain of the decisions of the courts to the contrary effect. To a large extent this argument depended upon the creation of a myth that sometime in the last few decades before the *Supermarket Equipment* case in 1950, the Supreme Court began to take an approach to the question of patent validity which it had not taken before. But as the respondent in the *Graham* case points out (Brief, pp. 48-54) the approach of the early cases is identical with that of the latter. In fact, as we have pointed out above (n. 19, p. 17, *supra*), the *Hotchkiss* case in 1850 exposes the basic issues and answers them in the way the Court has answered them ever since. Despite the dissent's urging, the Court there held that it was not enough that the device simply was "new, and better and cheaper than what preceded it." (11 How., at 268) The fallacy of the *Hotchkiss* dissent has died hard but this Court has uniformly held that the test is not innovation but invention; the patentable device is one which contains the work of the "inventor," not simply that of the "skillful mechanic." (*Id.*, at 267)

standards (Br. in Op., p. 12), the thought of what sort of devices might be monopolized if a lower standard could be enunciated staggers the imagination.

### II. THE SCOGGIN PATENT FALLS VASTLY SHORT OF MEETING THE APPLICATION OF THE STANDARD OF INVENTION CONSISTENTLY DEMANDED OF A VALID MECHANICAL COMBINATION PATENT

The Scoggin patent at bar is what is known in the language of patent law as a combination patent—a bringing together or combining of old elements into a presumably new device. While combination patents have from time to time been sustained by the decisions of this Court, their issuance by the Patent Office presents the courts, in a particularly acute form, with the fundamental problem of finding an "invention" or a "discovery" as a prerequisite to a valid patent. Accordingly, the decisions of this Court have repeatedly enunciated certain specific applications of the general requirement of "invention" applicable to combination patents; and these were disregarded by the courts below.

It should first be noted that the Scoggin patent did not even introduce a really new combination of elements. The basic elements involved—the plunger pump, the overcap screwing onto a collar above the container cap, and a fluid seal—were all brought into combination in the Lohse patent. In fact, the device produced commercially under the Lohse patent—which provided a seal below the threads attaching the overcap to the collar—produced a satisfactory leakproof assembly. (R. 286) Scoggin's "combination" was, rather, in an even more minor key. He simply rearranged the elements already combined in the Lohse patent by relocating the seal above the threads rather than below; or, put another way, he combined with the pump and overcap a simple pressure seal—like

that in a garden-hose coupling—located above the screw threads.

It is indisputable that the spray plunger and hold-down overcap shown in the Scoggin patent were old. Likewise the idea of a pressure seal for fluids above a screw thread to prevent leakage over the threads is old. In Scoggin's rearrangement they did no more than what they did separately.[30]—Put differently, Scoggin's cap housed and sealed a sprayer pump; Mellon's and Livingstone's caps housed and sealed, in the same fashion, a sprayer pump and a pouring spout. Regardless of the application, the function of the elements was the same.

The Court declared in *Lincoln Engineering Co.* v. *Stewart-Warner Corp.*, 303 U.S. 545, 549 (1938), that: "The mere aggregation of a number of old parts or elements which, in the aggregation, perform or produce no new or different function or operation than that theretofore performed or produced by them, is not patentable invention." Or as the Court put it in its last patent validity case: "The conjunction or concert of

[30] As a matter of fact, the particular form of the elements which Scoggin combined performed their functions rather badly in the combination. This was because the sprayer and overcap assembly, as a practical matter, were to be made of plastic, and the simple pressure seal used by Scoggin in the combination—while adequate in such applications as a garden-hose coupling or in a metal to glass-bottle cap connection—tended to be inadequate where plastics were concerned. In this context, the pressure seal caused distortion of the elements, admitted by Scoggin (R. 507), which permitted leaking of the toxic fluids out of the cap. Thus, it was not long before respondent had to bring out its improved Bakan 2 Modified model, adopting the seal used by petitioner (R. 341), and before Scoggin himself filed a further patent application (R. 496) in which he admitted that existing devices (presumably his own) were prone to leak (R. 497), and that what was needed was a device which prevented leakage into the cap (R. 497)—that is, the internal pump seals already found on petitioner's SS-40.

known elements must contribute something; only when the whole in some way exceeds the sum of its parts is the accumulation of old devices patentable. Elements may, of course, especially in chemistry or electronics, take on some new quality or function from being brought into concert, but this is not a usual result of uniting elements old in mechanics." *Great Atlantic & Pacific Tea Co.* v. *Supermarket Equipment Corp., supra,* at 152.

Here, as in the *Supermarket Equipment* case, the "old elements which made up this device" did not "perform any additional or different function in the combination than they perform out of it." (*Ibid.*) The elements "performed no joint function. Each served as separately it had done." *Toledo Pressed Steel Co.* v. *Standard Parts, Inc.,* 307 U.S. 350, 356 (1939). The short of the matter is that the seal above the threads—which is the rearranged element brought into the combination—did not in the combination perform any function other than that historically performed by a pressure seal. Contrast *Leeds & Catlin Co.* v. *Victor Talking Machine Co.,* 213 U.S. 301, 325 (1909); *Lincoln Engineering Co.* v. *Stewart Warner Corp., supra,* at 551-52.

Once again, it must be underscored that the contention—apparently accepted by the courts below[31]—that the result of the Scoggin device was new and useful simply misses the point. As the Court declared as to another mechanical combination patent in *Cuno Engi-*

[31] As we have noted, the Scoggin device was "new" only in that it was the first commercial use in quantity of an in-place sprayer with a hold-down cap on insecticides. Lohse's device, which included such a sprayer and hold-down cap, was successfully marketed commercially in other fluid dispensing applications. (R. 287-88) How "useful" the Scoggin device was in the light of its faulty seal is problematical. See pp. 8-9, and n. 8, p. 8, *supra.*

*neering Corp.* v. *Automatic Devices Corp., supra,* at 90: "We may concede that the functions performed by . . . [the patentee's] combination were new and useful. But that does not necessarily make the device patentable. Under the statute . . . the device must not only be 'new and useful,' it must also be an 'invention' or 'discovery.'" As this Court declared almost ninety years ago: "Perfection of workmanship, however much it may increase the convenience, extend the use, or diminish expense, is not patentable." *Reckendorfer* v. *Faber,* 92 U.S. 347, 356-57 (1876). The introduction by Scoggin of the old idea of a pressure-type seal above the threads of the overcap in the very narrow and specific application involved here might perhaps be contended to be a new application of an old device;[32] but even "a new application of an old device may not be patented if the "result claimed as new is the same in character as the original result' . . . even though the new result had not before been contemplated." *Cuno Engineering Corp.* v. *Automatic Devices Corp., supra,* at 91.[33]

---

[32] But see the pressure-type seal above the cap threads in the Mellon patent, p. 7, *supra.*

[33] Thus, the Nineteenth Century patentees who first had the ideas of, respectively, fitting a detachable rubber eraser on, and fitting a sharpenable rubber eraser into the back end of a lead pencil, certainly had good, novel, and useful ideas—ideas which, we may venture, at their time were of much greater novelty and utility than anything involved in Scoggin's rearrangement. Yet the Court held both their patents invalid. *Rubber Tip Pencil Co.* v. *Howard,* 20 Wall. 498 (1874); *Reckendorfer* v. *Faber,* 92 U.S. 347 (1876).—The *Faber* case is, of course, one of the classic cases on the standard for mechanical combination patents and is an illustrative example of the early adoption of the Court's consistent principle that the rearrangement of old elements, without change in their separate functions, however useful the result, is not patentable.

The reason why this Court has from such an early date carefully scrutinized mechanical combination patents is plain. The purpose of the grant of the patent monopoly is specified in the Constitution: "To promote the Progress of Science and useful Arts." (Art. I, § 8, Cl. 8) The price the patentee pays for a monopoly is the disclosure of his invention to the public—the addition to the fund of public knowledge of his "discovery" in the field of "Science and useful Arts." Thus after the patent has expired the public, instructed in it, may freely practice the discovery it teaches.[34]

To sanction the granting of patents on rearrangements of old mechanical elements perverts the patent system by making it a device to subtract from what is available to the public rather than to add to it. The purpose of the disclosure required under the patent system is to permit the public freely to use the disclosures after the term of the patent. But, if further patents are granted to those simply rearranging old elements already in the public domain, the public is deprived of what belongs to it. For the idea of the system is that the public is to be free to rearrange those elements. As Mr. Justice Jackson eloquently put it for the Court in *Great Atlantic & Pacific Tea Co.* v. *Supermarket Equipment Corp., supra,* at 152: "The function of a patent is to add to the sum of useful knowledge. Patents cannot be sustained when, on the contrary, their effect is to subtract from former resources freely available to skilled artisans. A patent

[34] Accordingly, for example, a patent granted on an application which does not adequately teach the invention it embraces is void, since it does not fulfill the function of making an addition to the fund of public knowledge. *United Carbon Co.* v. *Binney & Smith Co.*, 317 U.S. 228 (1942); *Schriber-Schroth Co.* v. *Cleveland Trust Co.*, 305 U.S. 47 (1938).

for a combination which only unites old elements with no change in their respective functions, such as is presented here, obviously withdraws what is already known into the field of its monopoly and diminishes the resources available to skillful men. This patentee has added nothing to the total stock of knowledge, but has merely brought together segments of prior art and claims them in congregation as a monopoly."

### III. THE COURTS BELOW ERRONEOUSLY PERMITTED THE SUBSTITUTION OF COMMERCIAL SUCCESS FOR INVENTION

On analysis, it is impossible to find any real basis for the decision below other than the "commercial success" of respondent's sprayer conceived to exist by the lower courts.—Nothing more appears to be meant by the references to "commercial success" by the courts below than the fact that respondent was the first to mass-market liquid insecticides with an in-place plastic sprayer and overcap.[35] This substitution of the "com-

---

[35] As noted previously (p. 9, *supra*), the District Court made this finding on the basis of the fact that respondent disposed of "millions" of the devices. But Calmar likewise sold millions of the old-type sprayer, which was hung at the side of the bottle, after the introduction of the Bakan sprayers, or for that matter after the introduction of Calmar's own in-place sprayers. (R. 185) And it is undisputed on the record that the respondent's sales the first year it introduced the device did not increase and in fact may have declined—an odd form of "commercial success." (R. 62)

The record is also clear that the device produced under the Scoggin patent, the Bakan 2 sprayer, was primarily developed for use on respondent's own insecticides, not for sale to other consumer-spray fluid manufacturers. (R. 153) It was not until the next year after respondent introduced its sprayer cap that it began to sell it to other concerns. (R. 153) Not long thereafter respondent was forced to bring out the improved Bakan 2 Modified model adopting the form of seal used earlier by petitioner (R. 341) and, still earlier, by Livingstone's licensee. (R. 294)

The only other evidence of commercial success was the testimony of an executive of a liquid window cleaner concern. He testified

mercial success" of the sprayer for the presence of an invention in the bottle cap shown in the patent finds a reflection in the reasoning of an ominously growing number of recent decisions of the lower federal courts permitting the patenting of trivial mechanical devices.[36]

Once again, the decisions of this Court have warned against this trend. This Court has declared that: "Commercial success without invention will not make patentability." *Great Atlantic & Pacific Tea Co.* v. *Supermarket Equipment Corp., supra,* at 153. It has characterized "commercial success" as necessarily a "makeweight." *Jungerson* v. *Ostby & Barton Co.,* 335 U.S. 560, 567 (1949). See also *Toledo Pressed Steel Co.* v. *Standard Parts, Inc., supra,* at 356-57. And in words strikingly applicable to the present situation, the Court of Appeals for the Second Circuit has declared that: "In cases of patents on devices improving an existing product, there is every reason to severely limit the weight attributed to commercial

---

that his product's sales increased substantially after he began using the Bakan 3 device. But previously, he had furnished no sprayer whatever with his product, though its label's instruction "Spray on" had blithely invited the housewife to make bricks without straw. Moreover, it should be remembered, the Bakan 3 device was respondent's ultimate model, which followed the features of petitioner's SS-40 and not the device disclosed in the Scoggin patent, which was confessedly imperfect. (R. 109, 157, 341, 514, 515)

[36] See *Castro Convertible Corp.* v. *Bebry Bedding Corp., supra,* 291 F. 2d, at 307-08; *Reiner* v. *I. Leon Co., supra,* 285 F. 2d, at 503-04; *Norman* v. *Lawrence, supra,* 285 F. 2d, at 506; *Squeez-A-Purse Corp.* v. *Stiller,* 175 F. Supp. 667, 669 (N.D. Ohio 1959), *aff'd per curiam,* 280 F. 2d 424, *supra; Amp Inc.* v. *Vaco Products Co.,* 280 F. 2d 518, 519 (7th Cir. 1960), *cert. denied,* 364 U.S. 921 (1960); *J. R. Clark Co.* v. *Geuder, Paeschke & Frey Co.,* 259 F. 2d 737, 738 (7th Cir. 1958), *cert. denied,* 359 U.S. 914 (1959).

success. The distinction between a mere improvement and an invention is well known in the law of patents, and incorporation of a device by manufacturers can be explained solely by the former." *Lorenz* v. *F. W. Woolworth Co., supra,* at 104, n. 4.[37]

1. The primary reason for this rule about so-called "commercial success" is evident. Any relaxation of the rule would not only tend to ignore invention—the only constitutional basis for the patent monopoly—but to introduce the most virulent anticompetitive features into the patent system and to destroy the delicate balance which must be maintained between that system and the basic federal policy of free competition implicit in the antitrust laws.

This is because—particularly in the area of mass-marketed consumer goods, like those involved here—

---

[37] The District Court so far forgot the classical approach of comparing the patent with the prior art, focusing instead on the march of commercial gadgetry, as to say of the Scoggin patent: "Although hold-down caps had been used for many years, their use on the sprayer was for a special and limited purpose. It was employed in a narrow art, one pertaining primarily to the sealing, shipping and use of insecticides by means of liquefying sprayers." (220 F. Supp., at 421; R. 29) — But Scoggin's patent claims do not specifically relate to the use of the cap with insecticides or any particular liquids.

The opinion of the Court of Appeals also vividly indicates the abandonment of the classic test of comparison of the device taught by the patent with the prior art, in favor of a review of the alleged "commercial success" of the device produced under the patent. The nearest the Court of Appeals came to describing the "invention" was its quotation of a description by the respondent's expert of the commercial use of the invention (336 F. 2d, at 113; R. 559) and the court's reference to the invention as being: "This novel 'marriage' of the sprayer with the insecticide container. . . ." (336 F. 2d, at 113; R. 560), this description likewise being in terms purely of the marketing of commercial gadgets.

the "commercial success" test puts a premium not on invention but on such factors as sales promotion ability, manufacturing technique,[38] ready access to markets, consumer appeal design factors,[39] and advertising budget. These factors may be legitimate tools in the competitive struggle but they are no basis for the grant of a private monopoly.

Thus the approach apparently adopted in the court below favors the vertically integrated operator—like respondent, with a ready captive market for the pump "as a sales promotion gimmick" (R. 51) in its insecticide manufacturing operations; it favors the corporate technician, with immediate commercial outlet for his developments,[40] over the independent inventor; it favors the protection of gadgets with immediate commercial application over the performance of basic research. It tends to create a monopoly on the basis of promotional success or distributional advantage.

---

[38] For example, one of the points disclosed in the present record was that a hold-down sprayer, developed by Calmar before the Bakan 2 appeared, ran into difficulties because of certain technical assembly problems caused by the humid atmosphere in Puerto Rico where the assembly was being effected at the time. (R. 74-75)

[39] One of the attractive features of the Bakan 2 device used on respondent's insecticides was that the relatively flat top of the overcap furnished a convenient place for the supermarket to stamp the price. (R. 306) Respondent's president in fact testified that this and appearance factors were among the basic reasons for design of the Bakan 2. (R. 60; see also R. 81)

[40] Scoggin was an officer—Vice President in charge of production—of the respondent corporation. (R. 144)

To say that a corporation which first successfully mass-markets a device having some novelty[41] or innovation in it is to have a seventeen-year monopoly of that product is to renounce the original intent of the patent system—the fostering of invention. "Most important, it must be emphasized that the patent system is written in terms of encouraging and protecting invention, *not* innovation." Stedman, *The U. S. Patent System and Its Current Problems,* 42 Texas L. Rev. 450, 474 (1964). "An increasingly popular contention is that the patent system is not limited to stimulating inventive activity, but plays an equally or more important role in encouraging commercial exploitation and innovation . . . [B]ut the fact remains that our patent system is *not* written in these terms. The criterion for patenting is the creating of an 'invention' . . ." *Id.,* at 454. The theory of our economic system is, of course, that while invention is to be stimulated by the patent monopoly, the fuel of commercial exploitation and innovation is to be the pressure of competition, not the narcotic of monopoly. See *United States* v. *Aluminum Co. of America,* 148 F. 2d 416, 427 (2d Cir. 1945).

2. Moreover, other considerations, intrinsic to the operation of the patent system itself, counsel strongly that the commercial success of a device must not be permitted to remedy the absence of any invention taught in the patent application. The rea-

---

[41] The development of the Calmar and Bakan sprayers for liquids was a reaction to the success of aerosol sprayers in the 1950's. These sprayers, containing a gasified liquid, use a built in sprayhead, and it was competitively important to the liquid spray manufacturers to come up with an innovation that would be comparable. (R. 80)

sons are plain. The Patent Office issues many patents on devices which are not inventions and which are held not to be inventions by the courts.[42] But unless someone is willing to take the risk of an infringement suit, the effect of these invalid patents is as exclusionary and monopolistic as that of a valid patent.

In order to decide whether what is embraced by the Patent Office's grant of a patent is—as unfortunately it frequently is—not an invention, a competitor or potential competitor of the patentee must obtain advice on the patent's validity. That advice, classically, has been given on the basis of a technical and legal examination of the prior art of public record and a setting of the patent in question against it. To add to this sort of analysis the necessity for evaluating the factor of "commercial success" of the device or devices produced commercially under the patent is to introduce enormous additional uncertainties into the process. It substitutes matters within the private knowledge and control of the patentee for the objective facts of public record as the governing criteria. Indeed, it may require the potential competitor to engage in prophecy as to what the future market success of the patentee's product will be. It tends to expand the issues in patent cases and to make patent litigation more vexatious in terms of time and expense.

The introduction of the factor of commercial success as a decisive or seriously consequential factor on the issue of patent validity—as sanctioned by the courts below—thus cannot help but have the effect of endowing patents which are invalid, and which would be challenged as such, with a practical aura of validity

[42] See n. 20, p. 18, *supra*.

by discouraging attempts to challenge them.[43] Thus the anticompetitive effects necessarily present in the patent system would be expanded beyond their legitimate bounds, and the consequences of the *ex parte* procedures in the Patent Office and its proclivity for issuing patents on devices which are not inventions would be worsened.

## CONCLUSION

For the reasons stated, the judgment of the Court of Appeals should be reversed, and the case remanded to the District Court with instructions to grant petitioner's prayer for a declaratory judgment that the

---

[43] And certainly no more effective method of discouraging challenges of invalid patents could be devised than that which the District Court hit upon here. The District Court found that the "extensive commercial success" of the respondent's patented device "was evidenced by the fact that Calmar almost immediately set out to produce an equally successful shipper sprayer." (220 F. Supp., at 420; R. 28) Thus from the competitor's conclusion that a patent is invalid, and his decision to challenge it by mass-producing an item on which the patent may read, is deduced a "commercial success" of the device described in the patent; and from that "commercial success," under the District Court's reasoning, is deduced the validity of that patent.

Scoggin patent is not valid, and to dismiss respondent's counterclaims.

Respectfully submitted,

VICTOR H. KRAMER
DENNIS G. LYONS
1229 Nineteenth Street, N.W.
Washington, D. C. 20036

*Attorneys for Petitioner*

*Of Counsel:*

FRANCIS G. COLE
WATSON, COLE, GRINDLE & WATSON
Washington, D. C.

ARNOLD, FORTAS & PORTER
Washington, D. C.

August, 1965

## APPENDIX A

### Constitutional and Statutory Provisions

1. Article I, Section 8, Clause 8, of the Constitution provides:

> The Congress shall have Power . . .
>
> . . . .
>
> To promote the Progress of Science and useful Arts, by securing for limited Times to Authors and Inventors the exclusive Right to their respective Writings and Discoveries. . . .

2. Sections 101, 102 and 103 of the Patent Code of 1952 provide (35 U.S.C. §§ 101-03):

**§ 101. Inventions patentable**

> Whoever invents or discovers any new and useful process, machine, manufacture, or composition of matter, or any new and useful improvement thereof, may obtain a patent therefor, subject to the conditions and requirements of this title.

**§ 102. Conditions for patentability; novelty and loss of right to patent**

> A person shall be entitled to a patent unless—
>
> (a) the invention was known or used by others in this country, or patented or described in a printed publication in this or a foreign country, before the invention thereof by the applicant for patent, or
>
> (b) the invention was patented or described in a printed publication in this or a foreign country or in public use or on sale in this country more than one year prior to the date of the application for patent in the United States, or

(c) he has abandoned the invention, or

(d) the invention was first patented or caused to be patented by the applicant or his legal representatives or assigns in a foreign country prior to the date of the application for patent in this country on an application filed more than twelve months before the filing of the application in the United States, or

(e) the invention was described in a patent granted on an application for patent by another filed in the United States before the invention thereof by the applicant for patent, or

(f) he did not himself invent the subject matter sought to be patented, or

(g) before the applicant's invention thereof the invention was made in this country by another who had not abandoned, suppressed, or concealed it. In determining priority of invention there shall be considered not only the respective dates of conception and reduction to practice of the invention, but also the reasonable diligence of one who was first to conceive and last to reduce to practice, from a time prior to conception by the other.

**§ 103. Conditions for patentability; non-obvious subject matter**

A patent may not be obtained though the invention is not identically disclosed or described as set forth in section 102 of this title, if the differences between the subject matter sought to be patented and the prior art are such that the subject matter as a whole would have been obvious at the time the invention was made to a person having ordinary skill in the art to which said subject matter pertains. Patentability shall not be negatived by the manner in which the invention was made.

## APPENDIX B

**The Specifics of the Various Over-the-Thread Seals Involved**

COOK'S BAKAN 2
As produced under the Scoggin patent in suit.
Produced Aug. 1957
Abandoned Nov. 1959
See Ex. 10, R. 510

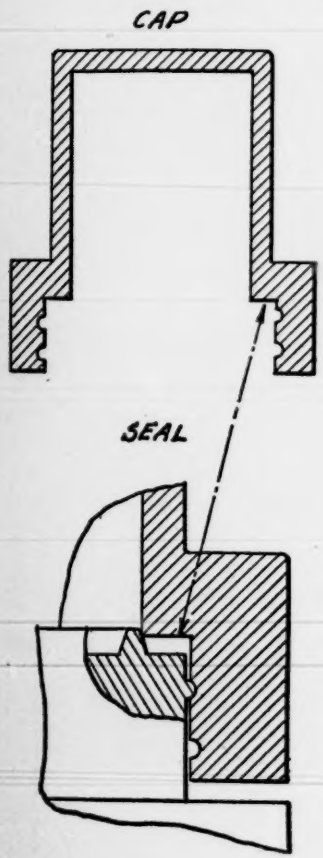


An Example of the Prior Use of a Seal Positioned Like, but Superior in Technique To, Scoggin's
1955 LIVINGSTONE
Patent Fig. 8.
See Ex. H, R. 385

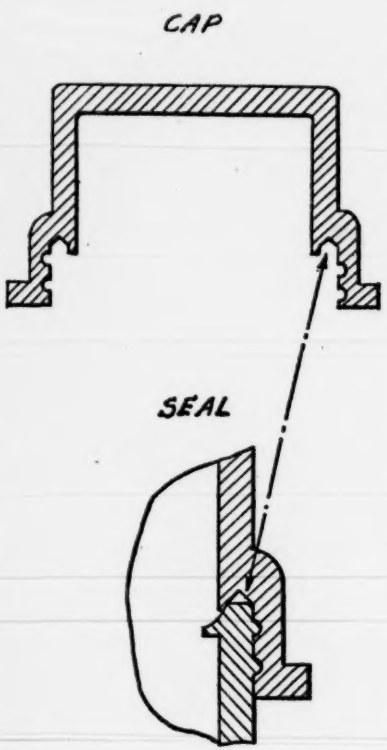


CALMAR's SS-40
The Accused Device
Produced from Jan. 1959
See Ex. QQ, R. 475

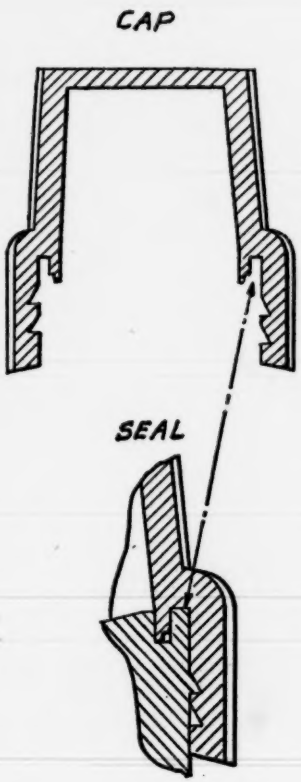


COOK'S
BAKAN 2, MODIFIED
Announced in Nov. 1959
See Ex. 90, R. 517

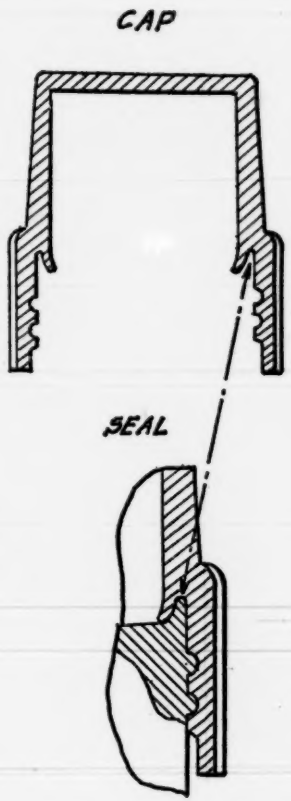


COOK'S BAKAN 3
Produced from 1960
See Ex. EE, R. 434

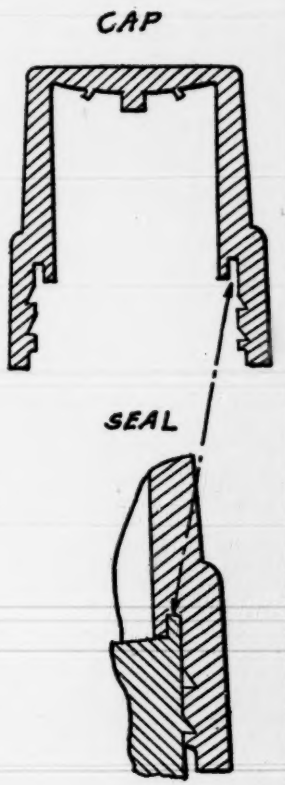

FILE COPY

Office-Supreme Court, U.S.
FILED
AUG 23 1965
JOHN F. DAVIS, CLERK

IN THE

# Supreme Court of the United States

OCTOBER TERM, 1965

## No. 43

COLGATE-PALMOLIVE COMPANY,
*Petitioner,*

vs.

COOK CHEMICAL COMPANY,
*Respondent.*

ON WRIT OF CERTIORARI TO THE UNITED STATES COURT OF APPEALS FOR THE EIGHTH CIRCUIT.

## BRIEF FOR PETITIONER

GEORGE H. MORTIMER
300 Park Avenue
New York, New York 10022

HOWARD A. CRAWFORD
JACK W. R. HEADLEY
15 West Tenth Street
Kansas City, Missouri 64105
*Attorneys for Petitioner.*

Of Counsel:
LATHROP, RIGHTER, GORDON & PARKER
15 West Tenth Street
Kansas City, Missouri 64105

R. L. MENDENHALL, INC., 1108 Oak Street, Kansas City, Mo. 64106, HArrison 1-3030

IN THE

# Supreme Court of the United States

OCTOBER TERM, 1965

## No. 43

COLGATE-PALMOLIVE COMPANY,

*Petitioner,*

vs.

COOK CHEMICAL COMPANY,

*Respondent.*

ON WRIT OF CERTIORARI TO THE UNITED STATES COURT OF APPEALS FOR THE EIGHTH CIRCUIT.

## BRIEF FOR PETITIONER

### OPINIONS BELOW

The opinion of the Court of Appeals is reported at 336 F. 2d 110, and appears at R. 555. The opinion of the District Court for the Western District of Missouri is reported at 220 F. Supp. 414, and appears at R. 17.

## JURISDICTION

The judgment of the Court of Appeals was entered on August 21, 1964 (R. 564). A timely Petition for Rehearing En Banc was denied on October 9, 1964 (R. 577). The petition for a writ of certiorari was filed on January 6, 1965 and was granted on March 29, 1965. The jurisdiction of this Court is based on 28 U.S.C. Sec. 1254(1).

## STATEMENT

By order of this Court entered March 29, 1965 (R. 580), this case was consolidated with No. 37, *Calmar, Inc., Petitioner,* v. *Cook Chemical Company, Respondent.* The two cases were consolidated for trial in the District Court (R. 15) and the District Court entered one judgment against both defendants (R. 36). Likewise, the two cases were consolidated on appeal to the United States Court of Appeals for the Eighth Circuit and that Court entered one judgment affirming the judgment of the District Court (R. 564). The record in both cases has been lodged with this Court as a joint record in both cases.

The device found by the Court of Appeals to infringe Respondent's patent is a pump-type finger-operated plastic sprayer for dispensing liquids which was produced by Calmar, Inc., sold by it to Colgate-Palmolive Company, fastened to the necks of insecticide bottles, and resold as part of the complete package by Colgate. The accused device described in Respondent's counterclaim for infringement against Calmar, Inc. (R. 3), and the accused device described in Count I of Respondent's counterclaim against Colgate-Palmolive Company (R. 13) are one and the same.

The question presented, the constitutional provision and statutes involved, the facts and the reasons for reversing and remanding the judgment of the Court of Appeals are the same in this case as in *Calmar, Inc.* v. *Cook Chemical Company*, No. 37.

It would unduly burden the Court if the Petitioner, Colgate-Palmolive Company, were to repeat here the contents of the brief filed or to be filed by Calmar, Inc., which Counsel for Colgate-Palmolive Company have read with great care. Therefore, this Petitioner adopts and incorporates by reference the statements of the Question Presented, the Constitutional Provision and Statutes Involved, and of the Facts, the Summary of Argument, the Argument and all Appendices contained in the brief of Calmar, Inc. in No. 37.

## ADDITIONAL ARGUMENT

In addition to the argument presented in Calmar's brief Petitioner submits the following argument with particular reference to pages 20 and 21 of the Calmar brief where reference is made to No. 11, *Graham* v. *John Deere Co.*

This Court is being urged in the *amicus curiae* briefs of various bar associations in No. 11 to hold that Section 103 established a standard of patentability different from the standard applied in some of the cases decided in the years immediately prior to the enactment of the Patent Act of 1952. Notably in the brief of the American Bar Association it is urged "that Sec. 103 modified the 'exacting standard' which the Circuit Court of Appeals for the Eighth Circuit in this case [No. 11] (333 F. 2d 534) found 'implicit in the teachings' of *Cuno Engineering Corporation* v. *Automotive Devices Corp.*, 314 U.S. 84 (1941) and *Great A. & P.*

*Tea Co.* v. *Supermarket Equipment Corp.*, 340 U.S. 147 (1950)", and that Section 103 stated the governing standard substantially in the terms laid down in *Hotchkiss* v. *Greenwood*, 11 How. 248 (1850).

Calmar's brief argues that the cases decided by this Court immediately prior to the Patent Act of 1952 do not appear to amount to any departure from the standards which this Court has followed for a century beginning with the Hotchkiss case. But, regardless of whether the standard is phrased in terms of this Court's decisions or in terms of Section 103, the question of the validity of the Scoggin patent must certainly be answered in the negative.

In the terms of Section 103 would it have been obvious for a person having ordinary skill in the art of making dispensers for liquids in containers for household use at the time Scoggin was developing his pump to relocate the seal which Lohse (see page 4, Calmar's brief) disclosed under the holddown cap to a position above the collar where Scoggin put it (see page 3 and Appendix B, Calmar brief)? The answer must be a definite yes in view of Mellon and Livingstone (see pages 7 and 8 respectively of Calmar's brief) who clearly disclose this location for a seal in the same art. The prior art taught the location for the seal between a hold-down cap for a dispenser pump and the fixed parts of the pump structure. It was therefore merely a matter of choice for a man of ordinary skill in the art at the time Scoggin developed his pump whether he placed the seal in one location or the other. The effect of the holding by the courts below is to deprive the public of this obvious choice and thus take away from the public something it possessed prior to Scoggin. More specifically, Calmar and Petitioner have been held to be infringers for using the Livingstone cap and seal in a pump device

otherwise essentially a copy of Calmar's own prior pump dispenser (R. 480 and 488). The principle that "that which infringes, if later, would anticipate, if earlier" (cf *Knapp* v. *Morss*, 150 U.S. 221, 228 (1893)) should have application not only to Sec. 102 but also to Sec. 103 of the Patent Act of 1952 since both sections involve taking from the public that which it is entitled to make. However the standard is phrased, the invalidity of the Scoggin patent is plain.

## CONCLUSION

For the reasons stated in the brief of Calmar, Inc., in No. 37, and the additional reason above set out, the judgment of the Court of Appeals should be reversed and the case remanded to the District Court with instructions to grant Petitioner's prayer for a declaratory judgment that the Scoggin patent is not valid and to dismiss Count I of Respondent's counterclaim against this Petitioner.

Respectfully submitted,

GEORGE H. MORTIMER
300 Park Avenue
New York, New York 10022

HOWARD A. CRAWFORD
JACK W. R. HEADLEY
15 West Tenth Street
Kansas City, Missouri 64105
*Attorneys for Petitioner.*

Of Counsel:
LATHROP, RIGHTER, GORDON & PARKER
15 West Tenth Street
Kansas City, Missouri 64105

## INDEX


OPINIONS BELOW ..... 1

QUESTION PRESENTED ..... 2

STATUTE INVOLVED ..... 3

STATEMENT ..... 3

I. The Nature of the Litigation and the Identity of the Parties ..... 3

II. The Difficult Situation in the Industry Prior to the Scoggin Invention ..... 4

III. The Scoggin Invention Mastered the Problem Which Calmar Continued to Be Unable to Solve 8

IV. The Invention of the Scoggin Patent ..... 11

V. The Decisions Below ..... 16

SUMMARY OF ARGUMENT ..... 19

ARGUMENT ..... 21

I. The Courts Below Correctly Held That the Invention Met the Requirements for Patentability Established by Congress ..... 21

A. The Patent in Question Covered a Novel Combination of Known Elements ..... 22

B. The Shipper-Sprayer in Issue Clearly Had Significant Commercial Utility ..... 29

C. Respondent's Invention Was Not Obvious to a Person Having Ordinary Skill in the Art .. 31

II. The Decisions Below Do Not Substitute "Commercial Success for Invention" ..... 35

III. The Decision of the Court Below Did Not Countenance "A Debasement of the Constitutional Standard of Invention" ..... 38

CONCLUSION ..... 44

APPENDIX ..... A1

## Citations

### CASES

*Bates* v. *Coe*, 98 U.S. 31 (1878) ..... 24

*Bros. Inc.* v. *Browning Mfg. Co.*, 317 F.2d 413 (8th Cir. 1963) ..... 41

*Caldwell* v. *Kirk Mfg. Co.*, 269 F.2d 506 (8th Cir. 1959) 41

*Collins* v. *Owen*, 310 F.2d 884 (8th Cir. 1962) ..... 41

*Cuno Engineering Corp.* v. *Automatic Devices Corp.*, 314 U.S. 84 (1941) .....17, 26, 28, 31, 39, 42

*Diamond Rubber Co.* v. *Consolidated Rubber Tire Co.*, 220 U.S. 428 (1911) .....24, 34

*Expanded Metal Co.* v. *Bradford*, 214 U.S. 366 (1909) ..34, 35

*Ezee Stone Cutter Mfg. Co.* v. *Southwest Industrial Products*, 262 F.2d 183 (8th Cir. 1958) .....36, 42

*Forestek Plating & Mfg. Co.* v. *Knapp-Monarch Co.*, 106 F.2d 554 (6th Cir. 1939) ..... 36

*Goodyear Tire & Rubber Co., Inc.* v. *Ray-O-Vac. Co.*, 321 U.S. 275 (1944) .....34, 35

*Great Atlantic & Pacific Tea Co.* v. *Supermarket Equipment Corp.*, 340 U.S. 147 (1950) .....17, 26, 27, 28, 29, 42

*Hailes* v. *Van Wormer*, 87 U.S. (20 Wall.) 353 (1873) 24

*H. D. Hudson Mfg. Co.* v. *Standard Oil Co.*, 60 F.2d 377 (8th Cir. 1932) ..... 42

*Hildreth* v. *Mastoras*, 257 U.S. 27 (1921) ..... 30

*Hotchkiss* v. *Greenwood*, 52 U.S. (11 How.) 248 (1850) ..... 31

*John Blue Co.* v. *Dempster Mill Mfg. Co.*, 275 F.2d 668 (8th Cir. 1960) .....41, 42

*John Deere Co. of Kansas City* v. *Graham*, 333 F.2d 529 (8th Cir. 1964), *cert. granted*, No. 11, Oct. Term 1965 41

*Johnson Fare Box Co.* v. *National Rejectors, Inc.*, 269 F.2d 348 (8th Cir. 1959) ..... 41

*Krementz* v. *S. Cottle Co.*, 148 U.S. 556 (1893) ..... 34

*Keystone Mfg. Co.* v. *Adams*, 151 U.S. 139 (1894) ..... 24

*Lincoln Engineering Co.* v. *Stewart-Warner Corp.*, 303 U.S. 545 (1938) ..... 26, 28, 29

*Loom Co.* v. *Higgins*, 105 U.S. 580 (1881) ..... 24, 34

*McGraw-Edison Co.* v. *Central Transformer Corp.*, 308 F.2d 70 (8th Cir. 1962) ..... 41

*Mergenthaler Linotype Co.* v. *Press Publishing Co.*, 57 Fed. 502 (C.C. S.D. N.Y. 1893) ..... 30

*Parks* v. *Booth*, 102 U.S. 96 (1880) ..... 24

*Pearce* v. *Mulford*, 102 U.S. 112 (1880) ..... 31, 42

*Reiner* v. *I. Leon Co.*, 285 F.2d 501 (2d Cir. 1960) ..... 36, 38

*Rota-Carb Corp.* v. *Frye Mfg. Co.*, 313 F.2d 443 (8th Cir. 1963) ..... 41

*Scherr* v. *National Bio-Test, Inc.*, 301 F.2d 901 (8th Cir. 1962) ..... 41

*Selmix Dispensers, Inc.* v. *Multiplex Faucet Co.*, 277 F.2d 884 (8th Cir. 1960) ..... 41

*Steffan* v. *Weber Heating & Sheet Metal Co.*, 237 F.2d 601 (8th Cir. 1956) ..... 42

*Syracuse* v. *H. Daust Mfg. Co.*, 280 F.2d 377 (8th Cir. 1960) ..... 41

*Telephone Cases*, 126 U.S. 1 (1888) ..... 30

*Temco Elec. Motor Co.* v. *Apco Mfg. Co.*, 275 U.S. 319 (1928) ..... 36

*The Barbed Wire Patent*, 143 U.S. 275 (1892) ..... 34

*Toledo Pressed Steel Co.* v. *Standard Parts, Inc.*, 307 U.S. 350 (1939) ..... 26, 29

*Tropic-Aire* v. *Sears, Roebuck & Co.*, 44 F.2d 580 (8th Cir. 1930) ..... 42

*Wm. F. Crome & Co.* v. *Vendo Co.*, 299 F.2d 852 (8th Cir. 1962) ..... 42

STATUTES

35 U.S.C. § 101 ..... 2, 3, 16, 19, 21, 27, 29, 39

35 U.S.C. § 102 ..... 2, 3, 16, 19, 21, 27, 39

35 U.S.C. § 103 ..... 2, 3, 17, 19, 21, 27, 31, 32, 35, 39, 42

MISCELLANEOUS

"An Analysis of Patent Litigation Statistics," Staff Report, Subcommittee on Patents, Trademarks and Copyrights, Senate Judiciary Committee, 86th Cong., 2d Sess. (1961) ..... 41

Briskin, *An Area of Confusion: Patents Monopolies and the Antitrust Laws*, 49 A.B.A.J. 661, 663 (1963) ..... 43

Bush, Dr. Vannevar, Study No. 1, made pursuant to Senate Resolutions 92 and 167 of the 84th Cong., 2d Sess., 1956, p. 19 ..... 43

Frost, George E., *The Role of the Law in Research Competition*, 3 P.T.C.J. Res. & Ed. 93, 95 (1959) ..... 43

Land, Edwin H., *The Role of Patents in the Growth of New Companies*, 41 J. Pat. Off. Soc'y 502, 506 (1959) 43

Malley, *Patent Antitrust Problems and the Attorney General's Report*, 24 Geo. Wash. L. Rev. 20, 25 (1955) 43

Siegel, Irving H., *Patents and Other Factors in the Creation and Growth of Small Firms: Preliminary Synthesis*, 3 P.T.C.J. Res. & Ed. 47 (1959) (Proceedings 1959 Annual Public Conference of the Patent, Trademark and Copyright Research Institute, George Washington University) ..... 43

IN THE

# SUPREME COURT OF THE UNITED STATES

OCTOBER TERM, 1965

## No. 37

CALMAR, INC.,

*Petitioner,*

vs.

COOK CHEMICAL COMPANY,

*Respondent.*

## No. 43

COLGATE-PALMOLIVE COMPANY,

*Petitioner,*

vs.

COOK CHEMICAL COMPANY,

*Respondent.*

ON WRITS OF CERTIORARI TO THE UNITED STATES COURT OF APPEALS FOR THE EIGHTH CIRCUIT

## BRIEF FOR RESPONDENT

### OPINIONS BELOW

The opinion of the Court of Appeals is reported at 336 F.2d 110, and appears at R. 555. The opinion of the District Court for the Western District of Missouri is reported at 220 F. Supp. 414, and appears at R. 17.

## QUESTION PRESENTED

The patent in issue covers a *shipper-sprayer*, which is a unit capable of being integrated and shipped with a liquid container as a composite package. It combines for the first time in the history of the art (1) a pump-type liquid sprayer; (2) a cover cap that is initially assembled with the sprayer at the time the unit is manufactured, that houses and holds the plunger of the pump depressed for protection against damage and accidental actuation during shipment and handling; (3) a seal established within the cover cap when it is first assembled as a part of the sprayer unit, that prevents leakage to the outside of the container; and (4) a container cap that can be sealed to the container without breaking the seal within the cover cap and that need not be removed by the user before spraying.

The District Court found that the subject matter of the patent was new, useful, and not obvious to a person having ordinary skill in the art and hence met the conditions for patentability prescribed by Sections 101-103 of the Patent Act of 1952. The Court of Appeals affirmed these findings, and in so doing applied the legal standards long required by this Court.

The question presented is whether the court below correctly held that these findings were supported by the record and that the patent was valid.*

---

*Petitioners have not asked this Court to review the holdings below that they infringed the patent. Infringement should therefore be taken as established.

## STATUTE INVOLVED

The relevant provisions of the Patent Act of 1952, 35 U.S.C. §§101, 102 and 103 are set forth in the Appendix.

## STATEMENT

### I. The Nature of the Litigation and the Identity of the Parties.

These cases were instituted by complaints filed in the United States District Court for the Western District of Missouri by Colgate-Palmolive Company (Colgate) and Calmar, Inc. (Calmar) against Cook Chemical Company (Cook), seeking a declaratory judgment that U. S. Patent No. 2,870,943 issued to Baxter I. Scoggin, Jr. on January 27, 1959, and owned by Cook, was invalid and not infringed by plaintiffs. In each action the defendant answered and also counterclaimed seeking a declaration of validity of its patent and a finding of infringement.*

Cook, a small corporation located in Kansas City, Missouri, is primarily engaged in the business of making and selling insecticides and certain other chemical products. Since 1954 Cook has also manufactured plastic sprayers for liquids, having entered this field by internal expansion under circumstances that are described below. In fiscal 1964 Cook's total sales were $7,227,721 and its total current assets amounted to $2,604,802. Calmar is a wholly-owned subsidiary of The Drackett Company (Drackett), which is engaged in the manufacture and sale of a variety

*Against Colgate, Cook also counterclaimed for trademark infringement and for unfair competition, alleging a variety of imitative practices. That counterclaim was severed and awaits trial in the District Court.

of products, including a window cleaner called "WINDEX."* Through Calmar, Drackett manufactures shipper-sprayers, which it uses in its business and which it also sells to other users. Colgate purchased its requirements of shipper-sprayers from Calmar. Colgate is a very large corporation engaged in producing and distributing a variety of products, including an insecticide that it marketed under the trademark "KAN-KIL" in competition with "REAL-KILL" insecticide manufactured and sold by Cook.**

The suits grew out of the competitive struggle in the business of manufacturing and selling insecticides. Until recent years that business was carried on by a substantial number of small companies scattered throughout the country, of which respondent was one (R. 19, 54-55). More recently the industry has undergone structural changes as a result of the entry into the business of large corporations, such as Colgate, which are engaged in diversified activities and operate on a national scale (R. 53).

## II. The Difficult Situation in the Industry Prior to the Scoggin Invention.

For many years those engaged in the household insecticide business had been faced with a serious problem of providing shipper-sprayers which could successfully be integrated with the containers in which insec-

---

*In 1964 Drackett's net sales were $58,476,246 and its balance sheet showed total current assets of $17,779,740 (Moody's Industrial Manual, 1965, pp. 1723-1724).

Since the institution of this litigation Drackett has been acquired by Bristol-Myers Company (Moody's Industrials—News, Vol. 37, No. 15, p. 2755, July 9, 1965).

**In 1964 Colgate was 74th in a list of the 500 largest United States Industrial Corporations ranked in terms of sales. See Fortune Magazine, July, 1965, p. 152. In 1964 its gross sales amounted to $806,580,876 and its total current assets to $284,740,891 (Moody's Industrial Manual, 1965, pp. 1608-1610).

ticides were marketed. When Cook entered the household insecticide field in 1945, the customer was subjected to the inconvenience of having to apply the insecticide through the use of tin sprayers, which were not supplied by the seller of the insecticide but had to be purchased separately by the customer from other sources (R. 19, 50-51, 556).

In 1947 Cook commenced furnishing its customers with plastic pump-type sprayers (R. 18, 51, 556), utilizing both cardboard and plastic holders as a means of hanging the sprayers on the side of the bottles (R. 20, 51, 52, 556).* The practice of hanging the sprayer on the side of the container continued unchanged for a period of ten years (R. 556) prior to the first commercialization of the Scoggin invention (R. 152).

Hanging the sprayer on the side of the bottle was replete with shortcomings (R. 20, 52, 53, 556); many separate, expensive and troublesome operations were necessary. After filling, an imperforate container cap had to be applied and sealed on the bottle; the cardboard holder had to be placed on the neck; each sprayer and each holder had to be separately handled; and the dip tube had to be inserted into the small hole of the holder (R. 53).

Sprayer breakage, as admitted by petitioner Calmar (R. 299), even before the package reached the shelves of the retailer, was a handicap which of itself presented a need for the Scoggin invention (R. 60, 151, 152, 315).

---

*It is such attachment of the sprayer to the bottle by a holder which respondent's president (R. 51) and the appellate court (R. 556) referred to as "a sales promotion gimmick," not the patented unit here in issue as petitioners imply (Pet. Br. p. 30). The references to petitioners' brief herein are to the brief filed by petitioner Calmar, unless otherwise specifically indicated. The additional arguments made in the Colgate brief add nothing of substance to the Calmar brief.

From the time the shipping carton was opened and the packages placed on the retail shelves and until they reached the hands of the housewife, avoidance of loss of the sprayer from the holder presented a troublesome task. Rapid and careless handling together with pilferage (R. 299, 315, 323, 332, 333) resulted in the need for a better package. From the time the housewife took the package off the retail shelf and placed it in a shopping basket, until she removed it from the retail store in a shopping bag, constant care had to be exercised to avoid accidental loss and breakage of the sprayer. As distinguished from the more convenient aerosol package (R. 556), before the product could be placed in use the container cap had to be removed, the sprayer inserted into the bottle and the cap on the sprayer attached into proper sealing relationship to the neck of the bottle.

The difficulties and disadvantages involved in attaching the sprayer to the container were so great that Cook, which had no experience in or knowledge of the manufacture of sprayers, urged Calmar to develop a shipper-sprayer that could be installed in the bottles and that would prevent leakage in shipment, that would not be subject to damage in shipment and that would not be vulnerable to pilferage after it reached the retailers' shelves (R. 20, 556, 557). Beginning in 1949 Calmar attempted unsuccessfully to solve the problem and designed a number of devices, as for example, a cellulose cover or hood for application over the top of the sprayer (R. 76), a flat back bottle (R. 336), a plug for the end of the sprayer tube (R. 325, 337), a boot to be placed inside the filled bottle (R. 537, 542), and several other devices such as a cap over the discharge nozzle (R. 337, 338). None of these devices proved satisfactory (R. 322, 325, 333).

In 1954 petitioner Colgate-Palmolive Company diversified beyond its normal line of products and entered the

household insecticide field in competition with respondent, selecting the trademark "KAN-KIL" and selling alongside respondent's product long known by the trademark "REAL-KILL" (R. 19, 53, 556). Colgate limited its packages to aerosol cans for the first few years of its insecticide business but in 1958 expanded to liquid insecticides (R. 19, 54, 556).* The same trademark "KAN-KIL" was used by Colgate when it commenced packaging liquid insecticides in bottles (R. 19); and not only did it select a bottle such as that employed by respondent, but sprayers obtained from the same source were hung on the side of such bottles in the same manner and through the use of the same type of cardboard holder as had become known in the trade by respondent's customers over the previous seven-year period (R. 54, 556). (See photograph in the Appendix hereof showing such Colgate package.)

The convenience of an aerosol sprayer, presenting a ready-to-use package to the housewife, was appreciated by Colgate (R. 556); and after four years of use, it expressed to Calmar its desire for a package similar to an aerosol package for liquid insecticides (R. 542). However, Calmar was not able to furnish Colgate with a satisfactory package, forcing Colgate to adopt the only packaging method then known in the industry, *i.e.*, hanging the sprayer on the side of the bottle, which had been pioneered by Cook.

---

*An aerosol package is a pressurized can which contains a propellant gas in addition to the product. The product in the package is sprayed by the action of the propellant gas when a pushbutton on the top of the package is depressed.

Colgate recognized the fact that Cook had an established market in liquid insecticides which are less costly to the consumer than the aerosols and fill a need for riddance of crawling insects, whereas the more expensive aerosols provide a finer mist and are used primarily to combat flying pests.

### III. The Scoggin Invention Mastered the Problem Which Calmar Continued to Be Unable to Solve.

Upon the sale of Calmar to Drackett in 1954 Cook felt impelled to organize a small company, which it called Bakan Plastics, Inc., for the purpose of manufacturing the unpatented sprayers, because of its fear that Drackett would use its own major output of sprayers on "WINDEX". Actual production by Bakan commenced in 1956 (R. 20, 55, 556). Even in 1955, before Cook had finished its preliminary work in connection with its first sprayer, Scoggin began devoting his attention to the possibility of producing a shipper-sprayer capable of being integrated with the bottle (R. 145, 146). His work finally resulted in the invention upon which the Scoggin patent application was filed on March 4, 1957 (R. 21, 510-512).

The shipper-sprayer invention by Scoggin includes, in brief description, a plastic liquid sprayer installed in a bottle cap with a plastic overcap that screws into plastic threads on a collar mount for the sprayer onto the bottle cap. When the overcap is screwed into these threads the plunger of the sprayer is depressed and protected against breakage. By means of a junction of the shoulder on the inside of the overcap and a rib at the top of the mount for the sprayer a seal is formed above the threads when the overcap is applied and screwed down, thereby preventing leakage of the liquid contents* outside of the overcap. The design of the unit is such that it can be automatically installed in one piece, with the overcap attached and sealed, on the filled bottle. After purchase, the ultimate consumer merely removes and discards the overcap, and is then ready to commence spraying the contents of the container.

---

*Such as, insecticides, window cleaners and many other liquids in chemical, medicinal and other fields.

The Scoggin invention came on the market in August, 1957 (R. 152). In less than a year and a half, during the remainder of 1957 and through 1958, Cook's original Bakan-2 unit was sold in quantities of at least 15 million (R. 153, 158). Sales of such original model continued to as late as 1959 and perhaps into 1960 (R. 153). A single customer used one million (R. 158). The production by respondent ran from 100,000 to 110,000 units per day. This production was in the face of heavy competition from Calmar, as it voluntarily admitted in open court, to the extent of its having manufactured many *millions* of the accused structure (R. 66).

Following the acquisition of Calmar by Drackett in 1954, Calmar continued to expend time and money in an endeavor to develop a successful shipper-sprayer (R. 557). Its efforts were directed, in part, to the provision of a boot (R. 537, 561) which proved to be totally unsatisfactory. Calmar also attempted tenaciously to develop a so-called "sealed-in" sprayer (the S-25-LP) designed to be inserted into the container and to have its plunger locked by a bayonet slot-lug. A seal within the sprayer was supposed to have prevented leakage to the outside of the container. This device had been earlier submitted to respondent by Calmar and rejected because it leaked (R. 55, 56).

The S-25-LP was presented by Calmar to its customers as a shipper-sprayer and one of such customers, S. C. Johnson & Son, Inc., tried to solve Calmar's difficulties by a hood to contain the leakage past the seal (R. 76). On March 13, 1958 it was reported to Calmar that S. C. Johnson & Son, Inc., was still having leakage problems with the S-25-LP, "too serious to gamble with" (R. 539); also, that Johnson had Cook's Bakan unit on test "and cap is not leaking" (R. 538, 539). The S-25-LP sprayer never became successful (R. 75, 301) notwithstanding the vast

source of research and development capital now available from Drackett. Calmar's president admitted that such sprayer continued to plague (R. 77) them with grievous, serious (R. 74) and sad experiences and great difficulties (R. 20, 77, 557).

Calmar became aware of the Scoggin invention in the fall of 1957, soon after it came on the market (R. 78). In December of that year, Colgate rejected Calmar's so-called "leakproof boots" and expressed a preference for a sprayer unit similar to the Scoggin invention (R. 542). In the same month, Calmar employed Douglas F. Corsette, who had been employed by a company that built an automatic assembling machine for assembling sprayers and who held both a Bachelor's and a Master's Degree in engineering, and he was thereafter given an assignment to develop an adequate shipper-sprayer (R. 542, 79-90). The president of Calmar testified that this was done "because we were faced with real problems with our customers, our own products" (R. 306), referring to S. C. Johnson & Son, Inc. and the leaky S-25-LP device which Johnson was using.

In March, 1958, the president of Calmar, referring to the possibility of developing a new leak-proof sprayer, said that it was difficult "to restrain my enthusiasm for this item" and that such a sprayer "is what we need to seize market initiative from our competitors next year." (R. 550.)

On September 9, 1958, a patent application was filed on the infringing shipper-sprayer (R. 529, 561), initially *seeking patent protection on the same basic combination of elements as is found in the claims of the Scoggin patent here in issue* (R. 283). Commercial production commenced prior to January 27, 1959 (R. 261). In 1958 or 1959, S. C. Johnson & Son, Inc. abandoned Calmar's S-25-LP with the

hood and began using the infringing sprayer with its "RAID" insecticide (R. 57, 58). Similarly, Colgate abandoned the practice of hanging the sprayer on the side of the bottle in favor of the infringing sprayer. (See photograph in Appendix.)

The "dead ringer" copying by Calmar, Inc. (R. 563) is recorded clearly and emphatically by the lower courts:

> "Exercising our appellate prerogative in a patent case to interpret the exhibits for ourselves, we are constrained to agree with the trial court's statement that 'Upon close inspection of the devices, it is difficult to see how they could be much more similar and yet have any different fetures'." (R. 562.)

### IV. The Invention of the Scoggin Patent

Scoggin Patent No. 2,870,943 in suit (Def. Ex. 10; R. 84) includes a sheet of drawings (R. 510), reproduced on pages 12 and 13 hereof, the resultant package as shown, for example, at R. 513 (Def. Ex. 31), being also illustrated in our appendix. There are two caps, the perforated container cap 14 screwed onto neck 16 of container 12 and cover cap 40 screwed onto collar 18 of sprayer 10.

The pump-type sprayer unit 10 has a spray head 34 secured to the upper end of a plunger 26; a barrel 24, receives a plunger 26 having a dip tube 30 on its lower end for drawing liquid from container 12.

Pump 10 is supported by container cap 14 or, stated another way, cap 14 is attached to pump 10. Barrel 24 passes through a hole in the top of container cap 14. A gasket 38 lies across the upper edge of container neck 16, serving as a seal between container cap 14 and container neck 16. A collar or annular retainer 18 is secured to barrel 24.

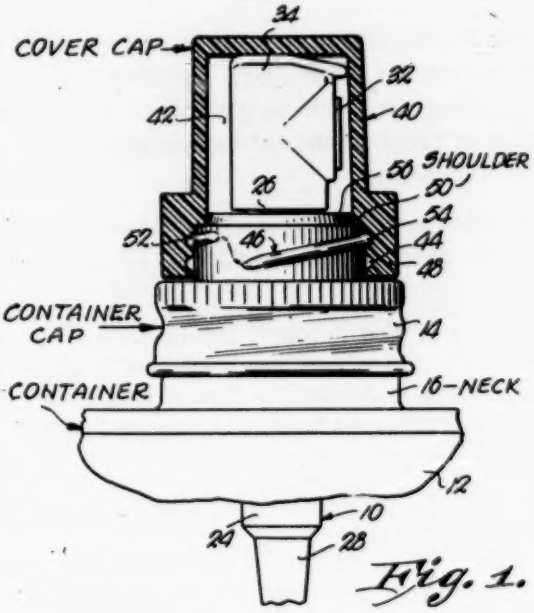
34
COVER CAP
32
42
40
SHOULDER
50
26
50
54
52
46
44
48
CONTAINER CAP
14
CONTAINER
16—NECK
12
10
24
28

Fig. 1.

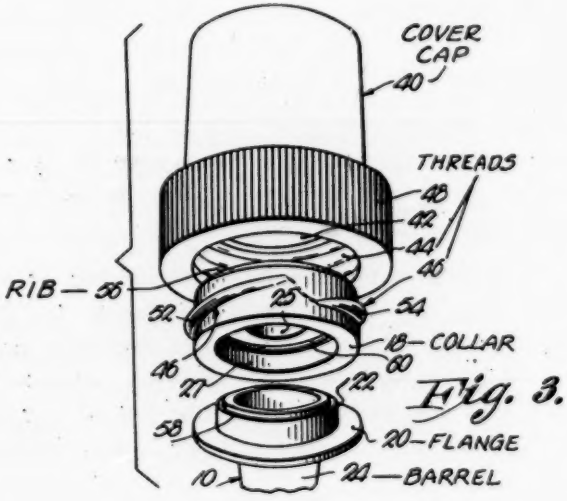
COVER CAP
40
THREADS
42
44
46
RIB — 56
52
25
54
18— COLLAR
46
27
60
22
58
20—FLANGE
10
24—BARREL

Fig. 3.

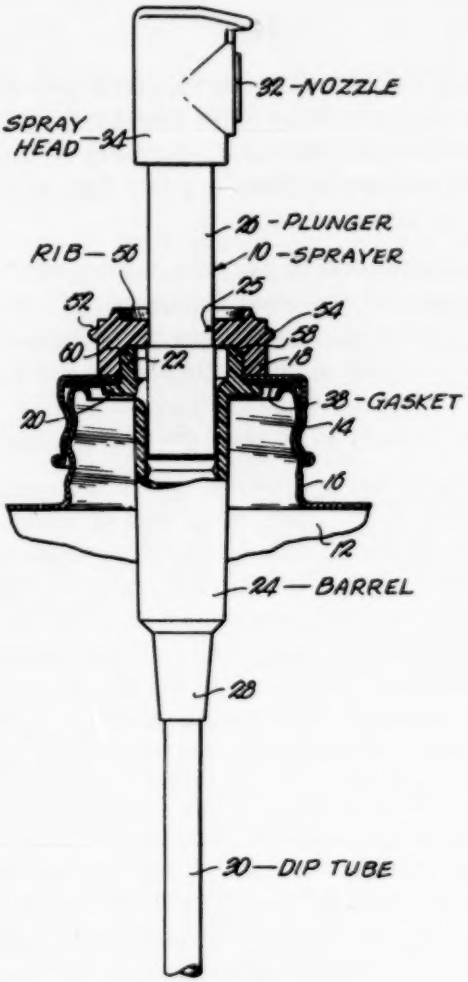


Fig. 2.

INVENTOR.
Baxter I. Scoggin
BY
ATTORNEY

Thus, when cap 14 is on neck 16, pump unit 10 is supported in its upright position, with barrel 24 and dip tube 30 disposed inside container 12. Before cap 14 is screwed onto neck 16 it remains attached to pump unit 10 by virtue of the retaining action of collar 18.

The cup-shaped cover cap or hold-down member 40 not only holds plunger 26 depressed at substantially the innermost end of its path of travel within barrel 24 but houses spray head 34. External screw threads 46 on the outer cylindrical side wall of collar 18 complementally engage internal screw threads 44 in the bore 42 of cover cap 40.

A liquid-tight seal is provided between sprayhead 34 and threads 44 and 46. The sealing part of collar 18 surrounds plunger 26 and is shown as a rib or segment 56 on the upper part of retainer 18 above threads 46. The sealing part of cover cap 40 is a shoulder 50 which is the internal corner between the small diameter part and the large diameter part of bore 42. Shoulder 50 engages the sealing rib 56 and is deformed thereby into sealing engagement therewith as cover cap 40 is screwed down onto collar 18 to depress and enclose spray head 34.

*This is the area (between shoulder 50 and rib 56) where petitioners are still asserting that leakage occurred to such extent as to render respondent's unit a commercial failure* (Pet. Br. pp. 10, 23, 24, 27). *And it is this particular and exact type of seal 50-56 that petitioners continue to assert is the Scoggin invention* (Pet. Br. pp. 2, 4, 6, 10, 18, 22). *Both assertions are directly contrary to the findings below* (R. 24, 28, 560-562).

The lower edge of cover cap 40 does not engage the top of container cap 14. Thus, there is no sealing against container cap 14 or against any type of gasket overlying container cap 14. Instead, all of the sealing takes place

on collar 18 within cover cap 40, and the tight engagement of shoulder 50 against rib 56 takes place as cover cap 40 is screwed onto collar 18, but without cover cap 40 moving into engagement with container cap 14.

*Petitioners contend that Mr. Scoggin represented to the Patent Office that this space or gap (between the two caps) was his "invention". Petitioners claim that upon a representation that such "invention" was not shown by the prior art, the Patent Office issued the patent* (Pet. Br. pp. 5, 6, 7). *Again this is all directly contrary to the findings below* (R. 27).

The Court of Appeals accepted the following description, given by respondent's expert witness, as an accurate statement of "the device's novel contribution to the industry" (R. 559):

> "The first commercially successful, inexpensive integrated shipping closure pump unit which permitted automated assembly with a container of household insecticide or similar liquids to produce a practical, ready-to-use package which could be shipped without external leakage and which was so organized that the pump unit with its hold-down cap could be itself assembled and sealed and then later assembled and sealed on the container without breaking the first seal." (R. 279.)

In its advertising anouncements of its new product Cook defined the contribution of the invention in a manner consistent with this testimony. Cook's advertising literature stated that the "sprayer comes completely assembled with a protective plastic cap * * *" and that the product "manufacturer can begin immediately to package his product with

the sealed-in sprayer" (R. 430).* Both the trial court and the Court of Appeals accepted these descriptions of the nature of the invention. In view of these findings and the facts which support them, there is no basis for petitioners' assertion that the Scoggin invention is (a) in the provision of the space or gap, (b) in any special type of seal, (c) in rearrangement or reshuffling of component parts or (d) in any other minute detail as contended by petitioners (Pet. Br. pp. 2-7, 10, 12, 17, 18, 20-23, 26).

## V. The Decisions Below

The District Court held that the Scoggin patent was valid. It found that the Scoggin patent met the requirements of novelty and utility set forth in Sections 101 and 102 of the Patent Act (35 U.S.C. §§101, 102). In dealing with these requirements the court, although noting that the invention was composed of known elements, held that the combination of these elements solved the problems of leakage and breakage in the shipment of the products with which the spray pumps were used. It considered the prior art relied upon by petitioners and held that it did not disclose or teach the invention. In dealing with the requirement of utility, the court relied primarily on the fact that the invention solved the problems of leakage and breakage. The court also referred to the commercial success of the Scoggin patent, saying that it was "an element that may be taken into consideration in determining the question of invention, but is not necessarily determinative of the issue." (R. 28.)

---

*Respondent's advertising stated, adjacent to an illustration of the new package:

> "COMPLETELY ASSEMBLED 'IN THE BOTTLE' SPRAYER Super polyethylene cover cap provides a sealed, leak-proof protective cover for the sprayer. Enables manufacturer to ship and merchandise his product with a sprayer in the container. READY TO USE. Eliminates the problem of broken or lost sprayers on dealers' shelves." (R. 431.)

The District Court further held that the patent met the condition for patentability prescribed in Section 103 of the 1952 Patent Act because the subject matter was not obvious at the time the invention was made to a person having ordinary skill in the art. In dealing with this point the Court said:

> "The manufacturers of sprayers had not been able to solve the problem of leakage and breakage in the shipment of the products with which their spray pumps were used. Numerous ideas had been suggested by Calmar, the experiments were made, but none of them solved the problem. These facts and circumstances certainly must lead us to seriously doubt that it was so simple a mechanical problem as it seems now that it has been solved. However, simplicity and obviousness after the event do not negative invention. *Goodyear Co.* v. *Ray-O-Vac Co.*, 321 U.S. 275 and cases cited in note 4, p. 279.
>
> "Now that it has been solved, one trained in mechanics and in the art might say, 'Well, that was a very simple problem and should easily have been solved', but the fact that many people were thinking about and working on it, and were unable to come up with the answer, raises it above the principle of mere simplicity. Hindsight is generally 20-20." (R. 25.)

The Court of Appeals for the Eighth Circuit affirmed the judgment of the District Court. The court stated that it approached the question of the patentability of a new combination of old elements "keeping in mind the very exacting standard long required by the Supreme Court" and in this connection it cited, among other decisions of this Court, *Great Atlantic & Pacific Tea Co.* v. *Supermarket Equipment Corp.*, 340 U.S. 147 (1950), and *Cuno Engineering Corp.* v. *Automatic Devices Corp.*, 314 U.S. 84 (1941). The Court of Appeals reviewed the prior art and found that nothing therein suggested the "unique combination of these

old features in such an assemblage as would solve the production, shipping, and operation problems which for years beset the insecticide industry as well as producers of other low viscous liquids." (R. 560.) It found that the novel combination of the sprayer with the insecticide container "which took years in the discovery is neither taught by, nor readily discernible from the application of mechanical skill to the elements of the prior art." It concluded that the patent met "the exacting standard required for a combination of old elements to rise to the level of patentable invention * * *." (R. 560, 561.)

Both the courts below found that the Calmar SS-40 shipper-sprayer infringed the Scoggin patent. Petitioners have not asked this Court to review the decision below on this point. Hence in this Court it must be taken as established that Calmar's SS-40 infringes the Scoggin patent.*

---

*Although petitioners have not tendered the issue of infringement to this Court they nonetheless state in their section entitled "Statement of Facts" that "it was only through an extravagant application of the 'doctrine of equivalents' of *Graver Tank & Mfg. Co.* v. *Linde Air Products Co.*, 339 U.S. 605 (1950), that the courts below found infringement." (Pet. Br. p. 10, n. 12.) This statement is utterly without foundation in the record. The Court of Appeals held that "the challenged features of the alleged infringing Calmar SS-40, the combination of collar to cap seal with attendant hold-down of the sprayer head, are identical with respect to the sealing zone, principle, and purpose of Cook-Bakan 2 and differs only in the shape or form of the * * * sealing surfaces at the collar to cap engagement." The Court of Appeals agreed with the District Court that this difference is "uncontrolling." The Court of Appeals went on to state that "the practical effect of the accused device was to perform substantially the same function in substantially the same manner to obtain the same result as the patent in issue." (R. 562.) Notwithstanding Calmar's efforts to develop evidence of noninfringement the findings of the courts below on the question of infringement have abundant record support.

## SUMMARY OF ARGUMENT

I. Both courts below gave full consideration to the conditions for patentability prescribed by §§ 101-103 of the Patent Act of 1952. The Court of Appeals, after its own analysis, correctly held that the evidence supports the District Court's findings that the Scoggin invention was a new, useful and non-obvious combination.

Under the concurrent findings below, the Scoggin invention is correctly defined as a novel combination of elements operating in conjunction to provide the new and useful result of presenting, for the first time, a shipper sprayer; that is, a sprayer which is integrated with a liquid container to solve both breakage and leakage problems. Such elements, though each individually old, are incapable, in performing their separate functions, of solving the problem or accomplishing the new result outside the combination.

Petitioners' attack on the finding of a novel combination avoids the issue in that it is directed essentially to the uncontested fact that each of the elements of the combination was individually old. Petitioners do not seriously dispute nor in any way convincingly demonstrate any error in the concurrent holding that *the combination* was new. Moreover, the record is replete with Calmar's own acts and statements in direct conflict with any contention that might be made denying novelty in the combination. And, petitioners make no showing of error in the findings below that the prior patents failed to teach or suggest the long awaited answer to the problem which Calmar tried so long to solve.

The holding of the courts below that the invention was useful is supported by evidence that for years the industry

had been searching for a shipper-sprayer and that the Scoggin invention was immediately accepted by the industry as satisfying that need by solving leakage and breakage problems.

There is also abundant evidence to support the holding of the courts below that the Scoggin invention was not obvious to a person possessing ordinary skill in the art. Calmar, the leading manufacturer of sprayers, had tried for ten years, with technicians whom Calmar itself described as "clever", without success to develop a shipper-sprayer. The only result of these efforts was the development of the shipper-sprayer which both courts below held infringed the Scoggin patent.

In short, the evidence fully supports the holding below that the patent covers a "unique combination" which "meets the exacting standard required for a combination of old elements to rise to the level of patentable invention."

II. The evidence of commercial success was relevant to, and was properly considered by the courts below as bearing primarily upon, the contested issue of utility of the invention and only secondarily upon its novelty and non-obviousness. Both the District Court and the Court of Appeals appreciated the limitations of this evidence in dealing with the basic question of patentability and it is plain from their opinions that neither court attached controlling importance to the commercial success of the Scoggin invention. The District Court said that the evidence was not "necessarily determinative" of the issue of invention and the court below merely treated the evidence as corroborative, saying that it "confirms our belief invention was produced."

III. Petitioners' assertion that the decision of the court below is "a debasement of the constitutional stand-

ard of invention" rests upon a general attack on the administration and procedures of the Patent Office and on decisions of certain Courts of Appeal in cases involving other patents. These arguments are irrelevant. The issue here is the validity of the Scoggin patent, not the procedures and practices of the Patent Office and not the validity of other patents. Since the Scoggin patent meets the conditions of patentability described by the Patent Act of 1952 and those laid down by this Court, no constitutional issue is presented. The Petitioners' arguments are wholly unrelated to the particular facts of this case and are calculated to divert attention from the issues herein presented for review. The Court of Appeals for the Eighth Circuit, whose judgment is here under review, has for many years strictly and severely applied the legal standard established by this Court for determining the validity of patents.

## ARGUMENT

### I. The Courts Below Correctly Held That the Invention Met the Requirements for Patentability Established by Congress

Sections 101-103 of the 1952 Patent Act (35 U.S.C. §§ 101-103) establish the requirements for the award of patents to inventors. Section 101 requires that the invention be new and useful. Section 102, insofar as relevant to this case, particularizes the requirement of novelty by requiring that the invention not have been described in a patent granted on an application filed before the invention in question was made. Section 103 provides that a patent shall not issue if the differences between the invention and the prior art "are such that the subject matter as a whole would have been obvious at the time the invention was

made to a person having ordinary skill in the art to which said subject matter pertains."

Both of the courts below considered the application of these requirements to the patent in issue and found that the requirements were met. A consideration of the record requires the conclusion that the courts below were correct.

### A. The Patent in Question Covered a Novel Combination of Known Elements.

The description of the Scoggin patent at pages 8 and 11-15, *supra*, shows that the invention claimed in the patent consisted of a combination of several known elements. Petitioners have attempted in their brief to obscure this fact by selecting certain characteristics or aspects of the combination and arguing that those aspects, considered individually, must be the invention and as such are not patentable. For example, petitioners seek to convey the impression that respondent claims that the location of the seal within the overcap is the invention (Pet. Br. pp. 10, n. 12, 11, 19, 22) or that the space between the overcap and the container cap is the invention (Pet. Br. p. 5) and argue that these things are not patentable. These arguments are directed to a spurious issue. Respondent has never contended that the invention consisted of any one element, characteristic or aspect of the combination but in the combination as a whole. Both the District Court and the Court of Appeals dealt with the patent on this basis. Neither court sustained the validity of the patent on the ground that any one aspect or characteristic of the combination was a patentable invention.* The invention is concisely defined

*Petitioners suggest in their statement of the question presented that the invention covered by the Scoggin patent was the type of seal formed by the junction of the overcap and the threaded collar. (Pet. Br. p. 2.) As we have shown above, this is a misstatement of the issue that this court is called upon to decide.

by the Court of Appeals in the summation as *"a completely integrated device"* (R. 558) in the nature of *"a container with an integrated sprayer-pump"* (R. 557), the "novel 'marriage' of the sprayer with the insecticide container" constituting a "unique combination" (R. 560). (Emphasis ours.)

The District Court similarly held that the claimed invention related to a combination which it described at the outset of its opinion in these words:

> "The patent involves a pump spray device designed to be inserted into bottles or other containers for the dispensing of liquid contained therein. The particular device with which we are concerned here, is a screw cap designed to hold down the plunger of said spray pump when it is inserted in a bottle so as to prevent leakage and breakage while being shipped from processor, or while on the shelves of stores where such commodities are offered for sale." (R. 18.)

And in its discussion of the legality of the patent, the District Court specifically rejected petitioners' suggestion that the claimed invention related simply to the space between the overcap and the container cap and emphasized again that the invention consisted of a combination.

For many years insecticide manufacturers had sought such a combination, that is, a shipper-sprayer that could be inserted in the insecticide container at the time of bottling and shipped and sold as an integrated unit without exterior leakage of the liquid contents of the container or breakage of the sprayer. Until Scoggin's invention, no one had been able to satisfy this demand. Hence, for the most part, insecticide manufacturers were forced to market their products with a sprayer hung on the side of the insecticide container, a technique that had the substantial disadvantages described above.

Scoggin's invention was the breakthrough that permitted insecticide manufacturers successfully to integrate a sprayer with the insecticide container. It could hardly be denied that this was new. No other sprayer on the market at that time, and none marketed at any earlier time, was able to perform the function performed by the Bakan 2 shipper-sprayer. Hence, by any sensible interpretation of the term, Scoggin's invention was novel. Persuasive evidence of its novelty was supplied by petitioner Calmar whose president in November, 1958, in reporting to his department heads on the development of the infringing device referred to "the new SS-40 sprayers" (R. 544) and stated that "everything about the product is new" (R. 545).*

And the application for a patent on this infringing device included a claim that sought patent protection on the identical invention here in issue (R. 283), which was an admission that the invention was deemed to be novel. Obviously such claim could never have been allowed over the Scoggin patent.

It is true, as the courts below recognized, that no single element in the Bakan 2 shipper-sprayer was novel *per se*. But the fact that Scoggin's invention constituted a combination of known elements does not negate its novelty. *Bates* v. *Coe,* 98 U.S. 31, 48 (1878). See also *Hailes* v. *Van Wormer,* 87 U.S. (20 Wall.) 353 (1873); *Parks* v. *Booth,* 102 U.S. 96 (1880); *Loom Co.* v. *Higgins,* 105 U.S. 580 (1881); *Keystone Mfg. Co.* v. *Adams,* 151 U.S. 139 (1894); *Diamond Rubber Co.* v. *Consolidated Rubber Tire Co.,* 220 U.S. 428 (1911).

---

*At the same time the President of Calmar, who is also Vice-President of Drackett, said in describing the "new" sprayers:

> "To be sure the built-in seals described above plus a seal at the over-cap-collar junction are all new. * * * Actually, it is the largest new product project in Calmar's history." (R. 545.)

None of the prior art patents disclosed the shipper-sprayer invented by Scoggin. The Lohse patent did not disclose the idea of a seal above the threads inside the cover cap. In the Lohse patent the seal is formed with a gasket of some substance, apparently leather, which rests on the upper surface of the container cap (R. 26). Sealing on the upper surface of the container cap was not effective in preventing leakage (R. 150, 270-272). This form of seal was not efficient. The record fully supports the trial court's findings that the Lohse patent "would not solve the problem of leakage" (R. 26). And Drackett, Calmar's parent, did not itself consider Lohse as an anticipation—it knew of and specifically referred to the Lohse patent in its patent application on the infringing device.*

The Livingstone patent did not disclose the idea of an overcap that would depress the head of a sprayer; indeed, the Livingstone patent had nothing to do with a sprayer but related to a pouring spout.** (R. 385.)

The Mellon patent (R. 410) did not disclose the idea of a seal formed by the junction of a shoulder in the overcap with a rib on a threaded collar. The seal disclosed in Mellon is located on the upper edge of the bottle neck and was designed to prevent leakage at that point. Mellon does not utilize two caps; indeed, his seal is not unlike that of any conventional container cap. Moreover, the design of Mellon's device precludes establishment of a seal prior to

---

*As we have pointed out above, Drackett's patent application included a claim that sought protection on the identical invention here in issue.

**Here, as in both courts below, petitioners make a point that Livingstone was not cited by the Patent Office. The feature of the particular type of seal which is illustrated (out of context) by petitioners at page 8 of their brief, from Livingstone, is better revealed by the Darley patent (R. 468) which was cited by the Patent Office. In view of this, the fact that the Patent Office did not cite Livingstone is wholly without significance.

its insertion in the container. One major feature of Scoggin's invention is its ability to be installed in the container without disturbing the overcap, thereby permitting maintenance of the seal that prevents leakage to the outside of the container.

In short, while each of the prior patents relied on by petitioners discloses some of the elements of respondent's combination, none discloses all of the elements in combination as invented by Scoggin. Scoggin's combination of the known elements in the form disclosed by his patent was the inventive act that justified the issuance of the patent. That was the basis of the decision of the court below which specifically found that the patent covers a "unique combination" that "meets the exacting standard required for a combination of old elements to rise to the level of patentable invention by fulfilling the long felt need with an economical, efficient, utilitarian apparatus which achieved novel results * * *." (R. 561.)

Petitioners make a frontal assault on this finding and assert that "the Scoggin patent did not even introduce a really new combination of elements" (Pet. Br., p. 22). They attempt to support this assertion by reliance on language extracted from the opinions of this Court in cases dealing with other devices not similar to the Scoggin invention, including among others *Lincoln Engineering Co.* v. *Stewart-Warner Corp.*, 303 U.S. 545 (1938); *Great Atlantic & Pacific Tea Co.* v. *Supermarket Equipment Corp.*, 340 U.S. 147 (1950); *Toledo Pressed Steel Co.* v. *Standard Parts, Inc.*, 307 U.S. 350 (1939); and *Cuno Engineering Corp.* v. *Automatic Devices Corp.*, 314 U.S. 84 (1941).

The court below did not disregard the teaching of these decisions. It cited these cases and recognized them as laying down "the exacting standard" that the patent in issue

required meeting. Its finding that the Scoggin patent meets that "exacting standard" is fully supported by the record and in no degree is inconsistent with the general principles previously announced by this Court.

Petitioners' attack on the finding rests upon a misapplication of the language of this Court to the facts of the present case. The statements quoted by petitioners cannot reasonably be read as meaning that in a combination patent each old element considered separately must perform some function in the combination different from the function it would perform as a separate device. Any such reading of the language would mean that no combination patent could ever meet the test of novelty. This Court has never laid down any such principle of law. The opinion in *Great Atlantic & Pacific Tea Co.* v. *Supermarket Equipment Corp., supra* at 150-151, indicates that it had no intention of doing so.*

We submit that the opinions of this Court should be read as meaning that a combination of old elements may be patentable if the joint operation of the old elements in the combination performs or produces a new or different function or operation than was performed by any of the

---

*If the prior statements of the Court could be read as laying down a general rule that no combination of old elements could be patentable, the question might arise whether any such rule of law could survive the passage of the Patent Act of 1952. The requirements for patentability set forth in Sections 101-103 of the statute do not draw any distinction between patents covering exclusively combinations of old elements and other patents. These provisions clearly indicate that a combination of old elements is patentable if it is novel, useful and the subject matter is not obvious. We believe, therefore, that it is unnecessary to consider in this case the question referred to above because this Court has never laid down any rule of law that a combination of old elements is not patentable.

parts separately.* This is the plain meaning of this Court's statement in *Great Atlantic & Pacific Tea Co.* v. *Supermarket Equipment Corp., supra* at 151, that:

> "The negative rule accrued from many litigations was condensed about as precisely as the subject permits in Lincoln Engineering Co. v. Stewart-Warner Corp., 303 U.S. 545, 549: 'The mere aggregation of a number of old parts or elements which, in the aggregation, perform or produce no new or different function or operation than that theretofore performed or produced by them, is not patentable invention.'"

On this basis the Scoggin patent clearly meets the standard laid down by this Court. The old elements in the combination perform in conjunction a function different from and greater than the functions they performed in the separate identities. Here the combination of the overcap, the threaded collar, and the seal above the collar threads formed by the junction of the overcap shoulder and collar rib with the sprayer and container cap permits for the first time integration of the composite unit with the container. This result which was obtained by the combination invented by Scoggin manifestly could not be obtained through the separate use of the individual elements of Scoggin's invention. In short, this is a case in which the combination of the old elements performs or produces a "new or different function or operation than that theretofore performed or

---

*Respondent has never contended, as petitioners appear to suggest, that a combination of old elements is patentable merely because it is new and useful. (Pet. Br. pp. 24-25.) The invention must also meet the test laid down in Section 103 of the Patent Act of 1952, i.e., that the subject matter of the invention would not have been obvious at the time the invention was made to a person having ordinary skill in the art to which the subject matter pertains. The language quoted by petitioners from *Cuno Engineering Corp.* v. *Automatic Devices Corp.*, 314 U.S. 84, 90 (pp. 24-25 of their brief) is directed to this point and not to the question of novelty. The application of the standard prescribed in Section 103 to the Scoggin patent is discussed at pages 31-35 *infra*.

produced by them," *Lincoln Engineering Co.* v. *Stewart-Warner Corp.*, 303 U.S. 545, 549; the conjunction on concert of known elements contributes "something" which "exceeds the sum of its parts," *Great Atlantic & Pacific Tea Co.* v. *Supermarket Equipment Corp.*, 340 U.S. 147, 152; and the old elements perform a joint function, they do not merely "serve separately" as they would individually, *Toledo Pressed Steel Co.* v. *Standard Parts, Inc.*, 307 U.S. 350.

**B. The Shipper-Sprayer in Issue Clearly Had Significant Commercial Utility.**

The record fully supports the findings below that the shipper-sprayer discovered by Scoggin was "useful" within the meaning of Section 101 of the Patent Act of 1952 and hence met that requirement of patentability.

For many years insecticide manufacturers had been subject to a pressing need for a sprayer that could be integrated into an insecticide container. The old method, by which the sprayer was attached to the container by means of a plastic or cardboard holder, had many drawbacks. As we have explained at pages 4-7, *supra*, it invited loss or pilferage of the sprayer, it resulted in breakage of the sprayer in shipment, it was uneconomical to assemble at the bottling plant, and it created problems of loss, damage, and special handling for the retailer. Because of the expanding availability of aerosol containers to package insecticides, sellers of liquid insecticides were at a competitive disadvantage as long as they remained unable to market their products with an integrated sprayer system. Various alternative devices which Calmar had attempted to develop had proved unsuccessful.

Respondent's shipper-sprayer was designed to and did solve the problems presented by the old method of hanging

the sprayer on the liquid container, thereby eliminating the commercial advantage held by sellers of insecticides that were marketed in aerosol containers. The utility of the invention was demonstrated by the immediate efforts of petitioner Calmar to copy it, notwithstanding the fact that Calmar had only shortly before introduced a bayonet type of sprayer (the S-25-LP) on the market.* It was also demonstrated by the fact that in the first twelve months that the Scoggin invention was on the market 11,000,000 of them were sold.

Petitioners advance no basis that would justify the rejection of the finding of the lower courts on the issue of usefulness. They have attempted to revive in this Court their argument that the Scoggin patent did not completely solve the problem of leakage. This is a pure issue of fact which was resolved against petitioners by the trial court in findings that were affirmed by the court below. The record fully supports those findings. The best that can be said for petitioners' contention, which is based upon meager evidence, that the Scoggin invention did not provide a "perfect seal" (Pet. Br., pp. 8, 23, n. 30) is that it rests upon an alleged conflict in the evidence. That conflict, if it exists, provides no justification for trial of the issue *de novo* in this Court.**

---

*Calmar's S-25-LP sprayer was utterly unsuccessful in solving the problems to which Scoggin's invention was directed. Calmar's president testified that his company experienced "grievous" results with the sprayer, and finally withdrew it from the market.

**Among other things, the trial court found that with respect to 15,000,000 of the Scoggin shipper-sprayers that Cook had used on its products and sold to consumers it received not more than 100 complaints.

This Court has held that the fact that a patented device may in some instances be imperfect in its operation is not a reason for invalidating the patent if the device otherwise meets the standards of patentability. *Telephone Cases*, 126 U.S. 1, 535 (1888); *Mergenthaler Linotype Co.* v. *Press Publishing Co.*, 57 Fed. 502, 505 (C.C. S.D. N.Y. 1893); *Hildreth* v. *Mastoras*, 257 U.S. 27, 34 (1921).

It is significant that most of the petitioners' discussion of the question of usefulness is not directed to demonstrating that the courts below were wrong in finding that the Scoggin shipper-sprayer was useful but rather to the assertion that the courts attached excessive importance to its commercial success. We shall show at pages 35-38, *infra*, that the decisions below did not turn on the commercial success of the invention. For present purposes it is enough to observe that commercial success is clearly relevant on the issue of the usefulness of the invention and that the kind of proof of commercial success that was made in this case is sufficient to demonstrate that the invention met that particular requirement.

### C. Respondent's Invention Was Not Obvious to a Person Having Ordinary Skill in the Art.

Section 103 of the Patent Act of 1952 provides in substance that a patent may not be obtained if the differences between the subject matter of the invention and the prior art are such that the subject matter as a whole would have been obvious at the time the invention was made to a person having ordinary skill in the art to which the subject matter pertained. This statutory provision embodies a condition of patentability that has been expressed in one way or another in decisions of this Court since as early as *Hotchkiss* v. *Greenwood*, 52 U.S. (11 How.) 248 (1850). See also *Pearce* v. *Mulford*, 102 U.S. 112, 118 (1880).

Petitioners argue that the Scoggin patent does not meet the condition of patentability now set forth in Section 103 and in support of this argument cite decisions, notably *Cuno Engineering Corp.* v. *Automatic Devices Corp.*, 314 U.S. 84, in which this Court has reversed decisions upholding the validity of patents on the ground that the lower court had failed to recognize that "to obtain the privileged position

of a patent more ingenuity must be involved than the work of a mechanic skilled in the art" (Ibid. at 90). Petitioners assert that the lower courts in this case committed the same error (Pet. Br. 20, 21, 23-25).

Petitioners' contention that the decisions below disregarded and failed to apply the condition of patentability set out in Section 103 is plainly erroneous. Both the District Court and the Court of Appeals recognized and applied the correct rule of law. The Court of Appeals stated:

> "This novel 'marriage' of the sprayer with the insecticide container which took years in the discovery is neither taught by, nor readily discernible from the application of mechanical skill to the elements of the prior art."* (R. 560.)

The question presented, therefore, is not whether the courts below applied an erroneous legal standard but whether the findings of fact made by the District Court and affirmed by the Court of Appeals are supported by the record. Petitioners' arguments on that question consist largely of assertions which are unsupported by the record and which are destroyed by undisputed evidence with respect to the activities of Calmar itself.

The record shows that Calmar for a period of ten years devoted time, money and effort in an attempt to solve the very problem that remained unsolved until Scoggin's invention was made. These labors were more than intermittent. The record shows that Calmar experimented with a variety of different devices in an unsuccessful effort to solve the problem of creating a shipper-sprayer that could be incorporated with liquid containers. To name a few of

---

*The District Court set forth the text of Section 103 and then stated that under that section the question was whether the combination covered by the Scoggin patent was "merely the result of mechanical skill." The court discussed this question in the ensuing three paragraphs of its opinion and found that the patent met the conditions of Section 103 (R. 25).

these devices, Calmar's technicians tried (1) a cellulose cover to be installed over the top of the sprayer to seal it, (2) a form of bayonet type device—the S-25-LP, (3) a flat back bottle that could be shipped on its back in order to avoid leakage, (4) an installation of a film bag (or boot) around the lower portion of the sprayer, (5) a cap for installation over the nozzle of the sprayer, (6) a plug to be installed in the end of the sprayer tube. All of these efforts came to nothing. Not one resulted in a product that would permit the integration of a shipper-sprayer with a container without leakage of the liquid or breakage of the sprayer. It was not until Calmar produced a copy* of the Scoggin invention that it had the answer to the problem with which its technicians had wrestled for ten years.

The Court of Appeals concluded its review of what it called the "undisputed factual background" (R. 556) with these words:

> "Despite the extensive research and experimentation given the problem by Calmar, Cook and others for a period of some ten years, no solution was forthcoming until conception and commercialization of the Cook-Bakan 2, described by its inventor as a 'Pump-Type Liquid Sprayer Having Hold-Down Cap.'" (R. 557.)

In these circumstances one of two conclusions must be true. Either the technicians employed by Calmar to solve the problem did not possess ordinary skill in the art or the subject matter of the Scoggin patent was not obvious

---

*The lower courts' determination of infringement is not here contested. The Court of Appeals said that:

> "Exercising our appellate prerogative in a patent case to interpret the exhibits for ourselves, we are constrained to agree with the trial court's statement that 'Upon close inspection of the devices, it is difficult to see how they could be much more similar and yet have any different features'." (R. 562.)

at the time the invention was made to persons possessing such skill. For good reason petitioners have not embraced the first of these alternatives. Nothing in the record provides the slightest support for any suggestion that the technicians employed by Calmar were not skilled in the art. The president of Calmar himself testified that the company had "for a good many years a number of good, clever people" engaged in research efforts (R. 306). These persons included Andrew M. Martin, who in 1944 had obtained two patents relating to the original plastic sprayer (R. 334), and Rex C. Cooprider, who with D. F. Corsette applied for the patent (R. 529) on the device held by the courts below to have infringed the Scoggin patent. Corsette, who held Bachelor's and Master's degrees in engineering, and who had formerly been in the employ of a company engaged in the construction of automatic assembly machines for sprayer devices, was brought in to Calmar as "a skilled, capable engineer, because we were faced with real problems with our own customers, our own products * * *" (R. 306) after the efforts of its research staff had failed to produce a shipper-sprayer.

Against these facts, the *ex post facto* and *post litem* assertions of Calmar that the Scoggin invention was obvious are entitled to no weight whatever. This Court has often held that the fact that an invention when viewed after the event is asserted to be, or may even appear to be, obvious is not enough to negative patentability. *Goodyear Tire & Rubber Co., Inc.* v. *Ray-O-Vac Co.*, 321 U.S. 275, 279 (1944); *Loom Co.* v. *Higgins*, 105 U.S. 580, 589, 591; *The Barbed Wire Patent*, 143 U.S. 275, 277, 283 (1892); *Krementz* v. *S. Cottle Co.*, 148 U.S. 556 (1893); *Expanded Metal Co.* v. *Bradford*, 214 U.S. 366, 381 (1909); *Diamond Rubber Co.* v. *Consolidated Rubber Tire Co.*, 220 U.S. 428, 434-435.

We submit that there could be no stronger proof that the Scoggin invention was not obvious than this showing that the major company producing plastic sprayers, employing technicians possessing extraordinary skill in the art, was unable to solve the problem despite continuous efforts over a ten-year period to do so. Precisely that showing was made in this case. That showing distinguishes this case from the prior decisions of this Court cited by petitoners and establishes that the Scoggin patent satisfied the requirements set forth in Section 103 and the standards set forth in the decisions of this Court. This case is governed by the rule stated in *Expanded Metal Co.* v. *Bradford, supra* at 381:

> "It may be safely said that if those skilled in the mechanical arts are working in a given field and have failed after repeated efforts to discover a certain new and useful improvement, that he who first makes the discovery has done more than make the obvious improvement which would suggest itself to a mechanic skilled in the art, and is entitled to protection as an inventor."

See also *Goodyear Tire & Rubber Co., Inc.* v. *Ray-O-Vac Co., supra.*

**II. The Decisions Below Do Not Substitute "Commercial Success for Invention."**

The petitioners contend that "it is impossible to find any real basis for the decision below other than the 'commercial success' of respondent's sprayer" and that the courts below, therefore, erroneously substituted the concept of commercial success for the concept of invention (Pet. Br. p. 27). In support of this argument petitioners cite decisions of this Court for the proposition that commercial success alone is not determinative of the question of patentability. This general proposition is not in dispute and it is there-

fore unnecessary to discuss the decisions that petitioners say establish it. The fact is that an analysis of the decisions of the courts below—which petitioners notably failed to undertake—shows that those decisions did not rest on that ground primarily or ignore the proper requirements of patentability.

The opinion of the Court of Appeals begins its consideration of the validity of the patent by recognizing the "exacting standard" that this Court has laid down for determining the patentability of a combination of old elements. It then proceeded to consider the prior art—contrary to petitioners' assertion that it did not do so (Pet. Br. p. 29, n. 37)—and then moved on to consider whether the subject matter of the Scoggin patent was "readily discernible from the application of mechanical skill to the elements of the prior art." It was only after finding that it was not so discernible that the Court of Appeals mentioned the matter of commercial success. It is significant that the reference to commercial success was made in the context of the issue whether the device produced "new and useful results." It is also significant that the Court of Appeals, in referring to the evidence of industry and public acceptance, stated that it "confirms our belief that invention was produced," thereby indicating that the evidence was regarded simply as corroboration of a finding made primarily on other grounds.

Proof of commercial success is clearly relevant to the question whether a device is new and useful. *Temco Elec. Motor Co.* v. *Apco Mfg. Co.*, 275 U.S. 319 (1928); *Forestek Plating & Mfg. Co.* v. *Knapp-Monarch Co.*, 106 F.2d 554 (6th Cir. 1939); *Ezee Stone Cutter Mfg. Co.* v. *Southwest Industrial Products*, 262 F.2d 183 (8th Cir. 1958); *Reiner* v. *I. Leon Co.*, 285 F.2d 501, 503 (2d Cir. 1960). The fact that the Court of Appeals properly considered the evidence of

commercial success for that purpose does not demonstrate that its decision rested primarily on that consideration.

The opinion of the District Court shows affirmatively that it recognized that commercial success is not controlling on the issue of patentability. That court, although referring to the evidence relating to commercial success in its detailed statement of facts developed at the trial, made only one reference to commercial success in its discussion of the legal issues. In the course of this discussion it said:

> "Commercial success or acceptance is an element that may be taken into consideration in determining the question of invention, but is not necessarily determinative of the issue." (R. 28.)

There is no rational basis on which the court's explicit statement that evidence of commercial success is "not necessarily determinative of the issue" can be twisted into meaning that it regarded that evidence as decisive and controlling.

A reading of the opinion of the District Court as a whole shows it did not rely exclusively, primarily, or even substantially on evidence relating to commercial success. Its finding that the subject matter of the Scoggin patent was new and useful and not obvious to a person having ordinary skill in the art rested on facts of a different character. It relied, for example, upon evidence that for years manufacturers of insecticides and of sprayers for liquid containers had tried unsuccessfully to solve the problem of leakage and breakage in shipment; that specifically Calmar had attempted to solve this problem and had devised numerous contrivances that were unsuccessful; that the Scoggin invention successfully solved the problem of leakage and breakage in shipment, and that the solution achieved by Scoggin required more than the application of simple mechanical skill.

No doubt some of these facts are also relevant to the question of commercial success but the presence of commercial success is not a bar to patentability when the relevant statutory standards are otherwise satisfied. As Judge Learned Hand stated in *Reiner* v. *I. Leon Co., supra* at 503:

> "We are of course acutely aware of the constant reminders in the books that the sale of a patented device is not alone a measure of its invention, and we accept that conclusion. Nevertheless, great commercial success, *when properly scrutinized,* may be a telling circumstance." (Emphasis supplied.)

Petitioners themselves in the courts below squarely raised the issue of commercial success by contending that the Scoggin invention was not useful because it did not solve the problem of leakage and by devoting a substantial part of their evidence to that contention. In these circumstances, petitioners are hardly in a position now to contend that the courts below erred in considering the evidence of commercial success for the purpose of resolving the issue of utility and for whatever relevance it might otherwise have to the question of patentability. The courts below "properly scrutinized" this evidence. Their opinions show that they did not regard the evidence as controlling or decisive.

### III. The Decision of the Court Below Did Not Countenance "A Debasement of the Constitutional Standard of Invention"

Petitioners devote the opening portion of their argument (Pet. Br. pp. 14-22) to the assertion that the decisions below countenance "a debasement of the constitutional standard of invention." To support this line of argument petitioners attack the administration and the procedures of the Patent Office (Pet. Br. pp. 14, 18-19); they attack

the decisions of other Circuit Courts of Appeal in cases involving other patents (Pet. Br. pp. 19-20); and, oddly enough, in view of their own economic position and power, they suggest by innuendo that this case raises some problem of restraint of trade or monopoly under the antitrust laws (Pet. Br. pp. 15, 30). When these assertions are viewed in the context of the issues presented here their irrelevance is obvious.

The issue in this case is the validity of a particular patent issued to Scoggin on January 27, 1959. We have shown in the preceding portions of our argument that the facts of record fully support the findings made by the District Court that the subject matter of the patent is new, useful and not obvious to one having ordinary skill in the art. In making these findings, the District Court applied the legal standards prescribed by Sections 101-103 of the Patent Act of 1952. In affirming these findings the Court of Appeals specifically recognized and applied what it described as the "exacting standard" laid down by this Court for determining the validity of combination patents. Since the courts below recognized and applied the correct rules of law, the only issue in this case is whether the findings of fact that the subject matter of the patent is new, useful and unobvious are supported by the record.

Petitioners have not suggested either here or in the courts below that the provisions of the Patent Act of 1952 are unconstitutional.* Since the courts below applied the provisions of that statute and in doing so complied with the principles of law laid down by this Court, this case raises no

*Petitioners appear to concede that at least the last sentence of Section 103 of the Patent Act of 1952 was meant to correct what petitioners describe as "an extravagant interpretation" of certain language in the opinion of this Court in *Cuno Engineering Corp. v. Automatic Devices Corp.*, 314 U.S. 84, 89 (Pet. Br. p. 21, n. 19). Petitioners do not suggest that when Congress made this correction it exceeded its constitutional powers.

question of constitutional law but turns simply on the question of whether the findings of fact made by the District Court and affirmed by the Court of Appeals are supported by the record.

In short, what is involved here is the validity of the particular patent in issue, not the administration and procedures of the Patent Office considered in gross and not whether other Circuit Courts of Appeal have improperly held other patents to be valid. No extensive analysis is required to show the logical irrelevance of petitioners' assertion with respect to these extraneous matters.

The fact that the Patent Office issued approximately 50,000 patents in 1959 has no logical bearing on the question whether any particular patent issued in that year is invalid. There is no doctrine in law or logic of invalidity by statistical association.

The assertion, if true, that other Circuit Courts of Appeal have erroneously upheld the validity of other patents is likewise irrelevant. Petitioners seem to believe that it would be proper for this Court to invalidate the Scoggin patent as a means of disciplining and admonishing other Circuit Courts of Appeal for departing from correct legal principles. This is a curious view of the nature of judicial process. We assume with confidence that, even if this Court should agree with petitioners that in other cases involving other patents and other facts, some of the Courts of Appeal may have erroneously upheld the validity of those patents, it will not allow that view to influence the decision herein in any way whatever.

Even if it is assumed that it would be proper for this Court in this case to consider whether some of the Circuit Courts of Appeal stand in need of admonition and discipline, we think it appropriate to observe that the Court of Appeals

for the Eighth Circuit is not among them. It is significant that in the parade of horribles set out by petitioners at pages 19 and 20 of their brief, they have not cited a single decision by the Court of Appeals for the Eighth Circuit. The fact is that the record of that court in dealing with patent cases shows that it has not been lax or lenient in applying the legal standards announced by this Court.

In the ten years, 1949 through 1958, the Court of Appeals for the Eighth Circuit held 23 patents invalid and only 3 patents valid and infringed. The ratio of the decisions in the Eighth Circuit is thus nearly eight to one against validity. The overall ratio for all Circuit Courts of Appeal in the same period is nearly three to one against validity.* Since 1958 the Court of Appeals for the Eighth Circuit has held eleven patents invalid for lack of invention, including the patent which is now before this Court in *Graham* v. *John Deere Co.*, No. 11, October Term, 1965.** In the same period of time, apart from the instant case, the

---

*An Analysis of Patent Litigation Statistics, Staff Report, Subcommittee on Patents, Trademarks and Copyrights, Senate Judiciary Committee, 86th Congress, 2nd Sess., 1961.

**_Johnson Fare Box Co._ v. _National Rejectors, Inc._, 269 F.2d 348 (8th Cir. 1959).

_Caldwell_ v. _Kirk Mfg. Co._, 269 F.2d 506 (8th Cir. 1959).

_John Blue Co._ v. _Dempster Mill Mfg. Co._, 275 F.2d 668 (8th Cir. 1960).

_Selmix Dispensers, Inc._ v. _Multiplex Faucet Co._, 277 F.2d 884 (8th Cir. 1960).

_Syracuse_ v. _H. Daust Mfg. Co._, 280 F.2d 377 (8th Cir. 1960).

_Scherr_ v. _National Bio-Test, Inc._, 301 F.2d 901 (8th Cir. 1962).

_McGraw-Edison Co._ v. _Central Transformer Corp._, 308 F.2d 70 (8th Cir. 1962).

_Collins_ v. _Owen_, 310 F.2d 884 (8th Cir. 1962).

_Rota-Carb Corp._ v. _Frye Mfg. Co._, 313 F.2d 443 (8th Cir. 1963).

_Bros Inc._ v. _Browning Mfg. Co._, 317 F.2d 413 (8th Cir. 1963).

_John Deere Co. of Kansas City_ v. _Graham_, 333 F.2d 529 (8th Cir. 1964).

Court of Appeals has sustained the validity of only two patents where invention was in issue.*

An examination of the opinions of the Court of Appeals for the Eighth Circuit shows that it has strictly enforced the requirements for patent validity laid down by this Court in such cases as *Cuno Engineering Corp.* v. *Automatic Devices Corp.*, 314 U.S. 84 (1941) and *Great Atlantic & Pacific Tea Co.* v. *Supermarket Equipment Corp.*, 340 U.S. 147 (1950). It is also to be noted that the Court of Appeals has not in any way modified or relaxed these requirements since the passage of the Patent Act of 1952. See *Steffan* v. *Weber Heating & Sheet Metal Co.*, 237 F.2d 601 (8th Cir. 1956) and *John Blue Co.* v. *Dempster Mill Mfg. Co.*, 275 F.2d 668 (8th Cir. 1960).**

---

*Ezee Stone Cutter Mfg. Co.* v. *Southwest Industrial Products*, 262 F.2d 183 (8th Cir. 1958).

*Wm. F. Crome & Co.* v. *Vendo Co.*, 299 F.2d 852 (8th Cir. 1962).

**In 1960 in the *John Blue* case, the Court of Appeals stated:

"In applying 35 U.S.C.A. § 103, this court follows the standards of patentability set out by the United States Supreme Court in Great Atlantic & Pacific Tea Co. v. Supermarket Equipment Corp., 1950, 340 U.S. 147 * * *." (275 F.2d at 671.)

Many years ago the Court of Appeals employed language, similar to that used in 35 U.S.C. 103 of the Patent Act of 1952, which it adopted from *Pearce* v. *Mulford*, 102 U.S. 112, 118 (1880), wherein this Court said that an improvement:

"* * * must involve something more than what is obvious to persons skilled in the art to which it relates."

The court held the patent there under review invalid, stating:

"A patent must be the creation of inventive faculty and imagination. There must be something more than is obvious to persons skilled in the art. Mere novelty and utility is not invention, and cannot be a substitute therefor. Neither is ingenuity invention. A patent monopoly rests upon inventive genius and the line between invention and mechanical skill is ofttimes a close one, almost impossible to discern." *Tropic-Aire* v. *Sears, Roebuck & Co.*, 44 F.2d 580, 588 (8th Cir. 1930). See also, *H. D. Hudson Mfg. Co.* v. *Standard Oil Co.*, 60 F.2d 377 (8th Cir. 1932).

Petitioners' references to monopoly and restraint of trade are similarly irrelevant in the context of this case. In view of the size and economic power of petitioners it could hardly be suggested that validation of the Scoggin patent will in any way restrict their competitive capabilities. In these circumstances, no general discussion of the relationship between the patent laws and the prevention of monopoly or the preservation of free competition seems necessary or appropriate. It is appropriate to observe, however, that, as the facts of the instant case disclose, a patent is not invariably a device for increasing the concentration of economic power but may well serve as a shield for the small businessman against the economic power of his larger diversified and integrated competitors.* In this connection, it is difficult to avoid the impression that petitioners' references to the antitrust law as well as their attacks upon the Patent Office and the Circuit Courts of Appeal are an attempt to cloak in the aura of the public interest what is essentially a piece of deliberate commercial piracy.

---

*See Dr. Vannevar Bush, Study No. 1, made pursuant to Senate Resolutions 92 and 167 of the 84th Cong., 2d Sess., 1956, p. 19; Briskin, *An Area of Confusion: Patents Monopolies and the Antitrust Laws*, 49 A.B.A.J. 661, 663 (1963); Malley, *Patent Antitrust Problems and the Attorney General's Report*, 24 Geo. Wash. L. Rev. 20, 25 (1955); Edwin H. Land, *The Role of Patents in the Growth of New Companies*, 41 J. Pat. Off. Soc'y 502, 506 (1959); George E. Frost, *The Role of the Law in Research Competition*, 3 P.T.C.J. Res. & Ed. 93, 95 (1959); and Irving H. Siegel, *Patents and Other Factors in the Creation and Growth of Small Firms: Preliminary Synthesis*, 3 P.T.C.J. Res. & Ed. 47 (1959) (Proceedings 1959 Annual Public Conference of the Patent, Trademark and Copyright Research Institute, George Washington University).

## CONCLUSION

For the reasons stated above, the judgment of the Court of Appeals should be affirmed.

Respectfully submitted,

GORDON D. SCHMIDT,
HOVEY, SCHMIDT, JOHNSON & HOVEY,
1816 Federal Reserve Bank Building,
Kansas City, Missouri,

CARL E. ENGGAS,
WATSON, ESS, MARSHALL & ENGGAS,
1006 Grand Avenue,
Kansas City, Missouri,

*Attorneys for Respondent.*

Of Counsel:
HUGH B. COX,
CHARLES A. MILLER,
Union Trust Building,
Washington, D.C.

## APPENDIX

The relevant provisions of the Patent Act of 1952, 35 U.S.C. §§ 101, 102 and 103, are as follows:

### § 101. Inventions patentable

Whoever invents or discovers any new and useful process, machine, manufacture, or composition of matter, or any new and useful improvement thereof, may obtain a patent therefor, subject to the conditions and requirements of this title.

### § 102. Conditions for patentability: novelty and loss of right to patent

A person shall be entitled to a patent unless—

(a) the invention was known or used by others in this country, or patented or described in a printed publication in this or a foreign country, before the invention thereof by the applicant for patent, or

(b) the invention was patented or described in a printed publication in this or a foreign country or in public use or on sale in this country more than one year prior to the date of the application for patent in the United States, or

(c) he has abandoned the invention, or

(d) the invention was first patented or caused to be patented by the applicant or his legal representatives or assigns in a foreign country prior to the date of the application for patent in this country on an application filed more than twelve months before the filing of the application in the United States, or

(e) the invention was described in a patent granted on an application for patent by another filed in the United States before the invention thereof by the applicant for patent, or

(f) he did not himself invent the subject matter sought to be patented, or

(g) before the applicant's invention thereof the invention was made in this country by another who had not abandoned, suppressed, or concealed it. In determining priority of invention there shall be considered not only the respective dates of conception and reduction to practice of the invention, but also the reasonable diligence of one who was first to conceive and last to reduce to practice, from a time prior to conception by the other.

**§ 103. Conditions for patentability: non-obvious subject matter**

A patent may not be obtained though the invention is not identically disclosed or described as set forth in section 102 of this title, if the differences between the

subject matter sought to be patented and the prior art are such that the subject matter as a whole would have been obvious at the time the invention was made to a person having ordinary skill in the art to which said subject matter pertains. Patentability shall not be negatived by the manner in which the invention was made.

ROACH
KILL

ANT
KILL

Office-Supreme Court, U.S.
FILED
SEP 28 1965
JOHN F. DAVIS, CLERK

IN THE

# Supreme Court of the United States

OCTOBER TERM, 1965

No. 37

CALMAR, INC.,

*Petitioner,*

—v.—

COOK CHEMICAL COMPANY,

*Respondent.*

ON WRIT OF CERTIORARI TO THE UNITED STATES COURT OF APPEALS FOR THE EIGHTH CIRCUIT

## REPLY BRIEF FOR PETITIONER

VICTOR H. KRAMER
DENNIS G. LYONS
1229 Nineteenth Street, N.W.
Washington, D. C. 20036
*Attorneys for Petitioner*

*Of Counsel:*

FRANCIS G. COLE
WATSON, COLE, GRINDLE & WATSON
Washington, D. C.

ARNOLD, FORTAS & PORTER
Washington, D. C.

September, 1965

IN THE

# Supreme Court of the United States

OCTOBER TERM, 1965

No. 37

CALMAR, INC.,

*Petitioner,*

—v.—

COOK CHEMICAL COMPANY,

*Respondent.*

ON WRIT OF CERTIORARI TO THE UNITED STATES COURT OF APPEALS FOR THE EIGHTH CIRCUIT

## REPLY BRIEF FOR PETITIONER

### I

The brief for respondent clearly illumines the fundamental error of the courts below, by following the same erroneous path. That fundamental error was the viewing of the issue of the validity of the Scoggin patent in terms of whether the device produced by respondent under it amounted to a commercial innovation, rather than in terms of whether the Scoggin patent disclosed an "invention." But under the statute and the Constitution, the only question is whether the Scoggin patent disclosed an invention: "our patent system is *not* written in these terms [the terms of commercial exploitation and innovation]. The criterion for patenting is the creating of an 'invention.' . . . " Stedman, *The U.S. Patent System and Its Current Problems,*

42 Texas L. Rev. 450, 454 (1964). See 35 U.S.C. §§ 101, 102, 103.

The respondent seeks to conceal this complete reliance on commercial innovation as a substitute for invention, but it shines through its brief. Two striking illustrations may be given. *First,* the brief manages to discuss what the "invention" embraced by the Scoggin patent is supposed to be without ever once quoting from or referring to the claims of Scoggin's patent.— In fact, from a reading of respondent's brief, the well-known man from Mars would not know that there were any such things in the patent system as the patent "claims," and he would be thunderstruck to realize that their time-honored function is to define what the invention is supposed to be: "The specification shall conclude with one or more claims particularly pointing out and distinctly claiming the subject matter which the applicant regards as his invention." 35 U.S.C. § 112. See *Great Atlantic & Pacific Tea Co.* v. *Supermarket Equipment Corp.,* 340 U.S. 147, 149 (1950); *United Carbon Co.* v. *Binney & Smith Co.,* 317 U.S. 228 (1942).

*Second,* the brief, for understandable reasons, virtually avoids any reference whatsoever to the extensive relevant prior art, which conclusively refutes the presence of any "invention" in the reshuffling of elements embraced in the Scoggin bottle cap patent. Scarcely over a page (Res. Br., pp. 25-26) is spent on all the prior art. But, of course, the prior art has always been the dominant factor in a consideration of whether a patent embraces an invention—or, if put in terms of Section 103 of the Patent Code, whether "the differences between the subject matter sought to be patented *and the prior art* are such that the subject matter as a whole would have been obvious at the time the invention was made to a person having ordinary skill in the art

to which said subject matter pertains." (Emphasis supplied.)

The classic approach to the question of invention is illustrated by the leading patent decisions of this Court. The approach followed in these decisions is to set the claims of the patent in suit against the prior art and to arrive at a conclusion whether any advance over the prior art amounting to an "invention" is disclosed in the invention covered by the claims. See *Electric Cable Joint Co.* v. *Brooklyn Edison Co.*, 292 U.S. 69 (1934); *Toledo Pressed Steel Co.* v. *Standard Parts, Inc.*, 307 U.S. 350 (1939); *Marconi Wireless Telegraph Co.* v. *United States*, 320 U.S. 1 (1943); *Jungersen* v. *Ostby & Barton Co.*, 335 U.S. 560 (1949); and *Great Atlantic & Pacific Tea Co.* v. *Supermarket Equipment Corp.*, 340 U.S. 147 (1950). Instead of setting the claims of the Scoggin patent against the prior art, the respondent—while amazingly disclaiming any substantial reliance on the factor of "commercial success" (Res. Br., pp. 35-37)—devotes its brief to a commercial history of the activities of the manufacturers of insecticides, as though what they had done were synonymous with the "prior art." (Res. Br., pp. 3-11; 22-24; 29-35) The discussion boils down to the asserted fact that respondent was the first to mass-market an insecticide "package" which offered a plastic finger-operated liquid dispenser covered by a plastic cap; and to the assertion that in so doing, respondent supposedly overcame various commercial "problems." Even assuming that this was so,[1] the question remains—and it cannot be

[1] The respondent's "success story" omits the all-important final chapter, in any event. As we have developed in our main brief, the next commercial development after the introduction of the Cook bottlecap, followed by the Calmar SS-40, was for Cook to admit the imperfection in the seal in its bottlecap and change it to adopt an external seal of the sort used by Calmar; and later to

answered affirmatively—whether the solution to these commercial problems took the form of an "invention"—which happens to be the only type of solution which the patent laws reward, or constitutionally could reward, with their seventeen-year monopoly.

To return in a little more depth to these two illustrations of the respondent's basic fallacy:

1. *Redefinition of the invention in terms of the commercial device.*—Respondent's brief is most instructive in its definition of what the "invention" disclosed in the Scoggin patent was. As noted above, respondent does not feel limited by the settled rule that the claims of the patent define the invention, since it never bothers to mention the very narrow claims which were finally allowed by the Patent Office, the central one of which we set forth in the margin.[2] Instead, the respondent's definition of the inven-

---

adopt Calmar's system of internal seals. (Pet. Br., pp. 8-9) (The internal seals of the Calmar SS-40 were, of course, the real solution to any "shipper-sprayer" problem.)

[2] "In a closure assembly for an open-top container having a perforated cap over said open top thereof mounting a spray unit including a barrel provided with a tubular extension passing coaxially upwardly through the perforation in said cap, a plunger reciprocably carried by the barrel and normally extending therebeyond and a spray head on the upper end of the plunger above said extension, the combination with said spray unit of an annular retainer telescoped over and secured to the extension above said cap and provided with external, circumferentially disposed screw threads and an annular, continuous segment at the upper part of the retainer above said screw threads, and a cup-shaped hold-down member housing the head and holding the plunger depressed at substantially the innermost path of travel thereof within the barrel, said member being provided with internal screw threads complementally engaging said screw threads on the retainer and having an internal, circumferentially extending, continuous shoulder disposed to engage said segment around the entire periphery thereof and thereby present a liquid-tight seal located between the spray head and said threads on the retainer and said

tion is either in purely metaphorical terms or in terms which amount simply to a description of the commercial application of the respondent's sprayer.

Thus, in its metaphorical treatment, the respondent says: "The invention is concisely defined by the Court of Appeals in the summation as 'a completely integrated device' in the nature of 'a container with an integrated sprayer-pump'; the 'novel "marriage" of the sprayer with the insecticide container' constituting a 'unique combination.'" (Res. Br., pp. 22-23) And in other passages, we find the respondent attempting to define the "invention" entirely in terms of the supposed commercial innovation in the Cook product. Thus, in its "Question Presented," the respondent states that: "The patent in issue covers a *shipper-sprayer*, which is a unit capable of being integrated and shipped with a liquid container as a composite package." (Res. Br., p. 2) And respondent relies for a definition of the "invention" on the testimony of its expert witness as to "the device's novel contribution to the industry."[3] (Res. Br., p.

---

member respectively, said shoulder being spaced from the lower annular peripheral edge of the member a distance at least slightly less than the distance from that portion of said segment normally engaged by said shoulder, to the proximal upper surface of the cap whereby said lower edge of the member is maintained out of contacting relationship with the cap when the member is on the retainer in a position with said shoulder in tight sealing engagement with the segment." (R. 370)

[3] That description contains a number of elements which are not only not reflected in the patent claims but are not even referred to in the general description of the subject matter set forth in the specification of the Scoggin patent. The Scoggin patent refers to "insecticide" only in referring to a prior art patent; and it does not refer to "automated assembly" at all, or to the sequence of assembly of the gadget. All three of these points, which are central to the expert witness' description quoted at Res. Br., p. 15, and were heavily relied on by the Court of Appeals, relate simply to commercial application, not to anything even remotely claimed as an invention by Scoggin.

15) Remarkably, resort is even had to the respondent's advertising literature to attempt to define the "invention." Respondent says: "Cook's advertising literature stated that the 'sprayer comes completely assembled with a protective plastic cap . . .' and that the product 'manufacturer can begin immediately to package his product with the sealed-in sprayer.' Both the trial court and the Court of Appeals accepted these descriptions of the nature of the invention."[4] (Res. Br., pp. 15-16)

So fundamental is the nature of the wrong tack taken by respondent that we must reiterate once again that the question is not the alleged novelty of Cook's commercial device measured against the background of the commercial operations of the parties to this case, but whether Scoggin invented anything over and above the prior art; or in terms of § 103, whether his patent discloses anything more than an obvious modification of the prior art. In this respect, the history of Scoggin's application in the Patent Office is compelling. When Scoggin first submitted his patent application, his claims (R. 353-55) were almost as sweeping and broad as the descriptions currently essayed in respondent's brief as to what was the "invention" here. In effect, in these first claims, Scoggin did claim the "marriage" of the container cap, plunger, and overcap, which apparently now is said to be the "invention." But even the Patent Office was not prepared to recognize anything of this nature, and Scoggin's claims were rejected as anticipated by the 1938 Lohse patent. (R. 358-59) —Lohse's device was, of course, a "shipper-sprayer," *i.e.*, one in which there was an overcap over the sprayer permitting the entire assembly to be shipped in the bottle. (R. 408) Lohse's device com-

[4] That, of course, was part of their error. See our discussion of the nature of the question presented to this Court in Part II hereof.

bined all the basic elements of the initial Scoggin claims: a depressible plunger mounted in a container cap, a screw-threaded hold-down overcap to depress the plunger during shipment, and a seal over the plunger to prevent the fluid from leaking out of the overcap during shipment.[5] (R. 408-09)

Scoggin at once lowered his sights and began to focus instead (Claims 16, 17, R. 360) on the specific sort of seal he was providing in the bottle cap. Even this was too much for the Examiner in terms of the prior art and he rejected these claims. (R. 362-63) Further efforts were then made to describe the invention in terms of even more narrow details of the specific sort of seal Scoggin was using. (Claims 18-24, R. 363-65) After an interview with the Examiner, these claims in turn were withdrawn, and new claims (Claims 25-28, R. 370-71) of an even more narrow

---

[5] One of the basic purposes of Lohse's invention was stated to be "making provision for convenient and safe transportation [of the bottle and sprayer] when filled, or partly filled, with liquid without danger of leakage of the contents." (R. 408) Scoggin himself testified that the Lohse sprayer was "an integrated sprayer." (R. 170)

Lohse's device came before the recent developments in plastics, although its claims and its disclosure are not restricted to any particular material, and in fact some use of plastic (bakelite) was contemplated. (R. 409) It has been clear for over a century that it would not be an invention to redo the Lohse device entirely in plastic. See *Hotchkiss* v. *Greenwood*, 11 How. 248, 266 (1850). And, as we argue in our main brief, it was not invention—or, for that matter, any real change in the combination of elements disclosed by Lohse (Pet. Br., p. 22), to alter, as Scoggin did, the location of the seal shown in Lohse to a position above the threads of the Lohse overcap—a position clearly taught by the Mellon and Livingstone patents.

Respondent claims that the seal shown in Lohse would not prevent leakage. (Res. Br., p. 25) Its record references are simply to testimony that when Scoggin experimented with putting the seal where Lohse put it, his device leaked, for reasons not articulated. Obviously, there is no reason inherent in the Lohse device why there should be leakage in effecting the seal at this point; and in fact Lohse's seal clearly would be and was effective. (R. 288-89, 407, 408)

nature substituted. These amended claims included, by admission of Scoggin's attorney, "limitations which must be in the claims in order to define novelty" over the prior art. (R. 371) Quite obviously because of the practice of the Patent Office in patenting trivial modifications, if they are narrowly stated, these claims were finally allowed.[6] (R. 374)

---

[6] The respondent protests the references we have made to the Patent Office's proclivity for issuing invalid patents, and to the procedures of the Patent Office, claiming that they are "logically irrelevant" to consideration of the patent in suit. But it is impossible to understand why a patent of the sort involved here ever issued without some general view of the manifest proclivity of the Patent Office for issuing patents on any trivial device or trivial modification of a device on which there is not the most direct of anticipations. And it is impossible realistically to consider the issues presented by this case apart from this background.

Indeed, the Patent Office seems to view its performance in terms of the number of patents it can turn out. Commissioner of Patents Edward J. Brenner recently indicated with pride that "the percentage of applications allowed in Fiscal 1965 was approximately 68%, as compared with 63% for the preceding year."

Evidently there are production goals or norms or some other sort of stakhanovite system in the Patent Office respecting the production of patents, for the Commissioner said further: "I am pleased to note that our overall average for indicating allowable claims and allowable subject matter in first actions is nearly 50% of the first actions, which is our overall goal in this respect. A large number of our Groups are now meeting their particular goals of indicating allowable claims or subject matter in first actions at a level equivalent to 75% of the ultimate allowance level for their particular group. It is hoped that the other Groups will also be able to meet their particular goals in this regard in the near future."

We do not wish to create the impression that there are no limits in the Office on the issuance of patents. The Commissioner's speech definitely indicates one limitation. "We also anticipate that we will issue approximately 67,000 patents in Fiscal 1966, which represents the approximate limit of the Government Printing Office to print patents." (Address before Patent, Trademark and Copyright Section, ABA, Miami, August 7, 1965, Dep't of Commerce Release, pp. 3, 7).

While the claims allowed in these proliferating patents may be trivial, respondent's brief indicates a technique for enlarging them once the patent issues; simply forget about the allowed claims of the patent and redefine the invention in terms of metaphors and one's advertising circulars.

Of course, once the patent was in suit, and in this Court, respondent proceeds to resurrect a description of the "invention" which is, if anything, only like the original Scoggin claims which the Patent Office found to be obviously anticipated by Lohse. Having chosen to dismiss the claims of the Scoggin patent and the prior art as irrelevant, the respondent is apparently not embarrassed by the fact that all three of its new definitions of the Scoggin "invention" —the definition by respondent's attorneys (Res. Br., p. 2), the definition by respondent's expert witness (Res. Br., p. 15), and the definition by respondent's advertising department (Res. Br., pp. 15-16)—describe in detail the 1938 Lohse sprayer.[7]

2. *Substitution of a history of commercial activities for an examination of the prior art.*—Respondent's new version of patent law does not, as we have noted, end with a substitution of metaphors and commercial advertisements for the patent claims as a definition of the "invention." It is also necessary, in the respondent's amendment of the patent laws by substituting commercial innovation for invention, to find some substitute for the frame of reference conventionally used—the "prior art." This substitute has been found in the commercial history of the insecticide industry. Thus, respondent observes: "For many years insecticide manufacturers had been subject to a pressing need for a sprayer that could be integrated into an insecticide container." (Res. Br., p. 29) Respondent's argument appears to be that since Cook was allegedly the first to solve "this problem," the Scoggin patent, which shows the Cook commercial device, must contain an "invention." (See Res. Br., p. 35)

[7] Lohse's sprayer was, in fact, capable of automatic assembly and was put together as a "package" before insertion in the bottle of liquid for shipment. (R. 288-89)

While there might be something to this if the issue were whether the Cook device were a "commercial innovation," this analysis is not particularly helpful in determining whether the claims of the Scoggin patent set forth an "invention."

If the various insecticide manufacturers had been wondering for a long time how they would solve their so-called "problem" of finding an appropriate means of merchandising their product with a sprayer, and one of them had found an old patent which completely disclosed every detail of a solution for the problem, it would have been a good thing for the manufacturer in question and for the rest of the industry. But finding the old patent would not have been a new invention and no one would have claimed that the person who found the old patent and commenced application of it in the liquid insecticide industry should be rewarded with a new patent.[8] That would completely defeat one of the basic purposes of the patent system: the purpose of encouraging disclosure of inventions which, after the statutory monopoly period, can be freely used and applied by anybody.—But this is virtually what happened here, since the old expired Lohse patent in fact did disclose all the essential details of an integrated shipper-sprayer with a depressible plunger, and a hold-down cap effecting a seal over the plunger.

---

[8] Perhaps we should not be so sure. At Res. Br. p. 16, respondent asserts that there is no basis for suggesting: "that the Scoggin invention is (a) in the provision of the space or gap, (b) in any special type of seal, (c) in rearrangement or reshuffling of component parts or (d) in any other minute detail as contended by petitioners." This astounding statement leads to the conclusion that respondent confidently expects, on the basis of the decisions below, to assert its patent against anyone who uses, on a conventional sprayer, a cap having a gasket or any other sealing means wherever located. Thus it may be that the respondent thinks that it has at least patented the Lohse device a second time.

Likewise, if someone proceeded to solve "the problem" supposedly bedeviling the insecticide manufacturers by making a simple combination of ideas shown in two old patents, with the various combined elements performing no new functions in the combination, there would likewise be a solution to the problem but there would be no invention, and no new patent should issue. As the Court put it in the *Supermarket Equipment* case, it might be a "good idea," but it would not be an invention. 340 U.S., at 153. At the very most, this is what happened here.

In fact, in one of its rare references to the relation of the prior art to Scoggin's patent, the respondent on this point is constrained to argue that a long line of cases of this Court dealing with combination patents—which demand, a "new or different function or operation" for the combined elements "than that theretofore performed or produced by them" (*Lincoln Engineering Co.* v. *Stewart-Warner Corp.*, 303 U.S. 545, 549 (1938)), or that "the whole in some way exceeds the sum of its parts," (*Great Atlantic & Pacific Tea Co.* v. *Supermarket Equipment Corp.*, 340 U.S. 147, 152 (1950)), or that the "old elements" must "perform [an] . . . additional or different function in the combination that they perform out of it" (*Ibid.*)—"should be read as meaning" something quite different from what they say. (Res. Br., pp. 27-28)

Respondent says that the opinions *really* mean only that the combination is patentable "if the joint operation of the old elements in the combination performs or produces a new or different function or operation than was performed by *any* of the parts separately." (Res. Br., pp. 27-28; emphasis supplied) The opinions have not been guilty of any such nonsense. Of course, any combination of two old elements—unless one of the elements is superfluous or

purely decorative in the combination—performs an additional function to that performed by *either* of the two separate parts.

* * * * *

Clearly adverse consequences would attend the expanded scope of what would be relevant and consequential if the classic approach of comparison of the prior art with the claims of the patent in suit is abandoned, as is the thrust of respondent's brief. Matters apart from the prior art —which matters are so extensively relied on by the respondent—are not known to the Patent Office when it issues a patent. To the extent that they become relevant, the only result can be the introduction of an even wider gap between what the Patent Office considers patentable and what the courts consider patentable. Moreover, as we set forth in our main brief, the result of taking considerations of this sort into account is to make it increasingly more difficult to forecast the outcome of patent litigation. Given the Patent Office's proclivity for the issuance of invalid patents, the results of this cannot help being adverse to the public interest. (Pet. Br., pp. 32-33)

Illustrating this broadened scope of relevance, the fact that Calmar's technicians tried various alternative means to prevent leakage out of the pump itself—which means that they were pursuing the tack which eventually led to the superior internal seals of the Calmar SS-40—somehow becomes relevant to the question whether the Scoggin device with its inferior external seal constituted an invention. (See Res. Br., pp. 32-33) But, once again, the question is not whether there was a problem that the insecticide manufacturers were attempting to solve. The only question is whether Scoggin's "solution" to it amounted to an invention.

Also, under this expanded concept of relevance, the relative financial condition of the patentee and the alleged infringer apparently becomes relevant; at least to the extent seemingly of justifying references to it in the respondent's brief. (Res. Br., pp. 3-4) Presumably by an expansion of this theory, the acquisition of The Drackett Company by Bristol-Myers Company in July 1965 becomes of relevance to the validity of the Scoggin patent, and, indeed, apparently so does the market structure in the toothpaste and detergent industries. (Res. Br., p. 4) It is a pity that materials of this sort occupy space in respondent's brief which might with more relevance have been devoted to an examination of the prior art.

## II

The respondent, finally, even resorts to the tired proposition that the question of invention here is a question of fact and that this Court should accordingly defer to the conclusions of the lower courts.[9] (Res. Br., p. 32) Historically, the question of whether a patent is void for want of invention has been so far from being considered one of pure "fact" by this Court that there are Nineteenth Century cases which hold that the question of invention is so fundamental that it might be raised *sua sponte* by the court. See *Brown* v. *Piper*, 91 U.S. 44 (1875); *Slawson* v. *Grand Street, P. P. & F. R. Co.*, 107 U.S. 649 (1883). And the most recent opinion of this Court on the subject expressly

---

[9] This argument is a favorite of the various Patent Bar Associations and other parties that have filed *amicus curiae* briefs in No. 11, *Graham* v. *John Deere Co.* See Brief Amicus Curiae of Professor Goldstein, pp. 6, 7-8, 11; Brief Amicus Curiae of Illinois State Bar Ass'n, pp. 6, 7, 9; Brief Amicus Curiae of New York Patent Law Ass'n, pp. 9-10.

rejects the contention that the question of invention is one of fact, on which—as it was argued there—the concurrence of the two lower courts should be conclusive. See *Great Atlantic & Pacific Tea Co.* v. *Supermarket Equipment Corp.*, 340 U.S. 147, 153-54 (1950); *id.*, at 156 (concurring opinion).[10] *Cf. Dalehite* v. *United States*, 346 U.S. 15, 24 (1953); *United States* v. *Parke, Davis & Co.*, 362 U.S. 29, 44-45 (1960); *United States* v. *Mississippi Valley Generating Co.*, 364 U.S. 520, 525-26 (1961). Respondent cites nothing in the text or legislative history of the 1952 codification of the patent laws that would indicate any change on this point, and there is none.

Indeed, although the respondent and the courts below use certain of the language of this Court's decisions, it is clear that the respondent's approach—which is identical to that of the courts below—is one involving the application of an entirely misconceived standard or approach to the question of patentability. That approach is to abandon the classic test of comparison of the claims of the patent in suit with the prior art, in favor of an examination of the matter purely in terms of commercial innovation and commercial success. As we have developed in our main brief, this is a plain error of law, which has the effect of diverting attention from the only question in issue—whether a patentable invention was made—and focusing it instead

---

[10] This Court's last action on the merits in a case of patent validity —its *per curiam* reversal in *Crest Specialty* v. *Trager*, 341 U.S. 912 (1951)—is instructive as to the point that invention is not, in essence, a question of fact but one of law. In the *Trager* case, the lower courts undertook to find that it was "beyond the skill of a mechanic and require[d] exercise of inventive genius" to devise a child's feeding dish having on its rim a figure of a pig which an adult could pretend to "feed" so as to coax the child into eating. *Trager* v. *Crest Specialty*, 184 F.2d 577, 578 (7th Cir. 1950). Despite this "finding of fact" this Court summarily reversed the judgment.

upon questions which are irrelevant to the issue of whether the conditions exist for the lawful existence of the patent monopoly. (Pet. Br., pp. 28-31)

## CONCLUSION

For the reasons stated in our main brief and in this reply brief, the judgment of the Court of Appeals should be reversed, and the case remanded to the District Court with instructions to grant petitioner's prayer for a declaratory judgment that the Scoggin patent is not valid, and to dismiss respondent's counterclaims.

Respectfully submitted,

VICTOR H. KRAMER
DENNIS G. LYONS
1229 Nineteenth Street, N.W.
Washington, D. C. 20036
*Attorneys for Petitioner*

*Of Counsel:*

FRANCIS G. COLE
WATSON, COLE, GRINDLE & WATSON
Washington, D. C.

ARNOLD, FORTAS & PORTER
Washington, D. C.

September, 1965

FILE COPY

177

Office-Supreme Court, U.S.
FILED
OCT 12 1964
JOHN F. DAVIS, CLERK

# In the Supreme Court of the United States

**October Term, 1964.**

No. [redacted] 11

WILLIAM T. GRAHAM, AND GRAHAM PLOW, INC., *Petitioners,*

vs.

JOHN DEERE COMPANY OF KANSAS CITY, AND DEERE & COMPANY, *Respondents.*

## PETITION FOR WRIT OF CERTIORARI TO THE UNITED STATES COURT OF APPEALS FOR THE EIGHTH CIRCUIT.

CLAUDE A. FISHBURN and
ORVILLE O. GOLD,
1217 Commerce Trust Building,
Kansas City 6, Missouri,
*Attorneys for Petitioners.*

SMITH-GRIEVES, LAW PRINTERS, KANSAS CITY, MO

## INDEX.


PAGE

Opinions Below ..... 1

Jurisdiction ..... 2

Question Presented ..... 3

Constitutional and Statutory Provisions and the Rules of Civil Procedure Involved ..... 3

Statement of the Case ..... 4

Reasons for Granting the Writ ..... 5

Argument ..... 7

The Test of Patentability Applied by the Court of Appeals for the Eighth Circuit Is in Conflict with the Requirements of the Statute ..... 9

The Patent in Suit Meets the Test of Invention ..... 11

Conclusion ..... 13

Appendix A ..... 17

Appendix B ..... 30

Appendix C ..... 31

Appendix D ..... 32

Appendix E ..... 51

Appendix F ..... 56

Appendix G ..... 61


### Table of Cases Cited.


Automatic Devices Corp. v. Sinko Tool & Manufacturing Co. (1941), 314 U. S. 94 ..... 7

Cuno Engineering Corp. v. Automatic Devices Corp., (1941), 314 U. S. 84 ..... 7, 9

PAGE

Diamond Rubber Co. v. Consolidated Rubber Tire Co. (1911), 220 U. S. 428, 436, 437 (1911) ..... 7

Goodyear Tire & Rubber Co. v. Ray-O-Vac Co. (1944), 321 U. S. 275 ..... 7

Great A & P Tea Co. v. Supermarket Equipment Corporation, 340 U. S. 147 ..... 9

Halliburton Oil Well Cementing Co. v. Walker (1946), 329 U. S. 1 ..... 12

Parker Appliance Co. v. Irvin W. Masters, Inc., *et al.* (1950), 94 F. Supp. 72, aff. 9 Cir., 193 F. 2d 180 ..... 12

Permutit Co. v. Graver Corporation (1931), 284 U. S. 52 ..... 7

Refrigeration Patents Corp. v. Stewart-Warner Corp., (1947), 7 Cir., 159 F. 2d 972 ..... 12

United States v. Carlos Muniz, *et al.*, (1963), 374 U. S. 150 ..... 7

**Statutes.**

35 U. S. C. 101 ..... 3, 9, 10, 61

35 U. S. C. 102 ..... 3, 9, 10, 61

35 U. S. C. 103 ..... 3, 6, 9, 10, 62

35 U. S. C. 282 ..... 3, 10, 63

Rule 52 F. R. C. P. ..... 3, 6, 63

# In the Supreme Court of the United States

**October Term, 1964.**

---

**No._____**

---

WILLIAM T. GRAHAM, AND GRAHAM PLOW, INC., *Petitioners,*

vs.

JOHN DEERE COMPANY OF KANSAS CITY, AND DEERE & COMPANY, *Respondents.*

---

## PETITION FOR WRIT OF CERTIORARI.

---

*To the Honorable the Chief Justice and Associate Justices of the Supreme Court of the United States:*

Your petitioners, WILLIAM T. GRAHAM and GRAHAM PLOW, INC., pray that a writ of certiorari should issue to review the decree of the Court of Appeals for the Eighth Circuit entered on June 18, 1964 (R. Vol. V, p. 14) 333 F. 2d 529, petition for rehearing denied July 13, 1964 (R. Vol. V, p. 21).

### Opinions of the Courts Below.

(a) Opinion of the District Court (R. 17-34) reported 216 F. Supp. 272.

(b) Opinion of the United States Court of Appeals for the Eighth Circuit in John Deere Company of Kansas City et al. v. William T. Graham et al., No. 17,441, dated June 18, 1964, (R. Vol. V. p. 1-14) reported in 333 F. 2d 529. Copies of the opinion, the judgment and the order overruling petition for rehearing are appended to this petition. (Appendix A, B, and C).

The patent here in suit has also been before other courts in the following cases:

(a) *William T. Graham et al.* v. *Jeoffroy Mfg., Inc., et al.* (D. C. Tex. N. D.) opinion not reported.

(b) *Jeoffroy Mfg., Inc. et al.* v. *William T. Graham et al.*, 5 Cir., 219 F. 2d 511, holding patent valid and infringed. Certiorari denied, 350 U. S. 826. (Appendix D)

(c) *Jeoffroy Mfg., Inc. et al.* v. *William T. Graham et al.* (D. C. Tex. N. D.) contempt proceeding, opinion not reported.

(d) *Jeoffroy Mfg., Inc. et al.* v. *Graham, et al.*, 256 F. 2d 360, (contempt affirmed). (Appendix E)

(e) *Graham* v. *Cockshutt Farm Equipment, Inc.*, (D. C. Tex. N. D.) opinion not reported.

(f) *Graham* v. *Cockshutt Farm Equipment, Inc.*, 5 Cir., 256 F. 2d 358, holding patent valid but not infringed. (Appendix F)

**Jurisdiction.**

1. This is a suit arising under the Patent Laws of the United States, Title 28, Section 1338, of the United States Code.

2. The jurisdiction of this Court is invoked under Title 28, Section 1254, of the United States Code.

3. The date of the decree which the petitioners seek to have reviewed is June 18, 1964. Petition for rehearing was denied July 13, 1964.

### Question Presented.

The principal and we believe the sole question presented is the validity of the Graham patent No. 2,627,798. The District Court found infringement, but the Court of Appeals for the Eighth Circuit did not consider the question of infringement.

### Constitutional and Statutory Provisions and Procedure Rule Involved.

This case involves Clause 8 of Section 8, Article I of the Constitution of the United States, and Sections 101, 102, 103 and 282 of Title 35 of the United States Code, and Federal Rule of Civil Procedure Number 52, all of which are set forth in Appendix G hereof.

## STATEMENT OF THE CASE.

The patent in suit (R. 577), while entitled "Clamp for Vibrating Shank Plows", discloses and claims a structure mounting tool carrying shanks on mobile frames for working soil in what is termed "chisel plowing", and particularly for use in rocky areas where during plowing the structure is subjected to severe shocks by the tool striking rocks or immovable objects. Chisel tools are secured to the lower ends of the shanks and, when the structure is moved over the ground with the tools extending therein, said tools break the soil and form small alternate ridges and furrows having exposed surfaces and leaving vegetation and other emulsive material normally occurring on the field on top of the ground. In chisel plowing in the plains country wherein the ground was substantially free of rocks, the upper forward ends of shanks were rigidly secured to plow beams or frames, the shanks extending rearwardly therefrom and curving downwardly to the end mounting the chisel tool, and any resiliency or flexing of the shanks was only in the portions that extended rearwardly from the clamps. However, when such structures were used in the farming areas having rocky conditions, the plows were bent and broken and the structures were not satisfactory. When the plows are pulled through the ground by tractors and one of the tools on a shank strikes a buried rock, the structure may be subjected to extreme shocks. The forces on the chisel tool could result in forces on the forward ends of the shanks up to 4,000 pounds or so (R. 409). The invention provides a structure with an ability to flex for absorbing the shock so as to eliminate or reduce breakage or damage to the structure.

In the trial of this case before the District Court, the structures were shown and the Court was clearly advised in the premises. The District Court rendered a memorandum opinion and made findings of fact and conclusions of law. One of the findings held that with the structure of the patent an improved functional result is obtained. The Court also found that the combination of the patent was not obvious at the time Graham made his invention to a person having ordinary skill in the art of agricultural implements and other related arts. The Court of Appeals reversed the District Court's judgment and held the patent invalid and, in doing so, set forth its test of patentability. It also clearly stated that its test was different than that applied by the Court of Appeals of the Fifth Circuit wherein the patent had been held valid. There is a direct conflict of determination between the Court of Appeals for the Eighth Circuit in this case and the Court of Appeals for the Fifth Circuit in the cases of *Jeoffroy Mfg. Inc., et al.* v. *William T. Graham, et al.,* 219 F. 2d 515 (cert. denied 350 U. S. 826) and *Graham* v. *Cockshutt Farm Equipment, Inc.,* 256 F. 2d 358, in both of which cases the same patent was held valid. The Court of Appeals of the Eighth Circuit, while referring to the statute, did not apply the test of patentability provided therein.

**Reasons for Granting the Writ.**

The discretionary power of this Court to grant a writ of certiorari is invoked upon the ground of the direct disagreement between the Court of Appeals for the Eighth Circuit, 333 F. 2d 529, and the Court of Appeals for the Fifth Circuit, 219 F. 2d 511 and 256 F. 2d 358, as to the validity of the Graham patent.

In accordance with the thoroughly established practice of this Court, such a conflict between the decisions of two

Courts of Appeals, particularly when coupled with the important question of Federal Law involved, constitutes special and important reasons for the grant of the writ as provided in Rule 19 (b) of this Court.

In almost all cases where a patent is twice litigated, there is additional evidence in the second case, but in this case there was no additional prior art presented over that which was considered by the Court of Appeals for the Fifth Circuit in the case of *Graham* v. *Cockshutt Farm Equipment, Inc.*, 256 F. 2d 358.

With the prior art the same, one Court of Appeals held the patent valid and the other Court of Appeals overturned the decision of the District Court and held the patent invalid. There is a fundamental difference between the two Courts of Appeals in their respective legal views as to the patent in suit.

The discretionary power of this Court to grant a writ of certiorari is invoked upon the further ground that the decision of the United States Court of Appeals for the Eighth Circuit is a decision involving a question of Federal Law, namely, as to test of patentability that is contrary to that set forth in the Statute, Title 35, Section 103, of the United States Code. The test of patentability under the Statute is an important question of Federal Law which has not been, but should be, settled by this Court.

A further reason is that the decision of the Court of Appeals for the Eighth Circuit is a decision with respect to review of Findings of Fact by the District Court that is in conflict with the express provisions of Rule 52 of the Federal Rules of Civil Procedure; and is in conflict with the decisions of this Court upon that question, and is in conflict with the decisions of other Courts of Appeals.

## ARGUMENT.

Direct disagreement as to the validity of a patent between Courts of Appeals of different circuits has invariably led to a review by this Court.

*Diamond Rubber Co.* v. *Consolidated Rubber Tire Co.* (1911), 220 U. S. 428, 436, 437 (1911);
*Permutit Co.* v. *Graver Corporation* (1931), 284 U. S. 52;
*Cuno Engineering Corp.* v. *Automatic Devices Corp.*, (1941), 314 U. S. 84;
*Automatic Devices Corp.* v. *Sinko Tool & Manufacturing Co.* (1941), 314 U. S. 94;
*The Goodyear Tire & Rubber Co.* v. *Ray-O-Vac Co.* (1944), 321 U. S. 275.
*United States* v. *Carlos Muniz, et al.*, (1963), 374 U. S. 150.

This case presents a stronger justification for grant of the writ than the usual case wherein a patent has been litigated in different circuits. In almost every case where a patent is litigated a second time after adjudication in one circuit, the party accused of infringement attempts to augment the proofs of the first case so there is usually new evidence in the second case. However, in this case, all of the alleged prior art relied on by the defendants was before the Court and considered in the case that resulted in the decision of the Court of Appeals for the Fifth Circuit in which the patent in suit was held valid. *Graham* v. *Cockshutt Farm Equipment, Inc.*, 5 Cir., 256 F. 2d 358. The cases cited above are a few well known examples that would indicate justification for granting of the writ, even if there had been new evidence in the case here. This is even a stronger case; with exactly the same prior art, the Court of

Appeals for the Fifth Circuit held the patent valid, and the Court of Appeals for the Eighth Circuit held the patent invalid. This presents a clear conflict and direct disagreement that is believed to justify granting of the writ. The opinion of the Court of Appeals for the Eighth Circuit stated:

> "* * * To be patentable, a combination of individually old elements must contribute something new; the elements must cooperate to produce an accumulation which exceeds the sum of its parts. (Citing cases). Stated differently, 'the bringing together of old elements in a mechanism involving no new principle, to produce an old result, however skillfully done, even though the result marks an advance in efficiency and utility, is but an exercise of mechanical skill and not invention.' General Bronze Corp. v. Cupples Products Corp., 8 Cir., 189 F. 2d 154, 161 (1951).
>
> "Our task is to first ascertain whether the trial court applied the proper legal standard in determining the validity of Patent 798, and then to decide whether the patent satisfies the requirements of this test. At this point, we note that the 798 Patent has been held valid on two occasions in appeals before the Fifth Circuit. Jeoffroy Mfg., Inc. v. Graham, 219 F. 2d 511 (1955), cert. denied, 350 U. S. 826 (1955), and Graham v. Cockshutt Farm Equipment, Inc., 256 F. 2d 358 (1958).
>
> Unlike our court, the Fifth Circuit has 'long recognized . . . that an improvement combination is patentable even though its constituent elements are singly revealed by the prior art, where . . . it produces an *old result in a cheaper and otherwise more advantageous way.*' (Emphasis supplied). 219 F. 2d at 519. For other recognition by the Fifth Circuit of the 'old result in a more efficient and economical way' see, Cornell v. Adams Engineering Company, supra, 258 F. 2d at 875-876."

This clearly shows a difference in approach, a direct disagreement as to the determination of patentability, which is an important question of Federal Law that should be settled by this Court.

**The Test of Patentability Applied by the Court of Appeals for the Eighth Circuit is in Conflict with the Requirements of the Statute.**

The Court of Appeals in this case refers to a standard of invention and throughout the opinion clearly shows that the test or standard applied by that Court is that the mechanism must produce a new result. It is submitted that this is in conflict with the Statute. It is submitted that the constitutional clause contains no standard for determining patentability that requires the invention produce a new result. As for the Statute, the Patent Act of 1952 sets out all of the requirements for patentability in the clearest possible form. 35 U.S.C. 101, 102 and 103. Section 101 says inventions must be new and useful. Section 102 defines novelty, and Section 103 sets forth the other requirement that the subject matter as a whole would not have been obvious at the time the invention was made to a person having ordinary skill in the art. The last sentence of Section 103 clearly eliminated any requirement that the new device reveal a flash of creative genius which some courts required for validity after this Court's decision in the *Cuno Engineering Corp* v. *Automatic Devices Corp.*, 314 U. S. 84 (1941). The Court of Appeals of the Eighth Circuit admittedly is applying tests or standards as to patentability based upon the decisions in *Cuno Engineering Corp.* v. *Automatic Devices Corp.*, 314 U. S. 84, and *The Great A & P Tea Co.* v. *Supermarket Equipment Corporation*, 340 U. S. 147 (1950). Both of said decisions were before the Patent Act of 1952 which now provides the rules that

should be followed in determining the patentability of the invention. It is believed that the decision in the present case being in conflict with the provisions of the Statute, 35 U.S.C. 101, 102 and 103, justifies the granting of the writ of certiorari.

The decision of the Court of Appeals for the Eighth Circuit is also in conflict with the express provisions of the Statute, 35 U.S.C. 282, which provides a patent shall be presumed valid. The Court of Appeals in its decision stated that the presumption of validity is weakened if applicable prior art is not considered by the Patent Office, but it ignored entirely the fact that all of the patents and prior uses relied on by the defendants that were not made of record in the Patent Office during the prosecution of the application for the patent were similar to some of the patents relied upon by the Patent Office examiner. The Patent Office cites examples of prior art. It would be impractical, repetitious and useless to cite and make a record of each and every prior art patent considered by the Patent Office examiner in his search of the prior art in locating the ones to be cited as examples. The mere fact that a defendant brings before the Court a prior patent or prior use that was not made of record in the Patent Office proceedings should not weaken the presumption of validity provided by the Statute unless the additional prior art is substantially different and more pertinent than that cited by the Patent Office. In this case, the prior art that was not made of record in the Patent Office was similar to that which was made of record and, therefore, was merely cumulative. It is only where more pertinent prior art that was not considered by the Patent Office is brought forth in the Court that the presumption of validity is weakened. To hold that merely citing cumulative prior art, no more pertinent, would weaken the presumption of validity would

emasculate the provisions of the Statute. We submit that this Court should exercise its powers of review here to eliminate this erroneous concept of the Court of Appeals of the Eighth Circuit.

**The Patent in Suit**
**Meets the Test of Invention.**

Was the device shown in the Graham patent No. 2,627,798 a solution to a problem? Was it useful? Was it new? There had been a problem of breakage of plows in the rocky territory and, while there might be different solutions for the problem, certainly the subject Graham patent was one solution. It was useful because it permitted plowing in such rocky country. Furthermore, devices which came under the patent were admittedly commercial successes. Was it new? It did have some old elements, but that does not defeat invention. The Graham patent structure was new. In all of the prior art wherein a chisel shank was mounted for pivotal movement, there was not one that had the arrangement, operation and action of the Graham structure. The Court of Appeals does not point out wherein any of the prior art would teach modifications of other prior art to form a structure such as in the Graham patent. It merely stated that it thought the difference between the prior art and the Graham patented structure was not sufficient to support the patent. The Court, in its opinion, mentions the arrangement for obtaining the flexibility in the shank and the difference in the bending thereof from that shown in the prior art, but then it states that that function or result is not found in the claims or in the specification. There was no holding that the specification was insufficient to teach someone how to build the structure. It is submitted that when the drawings and specification of a patent teach how the structure is to be made, the patent

has complied with the statute as to disclosure. There is no requirement in the statute that there be any detail or description as to every function or result that will or can be obtained. To suggest that the absence of details of function or result in a specification or claims of a patent is a proper ground for holding the patent invalid is clearly a basis that is not in accordance with the statute, and that is completely contrary to the law.

In the past, many claims have been held improper because they were functional or claimed the result instead of the structure (*Halliburton Oil Well Cementing Co.* v. *Walker* (1946), 329 U. S. 1; *Refrigeration Patents Corp.* v. *Stewart-Warner Corp.* (1947), 7 Cir., 159 F. 2d 972; *Parker Appliance Co.* v. *Irvin W. Masters, Inc., et al.* (1950), 94 F. Supp. 72, aff. 9 Cir., 193 F. 2d 180). In the present case, the patentee has described the structure and claimed the structure, and the Court of Appeals for the Eighth Circuit holds the patent invalid because it did not do exactly what has been condemned through the years.

The defendant, Deere & Company, was in serious difficulties because they had nothing to solve the problem of plowing in the rocky territory. They made surveys and thereby knew the plaintiff's patent showed a practical solution. With all of the engineers of this huge company, they did not follow the prior art to find a solution; in fact, they did not find a solution, they merely copied plaintiff's patent structure.

There was no finding by the Court of Appeals that any prior art device was like that of the patent. There was no finding that any of the prior art had the same action. There was no finding that the patent structure would not produce a better result or the same result in a more economical, facile manner. There was only the finding of the Court of Appeals that there was an improper test used

by the District Court, namely, that the District Court did not find any new result. Also, there was an independent search on which the Court of Appeals embarked to find some excuse to hold the patent invalid. It disregards the requirements of the statute that a patent *disclose the structure.* It disregarded the requirement that the claims *specify the structure.* It held that the failure of the specification and claims to spell out function and result was a fatal defect and, therefore, the patent was invalid. It is submitted that this is going to the ultimate of extremes to find an excuse to hold a patent invalid.

The Court of Appeals went further, disregarding Rule 52 of the Federal Rules of Civil Procedure and the District Court's findings regarding the fact that none of the prior art structures were like the patent structure. They held the flexing provided by the patent structure was insignificant. It made this holding in the face of the fact that the defendants clearly made their structure to have such flexing. It had to be significant; otherwise, Deere & Company's engineers would have made the structure with the shank above the plate so that it would be like the prior art. We submit that the Court of Appeals has erred in its opinion and it should be reversed and the District Court's judgment reinstated.

## Conclusion.

In conclusion, it is submitted that it is important that all litigants may have their questions of patent validity determined according to uniform decisions of this Court. It is important that the patent statutes be interpreted properly and that patentability be determined in accordance with the statutes and not by some test or standard having requirements that are outside of the statute or that have

been eliminated by the statute. To preserve the security under the law regarding patents that should be afforded by the decisions of this Court, is of vast importance to the entire public, but particularly to all manufacturers of, dealers in, and users of machines, devices and commodities which are or may be covered by patents.

It is, therefore, respectfully submitted that this case is one calling for the exercise by this Court of its supervisory powers in order that conflict of decisions of a Federal question by the United States Court of Appeals for the Eighth Circuit and that of the Fifth Circuit may be removed, in order that important questions of Federal Law decided by the United States Court of Appeals for the Eighth Circuit which have not been but should be settled by this Court may be settled by this Court, and to such an end a writ of certiorari should be granted, and this Court should review the decision of the United States Court of Appeals for the Eighth Circuit and finally reverse said decision.

Respectfully submitted,
CLAUDE A. FISHBURN,
ORVILLE O. GOLD,
*Counsel for Petitioners.*

October 8, 1964.

## APPENDIX A

# United States Court of Appeals

### FOR THE EIGHTH CIRCUIT

No. 17,441

| | |
|---|---|
| John Deere Company of Kansas City, a Corporation, and Deere & Company, a Corporation, Appellants, v. William T. Graham, and Graham Plow, Inc., Appellees. | Appeal from the United States District Court for the Western District of Missouri. |

[June 18, 1964.]

Before VOGEL, MATTHES and BLACKMUN, Circuit Judges.

MATTHES, Circuit Judge.

This is an action for infringement of Patent No. 2,627,798 (hereinafter sometimes referred to as "Patent No. 798") issued to William T. Graham (plaintiff-appellee) on February 10, 1953, for a "Clamp for Vibrating Shank Plows." Graham Plow, Inc. (plaintiff-appellee) is

a licensee under the patent. The trial court found the patent valid and that Claims 1 and 2 of the patent were infringed by defendants John Deere Company of Kansas City and Deere & Company. From the judgment entered pursuant to findings of fact and conclusions of law defendants (hereinafter called "appellants") have appealed. Jurisdiction is established by virtue of 35 U.S.C. § 281 and 28 U.S.C. § 1338.

Appellants advance two basic contentions. (1) That Patent No. 798 is invalid for want of invention and that the findings for appellees on this issue is clearly erroneous because the trial court: (a) failed to give proper consideration and effect to the rule that the presumption of validity is weakened when pertinent prior art was not considered by the Patent Office; (b) applied an improper test of invention. (2) That even if validity of the patent is sustained, appellants' accused devices do not, within the rule or doctrine of equivalents, infringe Patent No. 798.[1] If appellants' position as to contention (1) is sound, i.e., if the Graham patent is invalid for want of invention, there can be no infringement of its claims and we need not consider contention (2). *Selmix Dispensers, Inc.* v. *Multiplex Faucet Co. (Inc.),* 8 Cir., 277 F. 2d 884, 886 (1960); *Caldwell* v. *Kirk Manufacturing Company,* 8 Cir., 269 F. 2d 506, 507 (1959), cert. denied, 361 U. S. 915 (1959); *Briggs & Stratton Corporation* v. *Clinton Machine Co.,* 8 Cir., 247 F. 2d 397, 400, 401 (1957), cert. denied, 355 U. S. 914 (1958).

Appellees urge and rely upon the uncontroverted rule, established by statute and consistently recognized by the

[1]For a comprehensive and enlightening discussion of the doctrine of equivalents, see *Parmelee Pharmaceutical Company* v. *Zink,* 8 Cir., 285 F. 2d 465, 470, *et seq.* (1961).

courts, that a patent shall be presumed valid and that the burden of establishing invalidity of a patent shall rest on the party asserting it. 35 U.S.C. § 282; e.g., *Radio Corporation of America* v. *Radio Engineering Laboratories, Inc.*, 293 U. S. 1, 7-8 (1934); *Steffan* v. *Weber Heating and Sheet Metal Company*, 8 Cir., 237 F. 2d 601, 602 (1956). It is equally clear, however, that the presumption of validity is a rebuttable one, that when substantial evidence attacking the validity of a patent is introduced, the question whether the patent constitutes an invention is for the court, *Steffan* v. *Weber Heating and Sheet Metal Company, supra*, 237 F. 2d at 602; *Continental Farm Equipment Co.* v. *Love Tractor*, 8 Cir., 199 F. 2d 202, 204 (1952), cert. denied, 345 U. S. 909 (1953), and that the presumption of validity is weakened if applicable prior art is not considered by the Patent Office. *L. S. Donaldson Company* v. *La Maur, Inc.*, 8 Cir., 299 F. 2d 412, 420 (1962), cert. denied, 371 U. S. 815 (1962); *Day-Bright Lighting, Inc.* v. *Sandee Manufacturing Co.*, 7 Cir., 286 F. 2d 596, 597 (1960), cert. denied, 366 U. S. 963 (1961); *Cornell* v. *Adams Engineering Company*, 5 Cir., 258 F. 2d 874, 875 (1958).

If, as urged by appellants, the trial court failed to apply the proper legal test or standard, it necessarily follows that its finding of patentabiltiy was induced by an erroneous view of the law, its finding is clearly erroneous, and the judgement based upon such finding cannot stand. *Great A. & P. Tea Co.* v. *Supermarket Equipment Corporation*, 340 U. S. 147, 153-154 (1950); *Selmix Dispensers, Inc.* v. *Multiplex Faucet Co. (Inc.), supra*, 277 F. 2d at 886; *Caldwell* v. *Kirk Manufacturing Company, supra*, 269 F. 2d at 508, 509.

This court has adhered to the position that since *Cuno Engineering Corp.* v. *Automatic Devices Corp.*, 314 U. S.

84 (1941), "the amount of originality and ingenuity, over and beyond novelty and utility, which will constitute invention necessary to sustain a patent for a combination of old elements [such as we have here] in a crowded art, has increased." *Briggs & Stratton Corporation* v. *Clinton Machine Co., supra,* (concurring opinion of Judge Sanborn, 247 F. 2d at 401) and cases there cited. In *Caldwell* v. *Kirk Manufacturing Company, supra,* 269 F. 2d at 509, Judge Sanborn again expressed the principle in this language:

> "More exacting standards for determining patentable invention have been applied by the courts in recent years than was formerly the case. In *Trico Products Corporation* v. *Delmar Corporation,* 8 Cir., 180 F. 2d 529, 533, this Court said:
>
> "'* * * 'The Supreme Court has, we think, raised the standards of originality necessary to sustain patents for improvements such as those involved in the instant cases, regardless of their usefulness or commercial success. Compare, *Eibel Process Co.* v. *Minnesota & Ontario Paper Co.,* 261 U. S. 45, 43 S. Ct. 322, 67 L. Ed. 523, and *Temco Electric Motor Company* v. *Apco Manufacturing Company,* 275 U. S. 319, 48 S. Ct. 170, 72 L. Ed. 298, with *Cuno Engineering Corp.* v. *Automatic Devices Corp., supra,* 314 U. S. 84, 62 S. Ct. 37, 86 L. Ed. 58.' "

The same pronouncement appears in *Steffan* v. *Weber Heating and Sheet Metal Company, supra,* 237 F. 2d at 604; *Selmix Dispensers, Inc.* v. *Multiplex Faucet Co.* (Inc.), *supra,* 277 F. 2d at 887; and *Crome & Company* v. *The Vendo Company,* 8 Cir., 299 F. 2d 852 (1962), where Judge Blackmun in his dissent observed, "Mechanical combination patents in this court have met with little recent success."

**Appendix A**

With these pronouncements clearly in mind, we turn to the factual setting of the case. Inasmuch as the trial court's Memorandum Opinion, Findings of Fact, and Conclusions of Law, W.D. Mo., 216 F. Supp. 272 (1963), adequately embody the general factual background, including the terms of the patent claims and other technical descriptions, we need here set forth only a condensed version of the facts.

Appellee Graham originally submitted twelve claims in his application to the Patent Office for a patent on a device which eventually was issued as Patent No. 798. The Patent Office rejected all twelve claims, partially on the grounds that some of them failed to patently distinguish from a prior patent issued to Graham—No. 2,493,811 (Patent No. 811)—and partially on the grounds of lack of invention. Graham then submitted two claims to be substituted for the original twelve, and these two claims were the basis for issuance of the 798 Patent.

Broadly stated, Patent 798 relates to the mounting of tools on a frame which is moved over the ground to break the soil—a process termed "chisel plowing." Appellee Graham Plow, Inc.'s predecessor manufactured and sold chisel plows wherein the upper forward portion of the shank was rigidly fixed to the plow beam by a *rigid* clamp. Because these rigid structures proved to be unsatisfactory due to their inability to withstand shocks when used for plowing in rocky country, Graham devised a *spring* clamp structure, and was issued a patent—No. 811—on it in January, 1950. Graham Plow, Inc. has continued to manufacture and sell plows with spring clamps which embody the principle of the 811 Patent, but neither appellees, nor any licensee under them, has ever manufactured or sold a clamp embodying the 798 structure.

## Appendix A

The 798 clamp—also a "spring clamp"—is used to connect the upper forward end of a resilient shank to a beam with the lower end of the shank carrying a chisel for plowing or other ground-working operations. The clamp includes a body portion movably attached to the beam with a rearward portion having a pivot pin on which is pivotally mounted a movable part with a plate portion extending forwardly or longitudinally of the normal direction of travel of the plow. The upper forward portion of the shank extends through a stirrup or loop element at the rear of the movable part and longitudinally *beneath* the plate portion of the movable part and is connected to the plate at the forward end thereof at a substantial distance from the pivot pin, whereby the shank and movable part pivot together about the axis of the pivot pin. A coil spring is arranged at the forward end of the body and, through a nut, washer and spring rod, acts on the shank and plate member to resiliently urge the forward end of clamp to a stop engagement therewith to normally hold the shank in normal position. In plowing operations forces are exerted rearwardly and upwardly on the chisel or other ground-working tool, and when sufficient to overcome the forces applied by the spring the shank and movable part will pivot on the pivot pin with the forward end of the shank and plate moving downwardly against the tension of the spring. Forces in plowing hold the shank against the rear of the plate of the movable part and when said forces are removed or lessened, or the ground-working tool removed from the ground, the shank at the rear of the movable part is supported by a stirrup or loop that embraces the shank adjacent the pivot of the movable part. In plowing operations, if the ground-working tool

strikes a rock or other obstruction, substantial shock and forces are applied to the shank, pivoting the shank and movable member about the pivot pin, tending to compress the spring and permitting upward movement of the ground-working tool whereby it can pass over the rock or obstruction and, as it passes over such obstruction, the stirrup or loop on the movable part supports the shank against excessive rebound.

Five prior patents indicating the state of the prior art were made of record in the Patent Office during Graham's prosecution of the application for the 798 Patent. Four of these patents, ten others not of record in the Patent Office, and two other prior spring clamp devices not of record in the 798 file wrapper, were relied upon below by appellants as revealing the prior art.

Since our disposition of this case, as subsequently revealed, does not necessitate resolution of the infringement issue, we forego discussion of appellants' two accused devices, found to infringe Patent 798.

The following summarized finding of the trial court on the validity issue, among other findings and conclusions, induced the ultimate decision in favor of appellees:

(1) Although not all the now disclosed prior art was cited by the Patent Office, the statutory presumption of validity of the 798 Patent is not weakened or destroyed since the uncited prior art is "similar to some of the patents relied upon by the Patent Office Examiner."

(2) The prior art as a whole in one form or another contains all of the mechanical elements of the 798 Patent, and in a broad sense all of the elements are found in the Glencoe clamp. [Glencoe was not cited by the Patent Office]. Nevertheless, the particular arrangement of the

elements disclosed by 798 is not present in any single reference or as a whole.

(3) An *improved* functional result is obtained by the 798 Patent, and the main improvement is due to the particular arrangement of the shank in relation to the pivoted member and spring member which reflects in downward flexing of the shank at the forward portion thereof alongside the plate portion of the pivoted member and does lessen wear and tear to some parts of the clamp.

(4) The 798 Patent is an improvement patent and, while the individual mechanical elements may be found in the prior art, taken as a whole the 798 structure is sufficiently different in the operative relationship of the shank and pivoted member with a slight but significant difference in the flexing of the forward portion of the shank that is not found in the prior art, so that the 798 structure involves invention.

(5) The differences between the 798 Patent and the prior art are such that the 798 combination would not have been obvious at the time Graham made his invention to a person having ordinary skill in the art of agricultural implements and other related arts.

We approach determination of the validity issue fully cognizant that the mere fact that all of the elements embodied in the 798 structure are found in the prior art does not ipso facto mean that the combined structure is not patentable. *Continental Farm Equipment Co.* v. *Love Tractor, supra,* 199 F. 2d at 205. However, we also announced in *Continental, supra,* 199 F. 2d at 205, citing *Great A. & P. Tea Co.* v. *Supermarket Equipment Corp., supra,* 340 U. S. at 152, that when combination patent claims are under examination, courts should scrutinize them with a care proportioned to the difficulty and improbability

of finding invention in an assembly of old elements. To be patentable, a combination of individually old elements must contribute something new; the elements must cooperate to produce an accumulation which exceeds the sum of its parts. E.g., *Great A. & P. Tea Co.* v. *Supermarket Equipment Corp., supra,* 340 U. S. at 151-152; *Lincoln Engineering Co.* v. *Stewart-Warner Corp.,* 303 U. S. 545, 549 (1938); *John Blue Company* v. *Dempster Mill Mfg. Co.,* 8 Cir., 275 F. 2d 668, 672-673 (1960); *Caldwell* v. *Kirk Manufacturing Company, supra,* 269 F. 2d at 508. Compare also, *Powder Power Tool Corp.* v. *Powder Actuated Tool Co.,* 7 Cir., 230 F. 2d 409, 415-416 (1956). Stated differently, "The bringing together of old elements in a mechanism involving no new principle, to produce an old result, however skillfully done, even though the result marks an advance in efficiency and utility, is but an exercise of mechanical skill and not invention." *General Bronze Corp.* v. *Cupples Products Corp.,* 8 Cir., 189 F. 2d 154, 161 (1951).

Our task is to first ascertain whether the trial court applied the proper legal standard in determining the validity of Patent 798, and then to decide whether the patent satisfies the requirements of this test. At this point, we note that the 798 Patent has been held valid on two occasions in appeals before the Fifth Circuit. *Jeoffroy Mfg., Inc.* v. *Graham,* 219 F. 2d 511 (1955), cert. denied, 350 U. S. 826 (1955), and *Graham* v. *Cockshutt Farm Equipment, Inc.,* 256 F. 2d 358 (1958). Unlike our court, the Fifth Circuit has "long recognized . . . that an improvement combination is patentable even though its constituent elements are singly revealed by the prior art, where . . . it produces an *old result in a cheaper and otherwise more advantageous way.*" (Emphasis supplied). 219 F. 2d at 519. For other recognition by the Fifth Circuit of the "old result in a

more efficient and economical way'' see, *Cornell* v. *Adams Engineering Company, supra,* 258 F. 2d at 875-876.

Undoubtedly, and perhaps understandably, the trial court below was at least partially motivated in its decision by the two prior Fifth Circuit cases involving Patent 798. Of course, the decisions of another circuit are entitled to respect and are not to be brushed aside lightly, but they are not binding upon appellants in this case, nor upon us. See *Aeration Processes* v. *Lange,* 8 Cir., 196 F. 2d 981, 982 (1952), cert. denied, 344 U. S. 834 (1952). It is for this court, upon the record here, including the arguments, stipulations, and concessions, to decide whether Patent 798 is valid.

Here, the trial court couched its Finding XV rather precisely in the statutory standard of invention found in 35 U.S.C. §103, and found that the 798 Patent structure would not have been obvious at the time it was made to a person having ordinary skill in the art. But, other findings of the court lay stress on "an *improved* functional result," and nowhere does the court find any new or significantly different result. Seemingly, the trial court failed to apply the more exacting standard which in our view is implicit in the teachings of the Supreme Court in *Cuno Engineering Corporation, supra,* 314 U. S. 84, and *Great A. & P. Tea Co., supra,* 340 U.S. 147, and which we have applied in numerous cases subsequent thereto.

Furthermore, even assuming that the trial court's finding of "a slight but significant difference in the flexing of the forward portion of the shank that is not found in the prior art'' can be construed as a finding of a new result, the court's further finding that Patent 798 exhibits invention and would not have been obvious to a person having ordinary skill in the art is clearly erroneous. The alleged

patentable difference between the 798 structure and the prior art lies in the arrangement of the 798 structure of the shank *below* the plate of the pivoted member, permitting the shank to flex throughout its length and particularly permitting the forward portion of the shank to flex downwardly *away* from the plate. Theoretically, at least, when the plate is below the shank, as in the prior art, there is a tendency of the shank to bend *against* the plate and when the plate is above, as in the 798 Patent, there is a tendency of the shank to bend *away from* the plate.

But is this difference significant enough to support the patent? We think not. Painstaking examination of the entire record, including the testimony of the experts, convinces us that the changes in the prior art embodied in the 798 Patent involve only application of mechanical ability, and that there is no adequate evidentiary support for the trial court's finding of invention. As surely as the disc harrow device in *Continental Farm Equipment Co.* v. *Love Tractor, supra,* 199 F. 2d 202, and the animal rubbing and oiling apparatus in *Caldwell* v. *Kirk Manufacturing Company, supra,* 269 F. 2d 506—to name but two, did not involve inventive genius, neither does the rearrangement of shank, plate and pivot pin in the 798 structure. While perhaps more efficient, the inversion of the parts so as to allow the shank to flex downwardly away from the plate above it did not bring about a significantly new or different result, and would have been obvious to a person having ordinary skill in the art.

Additionally, it is significant that in the 798 Patent claims, nothing is mentioned about the shank flex which became the basic reason for sustaining the validity of the patent in the trial court. To be sure, it is the claim that measures the grant to the patentee, *Briggs & Stratton Cor-*

*poration* v. *Clinton Machine Co., supra,* 247 F. 2d at 400, and here the claims of the 798 Patent are silent concerning the alleged flex.[2] Appellants point out that, to the contrary, any flexing of the shank away from the plate portion of the pivoted member would be in direct conflict with the claims which specify that the means connecting the shank to the plate maintain "the upper face of the shank in *constant continuous* contact with the underface of said plate portion of the shank attaching member." (Emphasis supplied).[3] See entire claims set forth, *supra,* 216 F. Supp. at 274-275.

It is also interesting to note that in the early stages of this case appellees propounded three interrogatories under Rule 33, Fed R. Civ. P., inquiring as to flex in the shank of appellants' accused devices. Appellants objected

---

[2]In *Lincoln Engineering Co.* v. *Stewart-Warner Corp., supra,* 303 U. S. at 550, the Supreme Court, in refusing to accept a suggestion that a function, not mentioned in the specifications of the patent, was significantly new and different so as to support the validity of the patent, stated:

> "The suggesion seems to be an afterthought. No such function . . . is hinted at in the specifications of the patent. If this were so vital an element in the functioning of the apparatus it is strange that all mention of it was omitted."

[3]Appellees take issue with this assertion, stating that appellants "are interpreting the wording of the claims to specify that the contact between the upper face of the shank and the under face of the plate portion is for the entire length of those faces, but the claims do not say that. *There is no extent of such contact specified in the claims.* Actually in the structure the bolt and nut at the forward end of the plate and shank maintain the upper face of the shank in constant continuous contact with the under face of the plate portion of the shank-attaching member at that part where the bolt and nut pass through. . . . The flexing is in that portion of the shank that is rearwardly of that bolt. . . ." (Emphasis supplied.)

on the grounds that the interrogatories were not relevant, and Judge Ridge—then sitting on the case—sustained the objections, stating:

> "These interrogatories relate to a flexing of the shank of the accused device, and appear irrelevant since such a flexing is not a claim of the patent in suit and Plaintiffs do not undertake to otherwise demonstrate the relevancy of such inquiry."

In conclusion, we observe once again that the Constitution, Article I, Section 8, Clause 8, authorizes Congress to reward inventive genius but not mechanical skill alone. *Cuno Engineering Corporation* v. *Automatic Devices Corporation, supra,* 314 U. S. at 91; *Steffan* v. *Weber Heating and Sheet Metal Company, supra,* 237 F. 2d at 604. The public is a silent but an important and interested party in all patent litigation, and is entitled to protection against the monopolization of what is not lawfully patentable. *Rota-Carb Corporation* v. *Frye Manufacturing Company,* 8 Cir., 313 F. 2d 443, 444 (1963). For a recent discussion of the purpose of federal patent law and the need to guard the rights of the public, see *Sears, Roebuck & Co.* v. *Stiffel Co.,* 376 U. S. 225, 228-231 (1964).

Since we have concluded that the 798 Patent is invalid, there is obviously no need to consider the infringement issue.

Accordingly, and for the reasons stated in the opinion, the judgment is reversed and the case remanded with directions to dismiss the action.

A true copy.

Attest:

*Clerk, U. S. Court of Appeals, Eighth Circuit.*

## APPENDIX B

## JUDGMENT.

# United States Court of Appeals

### FOR THE EIGHTH CIRCUIT.

No. 17,441.

| | |
|---|---|
| John Deere Company of Kansas City, a Corporation, and Deere & Company, a Corporation, Appellants, v. William T. Graham, and Graham Plow, Inc. | Appeal from the United States District Court for the Western District of Missouri. |

This cause came on to be heard on the record from the United States District Court for the Western District of Missouri, and was argued by counsel.

On Consideration Whereof, It is now here Ordered and Adjudged by this Court that the judgment of the said District Court in this cause be, and the same is hereby, reversed with costs; and that John Deere Company of Kansas City, a Corporation, and Deere & Company a corporation, have and recover against William T. Graham, and Graham Plow, Inc., the sum of Four Thousand Two Hundred Twenty-two and 32/100 Dollars for their costs in this behalf expended and have execution therefor.

And it is further Ordered by this Court that this cause be, and it is hereby, remanded to the said District Court with directions to dismiss the action.

June 18, 1964.

APPENDIX C

# United States Court of Appeals

## FOR THE EIGHTH CIRCUIT.

September Term, 1963.

---

No. 17,441

---

| | |
|---|---|
| John Deere Company of Kansas City, a corporation, and Deere & Company, a corporation, Appellants, v. William T. Graham and Graham Plow, Inc. | Appeal from the United States District Court for the Western District of Missouri. |

Petition of appellees for rehearing filed in this cause having been considered, it is now here ordered by this Court that the same be, and it is hereby, denied.

July 13, 1964.

APPENDIX D

IN THE

# United States Court of Appeals

FOR THE FIFTH CIRCUIT

---

No. 15117

---

JEOFFROY MFG., INC.,
Appellant,

versus

WILLIAM T. GRAHAM,
Appellee.

AND

WILLIAM T. GRAHAM,
Appellant,

versus

JEOFFROY MFG., INC.,
Appellee.

---

*Appeals from the United States District Court for the Northern District of Texas.*

---

(February 11, 1955.)

---

Before HUTCHESON, Chief Judge, RIVES, Circuit Judge, and DAWKINS, District Judge.

## Appendix D

RIVES, Circuit Judge: This suit was filed by Jeoffroy Mfg. Inc. on May 15, 1952, for declaratory judgment to determine whether a spring trip device used on its commercially manufactured plow infringes United States Patent No. 2,493,811, issued on January 10, 1950 as "Vibrating Plow and Mounting Therefor," and owned by William T. Graham.[1]

By counterclaim, Graham charged Jeoffroy with infringement of its aforementioned patent, No. 2,493,811, and also with infringement of its United States Patent No. 2,627,798, issued February 10, 1953, and entitled "Clamp for Vibrating Shank Plows."

On a prior appeal involving the same parties and Graham's No. 2,493,811 patent, this Court affirmed with immaterial modification the judgment of the district court holding that patent valid and infringed by a device formerly manufactured and sold by Jeoffroy. See *Jeoffroy Mfg., Inc.* v. *Graham,* 206 F. 2d 772, cert. den. 347 U. S. 920.

The district court held patent No. 2,493,811 valid and infringed, and further held patent No. 2,627,798 invalid for lack of invention.[2] Jeoffroy has appealed only from

---

[1]Both the corporate appellant, Jeoffroy Mfg., and the individual appellee, William T. Graham, are located at Amarillo, Texas, where they are competitively engaged in the manufacture and sale of commercial plows. To avoid confusion in referring to the parties in the two consolidated appeals, they will hereinafter be called Jeoffroy and Graham respectively.

[2]The district court's opinion is succinctly set forth in two letters to counsel for the respective parties, which were filed of record but are not officially reported. The most pertinent portions of those letters read as follows:

"Patent No. 2,493,811

"The Graham Patent 811 may rank as a pioneer patent within the sense of some strong cases, including a number

that portion of the judgment holding the former Graham Patent infringed, while Graham has appealed from the holding as to invalidity of his later improvement patent for lack of invention. In view of this Court's decision on

---

of combination patents, but I lean to the opinion that it is ruled rather by the teaching of other leading cases, and embodies a meritorious, yet not an outright pioneer, invention. Even if it is only a meritorious invention, being of proven worth, the patentee is entitled to claim a substantial range of equivalents, consistently with the context of the patent, the Patent Office history and the prior art and use. * * *

"The said Graham patent has already been adjudged valid by this Court in an earlier case, and in that previous trial the prior art was examined in reference to the validity of the patent. The inquiry is not being retraced from that standpoint at the present time, but has been noticed as it bears on the scope of claims and proper range of equivalents under the said patent. * * *

"Next in order is the question of infringement. The Graham patent, claim 5, in the element of a shank between the fixed member and the movable member of the bracket and in movable engagement with the said parts will not read on the accused Joeffroy device. The argument on the point of position that the stirrup and the yoke in the Jeoffroy structure suffice to put the shank between a part of the movable member and the fixed member of the Graham construction is too far fetched. * * * Likewise the correlated claim language 'in movable engagement with the said parts' probably will not read on the accused Jeoffroy structure. * * *

"The fact that the Graham patent, claim 5, cannot be read literally on the accused device is not at all conclusive against infringement. The doctrine of equivalents must be reckoned with, and most often comes into play with apparatus or mechanical inventions. * * * True in the accused device the shank is placed below the movable member of the bracket, unlike the patent arrangement above said movable member, but that is simply a reversal of position, and the Courts speak with one voice in saying that mere transportation of members in a combination structure, where there is no actual change of function, is just an equivalent and fails to avoid infringement. * * *

"The accused structure has simply supplanted the dual function of the spring bolt in the patented structure by the

the prior appeal, no issue is presented as to the validity of patent No. 2,493,811, the basic question confronting us for determination being whether that patent is infringed by the accused device now manufactured and

---

expedient of a new element, and with that change cessation of longitudinal motion of the shank follows. The mere elimination of virtually all of that particular motion, which was not indispensable anyway to the principle of the invention claimed in the Graham patent, results incidentally from an example of using two elements to do what was done before by a double duty element and such an alteration will not avoid infringement of the patent. * * *

"* * * my conclusion (is) that the Graham patent, as aided by the doctrine of equivalents, is infringed in claims 5 and 6 by the Jeoffroy structure.

"Patent No. 2,627,798

"The recent Graham structure covered in the above numbered patent, issued in 1953, is a plain counterpart of the accused structure made by Jeoffroy. The same reasons for finding infringement against Jeoffroy, also disclose invalidity of this latest Graham patent. It is a case of double patenting between the two Graham patents, and so under the ban of a well settled rule of patent law. If the said patent were not invalid as a double patent, in any event it would be for lack of invention. This patent 798 does mark an improvement bettering efficiency and economy over patent 811, but that is not enough to constitute invention. The said patent 811 was the springboard and from that vantage background the next step from that structure to the structure of patent 798, was well within the capacity of a skilled mechanic.

"Counsel will submit a decree on the cross action as to the infringement of patent 811, and adjudging patent 798 invalid * * * "

The above quotations are from the Court's letter opinion, dated September 9, 1963, announcing its original decision In overruling Jeoffroy's motion for rehearing, it further amplified its prior letter opinion as follows:

"Plaintiff's counsel * * * insist that the shank in the latest Jeoffroy bracket, by being bolted towards the front end of the movable fulcrum plate, is, in effect, hinged directly to the plow frame. Thus it is likened to the operation of the prior art in contrast to that of Patent No. 811. It is difficult for me to see how such claim is much better for

sold by Jeoffroy. However, Jeoffroy does defensively assert the alleged invalidity of Graham's improvement patent No. 2,627,798, both as anticipated in fact by the prior art and invalid in law for lack of invention, though it frankly concedes infringement of that patent by its new structure if the patent is valid.

I. Issue of infringement of Patent No. 2,493,811.

We think the basic structure, mode of operation and purpose of Patent No. 2,493,811, hereinafter simply referred to as the Graham 811 patent, is adequately set forth in our former decision and need not be restated

---

this last Jeoffroy type than in the earlier litigation. Of course, the nib and socket pattern in that earlier type did not hold the shank and the fulcrum plate together so rigidly as can be done by the nut and bolt in the present type, but I think the difference inconsequential from the standpoint of the present inquiry. In my opinion, consistency is lost in any theory that the prior art was insufficient to shelter the earlier Jeoffroy type, but is sufficient to shelter the latest Jeoffroy type. * * *

"* * * The argument in support of the motion before the Court stresses the contention that the modes of operation are entirely different in the Graham structure and the Jeoffroy structure. The gist of it is that the Graham structure features a shank nested between a movable and a fixed member of the bracket and without any rigid attachment, while the Jeoffroy structure uses a shank tightly bolted to the movable member of the bracket, like its alleged prototypes in the mechanical art and that by such assembly it is, in effect, hinged directly on a fixed member of the bracket or plow frame. I am unable to agree with that position. In my opinion, the shank mounted in the way stated retains tangibly more useful motion and vibration than would be true if it were actually attached rigidly to a fixed member. * * *

"* * * the only essentials, as I see, are a finding of infringement of Patent No. 811 and invalidity of Patent No. 798, together with the conclusion that defendant is entitled to injunctive relief, but reserving the question of damages for future determination. * * *"

here. *Jeoffroy Mfg.* v. *Graham, supra,* at pp. 773-774. Only claims 5 and 6 of this patent are here involved.[3] Our inquiry on this infringement issue is further narrowed to a consideration of the specific language of claim 5, in view of Jeoffroy's admission that, while the bracket of its accused device exhibits some divergence in structure from the channel shaped formation of claim 6, it must nevertheless be conceded "that if we infringe Claim 5 we likewise infringe Claim 6."

We think the district court properly held that claim 5 could not be read in express terms upon the new Jeoffroy structure, since the Jeoffroy shank is not "be-

[3]These two claims in issue of Graham's 811 patent read as follows:

"5. In a plow having a frame and a ground working tool provided with a shank adapted to rock relatively to the frame when the plow is in operation in a forward direction, a mounting for attaching and supporting the shank of the ground working tool from the frame including a clamp fixedly attached to the frame, the clamp including a part that is fixed to the frame and another part pivotally mounted on the fixed part, the shank having an end portion thereof between said parts and in movable engagement with the said parts, a coil spring having one end thereof in engagement with one of said parts, means at the other end of the spring connected with the other of said parts to maintain the spring in position and for holding the said parts of the clamp with the end portion of the shank therebetween in their resiliently held-together association so that when the shank is rocked or moved the end portion of the shank between the parts will cause the movable part of the clamp to move away from the fixed part along with said end portion and back to normal position with the end portion of the shank contactingly held between the two parts, and means on one of the parts engageable with a part of the end portion of the shank to prevent disengagement of the shank from the clamp but to allow same to rock.

"6. In a device as claimed in and by claim 5, wherein the fixed part of the clamp is of channel shape formation and the said end portion of the shank is disposed therein and prevented from moving laterally."

tween the fixed member and the moveable member of the bracket and in moveable engagement with the said parts." (See footnote 2, *supra.*) Like the district court, we reject as "too far fetched" Graham's insistence that the position of the Jeoffroy stirrup and yoke below the shank sufficiently locates the shank between at least a part of the moveable member and fixed member so as to satisfy the literal language of the claim. Graham's insistence in this respect, like his further contention that the Jeoffroy structure meets the call of claim 5 for a shank "in moveable engagement with the said parts" because of the looseness in the bolt fitting which connects the yoke, shank, and hinge and the small amount of play at the forward end of the shank between the stirrup and yoke, seems to us to stretch the express wording of claim 5 beyond the fair intendment of the language used in order to cover a substantially divergent structure. Irrespective, however, of our adoption of the district court's conclusion that no infringement exists in express terms, there nevertheless remains for our consideration the question of whether the trial court justifiably held claims 5 and 6 of Graham's 811 patent infringed under a broad application of the doctrine of equivalents.

We agree with the district court's statement that Graham's 811 patent "embodies a meritorious, yet not an outright pioneer invention," and that it is entitled to a range of equivalents consistent "with the context of the patent, the Patent Office history and the prior art and use." (Footnote 2, *supra.*) For reasons hereinafter stated however, we disagree with its conclusion that the doctrine of equivalents should be broadly applied in this instance so as to bring the new Jeoffroy structure within the condemnation of Claims 5 and 6.

## Appendix D

If the litigation involving this patent were of first impression, we might appropriately concede that Graham's protection thereunder ought not be confined to this type structure disclosed by the patent claims and specifications. Under such circumstances, the trial court's finding of a mere transposition of members in the accused structure, with "no actual change of function," might be sufficient to warrant its finding of equivalence. *Graver Mfg. Co.* v. *Linde Co.*, 339 U. S. 605, 609. However, we think the prior course of this litigation, in the Patent Office and in this Court, justly requires such limitation of the scope of the Graham 811 claims in issue as would necessarily prevent Graham from successfully urging infringement by the new Jeoffroy device.

In the former suit involving the old infringing Jeoffroy structure (*Jeoffray Mfg., Inc.* v. *Graham, supra*), in order to distinguish the inventive concept embodied in his 811 patent from the prior art, Graham repeatedly and successfully urged upon the district court and this Court that his patent was not anticipated by a structure in which the shank is either directly pivoted on a fixed member,[4] or is attached to a hinge member that is directly

[4]For example, in his brief on the former appeal, Graham made the following argument as to validity of his 811 patent, the substance of which was adopted by this Court in its opinion:

"Prior art patents relied on by Defendants have not contributed anything to this art and particularly the art of resiliently and frictionally holding the shank of a ground working tool between a fixed part and a movable part, i.e., the bracket on the H-beam and the fulcrum plate pivotally mounted on the bracket. Graham was the first to produce a device which successfully provided for mounting of a ground working tool shank that would rock and yet not have the shank hinged directly on a fixed member, this new structure providing an action of the ground working tool never before accomplished, and in entirely different distribution of forces which was not possible in prior devices."

pivoted on the fixed member, yet he now contends that the new Jeoffroy structure, which we think embodies substantially the type attachment there distinguished by him, infringes this same patent. Moreover, Graham also testified in both the former and present suits that longitudinal motion of the shank relative to the hinge member was at least an important part of his invention,[5] yet he now urges that the absence of such motion in Jeoffroy's new structure is practically immaterial and insufficient to avoid infringement.[6] Furthermore, in filing application for his improvement patent, No. 2,627,798, with the Patent Office, which patent, if valid, both parties agree is infringed by the practically identical new Jeoffroy device, Graham contended that his shank was "rigidly secured" to the hinge member,[7] yet he now asserts in order to sustain his present charge of infringement that the new Jeoffroy device, its structural twin and counter-

---

[5]Graham's testimony in the present suit on this issue reads as follows:

"Q. Do you consider longitudinal movement between the fulcrum member and the shank—or to put it another way—longitudinal movement of the shank relative to the fulcrum member in your patented structure as shown in your old patent 2,493,811 to be an important feature of that patent?

"A. Yes, I think it's rather important.

"Q. Do you consider that as a part of the invention, the alleged invention, Mr. Graham?

"A. Yes, I think so."

[6]See Paragraph 5 of trial court's findings, footnote (2), supra.

[7]The file wrapper of Graham's new patent, No. 2,627,798, reveals that Graham there represented one of the objects of his alleged invention was "to provide a mounting which includes a fixed part and a movable part pivotally connected with the fixed part and having a shank attaching portion to which the shank is *rigidly secured* and resiliently retained on the fixed part." (Emphasis supplied.)

part, is "in moveable engagement" with the hinge member. Similarly, in prosecuting his new 2,627,798 patent application before the Patent Office he successfully urged, in effect, that patentable novelty and invention existed therein over his old 811 patent because, among other features, his different method of attaching the shank in his improvement patent, i.e. its location beneath the hinge member and rigid attachment thereto, resulted in a different mode of operation and distribution of stresses from that which had precipitated an inordinate amount of wear in the old sliding pivot and fulcrum assembly of his 811 patent,[8] yet he now contends that the new Jeoffroy structure, which concededly duplicates the structure of his new patent, nevertheless retains that same degree of flexibility and method of operation of his old 811 pat-

---

[8]For example, in response to the Patent Examiner's original rejection of all of the claims of his improvement patent as anticipated by his old 811 patent Graham's counsel argued as follows:

"At the first of the interviews the Examiner's rejection of the claims on applicant's patent was discussed. It was pointed out that the present construction is an improvement over the structure disclosed in applicant's (811) patent. The patented structure has proved a highly commercial success and has made this type of plow satisfactory for substantially all plowing conditions. It was found, however, that wear occurred between the shank and the fixed part of the clamp where the fulcrum shifted from the pin to that portion of the fixed part of the clamp directly at the rear end of the clamping face thereof. It was pointed out that the present construction avoided this wear by inserting the movable part between the plowing shank and the fixed part and by locating the pivot to avoid rubbing contact of the pivoted part with the fixed part of the clamp. With this arrangement the vibratory movement of the shank acted on the pivoted part or shank attaching member of the clamp. This shifting of the wear point to the pivoted part facilitates repair and replacement when wear does occur."

ented structure as now fairly entitles him to prevail on the issue of infringement.[9]

Graham argues, in substance, that the claimed inconsistencies in his various positions before the Patent Office, the district court and this Court, are more illusory than real; that in defensively asserting these alleged inconsistencies Jeofroy is seeking to avoid infringement on a new theory and technical basis by quoting prior statements and arguments in other independent and materially unrelated proceedings out of context, and either according them a binding effect never intended, or interpreting the claimed structural and operational differences between Graham's 811 patent and the teachings of the prior art then relied upon as conclusive against infringement here, when at most the previously asserted distinguishing features were merely some among many which could have been urged to avoid anticipation and establish validity; that, in any event, the omission of these elements in the accused device is insufficient to avoid infringement under the applicable range of equivalents. In view of these insistencies, we have re-examined Graham's arguments on the former appeal, as compared with those now urged by him, but we cannot agree that they are immaterial to his present charge of infringement, or that they do not effectively nullify the force which might otherwise flow from the trial court's finding and his argument that the new Jeoffroy device exemplifies a mere colorable departure in structure and method of operation from his

[9]The trial court apparently had no opportunity in its original decision to consider from this Court's viewpoint the effect of Graham's inconsistent positions as limiting the scope of his 811 claims, since its original letter decision was rendered on the same day as this Court's decision on the former appeal, i.e., September 9, 1953.

811 patent which is insufficient to avoid infringement. (Footnote 2, *supra.*) While we expressly disavow any intimation of actionable bad faith on the part of the patentee, Graham, in assuming positions for the purpose of avoiding anticipation and establishing validity of both his 811 and improvement patent, which appear to us inconsistent with positions now assumed for the purpose of prevailing on the present issue of infringement, we do hold, contrary to, but in the language of the district court, that "the context of the patent, the Patent Office history and the prior art and use" fairly limit and restrict the scope of Graham's monopoly under 811 to a structure wherein the shank is mounted between a fixed part and a moveable part, in "moveable engagement" with each of said parts, and clampingly held thereby; that the prior art, the physical exhibits, the testimony, and this Court's decision on the former appeal,[10] viewed as a whole, fairly establish that the new Jeoffroy structure may not logically be viewed as embracing the essential elements of the 811 patent claims, either literally or by equivalence, and that the trial court's finding of infringement of claims 5 and 6 of the Graham 811 patent may not therefore be sustained. *Cf. Livesay Industries* v. *Livesay Window Co.,* 5 Cir., 202 F. 2d 378, 382. See *Graver Mfg. Co.* v. *Linde Co.,* 339 U. S. 605, 609; *Westinghouse* v. *Boyden*

[10]While it is true that this Court, in its decision on the former appeal, did not expressly restrict the scope of Graham's 811 claims to the precise structure disclosed by the patent, we think the opinion itself fairly evidences this Court's acceptance of Graham's repeated arguments that the essentially novel concept of that invention was "the idea of resilient and frictional engagement of the shank of a ground working tool between a fixed part and a movable part," etc. (See 206 F. 2d 777), and that he may not now extend the scope of his 811 monopoly to embrace the substantially different Jeoffroy structure here claimed to infringe.

**Appendix D**

*Power Brake Co.*, 170 U. S. 537, 568; *Jungersen* v. *Baden*, 2nd. Cir., 166 F. 2d 807, 809; *Wood* v. *Peerless Motor Car Corp.*, 6th Cir., 75 F. 2d 554, 555; *Southern States Equip. Corp.* v. *USCO Power Equip. Corp.*, 5th Cir., 209 F. 2d 111, 120; *Stewart-Warner Corp.* v. *Lone Star Gas Co.*, 5th Cir., 195 F. 2d 645, 648; *Independent Pneumatic Tool Co.* v. *Chicago Pneumatic Tool Co.*, 7th Cir., 194 F. 2d 945, 947; *Chicago Forging & Mfg. Co.* v. *Bade-Cummins Mfg. Co.*, 6th Cir., 63 F. 2d 928, 929-930.

II. Validity of Graham's Improvement Patent, No. 2,627,798.

The application for Graham Patent No. 2,627,798, hereinafter simply called 798, was filed on August 27, 1951, and the patent issued February 10, 1953. It relates to an improvement of the original structure revealed by Graham's old 811 patent. While it is basically akin to the structure thereby disclosed and described in our former decision (*Jeoffroy Mfg. Inc.* v. *Graham, supra* at pp 773-774), it does exhibit distinguishing structural features in that the pivot pin and fulcrum plate have been relocated above the shank, instead of below the shank as in Graham's old 811 patent, and the fulcrum plate has a stirrup device which supports the shank at a point adjacent the pivot pin. The 798 patented structure also operates on a fixed, rotating pivot instead of the loose, sliding pivot of the old Graham 811 device.

Jeoffroy concedes that Graham's new 798 patent exhibits a divergent structure in the following particulars: (1) the location of the pivot pin above the shank; (2) the short bolt which attaches the shank and shank attaching member to each other at the forward ends thereof; (3) the rearward extending lugs on the fixed mem-

ber and the upward extending lug on the hinge member, through which the pivot pin is inserted to form the pivot; and (4) the downward extending loop or stirrup which embraces the shank at the rear of the shank attaching member. According to Jeoffroy, the sum of the above changes constitutes no more than a manufacturer's modification made for the purpose of reducing operational stress and wear in the basic 811 patent structure, which the trial court correctly viewed as "within the capacity of a skilled mechanic," and therefore lacking in invention.

On the other hand, Graham contends that, while his 798 patent uses "the basic idea of the fulcrum plate and the moveable engagement of the shank," it in effect produces an old result in a more advantageous way by substituting the fixed and rotating pivot, to some extent revealed by prior art devices, for the wear-producing, sliding and shifting pivot of 811, at the same time retaining by means of its particular shank and pivot arrangement substantially that same degree of flexibility and resiliency which was such an advantageous feature of its 811 predecessor; that claims 1 and 2 of 798[11] are not invalid for "double patenting" and lack of invention, as held by the district court, but "clearly specify a particular arrangement and relationship of the parts that is not

[11]We think these two detailed and lengthy claims of Graham's 798 patent, the only ones granted by the Patent Office, need not be set forth in *haec verba* here. Generally, they are directed to the same type improved clamp structure and shank arrangement exhibited by the new Jeoffroy device, though specifically they recite means for maintaining the shank in "constant and continuous contact" with the shank attaching member.

found in the Graham (811) Patent,'"[12] as evidenced by issuance of 798 by the Patent Office after 811 was distinguished as a prior reference; that the claims of 798 further cannot be read upon the structure of 811 either literally or by equivalence; that 798 actually reveals a valid combination and patentable improvement over 811 and the most pertinent other prior art and use,[13] which was beyond conception by an ordinary artisan in the agricultural implement trade; finally, since infringement is admitted, Graham is clearly entitled to the injunctive relief and accounting prayed for.

With commendable candor Jeoffroy further concedes that "its accused structure cannot be distinguished in any material respect from Patent No. 2,627,798"; that "the Trial Court was clearly wrong in concluding that Patent No. 2,627,798 is void as double patenting of the original Graham invention";[14] that no "single prior reference patent or structure anticipates completely the claims of Patent No. 2,627,798" and "the claims will not read on any one of the references because there are

---

[12]Compare this argument with Graham's argument on the infringement issue that his 798 patent's twin and counterpart, the new Jeoffroy device, is a structure substantially equivalent to that disclosed by his 811 patent.

[13]A number of the prior art patents and uses principally relied upon as anticipatory of Graham's 798 patent are the same as those previously cited by Jeoffroy in his unsuccessful attempt to upset the validity of 811 on the former appeal (See 206 F. 2d at p. 776), and will not be specifically reviewed in this opinion.

[14]Apparently, consistency and logic compels Jeoffroy's admission in brief that, if the trial court was wrong in its factual finding of equivalence between its new structure and Graham's 811 patent, which he asserts and we have held that it was, then Graham's 798 patent cannot logically be viewed as invalid for "double patenting."

specific differences of structure and of function"; and that "unquestionably Graham's new patent structure is a definite improvement over the old." However, on the issue of anticipation, Jeoffroy does insist that the prior art "as a whole" contains "the storehouse of information from which any skilled workman could draw to effect the changes made by Graham," particularly since a number of the improvements adopted were separately indicated by various prior art devices such as Lamprell, Erdman, Drader, Traeger, Dunbar, Carter, Moore, the Danish patent to Petersen, and the Valley City and supposed Helfeld and McKee prior use devices. See and *cf. Parks* v. *Booth,* 102 U. S. 96, 104, cited with approval in *Jeoffroy Mfg., Inc.* v. *Graham, supra,* at p. 777. On the issue of claimed invalidity *vel non* for lack of invention, Jeoffroy relies mainly on the Supreme Court's landmark decision in *Great A. & P. Tea Co.* v. *Supermarket Equipment Corp.,* 340 U. S. 147, apparently the favorite sanctuary of alleged mechanical patent infringers, and vigorously insists that the stricter test of invention there enunciated and adhered to by former decisions of this Court is not met by Graham's 798 patent. See *Ritchie* v. *Lewis Browning Mfg. Co.,* 5th Cir., 196 F. 2d 434, 437; *Graham* v. *Jeoffroy Mfg., Inc.,* 5th Cir., 206 F. 2d 769, 771-772; *Robinson* v. *Di Gaetano,* 5th Cir., 212 F. 2d 1, 3.

Our interpretation of the prior art, the physical exhibits, and the testimony, however, compels us to disagree with the learned district court's conclusion that the 798 patent is invalid, either for "double patenting" or lack of invention. Though we do agree that 798, as an improvement combination, is not entitled to any broad degree of protection over 811, it still seems to us that its hybrid type structure combining the wear-resisting rotat-

ing pivot, in part reminiscent of the prior art, with the new shank and stirrup arrangement permitting some of that same advantageous flexibility inherent in the old 811 structure, reveals sufficient indicia of novelty and invention to justify limited protection. See *Southern States Equip. Corp.* v. *USCO Power Equip. Corp., supra* at p. 118. Other factors strongly influencing and, we think reinforcing our conclusion as to the validity of 798 are: (1) that presumption of validity which attends the grant of a patent by the Patent Office where, as here, it appears to have fully considered and distinguished the very prior art patents here principally relied upon as anticipation (*Southern States Equip. Corp.* v. *USCO Power Equip. Corp., supra*); (2) the rule that the burden of proof of invalidity is on the party seeking to upset a patent's *prima facie* validity from issuance, and that any reasonable doubt will be resolved against him,[15] (3) the further rule, long recognized by this Court, that an improvement combination is patentable even though its constituent elements are singly revealed by the prior art, where, as here, it produces an old result in a cheaper and otherwise more advantageous way;[16] (4) the trial court's findings and Jeoffroy's significant admissions, heretofore quoted, as to the improved efficiency and economy in the 798 structure, as well as the lack of disclosure thereof

---

[15]See Title 35 U.S.C.A. Sec. 282; Mumm v. Decker & Sons, 301 U. S. 168, 171, 81 L.Ed. 983, 985; Radio Corp. v. Radio Engineering Lab., Inc., 293 U. S. 1, 7, 8, 79 L. Ed. 163; Hughes Tool Co. v. Robertson Rock Bit Co., Inc., 80 F. Supp. 809 (Aff. 176 F. 2d 783, 5th Cir.).

[16]Robertson Rock Bit Co. v. Hughes Tool Co., 5th Cir., 176 F. 2d 783, 790, 791; Troup, et al. v. Vox, 5th Cir., 133 F. 2d 83; O. K. Jelks & Son v. Tom Huston Peanut Co., 5th Cir., 52 F. 2d 4, 8; Huston v. Barrett, 5th Cir., 23 F 2d 907.

by any single device or group of devices in the prior art; (5) the fact that Jeoffroy himself apparently considered the 798 structure independently patentable over 811 and the prior art, as evidenced by his filing of an application for a patent on its counterpart and subsequent withdrawal thereof only when Graham's 798 patent was issued first; and (6) finally, the fact that the force which might otherwise attach to the eminent trial court's conclusion as to invalidity, insofar as based on testimony by Jeoffroy's witness, Witherspoon, that in his opinion the improvements embodied in 798 were within the capacity of an ordinary skilled mechanic, seems to us considerably weakened by the fact that this witness was admittedly not a patent expert, but only an engineer testifying for his first time in a patent suit.[17] We conclude, therefore, that Graham's 798 patent is not invalid, either for "double patenting" or lack of invention, but exhibits patenable novelty and invention not effectively anticipated by any of the prior art patents or alleged public uses relied upon. See *Mumm* v. *Decker & Sons,* 301 U. S. 168, 171; *Carnegie Steel Co.* v. *Cambria Iron Co.,* 185 U. S. 403; *Robertson Rock Bit Co.* v. *Hughes Tool Co.,* 5th Cir., 176 F. 2d 783, 790-791; *Cline Electric Mfg. Co., et al.,* v. *Kohler,* 7th Cir., 27 F. 2d 638, 641; *Carson* v. *American Smelting & Refining Co.,* 9th Cir., 11 F. 2d 764, 770-772.

In response to Jeoffroy's intimation in brief that Graham's failure to manufacture commercially the device of his 798 improvement patent shows that he was more interested in extending the scope of his old 811 monoply

[17]While we recognize that the weight to be accorded the testimony of this witness was primarily for the trial court, we still believe it is an appropriate fact for our consideration in reviewing the trial court's finding of invalidity in what appears to us a close case.

than in providing the public with an improved spring clamp device, we can only add that our patent laws have generally acknowledged the validity of the maxim, "prior *tempore potior jure,*" regardless of whether a prospective patentee is guided by altruistic motives, and one who permits others to pre-empt him in securing monoply protection for patentable devices must necessarily be confined to the struggle for recognition and success amidst the normal forces of competition, unaided by the impetus of a statutory monopoly which rightfully adheres in another.

On the appeal of Jeoffroy Mfg., Inc., the judgment holding claims 5 and 6 Graham's patent No. 2,493,811 infringed by said Jeoffroy Mfg., Inc. is reversed. On the appeal of William T. Graham, the judgment holding the Graham patent No. 2,627,798 invalid and dismissing the counterclaim as to said patent is reversed. The cause is remanded with directions to enter judgment holding that claims 5 and 6 of Graham's No. 2,493,811 patent are not infringed by the new Jeoffroy structure, but that Graham's No. 2,627,798 improvement patent is valid and infringed thereby, and for further proceedings not inconsistent with this opinion.

REVERSED AND REMANDED WITH DIRECTIONS.

A True Copy:
Teste:

Clerk of the United States Court of
Appeals for the Fifth Circuit.

APPENDIX E

IN THE

# United States Court of Appeals

FOR THE FIFTH CIRCUIT

---

No. 16966

---

JEOFFROY MFG., INC.,
Appellant,

versus

WILLIAM T. GRAHAM,
Appellee.

---

*Appeal from the United States District Court for the Northern District of Texas.*

---

(June 5, 1958.)

---

Before HUTCHESON, Chief Judge, and TUTTLE and WISDOM, Circuit Judges.

TUTTLE, Circuit Judge: This appeal deals with the Graham patent No. 2,627,798, which is also the subject of an opinion entered today under the name of William T. Graham and *Graham-Hoeme Plow Co.* v. *Cockshutt Farm Equipment Co., Inc.*, 5 Cir., 256 F. 2d 358. It is between the two opponents who have already appeared in this Court in several different cases raising questions as to the validity of this patent and its infringement *vel non* by Jeoffroy.

## Appendix E

As we have said in the other case just decided, the able trial judge has become an expert in the art of spring plow clamps of the Graham type. This naturally gives even more weight than is usually to be accorded to findings of infringement by the trial judge, for he has perforce had these very devices before him for days at a time, with the testimony of experts and argument of learned and able counsel, also by now completely steeped in the art, to assist him.

Following our decision in *Jeoffroy Mfg. Co.* v. *Graham*, 5 Cir., 219 F. 2d 511, the District Court enjoined appellant from infringing 798 patent. Subsequently appellee brought contempt proceedings against Jeoffroy for violation of the injunction. The trial court heard evidence and saw a field demonstration and held broadly that several clamps manufactured and sold by Jeoffroy infringe the Graham patent.

The real crux of the case arises from an attempt by Jeoffroy to modify its clamps which had previously been adjudicated to be infringement, by giving them characteristics which Graham testified were identified with the prior art and the departure from which afforded Graham protection in his patent.

Specifically, Graham claimed in support of his 798 patent that when the shank was forced upward against the force of the spring his 798 patent was the first arrangement of parts that permitted lateral, vertical and longitudinal flexibility of the shank without undue wear on the parts. This he accomplished by leaving some space at the first point and by having the bolt at the front end in a hole somewhat larger than the size of the bolt itself. This afforded a firm connection without rigidity and permitted longitudinal motion and a flexing of the

shank. Graham pointed out that the prior art taught only rigid fixation of the shank at the pivot point and at the forward end.

What Jeoffroy did, then, was to suspend the shank at the pivot point in a stirrup, with sufficient room for vertical movement, but he then, according to his testimony, undertook to eliminate this movement by the insertion of a set screw, which if tight, would, in fact, prevent the flexibility which Graham insisted was the principal end sought in his invention.

Graham alleged, and the court found, that when the Jeoffroy device was in use the flexibility remained. This was demonstrated by the field experiment and by motion pictures of the Jeoffroy clamp with the set screw in action. The picture was also viewed by us. It was plain that, whatever may have been intended or desired by the insertion of the set screw, in actual operation nothing used in the Jeoffroy modification prevented his clamp from operating in the same manner as does the Graham clamp. Since Jeoffroy admitted that "the literal words of both claims of the 798 patent can be read upon the Jeoffroy structures" and since Jeoffroy uses the substance of the Graham invention, the court found in favor of the patentee in the contempt proceedings.

The language used by the trial court states clearly the basis for its findings and it is adopted by us in holding that these findings are supported by the evidence and may not be set aside as clearly erroneous:

"3.

"In adopting said variants, Plaintiff was acting in good faith to the extent that it actually thought that certain contentions and arguments of Defendant's counsel

during previous patent litigation between the same parties had opened the door for Plaintiff to make some distinguishing modifications in its clamp structure by using set screws and bolt fastenings to attain rigid fixation of the shank adjacent the pivot point, and thereby gain protection for its spring clamp against any charge that same infringed the Defendant's patent.

"4.

"The set screw and bolt fastenings provide a rigid fixation of the shank adjacent the pivot point as long as the set screws or nuts are tight and when in that condition the action of the shank in the forward end is in degree materially different from that provided for in the patent structure. Furthermore, the set screw and bolt fastenings adjacent the pivot point provide a structure which is as rigid at that point as any of the prior art references except those in which the shank is welded to the pivot member. However, the arrangement and relative positioning of the members in operation is different than the prior art references and result in flexibility not possible therein.

"5.

"Jeoffroy placed decals on its plows advising the farmers to keep nuts thereon tightened at all times, but it has no reasonable expectation, despite the formality of its decals, that clamps of the Plaintiff's types would actually be used by farmers with a really rigid fixation of the shank at the pivot point, for such structures, to begin with, were adapted to easy and simple manipulation by removing or loosening set screws and loosening or reversing the bolted straps, or, at any rate, same pre-

dictably would become loosened from the play of strong forces during the normal rough usage of the clamps, as borne out by the proof that many farmers using the Jeoffroy equipment in rocky land were found with set screws and bolts loosened or missing, and with fully as much play between the shank and the stirrup as would be typical of the Graham structure in Patent 798. Evidently, the farmers using the Defendant's clamp generally must have liked it better in operation with some motion and play near the pivot point and habitually disused the set screws and bolted straps in tight position in favor of more latitude of motion for the shank.

"6.

"Since it was predictable at the time these modifications were adopted by the Plaintiff that they would not insure a really rigid fixation of the shank at the pivot point and would not eliminate the similar flexibility, as found in the Graham shank, such modifications did not change the real operation of its clamp, and, therefore, did not avoid infringement."

The judgment is affirmed.

APPENDIX F

IN THE

# United States Court of Appeals

FOR THE FIFTH CIRCUIT

---

No. 16955

---

WILLIAM T. GRAHAM and GRAHAM-HOEME PLOW CO., INC.,

Appellant,

versus

COCKSHUTT FARM EQUIPMENT, INC.,

Appellee.

---

*Appeal from the United States District Court for the Northern District of Texas.*

---

(June 5, 1958.)

---

Before HUTCHESON, Chief Judge, and TUTTLE and WISDOM, Circuit Judges.

TUTTLE, Circuit Judge: This is an appeal from a judgment of the trial court finding the Graham Patent No. 2,627,798, "Clamp for Vibrating Shank Plows" valid but not infringed. There is no cross appeal by appellee from the finding of validity of the patent, but appellee contends this issue is still open for review under our recent decision in *Guiberson Corp.* v. *Equipment Engineers, Inc.*, 5 Cir., F. 2d.

## Appendix F

This patent is not a stranger to this Court, it having been the subject of an opinion in which we reversed the trial court's finding that it was invalid. *Jeoffroy Mfg. Co., Inc.* v. *William T. Graham,* 5 Cir., 219 F. 2d 511. It is also the subject of another decision which comes up on a citation by Graham for contempt of the trial court's injunction against infringement by Jeoffroy Mfg., Inc. in a case decided simultaneously herewith. We think it unnecessary, therefore, to make a detailed description of the patent except as it is germane to our discussion of the alleged infringement.

We agree with appellee that this Court still has the power to change its position as to the validity of the Graham patent No. 2,627,798, even though we have previously held it valid, because the alleged infringer here is a different party and is not bound either by *res judicata* or estoppel by judgment. We also agree that this question is open to us on appeal, even though no cross appal was taken from the Court's judgment in favor of validity. See *The Guiberson Corp.* v. *Equipment Engineers, Inc., supra.* We conclude, however, after careful consideration, that our decision previously made as to the validity of this patent should stand. We, therefore, turn to the question of infringement. In upholding the validity of this patent we said:

> ". . . . Though we do agree that 798, as an improvement combination, is not entitled to any broad degree of protection over 811, it still seems to us that its hybrid type structure combining the wear-resisting rotating pivot, in part reminiscent of the prior art, with the new shank and stirrup arrangement permitting some of that same advantageous flexibility inherent in the old 811 structure, reveals

sufficient indicia of novelty and invention to justify limited protection . . ." *Jeoffroy Mfg. Co.* v. *Graham*, 219 F. 2d 511, 518, 519.

Thus, we indicated that being a combination patent in a crowded art, the patent would likely not have wide application.

In essence the patent, relating to a ground-working tool designed with springs to make possible the operation of the plow over rocky ground because of ability of the chisel end of the tool to rise over the rocks it encounters, embodies the combination of elements that permit the shanks of the plows upon striking obstructions, to rise and flex within permissible range of movement.

As the combination, not the result, is what is patented, obviously not every arrangement of elements that achieves the same degree of movement and flexibility is an infringing device. Infringement exists only if the patentee's arrangement is copied, or if, by use of equivalents, the same arrangement is used except that for some element of it equivalents are substituted.

As pointed out above, no part of this device is itself patented or subject to patent, since every one of the parts is old, and its use *independently* in the present combination is a long known use. It is only because this particular arrangement of these known elements adopted by Graham achieves the result better than the prior art afforded that Graham was entitled to a patent.

Thus, if appellee has also achieved good results in permitting movement and flexibility in the action of the shank, but has done so not by using either the known elements used by this patentee in its arrangement, nor by using equivalents as a substitute for any or all of the

elements, but by using different means, there is no infringement.

The able and experienced district judge who presided at the trial of this case may now well qualify as an expert in this art. He has presided at some half dozen trials in which the Graham device has been thoroughly explored. He has also been exposed to the explanations of many allegedly infringing devices in these trials. He has found in this case that the Cockshutt device does not infringe the Graham patent.

In its order the Court explained its conclusion in a manner which, while probably not understandable to the person uninitiated in the art, is perfectly plain to those who have worked so long in this field:

> "Plaintiffs have admitted that Defendant's clamp of the type identified as Plaintiffs' Exhibit No. 3 does not infringe said Patent 798. Moreover, neither claim of the patent can be literally read upon Defendant's clamp of the type identified as Plaintiffs' Exhibit No. 4, Defendant's spring clamp, as exemplified by said Exhibit, has a plate between the shank and fixed member of the clamp, but the plate does not have a shank embracing portion thereon, the plate rocks against a portion of the fixed member instead of being pivoted on a pivot pin, and the forward ends of the plate and shank are not held together by a bolt and nut, and in these, as well as other respects, differs sufficiently from the limited equivalency range of the said Patent 798 so as to avoid infringement of the claims in said patent."

While not the experts in the field that Judge Dooley is, we comprehend and approve the analysis made by him.

Appellee here concedes the law to be "that a patent

is entitled to a range of equivalents commensurate with the scope of the invention." However, it contends for the further proposition that a patent for a limited improvement in a crowded art is entitled to an "extremely" limited range of equivalents, citing *Electrical Protection Co.* v. *American Bank Protection Co.*, 8 Cir., 184 F. 916, and this Court's opinion in *Dry Hand Mop Co.* v. *Squeeze Ezy Mop Co.*, 5 Cir., 17 F. 2d 465. Cf. *Stewart-Warner Corp.* v. *Lone Star Gas Co.*, 5 Cir., 195 F. 2d 645; *Butex Gas Co.* v. *Sou Steel Co.*, 5 Cir., 123 F. 2d 954.

As previously pointed out in the quotation from our opinion upholding the validity of this patent, this improvement combination "is not entitled to any broad degree of protection," and the invention "justifies limited protection." We must bear this in mind in considering the range of equivalents.

Bearing in mind also that the patent does not protect against all combinations that permit a smooth and workable operation of the shank when it is forced upward by striking a hard object and the operation of the spring to force it back into position, but only the particular combination used by Graham, we agree that the fact that the shank and the plate attached to it rock against a portion of the fixed member instead of rotating on a pivot pin, and the fact that the plate and shank are not held together rigidly at the forward end by a bolt, constitutes sufficient departure from the claims and structure of the Graham device to support the trial court's finding against infringement.

The judgment is affirmed.

## APPENDIX G

## CONSTITUTION, STATUTES AND RULES INVOLVED.

CONSTITUTION

Article I, § 8, Clause 8

To promote the Progress of Science and useful Arts, by securing for limited Times to Authors and Inventors the exclusive Right to their respective Writings and Discoveries; * * *.

STATUTES

Title 35 U. S. C.

§ 101. Inventions patentable.

Whoever invents or discovers any new and useful process, machine, manufacture or composition of matter, or any new and useful improvement thereof, may obtain a patent therefor, subject to the conditions and requirements of this title.

§ 102. Conditions for patentability; novelty and loss of right to patent.

A person shall be entitled to a patent unless—

(a) the invention was known or used by others in this country, or patented or described in a printed publication in this or a foreign country, before the invention thereof by the applicant for patent, or

(b) the invention was patented or described in a printed publication in this or a foreign country or in public use or on sale in this country, more than one year prior to the date of the application for patent in the United States, or

(c) he has abandoned the invention, or

(d) the invention was first patented or caused to be patented by the applicant or his legal representatives or assigns in a foreign country prior to the date of the application for patent in this country on an application filed more than twelve months before the filing of the application in the United States, or

(e) the invention was described in a patent granted on an application for patent by another filed in the United States before the invention thereof by the applicant for patent, or

(f) he did not himself invent the subject matter sought to be patented, or

(g) before the applicant's invention thereof the invention was made in this country by another who had not abandoned, suppressed, or concealed it. In determining priority of invention there shall be considered not only the respective dates of conception and reduction to practice of the invention, but also the reasonable diligence of one who was first to conceive and last to reduce to practice, from a time prior to conception by the other.

§ 103. Conditions for patentability; non-obvious subject matter.

A patent may not be obtained though the invention is not identically disclosed or described as set forth in section 102 of this title, if the differences between the subject matter sought to be patented and the prior art are such that the subject matter as a whole would have been obvious at the time the invention was made to a person having ordinary skill in the art to which said subject matter pertains. Patentability shall not be negatived by the manner in which the invention was made.

## Appendix G

§ 282. Presumption of validity; defenses.

A patent shall be presumed valid. The burden of establishing invalidity of a patent shall rest on a party establishing it. * * *.

## FEDERAL RULES OF CIVIL PROCEDURE

Rule 52. Findings by the Court.

(a) Effect. In all actions tried upon the facts without a jury or with an advisory jury, the court shall find the facts specially and state separately its conclusion of law thereon and direct the entry of the appropriate judgment; and in granting or refusing interlocutory injunctions the court shall similarly set forth the findings of fact and conclusions of law which constitute the grounds of its action. Requests for findings are not necessary for purposes of review. Findings of fact shall not be set aside unless clearly erroneous, and due regard shall be given to the opportunity of the trial court to judge of the credibility of the witnesses. The findings of a matter, to the extent that the court adopts them, shall be considered as the findings of the court. If an opinion or memorandum of decision is filed, it will be sufficient if the findings of fact and conclusions of law appear therein. Findings of fact and conclusions of law are unnecessary on decisions of motions under Rules 12 or 56 or any other motion except as provided in Rule 41 (b).

## INDEX


Opinions of the Courts Below ..... 1

Jurisdiction ..... 2

Questions Presented for Review ..... 2

Constitutional Provisions, Statutes and Rules Involved .. 2

Statement of the Case ..... 2

Argument ..... 3

The Conflicting Decisions ..... 4

The Test of Invention Applied by the Eighth Circuit Is Not in Conflict with the Statutes ..... 8

The Eighth Circuit's Review of the Findings of Fact Is Not in Conflict with Rule 52 ..... 11

The Patent Does Not Meet the Test of Invention .... 14

Conclusion ..... 18

Appendix "A" ..... A1

Appendix "B" ..... A3

Appendix "C" ..... A5


### Table of Cases Cited


*Altoona Public Theatres* v. *American Tri-Ergon Corporation*, 294 U.S. 477 (1934) ..... 4

*Cornell* v. *Adams Engineering Co.*, 258 F.2d 874 (5th Cir. 1958) ..... 10

*Cuno Engineering Corp.* v. *Automatic Devices Corp.*, 314 U.S. 84 (1941) ..... 5, 8

*Day-Bright Lighting, Inc.*, v. *Sandee Mfg. Co.*, 286 F.2d 596 (7th Cir. 1960) ..... 10

*Elliott & Co.* v. *Youngstown Mfg. Co.*, 181 Fed. 345 (3rd Cir. 1910) ..... 10

*General Motors Corp.* v. *Estate Stove Co.*, 203 F.2d 912 (6th Cir. 1953) ..... 8

*Graham* v. *Cockshutt Farm Equipment*, 256 F.2d 358 (5th Cir. 1958) ..... 3, 4, 6, 7

*Graham* v. *John Deere Company of Kansas City*, 216 F. Supp. 272, Western Dist. of Mo. (March 18, 1963) ..... 3

*Great A & P Tea Co.* v. *Supermarket Equip. Corp.*, 340 U.S. 147 (1950) ..... 5, 6, 8, 11, 16

*Halliburton Oil Well Cementing Co.* v. *Walker*, 329 U.S. 1 (1946) ..... 15, 17

*Interstate Rubber Prod. Corp.* v. *Radiator Specialty Co.*, 214 F.2d 546 (4th Cir. 1954) ..... 8

*Jacuzzi Bros.* v. *Berkley Pump Co.*, 191 F.2d 632 (9th Cir. 1951) ..... 10

*Jeoffroy Mfg.* v. *Graham*, 219 F.2d 511 (5th Cir. 1955) ..... 3, 4, 6, 13

*John Deere Company of Kansas City* v. *Graham*, 333 F.2d 529, 8th Cir. (June 18, 1964) ..... 3

*John Blue Co.* v. *Dempster Mill Mfg. Co.*, 275 F.2d 668 (8th Cir. 1960) ..... 8

*Lincoln Engineering Co.* v. *Stewart-Warner Corp.*, 303 U.S. 545 (1937) ..... 4, 6, 8, 16

*O'Leary* v. *Liggett Drug Co.*, 150 F.2d 656 (6th Cir. 1945) ..... 10

*R. Hoe & Co.* v. *Goss Printing Press Co.*, 30 F.2d 271 (2nd Cir. 1929) ..... 10

*Stanley Works* v. *Rockwell Mfg. Co.*, 203 F.2d 846 (3rd Cir. 1953) ..... 8

*Toledo Pressed Steel Co.* v. *Standard Parts, Inc.*, 307 U.S. 350 (1939) ..... 4

*Wasserman* v. *Burgess & Blacher Co.*, 217 F.2d 402 (1st Cir. 1954) ..... 8

## STATUTES AND RULES

35 U.S.C., § 101 ..... 15
35 U.S.C., § 102 ..... 15
35 U.S.C., § 103 ..... 3, 8
35 U.S.C., § 112 ..... 2, 15, 17
35 U.S.C., § 282 ..... 9, 11
Rev. Stat., § 4888 ..... 17
Rule 52, F.R.C.P. ..... 3, 11, 12

IN THE

# SUPREME COURT OF THE UNITED STATES

OCTOBER TERM, 1964.

## No. 580

WILLIAM T. GRAHAM and GRAHAM PLOW, INC.,
*Petitioners,*

vs.

JOHN DEERE COMPANY OF KANSAS CITY and DEERE & COMPANY,
*Respondents.*

### BRIEF OPPOSING PETITION FOR CERTIORARI

To the Honorable Supreme Court of the United States:

Respondents, JOHN DEERE COMPANY OF KANSAS CITY and DEERE & COMPANY, oppose the petition for writ of certiorari and respectfully present the following matters for the Court's consideration.

### OPINIONS OF THE COURTS BELOW

The Opinions below are correctly reported in and appended to the petition.

## JURISDICTION

Jurisdiction is not questioned.

## QUESTIONS PRESENTED FOR REVIEW

The sole question for review is the validity of United States Patent No. 2,627,798.

## CONSTITUTIONAL PROVISIONS, STATUTES AND RULES INVOLVED

In addition to the statutes cited by Petitioners, it may be appropriate to consider 35 U.S.C., § 112, in connection with Petitioners' arguments at pages 11-13 of the petition and Section 112 is therefore included herein as Appendix "A"

## STATEMENT OF THE CASE

Petitioners' statement of the case is substantially accurate in most respects but it is somewhat slanted and argumentative. We therefore do not accept it and submit the following statement in lieu thereof.

This is a patent suit. The patent in issue is United States Patent No. 2,627,798, entitled "Clamp for Vibrating Shank Plows", issued to W. T. Graham on February 10, 1953. (R. 577) Stripped of all artifice, the patent relates to a spring clamp for attaching the shank of a ground working tool to the frame of a plow, the essential purpose of which is to permit the tool to pivot under spring pressure when rocks or other obstructions are encountered in the soil and return to operating position after the obstruction

is cleared. Sheet 1 of the patent drawings adequately reveals the structure and for convenience of reference same is attached hereto as Appendix "B".

The District Court held the patent valid and infringed, *Graham* v. *John Deere Company of Kansas City*, 216 F. Supp. 272 (W.D. of Mo.) (March 18, 1963). The Court of Appeals for the Eighth Circuit reversed, holding the patent invalid for lack of invention and did not pass on the question of infringement, *John Deere Company of Kansas City* v. *Graham*, 333 F.2d 529 (8th Cir.) (June 18, 1964).

## ARGUMENT

Petitioners advance three reasons for review by this Court, to wit:

1. There is a square conflict between the decision below, in which the Eighth Circuit held the patent invalid for lack of invention, and two former decisions of the Court of Appeals for the Fifth Circuit which held the patent valid, *Jeoffroy Mfg.* v. *Graham*, 219 F.2d 511 (1955), and *Graham* v. *Cockshutt Farm Equipment*, 256 F.2d 358 (1958).

2. The test of invention applied by the Eighth Circuit is contrary to Section 103 of the 1952 Patent Act, 35 U.S.C., § 103, and the test of invention under the Act is an important question of federal law whch has not been, but should be, settled by this Court.

3. The Eighth Circuit's review of the findings of fact of the District Court is in conflict with Rule 52 of the Federal Rules of Civil Procedure, decisions of this Court and decisions of other courts of appeal.

We respectfully submit that grounds 2 and 3 are unfounded and that under the circumstances here existing

the conflict of decision between the Eighth and Fifth Circuits does not call for review by this Court.

**The Conflicting Decisions**

Admittedly, there is a square conflict but we submit that the decision of the Eighth Circuit is so clearly in accord with the law established by this Court that certiorari would serve no useful purpose except to correct the erroneous concept of the Fifth Circuit, and that is not a sufficient reason for granting certiorari.

It is absolutely clear from the findings of the Courts below (and also from the findings in the *Jeoffroy* and *Cockshutt* cases) that the Graham 798 patent *reveals no new element* and is only *a combination of elements old in the art*, all of which elements are found in a broad sense in a single prior art structure, the Glencoe Spring Clamp. [The structure of Glencoe is adequately shown in the Rolf Patent No. 2,739,518 (R. 629) and for convenience of reference we attach the sheet of drawings therefrom as Appendix "C".] For such combinations of old elements, this Court has specifically established both negative and positive tests or standards of invention.

The negative standard was crystallized in *Lincoln Engineering Co.* v. *Stewart-Warner Corp.*, 303 U.S. 545, 549 (1937), as follows:

> "The mere aggregation of a number of old parts or elements which, in the aggregation, perform or produce no new or different function or operation than that theretofore performed or produced by them is not patentable invention."

To the same effect are *Altoona Public Theatres* v. *American Tri-Ergon Corporation*, 294 U.S. 477, 486 (1934); *Toledo Pressed Steel Co.* v. *Standard Parts, Inc.*, 307 U.S. 350, 355

(1939); and *Cuno Engineering Corp.* v. *Automatic Devices Corp.*, 314 U.S. 84, 88 (1941).

The positive test was stated in *Great A & P Tea Co.* v. *Supermarket Equip. Corp.*, 340 U.S. 147, 152 (1950), as follows:

> "The conjunction or concert of known elements must contribute something; only when the whole in some way exceeds the sum of its parts is the accumulation of old devices patentable. Elements may, of course, especially in chemistry or electronics, take on some new quality or function from being brought into concert, but this is not a usual result of uniting elements old in mechanics. This case is wanting in any unusual or surprising consequences from the unification of the elements here concerned, and there is nothing to indicate that the lower courts scrutinized the claims in the light of this rather severe test."

Paraphrased, the positive test is that in order to constitute invention the combination of old elements must produce some new, unexpected or surprising result or consequence. This rule is the law of the land; it has been expressly followed in literally hundreds of cases; it has been consistently followed by the Eighth Circuit and it was meticulously tracked by that Court in its decision below.

It is crystal clear from the findings of the District Court that it did not find any new, unexpected or surprising result or consequence in the Graham 798 combination. It did find "an improved functional result", the improvements being: (1) the arrangement of the shank below the plate portion of the pivoted member which permits the forward portion of the shank to flex downwardly away from the plate portion of the fixed member, and (2) reduction of wear and tear to some parts of the clamp. There are *no other findings of achievement* and upon their face those findings do not satisfy either the negative test

as stated in *Lincoln Engineering* v. *Stewart-Warner* or the positive test laid down in *A & P*. The Eighth Circuit therefore held that the District Court had not applied the correct and required test or standard and that the patent was invalid for lack of invention. In so holding, the Eighth Circuit followed precisely the law as laid down by this Court.

By comparison, we respectfully submit that the Fifth Circuit, in holding the patent valid in the *Jeoffroy* and *Cockshutt* cases, paid lip service to the rules of this Court but did not apply them.

In the *Jeoffroy* case the District Court, even without the benefit of the Glencoe prior art clamp, found the Graham 798 patent invalid for lack of invention, saying (R. 915):

> "* * * This patent 798 does mark an improvement bettering efficiency and economy over patent 811, but that is not enough to constitute invention. The said patent 811 was the spring board and from that vantage background the next step from that structure to the structure of patent 798, was well within the capacity of a skilled mechanic."

In reversing the District Court the Fifth Circuit said, 219 F.2d, at page 518:

> "* * * Though we do agree that 798, as an improvement combination, is not entitled to any broad degree of protection over 811, it still seems to us that its hybrid type structure combining the wear-resisting rotating pivot, in part reminiscent of the prior art, with the new shank and stirrup arrangement permitting some of that same advantageous flexibility inherent in the old 811 structure, reveals sufficient indicia of novelty and invention to justify limited protection.

> * * * Other factors strongly influencing and, we think, reinforcing our conclusion as to the validity of 798 are: * * * (3) the further rule, long recognized by this court, that an improvement combination is patentable even though its constituent elements are singly revealed by the prior art, where, as here, it produces an old result in a cheaper and otherwise more advantageous way; * * *."

There was no finding of any new, unexpected or surprising result or consequence. On the contrary, the only finding of achievement was "an old result in a cheaper and otherwise more advantageous way". That was the real basis for the finding of invention and the Fifth Circuit expressly so stated in *Graham* v. *Cockshutt*, 256 F.2d, at page 359, as follows:

> "We conclude, however, after careful consideration, that our decision previously made as to the validity of this patent should stand. * * *
>
> "As pointed out above, no part of this device is itself patented or subject to patent, since every one of the parts is old, and its use independently in the present combination is a long known use. *It is only because this particular arrangement of these known elements adopted by Graham achieves the result better than the prior art afforded that Graham was entitled to a patent.*" (Emphasis added.)

The conflict between the Eighth Circuit and the Fifth Circuit is clear, but it is equally clear that the Eighth Circuit has followed and applied the standards announced by this Court while the Fifth Circuit has not and no valid purpose would be served for this Court to grant a writ and restate the law which it has so clearly established heretofore.

**The Test of Invention Applied by the Eighth Circuit Is Not in Conflict with the Statutes**

Petitioners argue that in requiring a new or unexpected result or consequence as the test of invention, the Eighth Circuit was relying upon the decisions of this Court in the *Cuno* and *A & P* cases, that those decisions were before passage of the 1952 Patent Act, that Section 103 of the Act does not contain the new or unexpected result or consequence test, and that such a test is in conflict with Section 103. Stripped to its vitals, the argument is, in effect, that Section 103 established a new test and nullified the *A & P* standard. This is not a new argument. It was made almost immediately after the adoption of the 1952 Act and the courts have repeatedly held that Section 103 did not establish any new test but merely codified a hundred years of decisional patent law, including *A & P*. *Stanley Works* v. *Rockwell Mfg. Co.*, 203 F.2d 846, 849 (3rd Cir. 1953); *General Motors Corp.* v. *Estate Stove Co.*, 203 F.2d 912, 918 (6th Cir. 1953); *Interstate Rubber Prod. Corp.* v. *Radiator Specialty Co.*, 214 F.2d 546, 548 (4th Cir. 1954); *Wasserman* v. *Burgess & Blacher Co.*, 217 F.2d 402, 404 (1st Cir. 1954); *John Blue Co.* v. *Dempster Mill Mfg. Co.*, 275 F.2d 668, 671 (8th Cir. 1960).

At the time of *Cuno, Lincoln Engineering* and *A & P* the settled law was that a structure, although new and useful, did not involve invention if it would have been obvious to one skilled in the art. Within that broad rule this Court said combinations of old mechanical elements are obvious and non-inventive unless they produce some new, unexpected or surprising result or consequence. The broad test was codified in Section 103 and there is neither legislative history nor logic to support the argument that

the more specific test for combinations of old mechanical elements was thereby rejected.

Petitioners further urge that the decision of the Eighth Circuit is in conflict with 35 U.S.C., § 282, because the Court stated in its opinion that "the presumption of validity is weakened if applicable prior art is not considered by the Patent Office." Petitioners contend that the presumption is weakened only if the prior art not considered by the Patent Office is more pertinent than the art which was considered. This argument is ill founded for three reasons:

First, it disregards the full context of the Court's statement, and we quote from 333 F.2d, at page 530:

> "Appellees urge and rely upon the uncontroverted rule, established by statute and consistently recognized by the courts, that a patent shall be presumed valid and that the burden of establishing invalidity of a patent shall rest on the party asserting it. * * * It is equally clear, however, that the presumption of validity is a rebuttable one, that when substantial evidence attacking the validity of a patent is introduced, the question whether the patent constitutes an invention is for the court, * * * and that the presumption of validity is weakened if applicable prior art is not considered by the Patent Office."

The Court held that the presumption of validity was overcome by the whole proof in the record and not by any one factor alone.

Second, the rule that the presumption of validity is weakened by the failure of the Patent Office to consider pertinent art is not limited to a failure to consider more pertinent art. The presumption of validity is based in part upon the theory that the Patent Office routinely considers the pertinent prior art before a patent is is-

sued. Thus, when it appears that pertinent art was not considered there is no reason for indulging the presumption and it is of little consequence. The Courts so hold. In *Jacuzzi Bros.* v. *Berkley Pump Co.*, 191 F.2d 632, 634 (9th Cir. 1951), the Court said:

> "* * * Even one prior art reference, which has not been considered by the Patent Office, may overthrow the presumption of validity, and, when the most pertinent art has not been brought to the attention of the administrative body, the presumption is largely dissipated."

To the same effect are *Day-Bright Lighting, Inc.*, v. *Sandee Mfg. Co.*, 286 F.2d 596, 597 (7th Cir. 1960); *O'Leary* v. *Liggett Drug Co.*, 150 F.2d 656, 664 (6th Cir. 1945); *Cornell* v. *Adams Engineering Co.*, 258 F.2d 874, 875 (5th Cir. 1958); *Elliott & Co.* v. *Youngstown Mfg. Co.*, 181 Fed. 345, 349 (3rd Cir. 1910); *R. Hoe & Co.* v. *Goss Printing Press Co.*, 30 F.2d 271, 274 (2nd Cir. 1929).

Third, even if the presumption were weakened only by a failure to consider more pertinent art, it is clear beyond any question that the Glencoe Spring Clamp, not considered by the Patent Office, is more pertinent than any of the art which was considered. The Trial Court expressly found (Finding XII) that "in a broad sense all of the elements are found in one single reference, the Glencoe clamp," and even a cursory examination of Glencoe (Appendix "C") reveals that every mechanical element of Graham's 798 clamp is present in Glencoe and that the only essential difference is that Graham is arranged with the shank *below* the plate portion of the pivoted member, whereas Glencoe is arranged with the shank *above* the plate portion of the pivoted member.

Section 282, declaring the presumption of validity, codified a long-standing judicial rule and the Eighth Circuit merely held, as courts have long held, that the presumption of validity was overcome by the proof. There is no conflict with the statute.

**The Eighth Circuit's Review of the Findings of Fact Is Not in Conflict with Rule 52**

Apparently Petitioners' charge of error in fact review is only a "make weight" since they do not even devote a section of their argument thereto. Under their heading "The Patent in Suit Meets the Test of Invention" they do briefly argue, on page 13, that the Court disregarded Rule 52. The theme of their argument is not clear but apparently it is two-fold: first, that the Court disregarded the District Court's finding "that none of the prior art structures were *like* the patent structure"; and, second, that the Court disregarded the Trial Court's finding that "the flexing provided by the patent structure was significant".

On the first phase of the argument we fail to see any finding by the District Court "that none of the prior art structures were like the patent structure". The District Court did not phrase any finding in that language. It did say, in Finding XII, that "the particular arrangement of the elements disclosed by 798 is not present in any single reference or as a whole" and the Eighth Circuit gave full credence to that finding. It merely held that the differences in arrangement did not produce any new or unexpected result or consequence and the differences were thus insufficient to constitute invention. This is review strictly in accordance with the rule announced by this Court in the *A & P* case. The Court of Appeal applied the proper legal standard to the facts as found by the Trial Court and they fell short of the mark.

The second phase of Petitioners' fragmentary argument requires somewhat more analysis. In its Findings of Fact XIII and XIV the Trial Court found that the Graham 798 arrangement of the plate portion of the pivoted member above the shank permits the forward portion of the shank to flex downwardly away from the plate member in a manner different from the prior art and Finding XIV contains the following statement:

> "The Graham 798 patent is an improvement patent and, while the individual mechanical elements may be found in the prior art, taken as a whole the Graham 798 structure is sufficiently different in the operative relationship of the shank and pivoted member with a *slight but significant difference in the flexing of the forward portion of the shank* that is not found in the prior art, so that the Graham 798 patent involves invention." (Emphasis added.)

Petitioners apparently argue that the Eighth Circuit disregarded that finding and ruled that any such flexing is insignificant.

Again, this is an argument that misconstrues the Court's opinion. At page 534 of the Opinion, the Court assumed that the slight difference in flexing of the forward portion of the shank, as found by the Trial Court, does exist and that the inversion of the parts which produces that difference of flex does perhaps result in a more efficient structure, but it pointed out that the slight difference in relative direction of flex of the shank away from the plate member rather than against the plate member would have been *an obvious result of the inversion* to a person having ordinary skill in the art. Thus, the Trial Court's finding of invention was without adequate evidentiary support in the record and was clearly erroneous. This is review precisely in accordance with Rule 52.

Furthermore, even if the Eighth Circuit had ruled that the slight difference in shank flex was of no significance whatsoever, even as to improve efficiency, the ruling would be correct because the only evidence in the record is that such flex is unimportant. Petitioners' own expert, Mr. Fenton, testified as follows (R. 548):

> "Q. Do you regard the small degree of flex in the forward end of the shank that lies between the pivot point and the point of spring attachment to be of any significance or any importance to the functioning of a device such as 798?
>
> "A. Unless you are approaching the elastic limit, I think this flexing will reduce the maximum stress at the point of pivot there, where the maximum stress does occur. I think it will reduce that. I don't know how much.
>
> "Q. Do you think it is a substantial factor, a factor of importance in the functioning of this structure?
>
> "A. Not a great factor, no."

Similar testimony was given by him in the *Jeoffroy* case and pointed out in this case (R. 548-549) as follows:

> "Q. * * * Do you consider this portion, this what you call the resilient action of the shank, Mr. Fenton, in the forward 8 or 9 inches of that shank that's up inside the mounting or bracket, important to the function of the device?
>
> "A. Not too important. It is present, but not too important.
>
> "Q. It would function just as well whether that were there or not, wouldn't it?
>
> "A. In this particular case and this device?
>
> "Q. Yes, sir.
>
> "A. I think it would essentially, yes."

Respondents' expert, Mr. Fishleigh, testified that in spring steel shanks of the type under consideration there is pro-

vision in the long curved rearwardly extending portion of the shank for large ranges of flexion and that in actual operation there is a great deal of flex in that part of the shank, but that in the forward portion of the shank, within the clamp, the range of flexion is extremely small, only a few thousandths of an inch at most, and that such flexion is of no consequence to the operation. (R. 364, 479.) Any finding that the asserted shank flex was significant is thus unsupported by evidence and is clearly erroneous. Rule 52 authorizes the setting aside of such findings.

Petitioners further argue that Respondents made their clamps so that they would have the alleged flex and that such flex had to be significant. Otherwise, they say, Respondents would have made their clamps with the shank above the plate as in the prior art. No reference is made to the record and this argument is whole cloth imagination of counsel.

Petitioners' argument that the Eighth Circuit violated Rule 52 borders on frivolity and is wholly without merit.

**The Patent Does Not Meet the Test of Invention**

The petition contains a subdivision entitled "The Patent in Suit Meets the Test of Invention". The arguments thereunder have little or nothing to do with the assigned reasons for granting certiorari and any response may be superfluous but we do not feel that the arguments should go unchallenged.

Petitioners first inquire whether the 798 clamp was *new* and *useful*. We assume, for purposes of argument, that it was useful, although Graham has never manufactured or sold it, that it was new or novel in the sense that the precise form and arrangement of the parts were not found in the prior art and that the requirements of

35 U.S.C., § 101 and § 102, were met. That leaves open, however, the third important requirement—INVENTION—and Petitioners wholly fail to discuss that requirement.

We respectfully submit that the Graham 798 clamp involves nothing more than inversion of the Glencoe shank and pivoted member and modifications of form of some parts for adaptation to the Graham plow. This is elementary mechanics with obvious results and no matter how the test of invention is phrased, 798 falls short.

Petitioners chastise the Court for pointing out that the patent does not mention "the shank flex which became the basic reason for sustaining the validity of the patent in the Trial Court" and for holding that "the failure of the specification and claims to spell out function and result was a fatal defect" which rendered the patent invalid. They offer as excuses for the failure of the patent to disclose its crux of invention—the slight flex of the shank away from the plate of the pivoted member—the proposition that the statute (They do not say what statute, but we may assume that they mean 35 U.S.C., § 112.) only requires that the specifications and claims disclose the structure and that any claim of function would have been improper under the authority of *Halliburton Oil Well Cementing Co.* v. *Walker,* 329 U.S. 1 (1946). This argument is without merit from beginning to end.

In the first place, the Eighth Circuit did not *hold* that the patent was invalid because it failed to disclose or claim the shank flex function. The Court merely pointed out the significant fact that if such shank flex was so important, if it was the crux of invention, it was strange that no mention was made thereof in the patent. Since shank flex was not of sufficient consequence to mention

in the patent or the file history it would hardly seem sufficient to support invention. A precise parallel is *Lincoln Engineering Co.* v. *Stewart-Warner Corp.*, 303 U.S. 545, 550 (1937), where this Court said:

> "* * * the respondent * * * urges that in the combination of the Butler patent, the headed nipple performs a new and different function from that which it had heretofore performed, in other combinations, in that, when the coupler is drawn from the nipple, at the end of the greasing operation, the rounded head of the nipple 'cocks' the jaws of the coupler for the next operation. *The suggestion seems to be an afterthought. No such function of the nipple is hinted at in the specifications of the patent. If this were so vital an element of the functioning of the apparatus it is strange that all mention of it was omitted.*" (Emphasis added.)

See, also, the *A & P* case where this Court said, at page 149:

> "Since the courts below perceived invention only in an extension of the counter, we must first determine whether they were right in so doing. We think not. In the first place, the extension is not mentioned in the claims, except perhaps, by a construction too strained to be consistent with the clarity required of claims which define the boundaries of a patent monopoly."

The plain truth is that in the courts below Petitioners urged "flex of the forward portion of the shank downwardly away from the plate of the pivoted member" as the heart and soul of the inventive concept of this patent yet that vital function or achievement was never mentioned or even hinted at in the specifications and claims or in any of the Patent Office proceedings. (See the file history at R. 659, *et seq.*) It was and is a pure afterthought

brought forward by counsel in a last-ditch effort to salvage this patent in the courthouse.

In the second place, counsel's wail that the patent disclosed and claimed structure, as required by the statute, and that function could not be claimed, reflects shallow analysis that may be quickly dispelled.

In the *Halliburton* case, this Court held claims invalid under the statute then in force, Rev. Stat. § 4888 (35 U.S. C.A., Appendix II, page 818), because they wholly failed to define structure and were functional only in the crucial area of alleged invention. Such a wholly functional claim would perhaps be insufficient under the present disclosure requirements of 35 U.S.C., § 112, but the second and third paragraphs thereof now provide as follows:

> "The specification shall conclude with one or more claims particularly pointing out and distinctly claiming the subject matter which the applicant regards as his invention.
>
> "An element in a claim for a combination may be expressed as a means or step for performing a specified function without the recital of structure, material, or acts in support thereof, and such claim shall be construed to cover the corresponding structure, material, or acts described in the specification and equivalents thereof."

Under the provisions of the second paragraph it may well be that Graham was required to assert the shank flex in his claims, if that was in fact the crux of his alleged invention, but we need not cross that bridge since it is absolutely clear under the express provisions of the third paragraph that he was entitled to define the shank flex function in conjunction with the structural arrangement of the combination. Furthermore, there is absolutely nothing in the statutes which would have prevented him from

disclosing the alleged vital function in his specifications whether it was included in the claims or not.

The simple truth is that the Eighth Circuit rejected this patent for lack of invention and not for deficiency of disclosure and Petitioners' argument that the patent complied with the statutory requirements of disclosure has nothing to do with the reasons advanced for granting certiorari.

We respectfully submit that the Eighth Circuit held this patent invalid for lack of invention upon a record which permits no other conclusion. In doing so, it gave full effect to the applicable statutes and followed precisely the law laid down by this Court.

## CONCLUSION

In conclusion, we respectfully submit that the only ground for certiorari which deserves any consideration is the conflict of decision between the Fifth and Eighth Circuits and on that point the decision of the Eighth Circuit is so clearly correct the petition should be denied.

Respectfully submitted,

W. W. GIBSON and
S. TOM MORRIS,
630 Amarillo Building,
Amarillo, Texas,

and

THOMAS E. SCOFIELD,
1325 Rialto Building,
Kansas City 6, Missouri,
*Attorneys for Respondents.*

## APPENDIX "A"

35 U.S.C., §112

"§112. Specification

"The specification shall contain a written description of the invention, and of the manner and process of making and using it, in such full, clear, concise, and exact terms as to enable any person skilled in the art to which it pertains, or with which it is most nearly connected, to make and use the same, and shall set forth the best mode contemplated by the inventor of carrying out his invention.

"The specification shall conclude with one or more claims particularly pointing out and distinctly claiming the subject matter which the applicant regards as his invention.

"An element in a claim for a combination may be expressed as a means or step for performing a specified function without the recital of structure, material, or acts in support thereof, and such claim shall be construed to cover the corresponding structure, material or acts described in the specification and equivalents thereof. July 19, 1952, c. 950, §1, 66 Stat. 798."

Feb. 10, 1953 W. T. GRAHAM 2,627,798

CLAMP FOR VIBRATING SHANK PLOWS

Filed Aug. 27. 1951 4 Sheets-Sheet 1

Fig. 1.

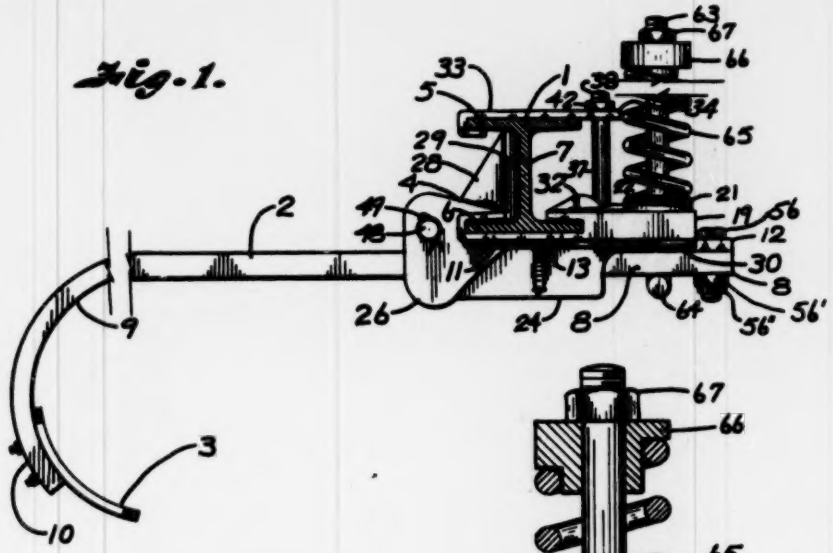


Fig. 2.

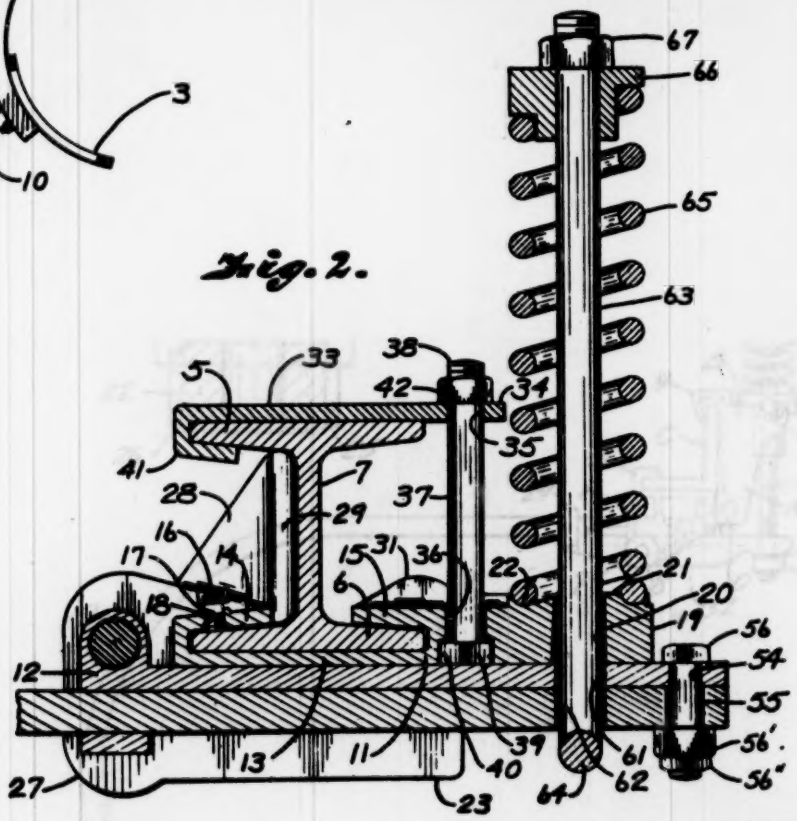


INVENTOR.
William T. Graham.
BY
Fishburn & Mullendore
ATTORNEYS.

March 27, 1956 E. A. ROLF 2,739,518

SHANK HOLDER

Filed April 19, 1952

FIG. 2

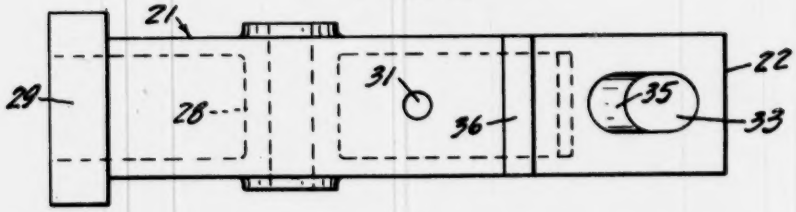


FIG. 3

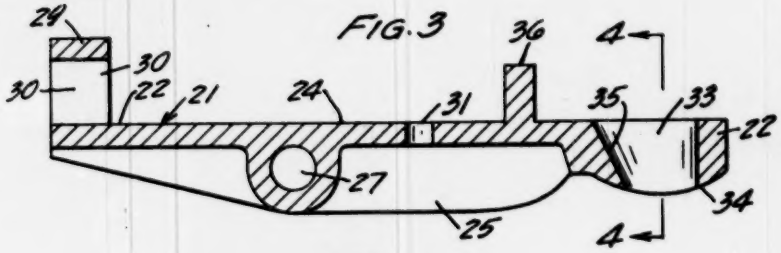


FIG. 4




FIG. 1

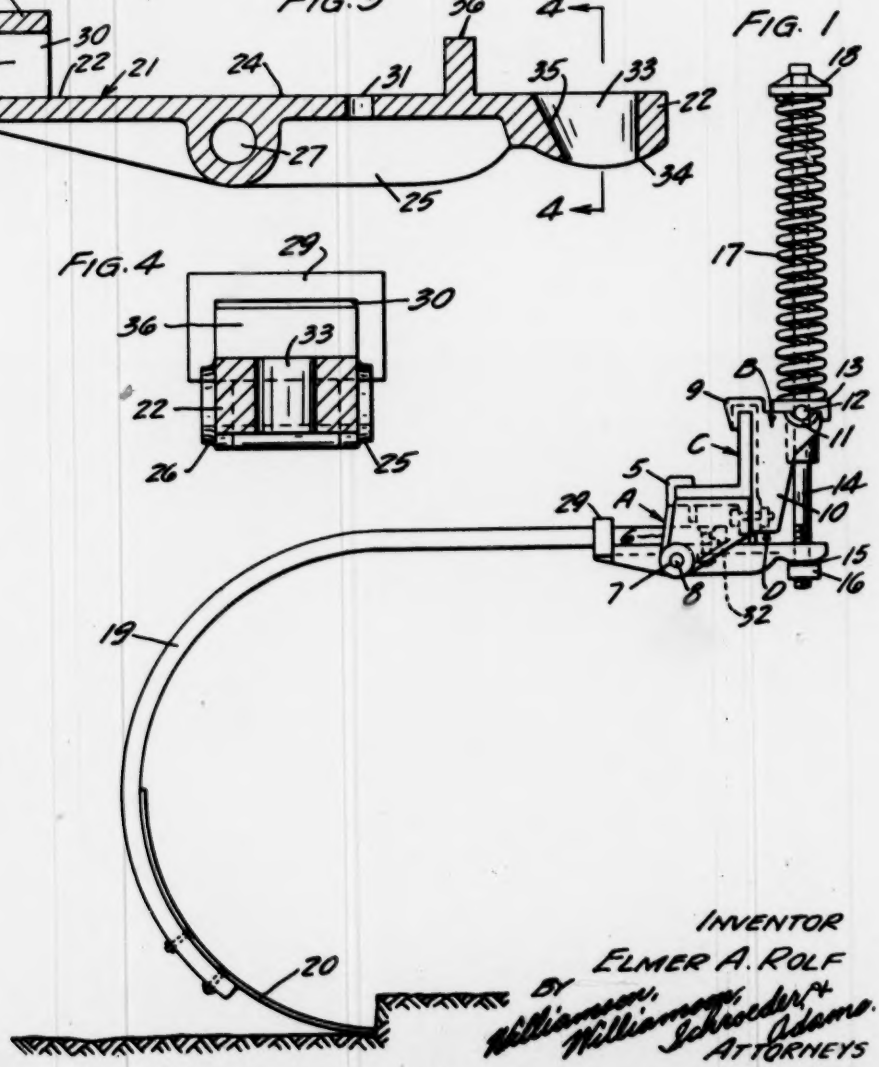


INVENTOR
ELMER A. ROLF
BY Williamson, Williamson, Schroeder & Adams.
ATTORNEYS

ILE COPY

Office-Supreme Court, U
FILED
FEB 26 1965
JOHN F. DAVIS, CLER

IN THE

# Supreme Court of the United States

October Term, 1964

No. [redacted] 11

WILLIAM T. GRAHAM, and GRAHAM PLOW, INC.,
*Petitioners,*

v.

JOHN DEERE COMPANY OF KANSAS CITY, and
DEERE & COMPANY, *Respondents*

## Amicus Curiae Brief Of The Patent, Trade-Mark And Copyright Section Of The State Bar Of Texas (With The Consent Of The Board Of Directors Of The State Bar Of Texas)

J. VINCENT MARTIN
ALFRED H. EVANS
First City National Bank Bldg.
Houston, Texas 77002

*Counsel for the Patent, Trade-mark and Copyright Section of the State Bar of Texas*

*Of Counsel:*
RUSSELL E. SCHLORFF
Houston, Texas

*Alpha Law Brief Co., M & M Bldg., Houston, Texas 77002*

## SUBJECT INDEX


| | Page |
|---|---|
| I. Preliminary Statement | 1 |
| II. Argument | 2 |
| Summary of Argument | 2 |
| Point A - The legislative history of the second sentence of §103 clearly reveals the legislative intent to eliminate the "flash of creative genius" test of the *Cuno* case | 3 |
| Point B - Point A above is supported by the opinions of many Courts | 5 |
| Point C - The elimination of the "flash of creative genius" test by §103 is in the public interest | 9 |
| III. Conclusion | 9 |
| Certificate of Service | 10 |


## INDEX OF AUTHORITIES


| CASES | Page |
|---|---|
| Cuno Engineering Corp. v. Automatic Devices Corp., 314 U.S. 84, 62 S.Ct. 37, 86 L.Ed. 58 (1941) | 2 |
| E. J. Brooks Co. v. Stoffel Seals Corp., 266 F.2d 841, 121 USPQ 333 (2 Cir. 1959), cert.den. 361 U.S. 883 | 5 |
| L-O-F Glass Fibers Co. v. Watson, Comr.Pats., 228 F.2d 40, 107 USPQ 197 (Ct. App. D.C. 1955) | 9 |
| Lyon v. Bausch & Lomb Optical Co., 224 F.2d 530, 106 USPQ 1 (2 Cir. 1955), cert.den. 350 U.S. 911 | 5, 9 |

| CASES | Page |
|---|---|
| Marvel Specialty Co., Inc. v. Bell Hosiery Mills, Inc., 330 F.2d 164, 141 USPQ 269 (4 Cir. 1964), cert.den. 13 L.Ed.2d 175 (No. 396, Nov. 9, 1964) | 8 |
| Plax Corp. v. Precision Extruders, Inc., 239 F.2d 792, 112 USPQ 150 (3 Cir. 1957) | 7 |
| Reiner v. I. Leon Co., Inc., 285 F.2d 501, 128 USPQ 25 (2 Cir. 1960), cert.den. 366 U.S. 929 | 6 |
| R. M. Palmer Co. v. Luden's Inc., 236 F.2d 496, 111 USPQ 1 (3 Cir. 1956) | 7 |
| **FEDERAL CONSTITUTION AND STATUTES** | |
| United States Constitution, art. I, sec. 8, cl. 8 | 9 |
| Patent Act of July 19, 1952, c. 950, §1, 66 Stat. 798, 35 U.S.C. §103 (1958) | 2, 3, 9 |
| **MISCELLANEOUS** | |
| 2 U. S. Code Cong. & Ad. News, 82nd Congress, Second Session, 1952, at p. 2513 | 4 |

IN THE

# Supreme Court of the United States

October Term, 1964

---

No. 580

---

WILLIAM T. GRAHAM, and GRAHAM PLOW, INC.,
*Petitioners,*
v.
JOHN DEERE COMPANY OF KANSAS CITY, and
DEERE & COMPANY, *Respondents*

---

**Amicus Curiae Brief Of The
Patent, Trade-Mark And Copyright Section
Of The State Bar Of Texas
(With The Consent Of The Board Of Directors
Of The State Bar Of Texas)**

---

## I.

## PRELIMINARY STATEMENT

The written consent of all parties to this case to the filing of this brief has been obtained and filed with the Clerk.

In this case the District Court found the patent valid and infringed. The Eighth Circuit Court of Appeals reversed, holding that since the District Court failed to apply the proper legal test of invention, its finding of patentability was induced by an erroneous view of the law. The decision of the Eighth Circuit Court of Appeals was based upon the test announced by this Court in *Cuno Engineering Corp. v. Automatic Devices Corp.*, 314 U.S. 84, 62 S.Ct. 37, 86 L.Ed. 58 (1941).

It is the purpose of this amicus curiae brief to present for this Court's consideration information with respect to the legislative history of §103 of the Patent Codification Act (Title 35, U.S.C.) and subsequent opinions of the courts which, we believe, establish that the "flash of creative genius" test of the *Cuno* case of 1941 was eliminated by the second sentence of §103 of the Patent Codification Act of 1952. 66 Stat. 798, 35 U.S.C. §103 (1958).

## II.

## ARGUMENT

### Summary of Argument

The legislative intent of the Congress to eliminate the "flash of creative genius" test announced in the *Cuno* case is clearly established by the second sentence of §103, the legislative history thereof and subsequent opinions of the courts.

## Point A

**The legislative history of the second sentence of §103 clearly reveals the legislative intent to eliminate the "flash of creative genius" test of the Cuno case.**

Obviously, the legislative intent was to effect a substantive change in the law by excluding the test in the second sentence.

Section 103 is as follows:

> "A patent may not be obtained though the invention is not identically disclosed or described as set forth in Section 102 of this title, if the differences between the subject matter sought to be patented and the prior art are such that the subject matter as a whole would have been obvious at the time the invention was made to a person having ordinary skill in the art to which said subject matter pertains. *Patentability shall not be negatived by the manner in which the invention was made.*" (Emphasis ours.)

The House and Senate Reports, including the Reviser's Note forming a part thereof, are the same. *In the Reviser's Note the first and second sentences of §103 are distinguished as follows:* (35 U.S.C. §103 [1958]).

> "There is no provision corresponding to the first sentence explicitly stated in the present statutes, but the refusal of patents by the Patent Office, and the holding of patents invalid by the Courts, on the ground of lack of invention or lack of patentable novelty has been followed since at least as early as 1850. This paragraph is added with the view that an explicit statement in the statute may have some stabilizing effect,

and also to serve as a basis for the addition at a later time of some criteria which may be worked out."

*"The second sentence states that patentability as to this requirement is not to be negatived by the manner in which the invention was made, that is, it is immaterial whether it resulted from long toil and experimentation or from a flash of genius."* (Emphasis ours.)

In the commentary by Mr. Charles J. Zinn, the House Committee's law revision counsel, the following statement is made: (2 U.S. Code Cong. & Ad. News, 82nd Congress, Second Session, 1952, at p. 2513).

"Section 103 is a restatement of the rule invalidating patents for lack of invention or lack of patentable novelty which has long been recognized by the Courts and other authorities but has not before been spelled out in the statute.

*"The second sentence of this section providing that patentability shall not be negatived by the manner in which the invention was made eliminates the 'flash of genius' concept that has been considered as an essential element of patentability since the Cuno case. In that case (Cuno Engineering Corp. v. Automatic Devices Corp.,* 314 U.S. 84, 62 S.Ct. 37, 86 L.Ed. 58) *the Supreme Court held that 'the new device, however useful it may be, must reveal the flash of creative genius, not merely the skill of the calling'. The patentability of an invention resulting from arduous experimentation will not be negatived solely because it does not meet that concept."* (Emphasis ours.)

It thus appears that §103 should be construed to mean that if the differences between the patented subject matter and the prior art are such that the subject matter would not have been obvious to one skilled in the art at the time

the alleged invention was made, the patent is valid, and it is not necessary that the patented invention be the result of a "flash of creative genius."

**Point B**

**Point A above is supported by the opinions of many Courts.**

In *Lyon v. Bausch & Lomb Optical Co.*, 224 F.2d 530, 106 U.S.P.Q. 1 (2 Cir. 1955), cert. den. 350 U.S. 911, Judge Learned Hand said (page 535 of 224 F.2d):

> "The Courts of Appeal have very generally found in the recent opinions of the Supreme Court a disposition to insist upon a stricter test of invention than it used to apply * * *"

and, with reference to the *Cuno* case (page 536 of 224 F.2d):

> "* * * which in expression probably was the furtherest departure * * *."

In *E. J. Brooks Co. v. Stoffel Seals Corp.*, 266 F.2d 841, 121 U.S.P.Q. 333 (2 Cir. 1959), cert. den. 361 U.S. 883, Judge Lumbard in his dissenting opinion said (page 846 of 266 F.2d):

> "The establishment of a more liberal standard than the 'flash of creative genius' doctrine enunciated in the Cuno case was apparently one of the principal reasons why Congress passed the 1952 Patent Act, 35 U.S.C. §101 ff., especially §103. See e.g. Reviser's Note to §103, 2d Para.; Note, 44 Georgetown L.J. 100 (1955); Harris, Some Aspects of Legislative Intent of the Patent Act of 1952, 23 Geo. Wash. L.Rev. 658, 676 ff.

(1955). We so held in Lyon v. Bausch & Lomb Optical Co., supra, where the Cuno decision was cited as 'the furthest departure' (224 F.2d 536) from the test of Hotchkiss v. Greenwood, 1851, 11 How. 248, 267, 13 L.Ed. 683, to which the 1952 enactment was held to have returned devoid of intervening glosses."
* * *

"Thus we have recognized that the 1952 Patent Act has overruled Picard v. United Aircraft Corp., 2 Cir., 1942, 128 F.2d 632, and that Congress has made it clear that what was said in Cuno Engineering Corp. v. Automatic Devices Corp., 1941, 314 U.S. 84, 91, 62 S.Ct. 37, 87 L.Ed. 58, about a 'flash of creative genius' was not a proper test of invention."

And (pages 846-47 of 266 F.2d):

"In my view the citation of the Cuno case in Judge Clark's footnotes is apt to be misleading as the implications of its 'flash of creative genius' phrase, whether dictum or not, has been repudiated by the paramount authority of the Congress. Other circuits which have expressly adopted the analysis of Lyon v. Bausch & Lomb Optical Co., supra, are the District of Columbia, L-O-F Glass Fibers Co. v. Watson, 1955, 97 U.S. App. D.C. 69, 228 F.2d 40, 47 and note 14; Third Circuit, R. M. Palmer v. Luden's, Inc., 1956, 236 F.2d 496, 500; Fourth Circuit, Brown v. Brock, 1957, 240 F.2d 723. Only the First Circuit appears to have considered and rejected it. See, e.g., Hawley Products Co. v. United States Trunk, 1958, 259 F.2d 69."

In *Reiner v. I. Leon Co., Inc.*, 285 F.2d 501, 128 U.S.P.Q. 25 (2 Cir. 1960), cert. den. 366 U.S. 929, Judge Hand said (page 503 of 285 F.2d):

"There can be no doubt that the Act of 1952 meant to change the slow but steady drift of judicial de-

> cision that had been hostile to patents which made it possible for Mr. Justice Jackson in dissent to speak of the 'strong passion in this Court for striking them' (patents) 'down so that the only patent that is valid is one which this Court has not been able to get its hands on.' Jungerson v. Ostby & Barton Co., 335 U.S. 560, 572, 69 S.Ct. 269, 274, 93 L.Ed. 235. That was in 1945, while the test laid down in Hotchkiss v. Greenwood, 11 How. 248, 266, 13 L.Ed. 683, still had a nominal authority, of which little remained in actual application. We still cannot escape the conclusion—as we could not when Lyon v. Bausch & Lomb, supra, was decided in 1955—that Congress deliberately meant to restore the old definition, and to raise it from a judicial gloss to a statutory command."

In *R. M. Palmer Co. v. Luden's Inc.*, 236 F.2d 496, 111 U.S.P.Q. 1, (3 Cir. 1956), the Court *sitting en banc* said in an opinion by Judge Kalodner (page 499 of 236 F.2d):

> "The provisions of Section 103, 35 U.S.C., 1952 Ed., as set forth in footnote 3, are new. The purpose of the provisions as stated by the Reviser is to achieve a stabilizing effect, and to render immaterial whether the invention resulted from 'flash of genius'."

and (page 500 of 236 F.2d):

> "There is no longer any doubt that the 'flash of genius' has been laid to rest."

In *Plax Corp. v. Precision Extruders, Inc.*, 239 F.2d 792, 112 U.S.P.Q. 150 (3 Cir. 1957), Judge Biggs said at page 794:

"We enunciated our interpretation of section 103 in R. M. Palmer Co. v. Luden's, Inc., 3 Cir. 1956, 236 F.2d 496, and of recent date in Newburgh Moire Co., Inc. v. Superior Moire Co., Inc., 3 Cir., 1956, 237 F.2d 283. We need not repeat in detail here what was said there. It is not necessary that an invention result from a 'flash of genius.' We think that Ferngren's work involved 'more ingenuity * * * than the work of a mechanic skilled in the art'."

In *Marvel Specialty Co., Inc. v. Bell Hosiery Mills, Inc.*, 330 F.2d 164, 141 U.S.P.Q. 269, (4 Cir. 1964), cert. den. 13 L.Ed.2d 175 (No. 396, Nov. 9, 1964), Judge Boreman said (page 169 of 330 F.2d):

"The extent to which the enactment of section 103 of the statute altered prior law is not altogether clear. See Berry Brothers Corporation v. Sigman, 317 F.2d 700, 704, (4 Cir. 1963); Triumph Hosiery Mills, Inc. v. Alamance Industries, Inc., 299 F.2d 793, 800, (4 Cir.) cert. denied, 370 U.S. 924, 82 S.Ct. 1566, 8 L.Ed.2d 504 (1962). It is apparent, however, that something less than a 'flash of genius' or 'inventive genius' may fulfill the mandate of the statute. Berry Brothers Corporation v. Sigmon, supra; Reiner v. I. Leon Co., 285 F.2d 501, (2 Cir. 1960) (L. Hand), cert. denied, 366 U.S. 929, 81 S.Ct. 1649, 6 L.Ed.2d 388 (1961). A number of cases, both before and after enactment of the statute, have undertaken to comprehensively set forth the standard of invention to be used as a test for determining patent validity. When the mass of verbiage has been distilled, however, we have little more to giude us than the test which is incorporated in section 103, that is, whether, in view of the prior art, the subject matter of the patent would have been obvious at the time of the invention to a person having ordinary skill in the art."

In *L-O-F Glass Fibers Co. v. Watson, Comr. Pats.*, 228 F.2d 40, 107 U.S.P.Q. 197 (1955), the Court of Appeals for the District of Columbia cited with approval Judge Learned Hand's opinion in *Lyon v. Bausch & Lomb Optical Co.*, 224 F.2d 530, 535-36, 106 U.S.P.Q. 1, 6-7 (2d Cir. 1955).

### Point C

**The elimination of the "flash of creative genius" test by §103 is in the public interest.**

The basic constitutional purpose of our patent system is "to promote the progress of science and useful arts". (Constitution Article I, Section 8, Clause 8) The military power and industrial prosperity of our nation are built upon substantial advances in science and useful arts. Therefore, the public interest requires that inventors be encouraged to make substantial advances.

To tell the inventors of our nation that they must have a "flash of creative genius" to obtain a patent, even though they make a substantial advance in the art, is to discourage invention and thereby discourage the progress of science and useful arts. So the Congress acted in the public interest when it enacted §103 to eliminate the "flash of creative genius" test.

## III.

## CONCLUSION

It is therefore respectfully suggested that this case presents a need for a decision by this Court that the "flash

of creative genius" test of the *Cuno* case has been eliminated by §103 of the Patent Codification Act.

Respectfully submitted,

J. VINCENT MARTIN
ALFRED H. EVANS

*Counsel for the Patent, Trade-mark and Copyright Section of the State Bar of Texas as Amicus Curiae*

*Of Counsel:*

RUSSELL E. SCHLORFF
Houston, Texas

## CERTIFICATE OF SERVICE

The undersigned hereby certifies that copies of the foregoing AMICUS CURIAE BRIEF OF THE PATENT, TRADE-MARK AND COPYRIGHT SECTION OF THE STATE BAR OF TEXAS (WITH THE CONSENT OF THE BOARD OF DIRECTORS OF THE STATE BAR OF TEXAS) were served in accordance with Rule 33 by mailing such copies, air mail postage prepaid, to Claude A. Fishburn, Esq., and Orville O. Gold, Esq., counsel for petitioner, at Suite 1217 Commerce Trust Building, Kansas City, Missouri, and to S. Tom Morris, Esq., counsel for respondent, at Suite 630 Amarillo Building, Amarillo, Texas; this _____ day of _____, 1965.

_____

J. Vincent Martin

FILE COPY

Office-Supreme Court, U.S.
FILED
MAR 1 1965
JOHN F. DAVIS, CLERK

# In the Supreme Court of the United States

October Term, 1964.

No. [redacted] 11

WILLIAM T. GRAHAM, AND GRAHAM PLOW, INC., *Petitioners,*

vs.

JOHN DEERE COMPANY OF KANSAS CITY, AND DEERE & COMPANY, *Respondents.*

*On Writ of Certiorari to the United States Court of Appeals for the Eighth Circuit.*

## BRIEF ON BEHALF OF PETITIONERS.

CLAUDE A. FISHBURN and
ORVILLE O. GOLD,
1217 Commerce Trust Building,
Kansas City 6, Missouri,
*Attorneys for Petitioners.*

SMITH-GREEVER, LAW PRINTERS KANSAS CITY MO

## INDEX.


PAGE

Opinions Below ..... 1

Jurisdiction ..... 2

Constitutional and Statutory Provisions and Procedure Rule Involved ..... 3

Questions Presented for Review ..... 5

Statement of the Case ..... 7

Summary of Argument ..... 15

Argument ..... 19

A. The Present Patent Statute and Its Background.... 19

B. The Test of Patentability Applied by the Court of Appeals for the Eighth Circuit is in Conflict with the Requirements of the Statute ..... 25

C. The Patent in Suit ..... 29

D. The Respondents' Structures ..... 32

E. The Prior Art ..... 36

F. The Patent in Suit Meets the Statutory Requirements for Patentability ..... 40

Conclusion ..... 45


### Table of Cases Cited.


Aro Manufacturing Co. v. Convertible Top Replacement Co., 377 U. S. 476, 492; 12 L. Ed. 2d 457, 472 (1964) ..... 25, 26

Samuel Berman v. Andrew Parker, 348 U. S. 26, 32 (1954) ..... 24

PAGE

Cornell v. Adams Engineering Company, 258 F. 2d 874 (5th Cir. 1958) ..... 13
Cuno Engineering Corporation v. Automatic Devices Corporation, 314 U. S. 84, 91 (1941) ..... 20, 22, 25

Diamond Rubber Company v. Consolidated Rubber Tire Company, 220 U. S. 428, 441 (1911) ..... 36
Dunbar v. Meyers, 94 U. S. 187, 197-200 (1876) ..... 19

Eibel Process Company v. Minnesota & Ontario Paper Company, 261 U. S. 45, 63 (1923) ..... 19
Entron of Maryland, Inc. v. Jerrold Electronic Corp., 295 F. 2d 670, 674 (4th Cir. 1961) ..... 26, 42
Expanded Metal Co. v. Bradford, 214 U. S. 366-381 (1909) ..... 19, 43

Fisch v. Gould, 246 F. 2d 5 (3rd Cir. 1957) ..... 25

General Bronze Corp. v. Cupples Products Corp., 189 F. 2d 154, 161 (8th Cir. 1951) ..... 13, 27
Graham v. Cockshutt Farm Equipment, 256 F. 2d 358 (5th Cir. 1958) ..... 2, 7, 8, 36, 41, 42
William T. Graham et al. v. Jeoffroy Mfg., Inc., et al., not reported (D. C. Tex. N. D.) ..... 2, 7
Great Atlantic & Pacific Tea Company v. Supermarket Equipment Corporation, 340 U. S. 147 (1950) ..... 20, 22, 25
Guiberson Corporation v. Equipment Engineers, 252 F. 2d 431 (5th Cir. 1958) ..... 35

Halliburton Oil Well Cementing Company v. Walker, 329 U. S. 1 (1946) ..... 44
Hotchkiss v. Greenwood, 52 U. S. 248 (1850) ..... 19, 22, 23

Jeoffroy Mfg. v. Graham, 206 F. 2d 772 (5th Cir. 1953) ..... 2, 37
Jeoffroy Mfg. v. Graham, 219 F. 2d 511 (5th Cir. 1955) .. 2, 7
Jeoffroy Mfg. v. Graham, 256 F. 2d 360 (5th Cir. 1958) .. 2

Kurtz v. Belle Hat Lining Co., 280 F. 277 (2nd Cir. 1922) .. 35

PAGE

Lincoln Engineering Company of Illinois v. Stewart-Warner Corporation, 303 U. S. 545, 549 (1938) ..... 20
Lyon v. Bausch & Lomb Optical Co., 224 F. 2d 530, 535-536 (2nd Cir. 1955) ..... 23

McClain v. Ortmayer, 141 U. S. 419, 425-429 (1891) ..... 19
Makenzie v. Hare, 239 U. S. 299, 308 (1915) ..... 24
Marvel Specialty Company v. Bell Hosiery Hills, Inc., 330 F. 2d 164, 169-171 (4th Cir. 1964) ..... 23
Mercoid Corporation v. Mid-Continent Investment Company, 320 U. S. 661 (1944) ..... 26
Mercoid Corporation v. Minneapolis-Honeywell Regulator Company, 320 U. S. 680 (1944) ..... 26
Minnesota Mining & Manufacturing Company v. Shuger, 132 F. Supp. 640 (D. Md. 1955) ..... 35
Monroe Auto Equipment Company v. Heckethorn Manufacturing & Supply Company, 332 F. 2d 406, 410-411 (6th Cir. 1964) ..... 23

Newburgh Moire Company v. Superior Moire Company, 237 F. 2d 283 (3rd Cir. 1956) ..... 25

Otto v. Koppers Company, 246 F. 2d 789, 801 (4th Cir. 1957) ..... 40

Pacific Contact Laboratories v. Solex Laboratories, 209 F. 2d 529 (9th Cir. 1953) ..... 25
R. M. Palmer Company v. Luden's, 236 F. 2d 496 (3rd Cir. 1956) ..... 25
Parker Appliance Co. v. Irvin W. Masters, 94 F. Supp. 72, Aff. 193 F. 2d 180 (9th Cir. 1951) ..... 44
Plax Corporation v. Precision Extruders, 239 F. 2d 792 (3rd Cir. 1957) ..... 25

Refrigeration Patents Corporation v. Stewart-Warner Corporation, 159 F. 2d 972 (7th Cir. 1947) ..... 44
Reiner v. I. Leon Co., 285 F. 2d 501, 503-504 (2nd Cir. 1960) ..... 23

PAGE

Washington Market Company v. Hoffman, 101 U. S. 112 (1879) ..... 24
Wyott Mfg. Company v. Doran Coffee Roasting Company, 160 F. Supp. 644 (D. Col. 1958) ..... 35

**Statutes.**

62 Stat. 931, 28 U. S. C. § 1338 (1948) ..... 2
62 Stat. 928, 28 U. S. C. § 1254 (1948) ..... 2
66 Stat. 797, 35 U. S. C. § 101 (1952) ..... 3, 20
66 Stat. 797, 35 U. S. C. § 102 (1952) ..... 3, 20
66 Stat. 798, 35 U. S. C. § 103 (1952) ..... 4, 20-23
66 Stat. 812, 35 U. S. C. § 282 (1952) ..... 4
Fed. R. Civ. P. 52 ..... 5
U. S. Const., Art. I, § 8, cl. 8 ..... 3

**Publications.**

P. J. Federico, Commentary on the New Patent Act, prefacing text of U. S. Code Annotated, Title 35, §§ 1 to 110 (1954) ..... 24
Giles S. Rich, Congressional Intent—Or, Who Wrote the Patent Act of 1952?, Patent Procurement and Exploitation, BNA, pp. 61-78 (1963) ..... 24
Giles S. Rich, The Vague Concept of "Invention" as Replaced by Section 103 of the 1952 Patent Act, Journal of the Patent Office Society, Vol. 46, pp. 855-876 (Dec. 1964) ..... 24

# In the Supreme Court of the United States

**October Term, 1964.**

---

No. 580.

---

WILLIAM T. GRAHAM, AND GRAHAM PLOW, INC., *Petitioners,*

vs.

JOHN DEERE COMPANY OF KANSAS CITY, AND DEERE & COMPANY, *Respondents.*

---

*On Writ of Certiorari to the United States Court of Appeals for the Eighth Circuit.*

---

## BRIEF ON BEHALF OF PETITIONERS.

---

### OPINIONS OF THE COURTS BELOW.

(a) Opinion of the District Court (R. 17-34) reported 216 F. Supp. 272.

(b) Opinion of the United States Court of Appeals for the Eighth Circuit (R. 923), 333 F. 2d 529.

The patent here in suit has also been before other courts in the following cases:

(a) *William T. Graham et al.* v. *Jeoffroy Mfg., Inc., et al.* (D. C. Tex. N. D.) opinion not reported.

(b) *Jeoffroy Mfg.*, v. *Graham*, 219 F. 2d 511 (5 Cir., 1955), holding patent valid and infringed. Certiorari denied, 350 U. S. 826. (See Appendix D Petition for Writ of Certiorari this case.)

(c) *Jeoffroy Mfg., Inc. et al.* v. *William T. Graham et al.* (D. C. Tex. N. D) contempt proceeding, opinion not reported.

(d) *Jeoffroy Mfg.*, v. *Graham*, 256 F. 2d 360 (5 Cir., 1958) (contempt affirmed). (See Appendix E Petition for Writ of Certiorari this case.)

(e) *Graham* v. *Cockshutt Farm Equipment*, (D. C. Tex. N. D.) opinion not reported.

(f) *Graham* v. *Cockshutt Farm Equipment*, 256 F. 2d 358, (5 Cir., 1958) holding patent valid but not infringed. (See Appendix F Petition for Writ of Certiorari this case.)

## JURISDICTION.

This is a suit arising under the Patent Laws of the United States, Title 28, Section 1338, of the United States Code. Statutory provision believed to sustain the jurisdiction is Title 28, Section 1254, of the United States Code. The date of the decree of the United States Court of Appeals for the Eighth Circuit is June 18, 1964, (R. 931) and a petition for rehearing thereof was denied July 13, 1964 (R. 939).

## CONSTITUTIONAL AND STATUTORY PROVISIONS AND PROCEDURE RULE INVOLVED.

This case involves Clause 8 of Section 8, Article I of the Constitution of the United States, and Sections 101, 102, 103 and 282 of Title 35 of the United States Code, and Federal Rule of Civil Procedure Number 52, all of which are set forth in the following:

CONSTITUTION.

Article I, § 8, Clause 8.

The Congress shall have the power * * * to promote the Progress of Science and useful Arts, by securing for limited Times to Authors and Inventors the exclusive Right to their respective Writings and Discoveries; ***

STATUTES.

Title 35 U. S. C.

§ 101. Inventions patentable.

Whoever invents or discovers any new and useful process, machine, manufacture or composition of matter, or any new and useful improvement thereof, may obtain a patent therefor, subject to the conditions and requirements of this title.

§ 102. Conditions for patentability; novelty and loss of right to patent.

A person shall be entitled to a patent unless—

(a) the invention was known or used by others in this country, or patented or described in a printed publication in this or a foreign country, before the invention thereof by the applicant for patent, or

(b) the invention was patented or described in a printed publication in this or a foreign country or in public use or on sale in this country, more than one year prior to the date of the application for patent in the United States, or

(c) he has abandoned the invention, or

(d) the invention was first patented or caused to be patented by the applicant or his legal representatives or assigns in a foreign country prior to the date of the application for patent in this country on an application filed more than twelve months before the filing of the application in the United States, or

(e) the invention was described in a patent granted on an application for patent by another filed in the United States before the invention thereof by the applicant for patent, or

(f) he did not himself invent the subject matter sought to be patented, or

(g) before the applicant's invention thereof the invention was made in this country by another who had not abandoned, suppressed, or concealed it. In determining priority of invention, there shall be considered not only the respective dates of conception and reduction to practice of the invention, but also the reasonable diligence of one who was first to conceive and last to reduce to practice, from a time prior to conception by the other.

§ 103. Conditions for patentability; non-obvious subject matter.

A patent may not be obtained though the invention is not identically disclosed or described as set forth in Section 102 of this title, if the differences between the subject matter sought to be patented and the prior art are such that the subject matter as a whole would have been obvious at the time the invention was made to a person having ordinary skill in the art to which said subject matter pertains. Patentability shall not be negatived by the manner in which the invention was made.

§ 282. Presumption of validity; defenses.

A patent shall be presumed valid. The burden of establishing invalidity of a patent shall rest on a party establishing it. * * *

## FEDERAL RULES OF CIVIL PROCEDURE.

Rule 52. Findings by the Court.

(a) Effect. In all actions tried upon the facts without a jury or with an advisory jury, the court shall find the facts specially and state separately its conclusion of law thereon and direct the entry of the appropriate judgment; and in granting or refusing interlocutory injunctions the court shall similarly set forth the findings of fact and conclusions of law which constitute the grounds of its action. Requests for findings are not necessary for purposes of review. Findings of fact shall not be set aside unless clearly erroneous, and due regard shall be given to the opportunity of the trial court to judge of the credibility of the witnesses. The findings of a matter, to the extent that the court adopts them, shall be considered as the findings of the court. If an opinion or memorandum of decision is filed, it will be sufficient if the findings of fact and conclusions of law appear therein. Findings of fact and conclusions of law are unnecessary on decisions of motions under Rules 12 or 56 or any other motion except as provided in Rule 41(b).

## QUESTIONS PRESENTED FOR REVIEW.

1. Did the Graham Patent No. 2,627,798 meet the Constitutional and statutory requirements for patentability?

2. Did the Court of Appeals for the Eighth Circuit in holding the Graham Patent No. 2,627,798 invalid, apply a test as to patentability contrary to the conditions and requirements for patentability expressly set forth in Title 35 of the United States Code, Sections 101, 102 and 103?

3. Did the Court of Appeals for the Eighth Circuit err in suggesting the absence of details of function or result

in a specification or claims of a patent is a proper ground for declaring the Graham Patent invalid when the patent clearly discloses the structure?

4. Did the Court of Appeals for the Eighth Circuit err in holding the presumption of validity of the Graham Patent was weakened by applicable prior art not cited by the Patent Office when the additional cited prior art was not found to be more pertinent?

## STATEMENT OF THE CASE.

The patent in suit was first involved in litigation in the District Court for the Northern District of Texas in the case of *William T. Graham et al.* v. *Jeoffroy Mfg., Inc., et al.* where the patent was held to be invalid for double patenting. On appeal to the United States Court of Appeals for the Fifth Circuit, the decision of the District Court was reversed and patent was held valid and infringed by the devices there involved, 219 F. 2d 511. Certiorari denied, 350 U. S. 826. (Appendix D Petition for Writ of Certiorari this case.)

The patent was again before the same District Court in the Northern District of Texas in the case of *Graham* v. *Cockshutt Farm Equipment,* where the patent was held valid and not infringed by the devices there involved. On appeal to the United States Court of Appeals for the Fifth Circuit, the decision of the District Court was affirmed, 256 F. 2d 358. (Appendix F Petition for Writ of Certiorari this case.)

In the *Jeoffroy* case, *supra,* the action was commenced as a declaratory judgment action relative to a Graham Patent, No. 2,493,811, which had been held valid and infringed in earlier litigation. Jeoffroy had changed its structure and sought a declaration of non-infringement. By counterclaim, Graham brought in patent No. 2,627,798 and urged infringement of both 811 and 798 patents. The District Court considered the 811 patent a pioneer patent and of such broad scope that the new Jeoffroy structure (Pls. Ex C.), which could not be distinguished in any material respect from the 798 patent, infringed said 811 patent and that said 798 patent was invalid for double patenting. The Court of Appeals for the Fifth

Circuit held that the 811 patent was not entitled to such a broad scope, was not infringed by the new Jeoffroy structure, that the 798 patent was valid and entitled to limited protection. The Court further stated:

> "Other factors strongly influencing and, we think reinforcing our conclusion as to the validity of 798 are: (1) that presumption of validity which attends the grant of a patent by the Patent Office where, as here, it appears to have fully considered and distinguished the very prior art patents here principally relied upon as anticipation *(Southern States Equip. Corp.* v. *USCO Power Equip. Corp., supra)*; (2) the rule that the burden of proof of invalidity is on the party seeking to upset a patent's prima facie validity from issuance, and that any reasonable doubt will be resolved against him, (3) the further rule, long recognized by this Court, that an improvement combination is patentable even though its constituent elements are singly revealed by the prior art, where, as here, it produces an old result in a cheaper and otherwise more advantageous way; * * *

In the *Cockshutt* case the Court of Appeals for the Fifth Circuit recognized that it had the power to change its position as to the validity of the 798 patent and concluded after careful consideration that its decision previously made as to the validity of the patent should stand. Of particular note is the fact that in that case all of the alleged prior art that is in this case before this Court was considered in the Cockshutt case, in which the Court of Appeals for the Fifth Circuit held the patent in suit valid. (Stipulation item 7, R. 15.)

The patent in suit (Pls. Ex. A; R. 577-587) relates to a structure used in chisel plowing. In such plowing, chisel tools are secured to the lower ends of shanks carried on mobile frames which, when moved over the

ground with the tools extending therein, results in the chisel tools breaking the soil and forming small alternate ridges in furrows having exposed surfaces and leaving vegetation and other emulsive material normally occurring on the field on top of the ground. This was found to be particularly desirable in the wheat country as it tended to reduce erosion of the soil by wind and rain. In chisel plowing in the plains country wherein the ground was substantially free of rocks, the upper forward ends of shanks were rigidly secured to plow beams or frames, the shanks extending rearwardly therefrom and curving downwardly to the end mounting the chisel tool, and any resiliency or flexing of the shanks was only in the portions that extended rearwardly from the clamps. Bending of the shanks resulted in maximum stress in the shanks at the point immediately rearward of the clamp. When such structures were used in the farming areas having rocky conditions, the plows were bent and broken and the structures were not satisfactory (R. 241). When the tools are pulled through the ground by a tractor and a tool on a shank strikes a buried rock, the structure may be subjected to extreme shocks. The forces on the chisel tool could result in forces on the forward ends of the shanks up to 4,000 pounds or so (R. 409).

Graham had provided a structure for a solution to the problem of chisel plowing in rocky areas and had been issued the Graham 811 patent thereon. In endeavoring to find other structures that would also provide a solution, Graham devised the structure of the patent in suit (Pls. Ex. A; R. 577-587) which, while entitled "Clamp for Vibrating Shank Plows," discloses and claims a structure mounting tool carrying shanks on mobile frames for chisel plowing particularly in rocky areas where the structure is subjected to severe shocks by the tools striking rocks or

immobile objects. The invention provides a structure that has an ability to flex for absorbing the shock so as to eliminate or reduce breakage or damage to the structure.

The present case originated by petitioners bringing suit against respondents alleging infringement of Claim 1 of the 798 patent by Deere 650 series clamps (Pl. Ex. I) and Claims 1 and 2 by Deere 100 series clamps (Pl. Ex. J). The claims are:

> Claim 1. In a plow having a frame and a ground working tool provided with a shank adapted to rock relatively to the frame when the plow is in operation in a forward direction, a mounting for pivotally attaching and supporting the shank of the ground working tool to a transverse member of the frame, the mounting including a fixed member adapted to be fixed to the transverse member of the frame and having a longitudinally extending underface terminating forwardly of the transverse member to which said mounting is adapted to be fixed, the fixed member having ears extending rearwardly from said underface at the sides thereof, a shank attaching member having an elongated plate portion provided with an upper face corresponding with and normally in contact with said underface of the fixed member and provided with a longitudinally extending underface in engagement with a corresponding upper face of the shank whereby the plate portion of the shank attaching member is between the shank and the fixed member, means connecting the elongated plate portion with the shank for maintaining the upper face of the shank in constant continuous contact with the underface of said plate portion of the shank attaching member, a transverse pin pivotally connecting the shank attaching member to the fixed member at the rear ends of said normally contacting faces and whereon the shank attaching member pivots upon rocking movement of the shank, a coil spring having one end seated on the forward end of the fixed mem-

ber, and means having connection with the forward end of the shank and with the other end of the coil spring whereby the spring yieldably maintains said normal contact of the upper face of the plate portion of the shank attaching member with the underface of the fixed member to maintain the normal plowing depth of the ground working tool.

Claim 2. In a plow having a frame and a ground working tool provided with a shank adapted to rock relatively to the frame when the plow is in operation in a forward direction, a mounting for pivotally attaching and supporting the shank of the ground working tool to a transverse member of the frame, the mounting including a fixed member adapted to be fixed to the transverse member of the frame and having a longitudinally extending underface terminating forwardly of the transverse member to which said mounting is adapted to be fixed, the fixed member having ears extending rearwardly from said underface at the sides thereof, a shank attaching member having an elongated plate portion provided with an upper face corresponding with and normally in contact with said underface of the fixed member and provided with a longitudinally extending underface in engagement with a corresponding upper face of the shank whereby the plate portion of the shank attaching member is between the shank and the fixed member, said shank attaching member having a lug extending upwardly between said ears of the fixed member and disposed at the rear end of the plate portion and above the plane of the underface of the fixed member, said shank attaching member having depending means embracing the shank at the rear end of said plate portion, a bolt connecting the forward end of the plate portion with the forward end of the shank and cooperating with the shank embracing means in maintaining the upper face of the shank in constant continuous contact with the underface of said plate portion, a pivot pin extending transversely through said lug and carried by the

> ears with the axis thereof above the plane of the underface of the fixed member whereby the normally contacting face of the shank attaching member immediately moves out of contact with and away from the face of the fixed member when the shank attaching member pivots upon rocking movement of the shank, a coil spring having one end seated on the forward end of the fixed member, and means having connection with the forward end of the shank and with the other end of the coil spring whereby the spring yieldably maintains said normal contact of the upper face of the plate portion of the shank attaching member with the underface of the fixed member.

In the District Court, following a trial involving eight days, in which the structures and moving pictures of plows in operation were shown and the court clearly advised in the premises and the submission of extensive briefs and proposed findings of fact, judgment was rendered holding the patent valid and infringed. Specifically, the Trial Court found (216 F. Supp. 272, 278):

> "The disclosures of the prior art not cited by the Patent Office * * * are similar to some of the patents relied upon by the Patent Office Examiner. * * * Hence the statutory presumption of validity of the Graham patent in suit is not weakened or destroyed" (Finding XI; R. 27).
>
> "* * * The particular arrangement of the elements disclosed by 798 is not present in any single reference or as a whole" (Finding XII; R. 28).
>
> "An improved functional result is obtained by the Graham 798 structure * * *" (Finding XIII; R. 28).
>
> "* * * 798 patent is an improvement patent. * * * Taken as a whole, the Graham 798 structure is sufficiently different in the operative relationship of the shank and pivoted member with a slight but significant difference in the flexing of the forward part

of the shank that it is not found in the prior art so that the Graham 798 patent involves invention" (Finding XIV; R. 28).

"The differences between the Graham 798 patent and the prior art are such that the Graham 798 structure * * * would not have been obvious at the time Graham made his invention to a person having ordinary skill in the art of agricultural implements and other related arts * * *" (Finding XV; R. 28-29).

"It demanded invention of the quality required by the patent statutes, Title 35, U. S. C., to produce the structure of the Graham 798 patent * * *" (Finding XVI; R. 29).

Respondent duly filed an appeal on July 17, 1963, and after the filing of briefs and oral argument the Court of Appeals for the Eighth Circuit reversed the trial court as to the validity of the Graham 798 patent but did not consider the question of infringement. Although the Court of Appeals reversed the trial court, it did not controvert the findings of fact below as to the improved functional result. It reversed primarily on the ground that the trial court had not applied a proper legal standard in determining the validity, *because the trial court did not find a new result.* The Court of Appeals set forth its test of patentability and also clearly stated that its test was different than that applied by the Court of Appeals of the Fifth Circuit. The test applied by the Eighth Circuit was stated by quoting with approval the following:

"The bringing together of old elements in a mechanism involving no new principle, to produce an old result, however skillfuly done, even though the result marks an advance in efficiency and utility, is but an exercise of mechanical skill and not invention." *General Bronze Corp.* v. *Cupples Products Corp.*, 8 Cir., 189 F. 2d 154, 161 (1951). (R. 930).

The Court of Appeals then referred to the test of the Fifth Circuit, as follows:

> "Unlike our court, the Fifth Circuit has 'long recognized * * * that an improvement combination is patentable even though its constituent elements are singly revealed by the prior art, where * * * it produces an *old result in a cheaper and otherwise more advantageous way.*' (Emphasis supplied.) 219 F. 2d at 519. For other recognition by the Fifth Circuit of the 'old result in a more efficient and economical way' see, *Cornell* v. *Adams Engineering Company, supra,* 258 F. 2d at 875-876." (R. 930).

The Court of Appeals then clearly showed the application of the Eighth Circuit test in the following:

> "Here, the trial court couched its Finding XV rather precisely in the statutory standard of invention found in 35 U. S. C. § 103, and found that the 798 Patent structure would not have been obvious at the time it was made to a person having ordinary skill in the art. But, other findings of the court lay stress on 'an *improved* functional result,' and nowhere does the court find any new or significantly different result. Seemingly, the trial court failed to apply the more exacting standard which in our view is implicit in the teachings of the Supreme Court in *Cuno Engineering Corporation, supra,* 314 U. S. 84, and *Great A. & P. Tea Co., supra,* 340 U. S. 147, and which we have applied in numerous cases subsequent thereto." (R. 930-931).

To bolster its position, the Court of Appeals referred to the significance of the difference in the flexing of the structure of the patent in suit from that of the prior art and held that it did not involve inventive genius but the reason for holding the patent invalid was still that there was no new result. This is clear in the following:

"While perhaps more efficient, the inversion of the parts so as to allow the shank to flex downwardly away from the plate above it did not bring about a significantly new or different result, and would have been obvious to a person having ordinary skill in the art."

## SUMMARY OF ARGUMENT.

### A. The Present Patent Statute and Its Background.

The constitution empowers Congress to enact statutes relating to issuance of patents. Prior to the 1952 Act, Congress had never declared any standard by which patentability could be determined. There had developed from judicial opinions a so-called "standard of invention" that was recognized by the revisers as causing great difficulty in determining what was patentable. In composing the bills that culminated in enactment of Sections 101, 102 and 103 of the 1952 Act, the revisers sought to eliminate the vague "standards" and stabilize the law. The legislature is the prime guardian of the public interest served by the patent system. Congress has spoken and has defined for the first time a statutory requirement for *patentability*. The wording of the statute is clear and should be followed. It overrules the various "standards of invention" stated in prior judicial opinions. The directive of the statute is to determine whether the invention "would have been obvious" on the basis of the differences between it and the prior art and the ordinary skill of a person in the art as of the time of the invention.

### B. The Test of Patentability Applied by the Court of Appeals for the Eighth Circuit is in Conflict with the Requirements of the Statute.

The Court of Appeals is applying standards on tests as to patentability based upon opinions in the Cuno and A. & P. cases. Both of those opinions were prior to the 1952 Act. It in effect is holding that if the patent structure is a combination of old elements and does not produce a new result, the patent is invalid. If the result is an advance in efficiency and utility or an improved functional result, then it is but an exercise of mechanical skill and invalid by the view of said court. The statute has no requirement for determining patentability which requires the invention to produce a new result. The Court did not recognize that a different arrangement of old elements producing an improved result may be patentable if not obvious to a person having ordinary skill in the art. It also disregarded Rule 52 of the Federal Rules of Civil Procedure and did not properly consider the trial court's finding regarding the presumption of validity.

### C. The Patent in Suit.

The 798 structure is a mounting for shanks having chisels for plowing in rocky areas. It includes a body member with a plate member hinged thereon. The shank extends along the plate and is connected to it by a bolt and nut at the forward end of said plate. When the chisel strikes a rock the forces cause the forward end of the plate to swing downwardly. Also the portion of the shank along the plate tends to flex or bow away from the plate and absorb some of the shock. This flexing was not possible with the prior art, as in the prior devices the

forces tighten the shank against the plate and prevent the shank flexing in that area.

### D. The Respondents' Structures.

Respondents' structures were designed with full knowledge of the patent in suit and the prior art. Their patent department advised the first designs infringed the patent. Only minor changes that did not change operation were incorporated in the devices they marketed. The engineer admitted the structure gave a better stress arrangement. The respondents cast aside those structures that were available from the prior art because they coveted the advantages that resulted from the advance provided by the 798 structure. This should be evidence that the 798 device was new, novel, represented progress in the art and met the statutory requirements for a valid patent.

### E. The Prior Art.

All of the prior art, both patents and uses relied upon by respondents, was before the Court of Appeals for the Fifth Circuit in a case wherein the patent in suit was held to be valid. The trial court in this case found the devices of the art not cited by the Patent Office was similar to some that were cited and the Court of Appeals for the Eighth Circuit did not controvert that finding.

The prior art showed an arrangement of a shank and hinged plate member wherein forces acting on the shank tended to bend and hold the shank against the plate and prevent flexing in that portion of the shank. In the patent in suit the forces tended to bow the shank away from the plate providing flexing and shock absorption. While the prior art disclosures were available for over fifty years, not even those skilled in the art seeking to solve the

problem of plowing in rocky areas, conceived of a structure that would flex and perform like the 798 patent.

### F. The Patent in Suit Meets the Statutory Requirements for Patentability.

The statutory requirement that the patentable device be novel, useful and not obvious to a person having ordinary skill in the art was met. The Court of Appeals recognized the 798 structure was a different arrangement from those of the prior art; that it was new. It was useful. A large number of devices coming under the patent were sold by Jeoffroy. There was no showing of any condition under Section 102 of the statute to prevent patentability. There was a problem in plowing in rocky areas. The prior art relied upon by respondents was the same arrangement that had been disclosed in Rix and available to the industry for fifty years, but not even those of exceptional skill in the art could conceive of the arrangement of the 798 patent.

There is no requirement in the statute that the device must provide a new result. The holding by the Court of Appeals that when the device was found to provide an improved functional result it was obvious to a person skilled in the art, is not in accordance with the statute.

## ARGUMENT.

### A. The Present Patent Statute and Its Background.

Patents in the United States exist only by virtue of statutes enacted by Congress pursuant to the enumerated power set forth in Article 1, Section 8 of the Constitution. The statutes enacted by Congress require that the invention to be patentable must be new. While none of the predecessor statutes to the 1952 Act set forth any statutory "Standard of Invention" as a condition for patentability, it has long been recognized that in order to have a sound patent system, the patentable invention must have more than bare novelty. Patents should not be granted on those inventions which would arise spontaneously given the need or desire for them. The requirement that patentable invention be more than the work of a skilled mechanic was approved by the Supreme Court in *Hotchkiss* v. *Greenwood,* 52 U. S. 248 (1850). That decision stated the requirement for patentable invention as follows:

> "* * * For unless more ingenuity and skill in applying the old method * * * were required than were possessed by an ordinary mechanic acquainted with the business, there was an absence of that degree of skill and ingenuity which constitutes essential elements of every invention. In other words, the improvement is the work of the skilled mechanic, not that of the inventor." 52 U. S. at 266.

Generally in the ensuing years this Court applied this requirement with some verbal variances. See e.g., *Dunbar* v. *Meyers,* 94 U. S. 187, 197-200 (1876); *McClain* v. *Ortmayer,* 141 U. S. 419, 425-429 (1891); *Expanded Metal Co.* v. *Bradford,* 214 U. S. 366-381 (1909); *Eibel Process*

*Co.* v. *Minn. & Ontario Paper Co.*, 261 U. S. 45, 63 (1923). In more recent years the terminology and associated discursive comments employed by this and other courts relative to the delineation of the requirements for patentability in certain cases has differed markedly from that of earlier cases. In fact, the requirements finally evolved into a so-called "standard of invention." See *Lincoln Engineering Co., of Ill.*, v. *Stewart Warner Corp.*, 303 U. S. 545, 549 (1938); *Cuno Engineering Corp.* v. *Automatic Devices Corp.*, 314 U. S. 84, 91 (1941). *Great Atlantic & Pacific Tea Co.* v. *Supermarket Equipment Corp.*, 340 U. S. 147 (1950).

It would appear from some opinions that the thought was that if the item was an "invention," then it was patentable, and if it was not patentable, then it was not an "invention." Invention is, however, merely something that has been found out or devised or discovered. For example, a thing may be invented over and over by the use of inventive faculties or by inventive acts by different originators but the subsequent things are not patentable for want of novelty. The question of patentability should not be the degree of inventive skill or whether the device meets some indefinite "standard of invention." It should be whether under the statute it is patentable.

Prior to 1952 Congress had never declared any standard by which patentability could be determined. However, in the late 1940's Congress considered codification of Patent Laws and enactment of statutory standards. In preparing the statute, the revisers recognized that great difficulty had always existed in the law as to what was patentable, because to a large extent the so-called standards have been indefinite and subjective. The revisers sought to eliminate such vague standards and stabilize the law. These efforts culminated in enactment in 1952 of Sections 101, 102 and

103 of Title 35 of the United States Code, *supra*, pages 4, 5.

As noted in both the Senate and House reports on the subject legislation, "Section 101 sets forth the subject matter that can be patented, 'subject to the conditions and requirements of this title.' The conditions under which a patent may be obtained follow, and Section 102 covers the condition relating to novelty" (S. Rep. No. 1979, 82nd Cong., 2nd Sess. 5, 1952); (H. R. Rep. No. 1923, 82nd Cong., 2nd Sess. 6, 1952). The Senate and House reports also stated that there were changes in substantive statutory law and that a major change or innovation consisted in incorporating a requirement for patentability in Section 103. More specifically, with respect to Section 103, the reports state:

> "Section 103, for the first time in our statute, provides a condition which exists in the law and has existed for more than 100 years, but only by reason of decisions of the courts. An invention which has been made, and which is new in the sense that the same thing has not been made before, may still not be patentable if the difference between the new thing and what was known before is not considered sufficiently great to warrant a patent. That has been expressed in a large variety of ways in decisions of the Courts and in writings. Sec. 103 states this requirement in the title. It refers to the difference between the subject matter sought to be patented and the prior art, meaning what was known before as described in section 102. If this difference is such that the subject matter as a whole would have been obvious at the time to a person skilled in the art, then the subject matter cannot be patented."

Section 103 says that what is patentable must not have been obvious to one of ordinary skill in the art involved

at the time the invention was made. Clearly, this is a parallel to that requirement set down in the doorknob case of *Hotchkiss* v. *Greenwood, supra.* This section of the statute does not provide a "standard of invention." It is not called a requirement of invention. The presence or absence of invention is not mentioned. The use of the term "invention" was apparently carefully avoided and certainly the last sentence of Section 103 clearly eliminated any requirement that the new device reveal the flash of creative genius which some courts required for validity after this Court's decision in *Cuno Engineering Corp.* v. *Automatic Devices Corp.,* 314 U. S. 84 (1941).

This Patent Act of 1952 came after the *Great A. & P. Tea Company* v. *Supermarket Equipment Corp.* case which was decided in 1950 and the Court of Appeals of the Eighth Circuit is admittedly applying tests or standards based on the opinions in said Cuno and A. & P. cases. More important, however, the Court of Appeals for the Eighth Circuit applies a test that requires a new result. By its test if the device is different from the prior art and provides the same result by a diferent manner or if it is merely a better result, it would not be patentable, or if patented the patent would be held invalid. There is nothing in the statute requiring that a patentable invention provide a new result. There is no requirement that there be a different result. The statute requires that the invention not be obvious at the time to a person skilled in the art. The invention is novel, if it meets the requirements of Section 102, and if it would not have been obvious to a person skilled in the art at the time of invention, it should be patentable under the statute. If it meets the requirements it is patentable if it produces an old result in a cheaper or otherwise more advantageous way as has

been held by the Court of Appeals of the Fifth Circuit in holding of the patent in suit valid.

Congress in Sections 101, 102 and 103 of the Patent Act of 1952 provided a statutory definition of the requirements for patentability. This was a change from the "standards of invention" of the judicial opinions expressed in the decades immediately preceding the Act. The Patent Act of 1952 was the expression of clear intent by Congress to return or restore the old requirement laid down in *Hotchkiss* v. *Greenwood, supra.* The enactment of Section 103 and its change was realistically appraised and appreciated by Judge Learned Hand in *Lyon* v. *Bausch & Lomb Optical Co.,* 224 F. 2d 530, 535-536 (2 Cir., 1955). Judge Hand again considered the statute in *Reiner* v. *I. Leon Co.,* 285 F. 2d 501, 503-504 (2 Cir., 1960), wherein he said:

> "We still cannot escape the conclusion—as we could not when *Lyon* v. *Bausch & Lomb Optical Co., supra,* was decided in 1955 — that Congress deliberately meant to restore the old definition and to raise it from a judicial gloss to a statutory command."

In applying the statute in *Marvel Specialty Company,* v. *Bell Hosiery Hills, Inc.,* 330 F. 2d 164, 169-171 (4 Cir., 1964), the court found that after distilling the mass of verbiage of other cases that had undertaken to set forth the "standard of invention," it had little to guide it and that it became necessary to start with the statute.

The Court of Appeals for the Sixth Circuit in *Monroe Auto Equipment Company* v. *Heckethorn Mfg. & Supply Company,* 332 F. 2d 406, 410-411 (6 Cir., 1964), recognized the difficulty of defining invention. It then turned to the statute and applied the test specified therein.

In many opinions the courts have written extensive dissertations seeking to interpret the language of the 1952

Patent Act. They would do well to look through the writings of certain men that aided in drafting the Act. Included in such writings are:

> "Commentary on the New Patent Act" by P. J. Federico, prefacing text of U. S. Code Annotated, Title 35, Patents, Section 1 to Section 110; also "Congressional Intent—or, Who Wrote the Patent Act of 1952" by Hon. Giles S. Rich, in Patent Procurement and Exploitation, BNA 1963, pp. 61-68; and "The Vague Concept of 'Invention' as Replaced by Section 103 of the 1952 Patent Act" by Hon. Giles S. Rich, Journal of the Patent Office Society, December, 1964, Vol. 46, pp. 855-876.

In regard to statutory interpretation, this Court has stated that "Whatever was said in the debates on the bill—preceding its enactment or during its enactment, must give way to its language * * *." *Makenzie* v. *Hare*, 239 U. S. 299 at 308 (1915) and that "The statute, ought upon the whole, be so construed that, if it can be prevented, no clause, sentence or word shall be superfluous, void or insignificant." *Washington Market Company* v. *Hoffman*, 101 U. S. 112 (1879). The language of Sections 101, 102 and 103 are clear and definite and the lower court should be instructed to look to the statute for the requirements of patentability and not seek through a maze of confusing and misleading verbiage. The Act itself distinctly recites the conditions and provisions.

While the public interest is dominant in the patent system, the legislature is the prime guardian of the public interest. This was recognized in *Berman* v. *Parker*, 348 U. S. 26 at 32 (1954):

> "Subject to specific constitutional limitations, when the legislature has spoken, the public interest has been declared in terms well nigh conclusive."

In the instant situation, there can be no doubt that Congress has spoken and has defined for the first time a statutory requirement for patentable invention. The wording of the statute is clear and should be followed. It overrules the various "standards of invention" stated in prior judicial opinions. Now in patent cases the court should recognize that under the statute there is no "standard of invention." The directive of the statute is to determine whether the invention "would have been obvious" on the basis of the differences between it and the prior art and the ordinary skill of a person in the art as of the time of the invention. These are the factors, and these alone, by which courts are to determine the existence of the requirements for patentability as defined in Section 103.

### B. The Test of Patentability Applied by the Court of Appeals for the Eighth Circuit is in Conflict with the Requirements of the Statute.

The Court of Appeals in this case is admittedly applying tests or standards as to patentability based upon the opinions in *Cuno Engineering Corp.* v. *Automatic Devices Corp.*, 314 U. S. 84 (1941) and the *Great A. & P. Tea Company* v. *Supermarket Equipment Corp.*, 340 U. S. 147 (1950). Both of those opinions were handed down before the Patent Act of 1952, and were overruled thereby. The lower courts have recognized that the "flash of genius" theory of the Cuno case (*supra*) was overruled. *Pacific Contact Labs.* v. *Solex Labs.*, 209 F. 2d 529 (9 Cir., 1953). *R. M. Palmer Co.* v. *Ludens*, 236 F. 2d 496 (3 Cir., 1956). *Newburgh Moire Co.* v. *Superior Moire Co.*, 237 F. 2d 283 (3 Cir., 1956). *Plax Corp.* v. *Precision Extruders*, 239 F. 2d 792 (3 Cir., 1957). *Fisch* v. *Gould*, 246 F. 2d 5 (3 Cir., 1957). This Court also has recognized that the 1952 Act

overruled prior decisions. The decision in *Aro Mfg. Co.* v. *Convertible Top Replacement Co.*, 377 U. S. 476, 492; 12 L. Ed. 457, 472 (1964); recognized that section 271 overruled in part the opinion as to contributory infringement in *Mercoid Corp.* v. *Mid Continent Investment Co.*, 320 U. S. 661 (1944) and *Mercoid Corp.* v. *Minneapolis-Honeywell Regulator Co.*, 320 U. S. 680 (1944).

Instead of adhering to a position it took after the Cuno case, *supra*, the Court of Appeals should first look to the statute and particularly to what constituted a major change or innovation in the statute where Congress for the first time set forth the requirements for patentability. The Court of Appeals paid lip service to the statute, but clearly throughout its opinion was applying a so-called standard wherein the patent on the mechanism would be invalid unless said mechanism produced a new result. It is submitted that the Constitutional Clause which enabled Congress to enact the patent statutes contained no standard for determining patentability which required the invention to produce a new result. The present statute, the Patent Act of 1952, sets out all of the requirements for patentability in the clearest possible form, 35 U. S. C. 101, 102 and 103. Section 101 says patentable inventions must be new and useful. Section 102 provides conditions for patentability and defines novelty, and Section 103 sets forth the other requirement, that the subject matter as a whole would not have been obvious at the time the invention was made to a person having ordinary skill in the art. Also this Section states that patentability shall not be negatived by the manner in which the invention was made. Nowhere in that statute is there any requirement that to be patentable an invention must produce a new result. As stated in *Entron of Maryland Inc.*, v. *Jerrold Electronic Corp.*, 295 F. 2d 670, 674 (4 Cir., 1961); "* * * the combi-

nation patent is not invalid for failure of its elements to demonstrate a 'new function'."

The Court of Appeals clearly stated its position when it quoted with approval from a prior opinion by that court in *General Bronze Corp.* v. *Cupples Products Corp.*, 8 Cir., 189 F. 2d 154, 161, rendered in 1951 before the present statute. The Court of Appeals referred to the trial court's finding that the 798 patent provided an improved functional result. In reference to that finding, the court italicized the word "improved" and again in reference to the trial court's finding, it emphasized the word "improved" stressing that the trial court did not find any new result. The real basis for the Court of Appeals holding the 798 patent invalid is shown in the part of the opinion that reads as follows:

> "Here, the trial court couched its Finding XV rather precisely in the statutory standard of invention found in 35 U. S. C. § 103, and found that the 798 Patent structure would not have been obvious at the time it was made to a person having ordinary skill in the art. But, other findings of the court lay stress on 'an *improved* functional result,' and nowhere does the court find any new or significantly different result. Seemingly, the trial court failed to apply the more exacting standard which in our view is implicit in the teachings of the Supreme Court in *Cuno Engineering Corporation, supra,* 314 U. S. 84, and *Great A. & P. Tea Co., supra,* 340 U. S. 147, and which we have applied in numerous cases subsequent thereto."

The Court of Appeals for the Eighth Circuit clearly refuses to recognize that a patentable invention is permitted under the statute when a different structure is devised to provide the same function and result. On the basis of that court's so-called "standard," an automobile

would not be a patentable invention over a wagon as they would both be vehicles on wheels to provide a common result, transportation over a road from one place to another. This "standard" would ignore the fact that the automobile would provide the transportation in a faster and more advantageous way.

Furthermore, an invention in a structure may have the same broadly identified elements and function to provide the same broad result as an old structure, but the association of the elements or arrangement thereof can be different, whereby in operation there is a difference in the action, and if the structure is new and novel and not obvious to a person skilled in the art at the time of invention, it should be patentable under the statute. However, in such a case the Court of Appeals for the Eighth Circuit, with its disregard of the statute, and by applying its old, outdated test would hold that the invented structure, producing an old result, even though skillfully done, and even though there was a marked advance in efficiency and utility, would because of the old result be "but an exercise of mechanical skill and not invention." In other words, the fact that it produced an old result would be conclusive that the patent would be held invalid in the Eighth Circuit.

The trial court in this case found that the 798 structure was different from the prior art. The Court of Appeals recognizes there were differences from the prior art, but the Court of Appeals held that the difference did not meet the requirements of patentability. The reason upon which this holding was based was that the structure did not produce a new result, the court saying:

> "While perhaps more efficient, the inversion of the parts so as to allow the shank to flex downwardly away from the plate above it did not bring about a

> significantly new or different result, and would have been obvious to a person having ordinary skill in the art."

It is submitted that the Court of Appeals did not consider the trial court's finding as to presumption of validity and in doing so did not give proper effect to the statute 35 U. S. C., Sec. 282. It disregarded Rule 52 of the Federal Rules of Civil Procedure and applied an inappropriate test as to patentability in holding the patent invalid for the reason the structure did not produce a new result. This is in conflict with the requirements of the statute.

### C. The Patent in Suit.

The patent in suit is entitled "Clamp for Vibrating Shank Plows." It was issued February 10, 1953 on an application filed August 27, 1951 (Pl. Ex. A; R. 577-587). The clamp is used on a frame beam to connect the upper forward end of a resilient shank thereto with the lower end of the shank carrying a chisel for plowing or other ground working operations. The clamp includes a body member or fixed part that is secured to the frame and a movable part in the form of a plate pivotally connected at its rear portion to the fixed member by a pivot pin with the plate portion extending forwardly or longitudinally to the direction of travel of the plow. The upper forward end of the shank is arranged under the plate portion with the forward end of the shank connected to the forward end of the plate at a substantial distance from the pivotal axis thereof. The structure shown in the patent had a bolt and nut forming the connection between the forward end of the shank and the forward end of the plate. A coiled spring, arranged at the forward end of the body, acts through a nut, washer and spring rod acts on the

shank and plate member to resiliently urge the forward end thereof to a stop engagement with the body to normally hold the shank in plowing position.

In the plowing operations, forces are exerted rearwardly and upwardly on the chisel, and when such forces overcome the force applied by the spring as in striking obstructions, or rocks and the like, the forward end of the shank and plate member will hinge downwardly against the tension of the spring so that the chisel can rise upwardly and move over the obstruction. Plowing forces normally hold the shank against the rear of the plate of the movable part, and when such forces are removed or the chisel removed from the ground, the shank at the rear of the movable part is supported by a stirrup or a loop that embraces the shank adjacent the pivot of the movable part. This loop or stirrup also provides a support for the shank against excessive rebound when the chisel passes over an obstruction. The shank is positively connected to the plate of the movable member only at the forward end of the plate and shank so that the shank can flex for substantially the full length thereof. The support by the loop or stirrup is such that the flexibility of the structure is retained. This flexing of the shank including the portion thereof under the plate portion rearwardly of the bolt and nut connection with said plate portion provides a distribution of stress that is an important feature in preventing damage to the plow structure. If the portion of the shank along the length of the plate portion was rigidly secured thereagainst for substantially the full length of said plate portion, or so held by the forces acting thereon, then the only flexing of the shank would be in that portion extending rearwardly from said plate portion of the movable member with the maximum shank bending stress being located immediately to the rear of said plate portion

and tending to break or cause a permanent set in the shank at that point. Graham in the 798 patent was the first to devise a mounting wherein the shank was positively held to a hinged plate at the upper forward end only and arranged so the shank could flex substantially the full length thereof by flexing or bending away from the plate. This is a bowing of the part of the shank between the bolt and nut at the forward plate portion and the rear end of the plate. This mounting was one wherein the flexing would not be limited by the shank being forced against the plate for the length thereof.

The structures involved in this suit are subjected to extreme shocks. Deere's expert, Mr. Fishleigh, admitted that the forces on the chisel tool could result in forces on the forward ends of the shanks up to 4,000 pounds or so (R. 409). The shock force from the chisel striking a rock applies a force that swings the upper forward end of the shank and plate member downwardly. It bends or flexes the portion of the shank that extends rearwardly from the plate member, but also it tends to flex the portion of the shank that is under the plate member so that it flexes downwardly away from the plate member. This action is shown in the sketches (Pls. Ex. R, S and T; R. 643-645-647). The particular flexing of the forward portion of the shank is shown in the dotted lines on the sketch (Pls. Ex. T; R. 647) as was explained by Graham's expert, Mr. Fenton (R. 570). This flexing was distinguished from that which would occur in the prior art structures (R. 572), an example of which is illustrated on the sketches (Pls. Ex. U, V and W; R. 649-651-653).

In the prior art the shock forces tended to bend the shank against the plate so that it tightened thereagainst preventing flexing in that area with the result that there was more stress in the area of the shank at the rear of the

plate member. In the 798 patent structure the forces tended to bend the shank away from the plate so it could flex in the area along the plate absorbing the shock. The force required for bending the shank away from the plate reduced the stress occurring at the rear of the plate member from that of the prior art structures. While this flexing of the 798 structure is small, it is effective in absorbing the tremendous shock loads and thereby reducing damage that would otherwise occur to the plow structures. This was a particular arrangement of structure that provided a flexing in a shank of chisel plow structures that was not possible with the prior art structures and thereby was a substantial advance in the art.

### D. The Respondents' Structures.

While the question of infringement of the 798 patent is not before this court, we believe reference should be made to respondent's structure and their engineer's statements relative thereto that recognize with the arrangement of the shank and plate there are better stress characteristics in operation (R. 113). While respondents give praise to the prior art, they still use the features of the Graham 798 patent, a copy of which they had before them. Deere's spring clamps were designed by their engineer and witness Hunter. He was given the assignment in the spring of 1953 and proceeded to investigate and consider different ways of providing a cushion spring mounting for the shank or standard (R. 94) but with all his engineering ability the clamp he designed, as shown in the drawings (Defs. Ex. 33 (a) and 33 (b); R. 877-879), was considered by Deere's own patent department as an infringement of the Graham 798 patent (Defs. Ex. 32; R. 847). Then the design was modified, the parts were

adapted to be cast instead of fabricated of steel plate, the modified design resulting in the Deere 650 clamp (Pls. Ex. I) which is also shown on a drawing (Defs. Ex. 41, R. 889). Hunter was asked if in that physical exhibit the action would be the same as that of the clamp shown in his original design (Defs. Ex. 33 (b); R. 879) and he stated, "It would be the same action, plowing action" (R. 105). He was then asked if it would be the same movement that would occur in the hinge member and the shank in the structure shown in the Graham 798 patent. His answer was, "Yes, that would be the same action" (R. 105).

Hunter designed the lighter clamp that resulted in the Deere 100 series clamp (Pls. Ex. J). There were drawings (Defs. Ex. 45 (a) and 45 (b); R. 895, 897) showing this second design which the Deere patent department advised would infringe the Graham 798 patent (Defs. Ex. 32; R. 871). Again there were some slight changes that did not change the function and when Mr. Hunter was asked if those minor changes altered the function or positioning of the shank in any manner, his answer was "No, those revisions were so made and the parts proportioned as to maintain the standard in its proper working position" (R. 110). Hunter was questioned as to why in defendant's structure he placed the shank below the hinge member rather than above and his answers were:

> "Q. Can you tell us the reason you place the standard or shank below the hinge member rather than above? A. The resultant forces, resultant loading of the standard into the clamp arrangement is upward and to the rear. By having the standard below the hinge member we are handling compressive forces rather than tensile forces in the members of the clamp.
>
> "Q. And that gives you a much better or more favorable stress arrangement for your standard than

you would have if you place the standard above the plate member of the hinge member? A. We feel that it does (R. 113)."

It is submitted that this shows that respondents recognized the desirability and advantage of the particular arrangement of the parts as shown in the Graham 798 patent. Even though they knew they were only making minor changes from the structure their patent department had considered an infringement of the Graham 798 patent and that the different structure operated substantially in the same way and provided the same result, they apparently felt that that structure was of such merit and desirability that they proceeded to market such structures with full knowledge that they might be called to account for the infringement. It is believed that this tribute by respondents adds support to our contention that the Graham 798 patent was a substantial advance in the art.

This is a case where respondents' Deere, by their engineer's testimony, say the structure is better than the prior art. The engineer had a patent library (R. 56, 95), also surveys of the structures being used in the field which included Graham's and Jeoffroy's (R. 93), and after careful study he made the infringing structure. In effect the respondents are saying, yes the Graham 798 structure is new, it is better. They want to use it, but the invention they infringe, because they covet it, is contended to not involve patentable invention. What is the significance of this coveting of a patented invention and then contending that the patent thereon is invalid? A patent is an incentive reward and is issued to protect for a limited time the originator of that which is new, which provided an advancement, a new or improved result, or effect, or function, or other advantages that the

prior art does not teach how to obtain. The protection is granted to prevent piracy by others for that limited time. The piracy or theft is called infringement of the patent granted, and regardless of the word, it is still stealing. The question arises, what is the reason for the stealing? Is it to derive an advantage? If there is no advantage, either real or imagined, no one steals. When a patent is issued and it is established that the patented subject matter is novel (none of the prior art showed a structure like that of the 798 patent), then by substantially conclusive evidence it is demonstrated that the novel subject matter produces an advantage, the progress (the better application of forces), is the very copying (infringement) by the infringer (Deere) while it is alleging lack of patentable invention as justification of the theft. The most conclusive proof of patentability is the infringement of that which is novel and, in fact, novelty coupled with infringement should be convincing that the invention also provided a progress, a betterment in the art that warrants the holding of the patent valid. The respondents plead the invention is not patentable, but the answer should be, if the prior art is just as good then use it or devise your own novel structure. Don't steal the patentees' and as justification cry there was nothing patentable in the invention appropriated, *Minnesota Mining & Mfg. Co.* v. *Shuger,* 132 F. Supp. 640 (D. Md., 1955); *Guiberson Corp.* v. *Equipment Engineers,* 225 F. 2d 431 (5 Cir., 1958); *Wyott Mfg. Co.* v. *Doran Coffee Roasting Co.,* 160 F. Supp. 644 (D. Col., 1958); *Kurtz* v. *Belle Hat Lining Co.,* 280 F. 277 (2 Cir., 1922).

This is an exceptional example of a case wherein, with full knowledge of the prior art and of the patent in suit, the respondent cast aside those structures that were avail-

able from the prior art because they coveted the advantages that resulted from the advance in the art provided by the Graham invention. They recognized the advance and paid tribute to it by the copying of the features of the 798 structure. *Diamond Rubber Company* v. *Consolidated Rubber Tire Company,* 220 U. S. 428, 441 (1911). This should be most conclusive evidence that the invention of the Graham 798 patent met the statutory requirements for a valid patent; that it was new, novel and it was not obvious at the time the invention was made to a person having ordinary skill in the art and that it represented progress in the art.

### E. The Prior Art.

In the trial court respondents urged prior patents and uses, and it was stipulated (Item 7; R. 15) that all of the alleged prior patents and prior uses were before the Court of Appeals for the Fifth Circuit in *Graham* v. *Cockshutt Farm Equipment,* 256 F. 2d 358, wherein the Graham 798 patent was held valid. Some of that prior art was not cited by the Patent Office during examination of the application which issued into the 798 patent, but the trial court in Finding XI (R. 27) found the noncited prior art was similar to some of the patents that had been relied upon by the Patent Office. While the Court of Appeals did not controvert that Finding, a few comments are herein presented in support of the Finding of the trial court. In the trial court the respondents relied upon a number of patents and prior devices as set forth in the trial court's memorandum opinion (R. 18-19). However, in their brief before the Court of Appeals respondents urged only the following patents and alleged prior uses:

*United States Patents.*

| *Patent* | *Date of Issue* | *Patentee* |
|---|---|---|
| 211,003 | December 17, 1878 | Dunbar (R. 745-749) |
| 284,278 | September 4, 1883 | Cobb (R. 755-757) |
| 287,965 | November 6, 1883 | Rix (R. 759-761) |
| 2,493,811 | January 10, 1950 | Graham (R. 717-726) |

*Foreign Patents.*

| | | |
|---|---|---|
| *Danish* | | |
| 57,391 | March 18, 1940 | Petersen (R. 727-733) |
| *Australian* | | |
| 111,910 | November 8, 1940 | Traeger (R. 735-741) |

Prior Uses:

Spring Clamp marketed by Jeoffroy Mfg., Inc., 1948. Designated Jeoffroy SC-580.

Spring Clamp sold by Glencoe Mfg. Co., Inc. Made and tested August, 1949. Offered for sale March, 1950. Sold and delivered May, 1950.

Of the prior patents, the Danish patent of Petersen, Australian patent of Traeger and the Graham 811 patent were all cited and, of course, considered by the Patent Office. The Jeoffroy SC-580 spring clamp was the one that was held to infringe the Graham 811 patent in *Jeoffroy Mfg.* v. *Graham* (5 Cir.), 206 F. 2d 772. It operated in substantially the same manner as the 811 structure and the minor differences did not change the fact that the Patent Office considered such a device in the Graham 811 patent which was cited by it.

The Dunbar Patent, No. 211,003 (R. 745) showed a harrow tooth and one end of a spring clamped together between two plates of a pivoted member mounted on top of a beam with the spring urging the plate portions

downwardly so the tooth would engage the rear of the beam. The tooth was adjustable for depth. A mere glance at the Dunbar drawings reveals that there is no real similarity between the structure thereof and that of the patent in suit. However, in this suit, respondents' expert, Fishleigh, indicated that seven mechanical elements were in various prior art devices and were found in the Dunbar structure (R. 266; 366-369). A comparison of the Dunbar structure with the patent in suit emphasizes that what may be said to be a combination of old elements may be a completely different structure from the prior combination and one that would successfully function where the prior combination would fail. Even a person having no skill in the agricultural art would readily see that the Dunbar structure, while it might scratch the ground, could not plow and withstand forces in the manner of the structure of the patent in suit.

The structures of the patents of Cobb and Rix and the prior use structure of Glencoe are similar to the Danish patent of Petersen which was cited and considered by the Patent Office. Each of these devices have a body portion mounting a pivoted member that includes a plate portion and the shank extends through a loop portion and engages a face of the plate. When each of these devices are used in cultivating or plowing by drawing the lower end of the shank or tool through the soil the resulting force acting on the shank tends to rotate or pivot the plate member. The force applied to the portion of the shank engaging the plate tends to hold that shank tight against the plate surface and actually opposes any flexing of the portion of the shank that extends along the length of the plate portion.

Respondents' expert, Fishleigh, admitted that the relative direction of such force in Glencoe was the same as

in the Graham 811, Petersen, Jeoffroy SC-580, Rix and also Cobb (R. 433). Fishleigh also admitted that this direction of forces relative to the shank and plate was opposite to the direction in the Graham 798 structure. The disclosures of Cobb, Rix, and the clamp of Glencoe being similar to Petersen, and incapable of providing the flexibility of the shank in the portion along the plate member as is obtained by the Graham 798 structure, makes it evident that the Patent Office did consider an example of such prior art and that, therefore, the presumption of validity of the Graham patent in suit is not weakened or destroyed.

This prior art demonstrates that throughout all of the years the Rix disclosure was available, over fifty years, no one, not even those with exceptional skill in the art, seeking to solve the problem of plowing in rocky areas, conceived of a structure wherein the shank would have flexibility for substantially the entire length thereof which includes the portion along the plate of the hinged member. The prior art shows they all followed the same concept. Glencoe, fifty years after Rix, mounted the shank and plate in a manner where the forces in plowing bent the shank in the part along the plate portion, against the plate to hold the same tight and eliminate flexing in that portion, an entirely opposite concept to that of Graham's in his 798 structure. These prior art structures and respondent's urging of them as teaching the patented structure, as well as the respondents' copying, should enforce the conclusion that the Graham 798 structure should be subject of a valid patent.

When the Graham 798 device is compared with the prior art, the comparison shows that it was different. None of the prior art had an arrangement like that of the patented structure and none provided the particular

flexing of the shank. It was new, it was novel, it solved the problem of chisel plowing in rocky areas, therefore it was also useful. The fact that none of those skilled in the art conceived of such a structure through all the years, is evidence that the structure was not obvious. Respondents' engineer admitted that it was a better structure. This betterment was an advance in the art and caused progress in that it was a concept of a mounting that provided a shank flexing that was not even suggested by any of the prior art.

### F. The Patent in Suit Meets the Statutory Requirements for Patentability.

A patent is presumed valid by statute, U. S. C. Title 35, Section 282. Also it is well established that that presumption of validity is a rebuttable one and is weakened if prior art is introduced that is more pertinent than that considered by the Patent Office. Defense attorneys can always find prior patents that are not of record in the Patent Office because it would be impractical for a patent examiner to cite each and every patent that might have a bearing on the invention. The patents cited by the Patent Office are selected examples of the prior art. The disclosure by a defendant of non-cited prior art that is merely cumulative, does not weaken the statutory presumption. *Otto* v. *Koppers Co.*, 246 F. 2d 789 at 801 (4 Cir., 1957). The trial court in Finding XI (R. 27) found that the statutory presumption of validity was not weakened or destroyed since the disclosures of the prior art not cited by the Patent Office "are similar to some of the patents relied upon by the Patent Office Examiner." The Court of Appeals did not controvert this finding.

The Court of Appeals in its decision recognized that there was a difference in the structural arrangement in

the 798 patented structure from that of the prior art. Also, it recognized that the 798 structure was perhaps more efficient so that the actual structure was new. The structure was useful because a large number of devices coming under the patent were sold by Jeoffroy, those devices being like the physical exhibits (Plaintiffs' Ex. C, D, and E). Since the structure was new and useful, it met the requirement of Section 101 of the statute. The trial court found that the particular arrangement of the elements disclosed by the 798 patent were not present in any single reference or as a whole (Finding XII; R. 28). All of the prior art brought forth by the defendants in this case was before the court in the Fifth Circuit when that court found the patent valid. *Graham* v. *Cockshutt Farm Equip.*, 5 Cir., 256 F. 2d 358 (Stipulation item 7; R. 15). There was no showing of any of the conditions under Section 102 of the statute that would prevent patentability of the invention and, therefore, the invention met the requirements for patentability and novelty of Section 102.

Was the device shown in the Graham patent No. 2,627,798 a solution to a problem? Was it useful? Was it new? There had been a problem of breakage of plows in a rocky territory and certainly the subject Graham patent was one solution. We do not contend that there might not be other solutions. Entirely different structures probably could be made that could solve the problem and such structures probably could have been devised by Deere's engineers if they had utilized some ingenuity instead of pirating the developments of Graham. Graham's patented structure was useful because it permitted plowing in such rocky country. The devices which came under the patent were admitted to be commercial successes. It did have some old elements but that does not defeat

patentability. *Entron of Maryland, Inc.* v. *Jerrold Electronic Corp.* (*supra*). The Graham patented structure was new. In all of the prior art wherein a chisel shank was mounted for pivotal movement, there was not one that had the arrangement, operation and action of the Graham structure. The Court of Appeals does not point out wherein any of the prior art would teach modifications of other prior art to form a structure such as the Graham patent. It apparently made up its mind as to invalidity when it saw the finding of the trial court that the patented structure provided an improved functional result and in absence of a finding of a new or different result.

As to the third requirement for patentability, as laid down in Section 103 of the statute; namely, relating to non-obvious subject matter, it should be again noted that all of the prior art brought forth in this case by the respondents Deere, including all of the prior patents and the prior devices relied upon by respondents, was before the District Court and the Appellate Court in *Graham* v. *Cockshutt*, 256 F. 2d 358, and the Graham 798 patent was held valid therein. Respondents relied heavily on the Glencoe device as an anticipation, but when they built the infringing devices they did not even consider Glencoe. They copied Graham. In asserting the defense of invalidity, the respondents herein praised the prior art which included the patents of Dunbar, Cobb, Rix and others that had been available to the industry for more than 50 years. Those patents, particularly Rix, showed that persons had been working on the problem for 50 years before Graham filed his patent application. But the prior art merely shows that no one had made or provided a spring clamp such as that of the Graham 798 structure. The respondents did not even attempt to show that they had used the prior art in arriving at their

structure. On the contrary, they followed Graham instead of the prior art (Defendants' Ex. 32; R. 844). To base an argument of obviousness on prior art in this case is to impute fifty years of stupidity to those skilled in the art, *Expanded Metal Co.* v. *Bradford,* 214 U. S. 366, 381 (1909).

In the prior art relied upon by the respondents Deere wherein a chisel shank was mounted for pivotal movement with a portion of the shank extending along a plate member of a hinged shank attaching member, and this included the Danish patent to Petersen, the Glencoe structure, the patents of Cobb and Rix, the arrangement was such that the forces in plowing or striking an object tended to force the shank against the face of the plate portion of said attaching member and to hold it tight thereagainst. In all of these prior art devices, even if there was any bending of the shank in that part lying along the plate, it tended to bend against the plate so that the engagement would resist and eliminate flexing in that portion of the shank. In the prior art, the bend of the shank was against the plate preventing the flexing, while in the 798 patent the shank would bend or bow away from the plate and the shank would flex for substantially the entire length thereof (Pls. Exs. T and W; R. 570-572; 647, 653).

Most of the prior devices had long been available and the recent clamp of Glencoe followed them using the same arrangement that restricted the shock absorbing flexing. It is apparent that no one had conceived that there could be increasing flexing, a flexing for substantially the full length of the shank and a flexing wherein the magnitude thereof would increase with the force applied and thereby resist damage to the structure. This increased flexing and shock absorption was a flexing of the shank relative to the plate portion of the attaching member that was new

and unobvious so that actually even with the so-called "test" or "standard" applied by the Court of Appeals of the Eighth Circuit, there was a new result and the patent should have been held valid. Of course, this was a new result in a portion of the structure, while the overall result was chisel plowing with a spring clamp that would permit the tool to rise up over an obstruction and then return into the ground for continued plowing.

The Court of Appeals also noted that the 798 patent claims did not mention the shank flex. This was the function or result that was not found in the claims or in the specification. There was no holding that the specification was insufficient to teach someone how to build the structure. Obviously, the drawings and specification would teach anyone how to build the structure, and when that is true of the disclosure, the patent has complied with the statute as to disclosure. There is no requirement in the statute that there be any detail or description as to every function or result that will or can be obtained. To suggest that in a patent fully disclosing the claimed structure, the absence of details of function or result in the specification or claims thereof is a proper ground for holding the patent invalid is clearly a basis that is not in accordance with the statute and that is completely contrary to the law.

In the past, many claims have been held improper because they were functional or claimed the result instead of the structure. *Halliburton Oil Well Cementing Co.* v. *Walker*, 329 U. S. 1 (1946); *Refrigeration Patents Corp.* v. *Stewart-Warner Corp.*, 159 F. 2d 972 (7 Cir., 1947); *Parker Appliance Co.* v. *Irvin W. Masters, Inc., et al.*, 94 F. Supp. 72, Aff. 193 F. 2d 180 (9 Cir., 1951). In the present case, the patentee has described the structure and claimed the structure and the Court of Appeals for the

Eighth Circuit has held the patent invalid because it did not do exactly what has been condemned through the years.

There was no finding by the Court of Appeals that any prior art device was like that of the patent. There was no finding that any of the prior art had the same action. There was no finding that the patented structure would not produce a better result or the same result in a more economical facile manner. There was only the finding of the Court of Appeals that there was an improper test used by the trial court; namely, that the trial court did not find any new result. The Court of Appeals disregarded the requirements of the statute that a patent disclose the structure. It disregarded the requirement that the claims specify the structure. It held that the failure of the specification and claims to spell out function and result was a fatal defect and, therefore, the patent was invalid. It is submitted that this is going to the ultimate of extremes to hold a patent invalid. It is submitted that the patent in suit meets the statutory test for patentability and that it should be held valid.

## CONCLUSION.

In conclusion we submit that it is important that all litigants have the questions of patent validity be uniformly determined according to law. It is important that the patent statutes be interpreted properly by this Court and that patentability be determined in accordance with the statues and not by some test or standard having requirements that are outside of the statute or that have been eliminated by the statute. It is, therefore, respectfully submitted that in this case this Court, by the exercise of its supervisory powers, should remove the conflict of decisions between the Fifth and Eighth Circuits and

establish unequivocably that a new result and prior judicial tests are not requirements for patentability under the statute.

It is respectfully submitted that the United States Court of Appeals for the Eighth Circuit erred in its arriving at decision in this case, by applying a test as to patentability that was contrary to the statute and that its decision should be reversed and that of the trial court reinstated.

Respectfully submitted,

CLAUDE A. FISHBURN,
ORVILLE O. GOLD,
*Counsel for Petitioners.*

February 26, 1965

FILE COPY

Office-Supreme Court
FILED
MAR 2 19
JOHN F. DAVIS, C

No. [redacted] 11

IN THE

# Supreme Court of the United States

OCTOBER TERM, 1964

WILLIAM T. GRAHAM AND GRAHAM PLOW INC.,
*Petitioners,*

v.

JOHN DEERE COMPANY OF KANSAS CITY,
AND DEERE & COMPANY,
*Respondents.*

## BRIEF AMICUS CURIAE IN SUPPORT OF 35 USC 103

E. ERNEST GOLDSTEIN
Professor of Law
University of Texas
Austin, Texas

ROBERT W. HAMILTON
(SAME ADDRESS)

*Of Counsel:*

PAGE KEETON
Dean, School of Law
University of Texas
Austin, Texas

PRINTED IN U.S.A. — BY DELARUE/TEXAS

## INDEX AND CONTENTS


| | Page |
|---|---|
| Index and Contents | i |
| Table of Authorities | ii |
| Constitutional provisions relied upon, Article 1, Section 8, clause 8 | iii |
| Statutory provision relied upon, 35 USC 101, 102 and 103 | iii |
| Rules Relied Upon FRCP Rule 52(a) | iv |
| Consent of the parties to the filing of this brief | v |
| 1. Interest of Amici and Importance of this case | 1 |
| 2. If the patent system is to function to induce investment of private capital in research, patents must protect the innovations of practical stature produced by ordinary men working with investors dollars | 3 |
| 3. Judicial decisions prior to 35 USC 103 were contradictory and incited Congressional enactment of § 103 | 5 |
| 4. Section 103 is not a codification of any prior law, but is an original expression of a unique requirement for patentability | 6 |
| 5. Section 103 provides a factual requirement for patentability subject to the operation of Rule 52(a) of the Rules of Civil Procedure | 7 |
| 6. Section 103, as it nakedly reads, is constitutional | 8 |
| 7. The Congressional Policy of 35 USC 103 is sound social policy | 9 |
| 8. This Court should find that the Congressional requirement of § 103 is law superseding all prior law | 10 |
| 9. Conclusion, and suggested action by the Court | 11 |
| Re appendix | 11 |
| Appendix A, The Vague Concept of "Invention" as Replaced by Sec. 103 of the 1952 Patent Act, by Judge Giles Rich.... | 1a |

## TABLE OF AUTHORITIES


| | PAGE |
|---|---|
| Cuno Engineering Corp. v. Automatic Devices Corp. (Supreme Court 1941) 314 US 84, 51 USPQ 272 | 6 |
| Hotchkiss v. Greenwood (Supreme Court 1850) 52 US 248 | 6 |
| Jungersen v. Ostby and Barton Company, et al, (Supreme Court 1949) 335 US 560, 80 USPQ 32 | 2 |
| Constitution, Art. 1, Sec. 8, Clause 8 | 4, 9 |
| Statutes | |
| 35 USC § 102 | 7, 9 |
| 35 USC § 103 | 2, 5, 6, 7, 8, 9, 10, 11, 12 |
| Federal Rules of Civil Procedure | |
| Rule 52(a) | 6, 7, 8, 11 |

## CONSTITUTIONAL PROVISION RELIED UPON

Article 1, Section 8, clause 8:

The Congress shall have Power . . .

To promote the progress of Science and useful Arts, by securing for limited times to authors and inventors the exclusive right to their respective writings and discoveries;

## STATUTORY PROVISIONS RELIED UPON

Title 35 USC

**§101 Inventions patentable**

Whoever invents or discovers any new and useful process, machine, manufacture, or composition of matter, or any new and useful improvement thereof, may obtain a patent therefor, subject to the conditions and requirements of this title.

**§102 Conditions for patentability; novelty and loss of right to patent**

A person shall be entitled to a patent unless — (a) the invention was known or used by others in this country, or patented or described in a printed publication in this or a foreign country, before the invention thereof by the applicant for patent . . . [such prior knowledge of others in § 103 being referred to as "prior art"].

**§103 Conditions for patentability; non-obvious subject matter**

A patent may not be obtained though the invention is not identically disclosed or described as set forth in section 102 of this title, if the differences between the subject matter sought to be patented and the prior art are such that the subject matter as a whole would have been obvious at the time the invention was made to a person having ordinary skill in the art to which said subject matter pertains. Patentability shall not be negatived by the manner in which the invention was made.

## RULES RELIED UPON

**Federal Rules of Civil Procedure**
**Rule 52 Finding by the Court**

(a) *Effect.* In all actions tried upon the facts without a jury or with an advisory jury, the court shall find the facts specially and state separately its conclusions of law thereon, and judgment shall be entered pursuant to Rule 58 . . . Findings of fact shall not be set aside unless clearly erroneous, and due regard shall be given to the opportunity of the trial court to judge the creditability of the witnesses.

## CONSENT OF THE PARTIES TO THE FILING OF THIS BRIEF

The undersigned orally requested of counsel for the parties to this case, their consent to the filing of this brief.

Their replies indicating that they have no objection to the filing of this brief are reproduced as the next two pages of this instrument.

Wherefore the undersigned asks that the Court accept this brief for filing, and give it due consideration.

CLAUDE A. FISHBURN AND ORVILLE O. GOLD
ATTORNEYS AND COUNSELLORS AT LAW
PATENT, TRADEMARK & COPYRIGHT CAUSES
SUITE 1217 COMMERCE TRUST BUILDING
KANSAS CITY, MO. 64106
CLAUDE A. FISHBURN
ORVILLE O. GOLD
TELEPHONE VICTOR 2-1588
MALCOLM A. LITMAN
AREA CODE 816

February 22, 1965

AIR MAIL
Professor Ernest Goldstein
University of Texas Law School
Austin, Texas

In re: No. 580 in the Supreme Court of the United States; William T. Graham and Graham Plow, Inc., Petitioners, vs. John Deere Company of Kansas City and Deere & Company, Respondents

Dear Professor Goldstein:

In behalf of the petitioners in the above cause, we hereby consent to your filing an amicus curiae brief in behalf of the University of Texas Law School.

Yours very truly,

FISHBURN & GOLD

By: /s/ CLAUDE A. FISHBURN

CAF/em

cc: Mr. S. Tom Morris
630 Amarillo Building
Amarillo, Texas 79101

LAW OFFICES
GIBSON, OCHSNER, HARLAN, KINNEY & MORRIS

W. W. GIBSON
ERWIN C. OCHSNER
JOE HARLAN
STERLING E. KINNEY
S. TOM MORRIS
JOHN E. MORRISON, JR.
HAROLD C. RECTOR
J. HADLEY EDGAR, JR.
JAMES M. HOUSE
WM. W. GIBSON, JR.
MAX R. SHERMAN
JAMES H. DOORES
JON T. ODEN

AMARILLO BUILDING, SUITE 630
AMARILLO, TEXAS 79101

February 23, 1965

TELEPHONE DRAKE 6-8201
P. O. BOX 1439
79105

Professor E. Ernest Goldstein
University of Texas School of Law
2500 Red River
Austin, Texas 78705

In re: No. 580 in the Supreme Court of the United States; William T. Graham and Graham Plow, Inc., Petitioners, vs. John Deere Company of Kansas City and Deere & Company, Respondents

Dear Professor Goldstein:

In behalf of the respondents in the above cause, we hereby consent to your filing an amicus curiae brief in the Supreme Court.

Yours very truly,

STM/fj
GIBSON, OCHSNER, HARLAN, KINNEY & MORRIS
By S. TOM MORRIS

cc: Mr. Orville O. Gold
Fishburn and Gold
Attorneys at Law
1217 Commerce Trust Building
Kansas City, Missouri 64106
Mr. Thomas E. Scofield
Scofield, Kokjer, Scofield & Lowe
1325 Rialto Building
Kansas City 6, Missouri

No. 580

In The

# Supreme Court of the United States

October Term, 1964

William T. Graham and Graham Plow Inc.,
*Petitioners,*

v.

John Deere Company of Kansas City,
and Deere & Company,
*Respondents.*

## BRIEF AMICUS CURIAE IN SUPPORT OF 35 USC 103

### 1. Interest of the Amici and Importance of this case

The undersigned have no interest, pecuniary or otherwise, in the results in this case. This brief is not presented in support of any result as to the particular patent-in-suit.

Neither the patent in suit nor the size of the market for the plows is important enough to justify outsiders such as the undersigned to write and file a brief *amicus curiae.*

Rather, this case incites the time, trouble and expense of an *amicus* brief,

(1) because some writings by some Justices of this Court and the opinion by the Court of Appeals in this case, appear

to put the practical operating life of the patent system at stake, and to put the whole socio-economic functioning of the entire patent system at issue; and

(2) because a review of the briefs heretofore filed in both this litigation and prior litigation of the same patent, make it clear that the parties have not fully exposed to the Courts, the socio-economic forces of the patent system or the legal role of Section 103 of Title 35 in those forces.

Further, the Courts of the United States have split dramatically for the dozen years since the Congress in 1952 enacted 35 USC 103 — the jugular vein of the entire patent system. Some courts have in practical effect repealed the entirety of Title 35 USC by their abuse of § 103 thereof.

For example: Leading up to the present case, the Court of Appeals for the Eighth Circuit had held some 22 consecutive patents invalid. And the Third Circuit record now stands at 32 *in*valid out of the last 33 before it, with only two dissents. In this Court we find that some Justices have found as a general rule unpatentable subject matter in the patent cases taken by this Court in the past quarter century.

So strong has been the judicial attack of some Courts upon the patent system as to bring Mr. Justice Jackson to observe:

> ". . . the only patent that is valid is one which this Court has not been able to get its hands on." *Jungersen* v. *Ostby and Barton Company* et al (Supreme Court 1949) 335 US 560, 80 USPQ 32 at 36.

Thus is the reason for this *amicus* brief made apparent — the major degree of *de facto* judicial repeal of the patent system to date raises the fear in us as students of anti-trust, constitutional and patent law, that such repeal might be rendered complete by this Court if this Court fails to uphold specifically and directly 35 U.S. 103.

In the case before the Court, there stands at issue the very life of the patent system as a socio-economic force.

That socio-economic force is as important as any issue ever to come before this Court.

The issue commands of the Court an understanding, perception and true craftsman's attention to the Court's expression of opinion — *the more importantly so if the patent is viewed as invalid* than if viewed as valid.

**2. If the patent system is to function to induce investment of private capital in research, patents must protect the innovations of practical stature produced by ordinary men working with investors dollars.**

Our nation's economy is built in large part upon the results of a vigorous and aggressive Research and Development effort (often called "R and D"). No individual inventive genius no matter how dedicated can finance the expenses of modern research. Finance of R and D must be induced from all sources — individual investors, banks and other lending agencies, corporate research budgets, etc.

Those R & D dollars **must** be recovered out of the results of the research and development investment, else no bank loan committee or business manager could afford the investment of capital in such expensive endeavor. Patent protection is an incentive to R & D investment.

Example: It is common for businesses to hire an ordinary graduate engineer or chemist, and pay his salary, his office space, his equipment and materials costs, and all other costs of his experiments and tests, while he tests each of thousands of chemicals and/or materials in hopes of finding one what will, let us say, kill the lamprey parasite that

nearly destroyed the entire fishing industry of the Great Lakes.

The chemicals he tests are all known poisons, but he must (1) learn the life cycle of the lamprey as an aid to testing when to apply his poison, (2) figure out which poisons will in proper time disintegrate so as not to build up a poison level in the lakes, (3) determine which poison to apply in natural surroundings and (4) calculate the concentrations thereof and (5) establish the techniques of applying it to rivers and streams, whereby the lamprey may be killed and game and food fish preserved.

In such an endeavor this ordinary man may spend $100,000, or $300,000 or more over several years, and come up with nothing; or he may spend such sums and come up with a concentration of a well known poison that is also well known for use in killing lake-dwelling rodents.

Query: Is his *discovery* (the Constitution's word) after dozens upon dozens of expensive trials and errors, of the right technique for use of this prior known poison in the control of the lamprey parasite, a "progress of the science and the useful arts" which the Constitution seeks to protect — even though by hindsight we can note the fact that the poison is well known for lake applications against rodents as proof that the invention has no stature?

If corporate R and D budgets are to continue to be justified, then inventions and discoveries of the stature that are produced by ordinary men spending ordinary research dollars *without flashes of genius,* must be protected by the patent law.

**3. Judicial decisions prior to 35 USC 103 were contradictory and incited Congressional enactment of § 103.**

Some judges, seemingly oblivious of the role of the patent system as an inducement of *capital investment* in R & D have taken the position that almost every patent before them is invalid for failure to meet the "strict" or "stringent requirements of invention required by the constitution" or required by the opinions of the Supreme Court.

For example, counting each judge's individual vote, we have 94 out of the last 99 judicial votes in the Third Circuit, to be for *in*validity.

While some flimsy patents were, no doubt, among those before the Court, we must also assume that there were many sound patents, and that the lawyers were taking many properly arguable cases to the Courts of Appeals while settling prior to appeal the totally unjustified cases.

By contrast other Courts (e.g. the Court of Appeals for the Tenth Circuit for the last seven years) have sustained over 70% of the patents before them as defining invention of patentable stature.

That this startling variance in performance should have continued for so many years raises doubts as to practical functioning of the judicial system. More importantly—

It renders clear the complete impossibility of any Court applying a law "standard of invention" subjectively, and points up the need for the factual requirement for patentability of Section 103. See the Appendix A hereto for a full explanation of why the subjective "standard of invention" is impossible of uniform understanding.

Prior to 1952 there was no statutory effort at a statement of what level or stature of invention was patentable. The

Courts played with that isue with as varied results as the statistics quoted above suggest.

Then the Congress acted, enacting 35 USC 103 to become effective January 1, 1953.

**4. Section 103 is not a codification of any prior law, but is an original expression of a unique requirement for patentability.**

Some writers to the contrary notwithstanding, it is *inherently impossible* that Section 103 codified exactly *any* prior decision that did not use the same words as the statute. For there are in our language no synonyms of 100% identical meaning.

True it must be, that the drafters who selected the words of Section 103 had some idea in mind, as one they wished to establish as a norm. Apparently they had in mind the opinion in *Hotchkiss* v. *Greenwood* (Supreme Court 1850) 52 US 248, but they were not following *Cuno Engineering Corp.* v. *Automatic Devices Corp.* (Supreme Court 1941) 314 US 84, 51 USPQ 272.

But whatever previous idea the drafters had in mind is of no consequence; the words used in Title 35 USC 103 are positive, clear and unequivocal in their statement of their own requirement — a unique requirement never before expressed in jurisprudence.

It is reasonable to assume that the drafters wanted something more than a highly subjective "standard of invention". It is more than likely that the drafters intended to establish a requirement for patentability that would serve as a basis for a finding of fact of patentability which would then be subject to the operation of Rule 52(a) of the Federal Rules

of Civil Procedure, thus narrowing the area of appellate review.

The pre1953 history is pertinent only to illuminate the factors impelling Congressional action.

No pre1953 opinion was stated to be codified so none were codified except to the extent consistent with the naked words of § 103 — and as to *that* the naked words of 103 must stand independently.

Fair treatment of the Congressional effort calls for the giving of full meaning to the words of § 103 without distortion by prior divergent judicial writings.

To do otherwise is to deny Congress the power to legislate along lines close to but different from prior precedents.

**5. Section 103 provides a factual requirement for patentability subject to the operation of Rule 52(a) of the Rules of Civil Procedure.**

The Constitutional word of interest is "discovery" — a word clearly connoting (as did also the 1789 word "invention" *not* used in the Constitution) a finding-out, whether or not others had previously found-out the same thing.

Congress has decided (35 USC 102) that however original an inventor's work, what he finds-out or discovers is not patentable if others had previously discovered or found-out the same thing.

Congress also decided as evidenced by the plain words of § 103, to assume that a mythical man of "ordinary skill" nevertheless knows the sum total of mankind's knowledge — the "prior art". On that assumption Congress said that whatever an inventor finds out or discovers is not patentable,

> "if the difference between the subject matter sought to be patented and the prior art are such that the subject matter as a whole would have been obvious at the time the invention was made to a person having ordinary skill in the art to which said subject matter pertains."

Whether a discovery is patentable is under Section 103 not related to any "standard of invention" as it was by prior case law, now patentability is determined solely by the measure "obvious to a person having ordinary skill in the art" after consideration of all the "prior art".

"Obviousness" is a fact.

It cannot be otherwise.

The judgments of the Patent Code's mythical ordinary man must be as subject to Rule 52(a) as those of the reasonably prudent man in negligence cases.

To say otherwise would be to distort what Congress determined to be the public policy, in correcting the prior widely variant court views.

**6. Section 103 as it nakedly reads, is constitutional.**

From the foregoing it is quite clear: The constitutional word "discovery" authorizes Congress if it so elects to protect every original "finding out" of any stature, whether or not previously known to others or obvious from what others have done.

The fact finding that this would promote the useful arts was properly and accurately made by the Constitutional Congress 175 years ago, and this fact is still true today.

The Congress's restriction of patent protection to only those discoveries not obvious to the man of ordinary skill

is clearly narrower than and within its Constitutional authority.

**7. The Congressional Policy of 35 USC 103 is sound social policy.**

Those things which are already known to and used or published by others are not patentable. 35 USC 102.

This is good social policy because: To permit a new inventor of devices already in the public domain to receive a patent right to preclude others from using that invention, is to permit one man *to take from* the public domain into his private domain.

Similarly, if you ask a man skilled in the art to produce a given new device, and he can do so almost immediately without major investment of research and development money, such a device is also in the *present public availability* and needs no incentive to produce it however new it is.

Such a device as the man of ordinary skill can, even though new, readily provide on request, is obvious to him and not patentable under 35 USC 103. And this too is sound social policy.

But if when requested to produce a given device, the man of skill in the art is unable to do so, but rather needs significant amounts of time, tests, experiments and money to produce it, then that device

(1) is *not presently* within the public availability or the public domain.

(2) is not obvious.

(3) *is* patentable under § 103.

But since that patentable device is not presently within the public availability, the granting of a patent right to preclude others from using it *takes nothing from* the public domain, but rather secures to the inventor for a limited time only *the new device given by him to the public for the first time.*

Thus the obviousness requirement of § 103 is seen to draw the line squarely upon the public policy line without special attention to the private right of the inventor.

The obviousness requirement secures the incentive-producing patent only as to devices not then enjoying ready public availability.

**8. This Court should find that the Congressional requirement of §103 is law superseding all prior law.**

As aforesaid judges following the legal "standard of invention" rule have produced erratic results, sometimes deleterious to the socio-economic incentives of the patent system.

The "standard of invention" rule leaves to Courts the socio-economic issue of what *should* be patentable whereas public good is better served if the judiciary determines what is patentable according to the standard established by Congress.

The only way to give Congress's effort a fair try is to try it — and encourage other courts to try to apply Section 103 as Congress wrote it, as a factual requirement of nonobviousness to the exclusion of any court-determined "standard of invention".

Any determination of the law as being other than as Congress wrote it, in this case is not only a distortion of ap-

parent Congressional intent, but also denies to Congress the power granted it by the Constitution to set a patent policy.

**9. Conclusion, and suggested action by the Court.**

Since a number of the courts the country over, including the Eighth Circuit Court of Appeals in this case, have distorted the requirement of nonobviousness into the pre-§ 103 court-made "flash of genius standard of invention", it is imperative that this Court bring order out of chaos by clearly announcing, without regard to the patent here in suit, that:

(1) There is no longer a "standard of invention" for patentability.

(2) 35 USC 103 is constitutional and clearly requires only subject matter not obvious to the man of ordinary skill in the art.

(3) All court language similar to but variant from the statute's requirement is verbiage not pertinent to the statute's test.

(4) That factual requirement of nonobvious subject matter, is an issue within the operation of Rule 52(a).

**Re Appendix**

The Honorable Giles Rich ranks as a preeminent authority in the field of patent law. He has been a teacher of law at the Columbia Law School and a distinguished practitioner of patent law for more than twenty-five years. Now he is a Judge of the Court of Customs and Patent Appeals.

Judge Rich has been a student of Section 103 from the time when he helped to draft it. On the bench he has had unequalled and extensive experience in applying Section 103 to varied and myriad situations.

In this specialized area of law and socio-economics, it is fortunate that there is available to this Court the views of Judge Rich written before this case came to this Court.

Accordingly we attach hereto as Appendix A, and respectfully urge detailed study and consideration of, "The Vague Concept of Invention as Replaced by Sec. 103 of the 1952 Patent Act", delivered by Judge Rich in June 1964 on the occasion of his accepting the Kettering Award from the Patent Trademark and Copyright Foundation of the George Washington University.

Respectfully,

E. Ernest Goldstein
Professor of Law
University of Texas
Austin, Texas

*Of Counsel:*

Page Keeton
Dean, School of Law
University of Texas
Austin, Texas

**CERTIFICATE OF SERVICE**

The undersigned hereby certifies that copies of the foregoing have been mailed regular first class mail to counsel for the parties Messrs. Claude A. Fishburn and Orville O. Gold, 1217 Commerce Trust Building, Kansas City 6, Missouri, Counsel for Petitioners, and Mr. S. Tom Morris, Gibson, Ochsner, Harlan Kinney & Morris, 630 Amarillo Building, Amarillo, Texas, Counsel for Respondents, and Mr. Thomas E. Scofield, 1325 Realto Building, Kansas City 6, Missouri.

.....

# APPENDIX A

## THE VAGUE CONCEPT OF "INVENTION" AS REPLACED BY SEC. 103 OF THE 1952 PATENT ACT

By Judge Giles Rich,

Court of Customs and Patent Appeals

---

A speech delivered in June 1964 upon the occasion of Judge Rich's receiving the Kettering Award of the Patent, Trademark and Copyright Foundation of the George Washington University.

# THE VAGUE CONCEPT OF "INVENTION" AS REPLACED BY SEC. 103 OF THE 1952 PATENT ACT

By GILES S. RICH *

I believe in incentive systems. Over 20 years ago a prize competition lured me into some intense study and writing[1] which, through a traceable chain of events, has led to my being here tonight.

I did not win the prize. Neither did the other contestants, save one.[2] But they all contributed something. That is the way incentive systems work. They bring out all kinds of efforts, excellent, good, mediocre, indifferent, and bad. But the *system* brings forth the effort. Society benefits from the good and mediocre, as well as the excellent, efforts. The bad efforts don't hurt it any. They may even prevent others from making mistakes if they are made known.

The patent and copyright laws create such incentive systems. The copyright laws provide an incentive which brings out the greatest works of literature as well as a lot of trash. The patent system works in a similar way. But you can't get cream without producing milk and, anyway, it is the milk that society lives on.

---

* Associate Judge, United States Court of Customs and Patent Appeals.

This article is the speech delivered by the author on June 18, 1964 in accepting the Kettering Award for 1963 from The Patent, Trademark, and Copyright Research Institute of The George Washington University. It was previously published in the Institute's publication "IDEA" Conference Number 1964, page 136.

In the present version the author has made a few minor corrections and revisions.

[1] The Linthicum Foundation Competition, 1941, Dean John H. Wigmore, Northwestern University Law School, Chairman. The writer's contribution was published in five installments in the Journal of the Patent Office Society, Vol. 24, pp. 85, 159, 241, 328, and 422, commencing Feb. 1942.

[2] The winner was Laurence I. Wood whose paper was published in book form, 1942, by Commerce Clearing House, Inc., under the title *Patents* and *Antitrust Law*. He is presently a vice president and general cousel of General Electric Company.

I don't suppose you will be surprised if I talk about the patent system. The aspect of it I will talk about is the one I think causes the most trouble, the clarification of which I therefore believe would do the most good.

As groundwork I will first state an axiomatic but too-little-thought-of principle. A monopoly merely gives rise to *power* which can be put to either good or bad uses. Hence, in the case of monopolies created by government grant, which is all patents are so far as the rights they create are concerned,[3] we have to distinguish between good and bad monopolies.

I will take two well-known examples from history. First, the bad monopoly. Queen Elizabeth granted to one Darcy, a member of her court, a monopoly of playing-cards for 21 years so that he could make some money. But playing-cards were old and well-known and others were making a living from making and selling them in England. This monopoly, which was by Royal Letters Patent, therefore took from

---

[3] Dean Wigmore, n. 1, in his foreword to the Wood book, n. e., said:

> * * * I take the opportunity to intrude my personal opinion, that neither Courts nor treatice-writers have been radical enough in defending the legitimacy of the "monopoly" in a patent, as distinquished from the ordinary trade-monopoly. Is it not a fact that every property-right we have a "monopoly"? The right to our house or our automobile is simply a right to keep anyone else from entering or using it without our consent; and is that not a monopoly?
>
> * * * *
>
> Of course patent-rights can be so *used* as to merit the distrust attaching to a monopoly, — by contracts fixing prices, by tying agreements, by pools and the like. But so can gold-mines and all the necessities of life by bargains be used monopolistically; yet no one blames the mine-owning right itself or the food-ownership right itself; the blame is directed to the use of it.
>
> And so I for one regard it as unfortunate that courts and treatise-writers have not stood up more boldly for the fundamental rightness of the patent right itself. I say "for one", because I do not recall reading anywhere an adequate defence of the theory of the patent-right.

the public a freedom in business which it had long enjoyed before the patent; and it was bad.[4]

In Venice in 1594 the Doge, on behalf of the government granted to the great Galileo a "privilege," which was the Venetian name for a patent, on a machine which he had *invented* "for raising water and irrigating land with small expense and great convenience," on the condition that it had never before been thought of or made by others. Galileo made a couple of significant remarks in his petition for the privilege. He said, "it not being fit that this invention, which is my own, discovered by me with great labor and expense, be made the common property of everyone;" and also, that if he were granted the privilege, "I shall the more attentively apply myself to new inventions for universal benefit." In short, he was not inclined to divulge his invention only to have it copied; but if the government would give him some reasonable protection he would not only divulge it and build it but might even apply himself to making some more inventions. Deeming this to be a *good* use to which to put a limited monopoly, the Council voted to grant him a "privilege" or patent of monopoly for 21 years.[5]

The Venetians were accustomed to doing this, having granted about 1600 "privileges" in the 15th and 16th centuries.[6]

In the 17th century the English, in 1624, enacted a statute[7] abolishing and prohibiting future monopolies of

---

[4] *Darcy* v. *Allin*, 11 Co. Rep. 846; I W. P. C. I. See *Monopolies and Patents* by Harold G. Fox, U. of Toronto Press, 1947, p. 318. The case also has the popular title "The Case of Monopolies."

[5] Journal of the Patent Office Society, Centennial Number, "History of the Patent Office," July 1936, Vol. 18, p. 23.

[6] Id. Most of the privileges were for copyrights but a small percentage were for inventions.

[7] The Statute of Monopolies, May 25, 1624, 21 Jac. I, c. 3. For its history see Fox, supra, n. 4, Chap. IX, pp. 113-126.

the bad Darcy sort and authorizing the continuing grant of Letters Patent for new inventions within the realm, a practice which has continue to this day.

The founding fathers came to America from the mother country, bringing with them knowledge of this practice of granting monopolies. In the nearly 150 years of the colonial period preceding the Federal Constitution, the colonies and then the States granted numerous patents for new inventions as well as monopolies to encourage the founding of new industries, including, as the English did, encouragement of setting up in America industries already practiced abroad.[8]

It is not surprising that, when it came to the writing of a Constitution, provision should be incorporated, with no controversy at all, for Congress to make laws for the granting of patents to inventors, or that George Washington should urge its speedy enactment, or that the very first Congress should enact our first Patent Act of 1790.[9]

Then began our patent system. One might describe it as a great experiment which goes on continuously, getting more complex all the time, in which this Institute is playing, for the first time, a vital role in finding out how the system as a whole actually works, as an aid to preserving its basic principles and saving the obvious good that is in it.

In this experiment, which involves a mixture of economics, law, technology, and psychology, we still have the centuries-old problem of monopoly power being utilized for socially good and socially bad ends and of deciding which is which.

---

[8] See JPOS, supra, n. 5, pp. 35-58.

[9] Id. pp. 55-62.

The greedy nature of some men is such that there are always pressures toward the creation of bad monopolies. Undue preoccupation with countering this pressure, however, has quite blurred the vision of many well-intentioned but not too well-informed people to the good uses monopoly can be put to and to the good that monopoly power can do, properly channeled and not so proscribed as to lose its effective power.

Paradoxically, in the working of the patent system, monopoly often promotes competition. Numerous instances are all around us, wherever two products serving the same general purpose have achieved, with the aid of patent protection, commercial production. And only after such production is there any possibility of market competition.

To this point I have taken note that the *primary* distinction between good and bad patent monopolies is that the good patent does not monopolize something the public *already has,* so as to take something away from the public. The invention covered by the good patent must be *new;* and so our statutes have always provided, though the provision was not always enforced.[10]

But beyond bare novelty one must go one further and troublesome step to have a sound system and keep the monopoly on the good side.

As we refrain from granting patents on inventions that are not new, we must also refrain from granting patents on those inventions which would arise *spontaneously,* given the need or the desire for them, as the yelp of the dog surely follows from stepping on his tail, or with *only a nominal expenditure of time, effort, money*

[10] Id. pp. 77-82, 230. Under the 1793 Act, for example, there was no examination for novelty over a period of 43 years. About 10,000 patents issued under that act for terms of 14 years, less than the number issued today in 3 months.

*or wit* — especially if the invention is one of real utility likely to meet with substantial or popular demand.

It was not long after the Patent Act of 1836 — in 1850 in fact — that the United States Supreme Court made this clear in the "doorknob case," *Hotchkiss* v. *Greenwood.*[11] What was involved was the trial judge's charge to a jury that if *no more ingenuity or skill was required* to construct the patented doorknob *than was possessed by an ordinary mechanic acquainted with the business,* then the patent was invalid.

The Supreme Court approved the charge. The opinion said: "In other words, the improvements is *the work of the skilled mechanic, not that of the inventor.*" (My emphasis.) The decision made clear that patents are not to be granted on inventions which are no more than what the ordinary mechanic acquainted with the business would produce as a matter of course in the pursuit of his calling. Such mechanics are *expected* to produce *new* things, such as were involved in that case, which was the attaching of an old clay doorknob to an old metal shank in precisely the same manner that metal doorknobs had been attached to such shanks before. Technically the assembly was *new,* but the court found novelty was not enough.

In referring to "mechanics" in this matter we can take them to be representative of a class — all those with *ordinary* skill in the various callings, ordinary shoemakers, ordinary chemists, electronic technicians of ordinary skill, etc.

Due to the reasoning of the case, that the new doorknob "was the work of the skillful mechanic, not that of the

[11] 52 U. S. 248.

inventor," what came out of it after 1850, and is still with us, was an injection into the law of what has ever since been called the "requirement for invention."

As is usual with a "doctrine" derived from a court opinion, the doctrine persists while the facts out of which it arose are forgotten. The opinion in the first case is quoted to the judge in a second and he does an opinion embroidering on it, his words being quoted in turn and reembroidered and so on.

I think the resulting situation with respect to the law on the "requirement for invention" was well summed up by Judge Learned Hand, who knew as much patent law as any judge ever has, at a Senate hearing in which your then Dean Colclough and I both participated in 1955, as follows:

> You could find nearly anything you liked if you went to the opinions. It was a subject on which judges loved to be rhetorical. * * * patent lawyers * * * like to quote all those things. There are lots of them.[12]

This proliferation of views on what did and did not amount to "invention" went on for 100 years. We were enlightened with the view that "invention" resulted from the exercise of the "inventive faculties" and other circular reasoning. Our standard text, Walker on Patents in its seventh or first Deller edition, said "An invention is the result of an inventive act."[13] Whole books on the patent law were written around such concepts. People collected the statements pro and con in volumes equally divided about in the middle — "invention" on one side, lack of it

---

[12] Hearings pursuant to S. Res. 92, 84th Cong., 1st Sess., on the American Patent System, Oct. 10-12, 1955, p. 113.

[13] Walker on Patents, First Deller Ed., Vol. 1, p. 110. The second Deller Ed. says the same thing in Vol. 2, § 103, as would be expected of any text undertaking to reflect what the courts have said.

on the other.[13a] Negative and positive tests for detecting its presence evolved. So did exceptions to each test. And patent lawyers selectively quoted all of this mass of material as though it proved something. Judges like Learned Hand found, in his words, that "They never seemed to tend toward enlightenment." [14]

This requirement finally evolved into a "*standard* of invention" which the courts pretended was being raised and lowered like an elevator as though it were something tangible. They also proclaimed in all seriousness — and are doing so this very moment — that this "standard" was to be found in the Constitution, where there are only two words on which it could possibly be predicated, the word "inventors" and the word "discoveries." [14a] You really have to be on the Supreme Court to find a "standard" there because the only way it can work is this: if you think the lower court was wrong in sustaining the patent, you proclaim that it applied too low a standard and reverse its decision,[15] saying "*That* was not an '*invention.*' "

Some judges got it fixed in their minds that if a thing is an "invention" then it is patentable and if it is not patentable then it is not an "invention," not realizing that the same things are invented over and over — by

---

[13a] For example, "Invention and the Law," by H. A. Toulmin, Jr., Prentice-Hall, Inc. 1936; Deller's Walker on Patents, 2d ed., § 126 "Cases involving Patentable Invention' and § 127 "Cases Not Involving Patentable Invention," pp. 328-402 consisting of citations only.

[14] Hearings, n. 12 supra, p. 113.

[14a] I am not unaware of the statement of the *objective* in Art. I, sec. 8, clause 8, "To promote the progress of * * * useful arts." See my "Principles of Patentability," 28 Geo. Wash. L. Rev. 393, 42 JPOS 75. When Congress exercised its power under that clause and set upon a patent system, so long as the *system as a whole* functions to further the Constitutional objective, it would not seem that the statement of the objective could set any "standard" for the patentability of any single invention.

[15] See *Great Atlantic & Pacific Tea Co.* v. *Supermarket Equipment Corp.*, 340 U. S. 147, 87 USPQ 303 (1950), where the two concurring opinions below were held to have applied a "standard of invention * * * that is less exacting than that required * * *."

the use of the inventive faculties or by inventive acts or what have you — and although clearly "inventions," their originators being as firmly convinced of it as was Galileo, they are not patentable for want of novelty. So it is customary for judges to approach all inventions gingerly in their opinions by referring to them as "alleged" or "supposed" inventions.

All an invention is, however, is something which has been found out, or devised, or discovered. The question today is not what to call it but whether, under the statute, it is patentable. Hundreds of "real" or "true" inventions, all resulting from "inventive acts" and the exercise of the "inventive faculties," are held unpatentable every day for lack of novelty.

The Patent Office, of course, proceeded on the same basis, and still does so to a dwindling extent, rejecting application for want of "invention" and granting them when it could be persuaded that "invention" was present. And through it all the patent lawyers and the judges persisted in telling all concerned that "invention" was something which could not be defined like God! Patent validity came as a matter of grace, from on high. This was a messy state of affairs. The surprising thing is it worked so well. But not well enough.

In 1941 a Commission, appointed by President Roosevelt, and headed by Charles F. Kettering,[16] came out with a report which said:

> One of the greatest technical weaknesses of the patent system is the lack of a definitive yardstick as to *what is invention.* To provide such a yardstick and to assure that the various courts of law and the Patent Office *shall use the same standards*, several changes

[16] For a note on who Kettering was and his prolific accomplishments in the fields of business, research and inventing, see "The Kettering Archives" by Eugene B. Jackson, 44 Jour. Pat. Office Soc. 331, May 1964.

> are suggested. It is proposed that Congress shall declare a national standard whereby [mark these words] *patentability* of *an* invention shall be determined by the objective test as to its advancement of the arts and sciences. [My emphasis.][17]

One apparent thought there was to stop talking about whether a thing is or is not an "invention," to take anything presented as *an* invention, and then to determine its *patentability* according to a standard which Congress was to declare, Congress never having said anything about it up to that time.

For some years nothing came of the Kettering Commission proposal but in the 79th, 80th, and 81st Congresses, from 1945 through 1949, identical bills were pending entitled, unfortunately but almost inevitably, "A bill to declare a national policy for determining invention." Now I have just said that the problem was not really to determine "invention," but to determine the *patentability of* inventions and this matter of language is one of major concern. Kettering got a hold on the distinction, but it keeps fading away like Alice's cat.

People don't think so much as they talk; and when they do think, they tend to think in words, at least about legal abstractions. Words are used to describe things, concepts, and experiences we have in common so that we can communicate. This thing, this concept, this experience every patent examiner, lawyer, and judge had come up against in practice was called the "requirement of invention," or just "invention" — the undefinable something or other that has to be there. This proves to be a cliché, meaningless though it is, that is hard to break away from. I taught for many years, and presumably

[17] Report of National Patent Planning Comm., June 18, 1943, H. Doc. 239, 78th Cong., pp. 6, 10.

my students learned, that the prerequisites to patentability were novelty, utility, and invention, and, of course the absence of a one-year statutory bar. There was nothing else *to* teach. Thinking and its concomitant words had not progressed beyond that point in the '30s and '40s. But today they have. Any current textbook and most cases, you will find, use the old terminology. But it isn't true any more and hasn't been for eleven and a half years — in my opinion, that is.

My not believing in ghosts or angels doesn't mean, *in law,* that there are no ghosts or angels, because if you think there are, and are frightened or informed by them, then they exist. As long as judges say there is a requirement for "invention," and many still do, then there is one. If you take a patent into court and the judge invalidates it for want of "invention" you *know* there is one. But why am I saying there is none? Am I talking theory or law; if law, then what kind of law? Or am I talking nonesense?

The outcome of those bills to determine invention, and one or two other bills, was that Congress got interested in revising and codifying the patent law and did so.[17a] In the new law (Title 35 U.S.C.) is a section, 103, described at the time by those who wrote it, at least in one place, as "incorporating a requirement for invention."[18] It was also described more carefully and accurately elsewhere[19] as providing a "*condition* which exists in our law and has existed for more than 100 years . . . by reason of decisions of the courts." (My emphasis.) And that "condition" is described in the title of this new section 103 as one for

---

[17a] See Giles S. Rich, "Congressional Intent — Or, Who Wrote the Patent Act of 1952?", in *Patent Procurement and Exploitation,* BNA 1963, pp. 61-78.

[18] House Report No. 1923, 82nd Cong., 2nd Sess., to accompany H. R. 7794, p. 5.

[19] Id. p. 7.

the existence of "non-obvious subject matter." The addition of section 103 was stated in the House Report on the bill[20] to be *one of the two major changes or innovations in the statute.*

What section 103 itself says is that what is patented must *not* have been *obvious* to one of *ordinary* skill *in the art involved,* at the *time* the invention was made. The parallel with what would be expected of the "ordinary mechanic acquainted with the business" in the "doorknob case" should be clear.

This is not a "standard of invention" and it is not called a "requirement of invention." The presence or absence of "invention" is not mentioned. The use of the term "invention" was, in fact, carefully avoided with a view to making a fresh start, free of all the divergent court opinion and rhetorical pronouncements about invention."[21] And in doing that it was contemplated, as the House report states,[22] that "This section should have a stabilizing effect and minimize great departures which have appeared in some cases."

As has been pointed out by P. J. Federico, one of the drafters of that section, in his Commentary,[23] what section 103 was gunning for was

> * * * some modification * * * in the direction of moderating the extreme degrees of strictness exhibited in a number of judicial opinions over the past dozen or so years; that is, that some change of attitude more favorable to patents is hoped for. This is indicated by the language used in section 103 as well as by the general

---

20 Id. p. 5.

21 The writer speaks from personal knowledge as one of the drafters.

22 Note 18, at p. 7.

23 "Commentary on the New Patent Act," by P. J. Federico, 1954, published in Vol. 1 of 35 U.S.C.A.

tenor of remarks of the Committees in the reports and particular comments.

The real vice or inadequacy of the judge-made require ment for "invention" was in the truism Mr. Federico also restated, "the so called standard of invention • • • is an unmeasurable quantity having different meanings for different persons." It left every judge practically scott-free to decide this often controlling factor according to his personal philosophy of what inventions *should* be patented, whether or not he had any competance to do so or any knowledge of the patent system as an operative socio-economic force. This was too great a freedom because it involves national policy which should be declared by Congress, not by individual judges or even groups of judges on multiple-judge courts. In section 103 Congress made such a policy declaration. It did not there declare what should constitute "invention." It was a statement of something *to take the place of* his vague concept. And it was made in the face of judicial declarations, promulgated in the *absence* of a statute, which Congress expressly desired to modify.

I would like to inject a new term into the language so we can discuss the matter rationally. I would like to call it the THIRD REQUIREMENT of patentability. The statute sets out all the requirements in as clear a form as is possible in a general statute — albeit that is a skeletonized form to which the courts must add the substance. Section 101 says inventions must be *new* and *useful*, requirement one and two; section 102 defines novelty; and section 103 lays down the *third requirement*. I repeat its clear-cut title:

*"Conditions for patentability; non-obvious subject matter."*

Upon examination in the Patent Office or upon adjudication in court, under the statute, when novelty, utility, and unobviousness as defined in section 103 are found to exist, and provided there is no one-year statutory bar, then there is *patentability* and *that is the end of the matter.* An examination for the presence or absence of "invention," or adherence to precedents on that muddy issue, is not called for and is not proper. It is a work of supererogation. It illustrates, furthermore, a failure to grasp the meaning of the statutory provisions. There is no such prerequisite in the statutory law.

When, as is the case with the "requirement for invention," the century's accumulation of judicial precedents range from A to Z and Congress, looking at the situation under the guiding light of Kettering's statement that *this is no yardstick and the greatest technical weakness of the patent system,* determines to make a yardstick and says the measure shall be "M", right in the middle of the alphabet, it behooves everyone concerned with administering that law to follow the measure "M" and to stop flitting about arbitrarily from A to Z lighting upon that letter which seems most appealing.

But what do we have today? A host of lawyers, examiners and judges all doing their level best to follow the law as Congress wrote it? Anything but that! What we have today is a mish-mash, and that is a nice old English term — older than the 1624 Statute of Monopolies. Why do we have a mish-mash?

First, a century of thinking and writing about a phenomenon in one set of nomenclature is a hard thing to overcome. Also a lot of people go on administering the patent laws and practicing under them without bothering to read the revision of them, so they are not aware that there has been a change.

Second, by hindsight it is apparent that those most intimately concerned with the writing and expounding of the new patent act in 1952, themselves brought up in the "requirement for invention" tradition (and I speak as one of them), did a very poor job of informing the public what it was they had done. One reason for that was that, on the average, their own comprehension of what they had done was not too clear. Remember, they were all of the school that "invention" *could not* be defined and there they were, trying to put a provision on that very subject into the statute. In going as far as seemed to be possible in that direction, they knew they were not making a *definition* but rather *a statement of policy, a specific required approach* to a difficult problem, which approach they thought would stop some of the nonsense derogatory of the patent system that had been going on. In pursuit of that objective, the drafters and Congress did at least one thing, by way of a statement of policy to counteract a judicial trend, which has had a clear-cut effect. Following a phrase casually dropped by the Supreme Court in *Cuno* v. *Automatic*,[24] in 1941, that "the new device, however useful it may be, must reveal the flash of creative genius," some courts took off on a quest for such a flash and, not finding it, invalidated patents. The last sentence of section 103 stopped this abruptly with the legislative command: "Patentability shall not be negatived by the manner in which the invention was made." But the judicial reaction to the first sentence,[25] in contrast, got to be all fouled up.

---

[24] *The Cuno Engineering Corp.* v. *The Automatic Devices Corp.*, 314 U. S. 84, 51 USPQ 272 (1941).

[25] § 103. *Conditions for patentability; non-obvious subject matter*

A patent may not be obtained though the invention is not identically disclosed or described as set forth in section 102 of this title, if the differences between the subject matter sought to be patented and the prior art are such that the subject matter as a whole would have been obvious at the time the invention was made to a person having oridnary skill in the art to which said subject matter pertains. Patentability shall not be negatived by the manner in which the invention was made.

Third, the members of the bar have a lot to answer for in creating and perpetuating the mish-mash because it is they who, desiring to make use of some of the extreme cases antedating the patent act to invalidate patents in litigation, played down section 103 and early in its life persuaded a number of courts that it made no change whatever but was "mere codification." [25a] They are now paying more attention to section 103 as they learn that it can help them when they are on the other side, but they are learning slowly and my generation of lawyers, at least, is still talking, out of habit, in terms of "invention." Just listen to them!

Find me a trial lawyer for an infringer who will not urge on the court, as the existing test for "invention," the views expressed by the Justices of the Supreme Court in *A & P* v. *Supermarket,* in 1950,[26] two years before the effective date of section 103, and I will joyfully transfer my Kettering Award to him. He would deserve it more than I do. I have no clients. Herein lies a grave defect in the development of sound law through adversary proceedings.

Fourth, in the legislature the mish-mash has been described in detail, up to 1957 (the first 5 years of the act), in Senate Committee Study No. 7. What is its title? "Efforts to Establish a Statutory Standard of Invention."[27] The Senate Patent Subcommittee is still striv-

---

[25a] A little reflection should show that when judicial precedents constituting the "law" range from the very liberal to the most strict, it is a patent absurdity to speak of a statute taking a middle ground as a "codification" of existing law. See note 17a, supra.

[26] Supra, n. 15, 340 U. S. 147. This was a case preeminetly in the minds of the drafters of the 1952 Patent Act, having been decided during the writing of the first drafts. See note 17a.

[27] Study of the Subcommittee on Patents, Trademarks and Copyrights of the Committee on the Judiciary, U. S. Senate, 85th Cong., 1st Sess., pursuant to S. Res. 95, Study No. 7 (1958).

ing to bring about a higher degree of uniformity in the courts in the various groups of the Patent Office, and between the two organizations, but in what terms does it do its own thinking? The subcommittee's annual Report (No. 107), April 3, 1963, is concerned about the "Patent Office 'standard of invention'" and refers to the development by that office of a "policy statement pertaining to standards of invention." The report for the next year (No. 1018), May 1, 1964, again refers to the need to eliminate differences within the Patent Office and between it and the courts "concerning the standard of invention." Meanwhile, apparently without the committee's knowledge, the Patent Office Academy has been teaching that there is no "standard of invention," that "invention" is meaningless, and that the prerequisite is as stated in section 103. Might it not do some good and help to achieve the uniformity the subcommittee so much desires if its own members, and staff, could convince themselves, in spite of what uninformed or misinformed judges have said, that the 1952 Patent Act was intended by their fellow legislators to *replace* the "standard of invention," which never was a standard, with a requirement of unobviousness to a particular kind of person at a particular time?

Amid the confusion, there are some encouraging signs in the courts. During the first few years after the 1952 act, many courts took the position that Congress really had done *nothing* in enacting section 103 and went about their old business of looking for "invention." Then in 1955 came Judge Learned Hand's *Lyon* v. *Bausch & Lomb*[28] opinion and in 1960 his *Reiner* v. *I. Leon*[29] opinion, both of which realistically appraised and appreciated what section 103 had done, namely, to restore the law

[28] *Lyon* v. *Bausch & Lomb Optical Co.*, 224 F. 2d 530, 106 USPQ 1 (2d Cir. 1955).

[29] *Reiner et al.* v. *I. Leon Co.*, 285 F. 2d 501, 128 USPQ 25 (2d Cir. 1960).

to what it had been 20 or 30 years earlier and, as he said, "to change the slow but steady drift of judicial decision that had been hostile to patents * * *." In the former opinion he remarked that "'invention' became perhaps the most baffling concept in the whole catalogue of judicial efforts to provide postulates for indefinitely varying occasions." In the latter he said "It is not for us [the judiciary] to decide what 'discoveries' shall 'promote the progress of sceince and the useful arts' sufficiently to grant any 'exclusive right' of [to?] inventors. Nor may we approach the interpretation of § 103 * * * with a predetermined bias." While saying "the test laid down [103] is indeed misty enough," he was able, with the evidence provided, to follow it. Certiorari was denied in both of these cases. In both cases the patents were sustained. The Supreme Court could easily have upset him had it wanted to. In fact, Judge Hand remarked to me and others at that Senate hearing in 1955[30] "Oh, they must take it," referring to *Bausch & Lomb*. Later during the hearing he testified,[31] "whether we were right in construing it [§ 103] as meaning that the old rules were to apply, remains to be seen. I hope the case will go up." From the viewpoint of the writers of the law, his *Bausch & Lomb* opinion was the first to comprehend their true intent. It has been allowed to stand.

Last April (1964) the Fourth Circuit Court of Appeals, which in 1954 said 103 merely codified the law, came to the conclusion in *Marvel* v. *Bell*,[32] after reading a number of cases which "have undertaken to comprehensively set forth the standard of invention to be used as a test," that

> When the mass of verbiage has been distilled, however, we have little more to guide us than the test which is incorporated in section 103 * * * .

[30] Supra, n. 12.
[31] Id. p. 120.
[32] 330 F. 2d 164, 141 USPQ 269.

and went in search of the "objective criteria of [un]obviousness." Perhaps, next time, that court will take the final step and *start* with the statute, ignoring the "mass of verbiage" it replaces. It seems a logical place to start, especially since it was intended to displace some of those cases in which the verbiage appears.

Last May (1964) the Sixth Circuit Court of Appeals, in *Monroe Auto Equipment Co.* v. *Heckethorn Mfg. Co.*,[33] said, "It is virtually a practical impossibility to define adequately the abstraction which we call invention,"[34] and then, in spit of that difficulty, said "we must have objective references and a place from which to start. For this we turn to the statute * * * § 103." A very good place to start! But then the court came to a very unncessary conclusion "that invention is synonymous with unobviousness. Thus to say that a device lacks invention and that it is obvious is to state the same legal proposition in two ways."[35] It

[33] 332 F. 2d 406, USPQ 553.

[34] The full quotation is (141 USPQ at 553):

> It is virtually a practical impossibility to define adequately that abstraction which we call invention. Long ago the Supreme Court said: "The truth is the word cannot be defined in such a manner as to afford any substantial aid in determining whether a particular device involves an exercise of the inventive faculty or not. In a given case we may be able to say that there is invention of a very high order. In another we can see that there is lacking that impalpable something which distinguishes invention from simple mechanical skill." McClain v. Ortmayer, 141 U. S. 419, 427 [Nov. 2, 1891]. This court consistently has echoed this view. [Cases cited.]

[35] A case was cited for this proposition, *In re Jacoby, Jr.*, 309 F. 2d 513, 135 USPQ 317, 50 CCPA 734, in which the opinion was written by the present author. The Patent Office Board of Appeals had said the claimed invention "must be unobvious and involve invention." In a footnote to a reluctant but needed quotation of that statement the writer said:

> To add to the statement that it must be unobvious, as required by 35 U. S. C., 103, the further statement that it must "involve invention" is merely to state the same legal proposition in two different ways. It would seem to suffice to state it once, and that preferably, in the words of the statute.
>
> It should be clear that this was intended to put the proposition, developed more forcefully in the present paper, as gently as possible and that it was *not* intended to suggest that "invention" and "unobviousness" as provided in section 103 are alternative *equivalents* for determining patentability, which they are not.

concluded that while obviousness "does not being to solve the problem," it "gives us a touchstone for the contextual meaning of invention." It also concluded that in a patent case decision is arrived at by three steps: a determination of what the prior art was, what the patentee has made, and whether it would have meen obvious, viewing the prior art from the time just prior to when the patented device was made. That is just what section 103 says! It is beginning to take hold and the next step will be to realize, what should be so clear, that when the unobviousness question has been determined, there is nothing more to do and the question of "invention" can be forgotten.[36]

---

[36] Along with it can be forgotten the "complexities" of another issue wrestled with by the court in deciding whether "unobviousness" is a question of law or fact. Compare *Armour & Co.* v. *Wilson & Co.*, 274 F. 2d 143, 124 USPQ 115 (7th Cir. 1960). The presence or absence of "invention" before 1953 was always, in my judgment, the determination of an issue of public policy — what inventions *should* be patented. As such it is a "question of law." This policy has now been legislatively expressed in section 103. In that section (note 25, supra) the following potential issues of fact appear: (1) what are the *differences* between "the invention" and "the prior art"? (2) What is disclosed by the prior art presumed to have been available to the inventor? (3) What was the level of ordinary skill in the art at the time the invention was made? (4) Other fact issues relating to *circumstances* indicative of the presence or absence of obviousness, traditionally taken into account in determining "invention," such as long-felt need, immediate copying, sudden displacement of existing practices or devices, difficulty of achievement, failure of others, etc. Once these *facts* have been assembled, there remains the ultimate statutory requirement of unobviousness, the third requirement for patentability, which becomes a matter of statutory *application* and as such must be a question of law. As the court concluded in the *Armour & Co.*, case supra. "The development of the factual content necessary to statutory construction is a question of fact." It may be *several* such questions, however. As the court did *not* conclude in *Armour & Co.*, after the fact issues are settled, the determination of unobviousness is necessarily a legal conclusion arising out of the facts, pursuant to the statute — a question of law.

The *Armour* case concluded (1960), in the separate opinion devoted to the fact or law question, that after the facts were settled, "We examine the *standard of invention* applied to these facts as a question of law." (My emphasis.) But under section 103 there is no "standard of invention." The directive of the statute is to determine whether the invention "would have been obvious" on he basis of the *differences*, the *ordinary* skill, and as of the *time* of invention. *These* are the factors, and these alone, by which courts are to determine the existence of the third requirement. Leastwise, that is what the statute provides.

I cite these as straws in the wind. A study in the Columbia Law Review in 1963[37] concludes that "nothing indicates that the courts are moving toward a common interpretation of the statute." I am not so sure. I say give them time. They are stirring like live cocoons. We have only had this statute for a dozen years and the judges who have been there that long, as many of them have, are still indoctrinated with the old "standard of invention" terminology they learned from the old patent lawyers and the old textbooks. There will be new editions of all three in due course.

I might mention the Court of Customs and Patent Appeals which has been turning out a consistent stream of opinions, for as least the eight consecutive years of which I have personal knowledge, strictly applying the obviousness formula of section 103 to determine *patentability,* not the presence of invention, and slowly but surely warping the Patent Office into basing its actions on the statute. The results are beginning to show in the actions and broad opinions we review. I believe our view has invaded the Patent Office Academy. The Patent Office Solicitor's office writes its briefs in the language of the statute.

Assistant Secretary of Commerce Hollomon made a speech in New York in March, 1964, in which he is reported to have said that he "believes that the courts and the Patent Office should both follow the same standard *of patentability.*" This would be nice but is obviously impossible until one or the other of them decides to standardize. A good place to being would be the Patent Office, a lot easier than in the courts. Dr. Hollomon further said "that a standard of *patentability* should be more definitely set forth." He is to be complimented on his terminology, in not talking about

---

[37] "The Standard of Patentability — Judicial Interpretation of Section 103 of the Patent Act," 63 Col. L. Rev. 306-325 (Feb. 1963).

a "standard of invention," but I think we should experiment with *using* the section 103 standard before we try to create another one. I find it very workable. It was a harder job to get it than he may imagine and in twelve years no better one has been proposed. The "criteria which may be worked out," referred to in the Revision Note to section 103, have never materialzed. I doubt they ever will.

I have had two practical suggestions in the back of my mind for some time. One is to have a sort of wall-paper border printed up to run around all the patent examiner's rooms on which the words NEW - USEFUL - UNOBVIOUS - PATENTABLE IF NO BAR are repeated endlessly. This could be designed into the proposed new Patent Office building. Most inscriptions on the present Patent Office are not very useful. They might also inscribe the Constitutional clause so people could see that it contains no *standard* for determining patentability.

The other suggestion — and this one is more serious — is based on the discovery that lecture courses are given for new and other Federal judges from time to time on how to be a judge, printed in books and given to the judges, compliments of the West Publishing Company. This Institute or some other disinterested party or organization should prepare a lecture on the basic elements of patent law in up-to-date terminology as used in Title 35 U. S. C. and see to it that the Federal judges get it. Even a glossary would help, in which it would appear that the "requirement for invention" became obsolete in 1953 by an act of Congress, along with many prior court opinions discussing it, being replaced by unobviousness as defined in 103 as the THIRD REQUIREMENT for patentability. By limiting the lecture to the terms of the statute and their clear meanings I do not see how the bar could object and many judges would be grateful.

I was recently discussing this subject with a young patent lawyer, urging that we should all stop talking about the "standard of invention." She said, "What difference does it make?" That is a fair question which has to be answered, and with my present answers I will end:

The differences it will make — the reasons why we *must* learn to make this change — are these, among others:

- Until we stop talking about a "requirement for invention," it will never be clear that THE THIRD REQUIREMENT is that stated in section 103 *and no other;* that when 103 has been complied with, there is no further and different requirement called "invention"; that compliance with 103 is the policy judgment of Congress on how to bring the invention within the Constitutional purpose.

- Because looking for the presence of "invention" in addition to compliance with 103 defeats the legislative purpose.

- Because talking about both unobviousness and "invention" as different things leads to weird and confused thinking.

- Because testing patentability by the presence of "invention" gives judges and the Patent Office too much freedom to decide patentability of new and useful inventions on the basis of a personal view as to what *should* be patentable, instead of accepting the view of the legislature on that question of national policy.

- Because it will get all those concerned with the administration of the patent system — Patent Office, Courts, and the bar — speaking the same language, a sine qua non to the communication of intelligence.

- Because you cannot use "invention" as both an abstract noun and a concrete noun in the same statute or opinion without confusion. The invention is the thing that has been produced by the "inventor." There will be muddy thought as long as one has to say: this invention (in the concrete sense) is unpatentable because it is not an invention (in the abstract sense).
- Because it will do more than anything else I can think of to bring about that long-sought-for greater uniformity of opinion on patentability.
- Because it makes the prerequisities to patentability intelligible.

As I hope I have been.

To quote Learned Hand — that well-named judge — once more, maybe I am only "shoveling smoke." Time alone will tell.

FILE COPY

FILED
MAR 3 1965
JOHN F. DAVIS, CLE

No. [redacted] 11

IN THE

# Supreme Court of the United States

OCTOBER TERM, 1964

---

WILLIAM T. GRAHAM and GRAHAM PLOW, INC.,
*Petitioners,*

v.

JOHN DEERE COMPANY OF KANSAS CITY and
DEERE & COMPANY, *Respondents*

---

**On Writ of Certiorari to the United States Court of Appeals for the Eighth Circuit**

---

## BRIEF ON BEHALF OF AMERICAN BAR ASSOCIATION, AMICUS CURIAE

---

ROGER ROBB
1100 Tower Building
Washington, D. C. 20005
*Counsel for*
*American Bar Association,*
*Amicus Curiae*

March, 1965

PRESS OF BYRON S. ADAMS, WASHINGTON, D. C.

## INDEX


Page

The interest of the amicus curiae ..... 1

Summary of Argument ..... 2

Argument ..... 4

I. The interpretation of Section 103 of The Patent Act of 1952 ..... 4

II. Section 103 is consistent with the Constitution 15

Conclusion ..... 18


## CITATIONS


CASES:

*Aro Manufacturing Co.* v. *Convertible Top Replacement Co.*, 377 U.S. 476 (1964) ..... 3, 8

*Berman* v. *Parker*, 348 U.S. 26, 32 (1954) ..... 18

*Blish, Mize and Silliman Hardware Co.* v. *Time Saver Tools*, 236 F. 2d, 913, 914-915 (CCA 10, 1956) ... 8

*Bobertz* v. *General Motors Corporation*, 228 F. 2d 94, 99 (GCA 6, 1955) cert. den. 352 U.S. 824 ..... 5

*Caldwell* v. *Kirk Manufacturing Co.*, 269 F. 2d 506, 510 (CCA 8, 1959) cert. den. 361 U.S. 915 ..... 5

*Cuno Engineering Corp.* v. *Automatic Devices Corp.*, 314 U.S. 84 (1941) .....2, 4, 5, 7

*Great A. & P. Tea Co.* v. *Supermarket Equipment Corp.*, 340 U.S. 147 (1950) .....2, 4, 5

*Hotchkiss* v. *Greenwood*, 11 How. 248 (1850) ....2, 5, 7, 9, 15, 18

*Interstate Rubber Products Corp.* v. *Radiator Specialty Co.*, 214 F. 2d 546, 549 (CCA 4, 1954) ..... 5

*John Blue Company* v. *Dempster Mill Mfg. Co.*, 275 F. 2d 668, 671 (CCA 8, 1960) ..... 5

*Lyon* v. *Bausch & Lomb Optical Co.*, 224 F. 2d 530 (CCA 2, 1955), cert. den., 350 U.S. 911 .....3, 5, 6, 7, 10, 18

*Mercoid* v. *Mid-Continent Investment Co.*, 320 U.S. 661 (1944) and 377 U.S. 492, 12 L. Ed. 2d 472 ..... 3, 8

*New Wrinkle, Inc.* v. *Watson*, 92 U.S. App. D.C. 137, 138 n. 6, 206 F. 2d 421, 422 (CCA D.C. 1953) .... 11

Page

*Old Dominion Land Co.* v. *United States,* 269 U.S. 55, 66 (1925) ..... 18
*Pacific Contact Laboratories* v. *Solex Laboratories,* 209 F. 2d 529 (CCA 9, 1954) ..... 8
*Plax Corporation* v. *Precision Exturders,* 239 F. 2d 792 (CGA 3, 1957) ..... 8
*Reiner* v. *I. Leon Co.,* 285 F. 2d 501 (CCA 2, 1960) cert. den., 366 U.S. 929 .....3, 5, 6, 7, 18
*R. M. Palmer Co.* v. *Luden's Inc.,* 236 F. 2d 496 (CCA 3, 1956) ..... 8
*United States ex rel. T.V.A.* v. *Welch,* 327 U.S. 546, 552 (1946) ..... 18
*United States* v. *Twin City Power Co.,* 350 U.S. 222, 224A (1956) ..... 18
*Wasserman* v. *Burgess & Blacher Co.,* 217 F. 2d 402, 404 (CCA 1, 1954) ..... 5

CONSTITUTION OF THE UNITED STATES:

Art. 1, Section 8, Clause 8 .....4, 15

STATUTES:

Patent Act of April 10, 1790, 1 Stat. 109 .....4, 16, 17
Copyright Act of 1790, 1 Stat. 124 ..... 16
Patent Act of February 21, 1793, 1 Stat. 318 .....16, 17
Patent Act of 1794, 1 Stat. 393 ..... 16
Patent Act of July 4, 1836, 5 Stat. 117 .....16, 17
Act of June 22, 1874, R.S. Sec. 4886 ..... 17
Act of July 19, 1952, c. 950, 66 Stat. 792, United States Code, Title 35 Sec. 103, 271 .....2, 4, 8

MISCELLANEOUS:

*Commentary on The New Patent Act,* 35 U.S.C.A., preceding Sec. 1 ..... 10
98 Cong. Rec. 9451, 82d Cong., 2d Session, 1952, July 4, 1952 ..... 13
Crumpacker, *The Patent Act of 1952—A Congressional Perspective,* published in Proceedings, Section of Patent, Trademark and Copyright Law, American Bar Association, San Francisco, Cal., Aug. 3-9, 1962, pp. 141-148 ..... 13
DeWolf, *An Outline of Copyright Law,* 15 (1925) ... 15

Page

Dr. Samuel Johnson's *English Language Dictinary* (1st Amer. ed. 1818) ..... 16

Flemming, *The Origin of The Patent and Copyright Clause of the Constitution,* 17 Georgetown L.J. 109 (1929) ..... 15

*Foreword to Study of The Subcommittee on Patents, Trademarks, Copyrights*—Committee on the Judiciary, Pursuant to S.Res. 55, 85th Congress, 1st Session, Study No. 7—*Efforts to Establish a Statutory Standard of Invention* ..... 9

Lutz, *Patents and Science—A Clarification of The Patent Clause of the U.S. Constitution,* 18 George Washington L. R. 50 (1949) ..... 15

Rich, *Congressional Intent—or, Who Wrote the Patent Act of 1952,* published at pages 61-78 of Patent Procurement and Exploitation (1963), BNA, Inc., Washington, Library of Congress Catalogue Number 63-17943 ..... 9

Rich, *The Principles of Patentability,* 28 George Washington L. R. 405 (1960) 42 J. Pat. Off. Soc'y., No. 2, Feb. 1960, 75, 88, 89 ..... 9

Senate Report No. 1979, June 27, 1952, 82nd Congress, Second Session. 2 U.S. Cong. News, 1952, 82nd Cong., Second Session at pages 2394-2428 ..... 6

*The Standard of Patentability—Judicial Interpretation of Section 103 of The Patent Act,* 63 Col. L.R. 306 (1963) ..... 2

IN THE

# Supreme Court of the United States

OCTOBER TERM, 1964

---

No. 580

---

WILLIAM T. GRAHAM and GRAHAM PLOW, INC.,
*Petitioners,*

v.

JOHN DEERE COMPANY OF KANSAS CITY and
DEERE & COMPANY, *Respondents*

---

**On Writ of Certiorari to the United States Court of Appeals for the Eighth Circuit**

---

## BRIEF ON BEHALF OF AMERICAN BAR ASSOCIATION, AMICUS CURIAE

---

### THE INTEREST OF THE AMICUS CURIAE

This case involves the interpretation of Section 103 of the Patent Act of 1952, Title 35, United States Code, Act of July 19, 1952, c. 950, 66 Stat. 792. Section 103 was a new provision in the patent statutes

and has never before been construed by this Court. Specifically, the case presents the question, whether the legislative standard of patentability established by Section 103 superseded whatever standard may be gleaned from the decisions of this Court in *Great A. & P. Tea Co.* v. *Supermarket Equipment Corp.*, 340 U.S. 147 (1950) and *Cuno Engineering Corp.* v. *Automatic Devices Corp.*, 314 U.S. 84 (1941), and from the subsequent decisions of various Circuit Courts of Appeals in other cases. There has been confusion and disagreement among the several Courts of Appeals with respect to the question, that is, with respect to the interpretation of Section 103 and its relation to prior case law.[1] A definitive and proper resolution of the problems thus created is of great and obvious interest and importance to the public and to the Bar.

This brief is filed with the consent of the parties, and pursuant to authority of the Board of Governors of the American Bar Association.

The Amicus Curiae, of course, has no interest in the outcome of the controversy between the parties, and intimates no views in that connection.

## SUMMARY OF ARGUMENT

By Section 103 of the Patent Act of 1952, 35 U.S.C. 103, Congress established a standard of patentability substantially in the language of *Hotchkiss* v. *Greenwood*, 11 How. 248 (1850). The standard thus established was the unobviousness of the invention, at the time it was made, to one having ordinary skill in the

---

[1] See *The Standard of Patentability—Judicial Interpretation of Section 103 of The Patent Act*, 63 Col. L.R. 306 (1963).

art to which the invention pertained. By writing this standard into the statute Congress in effect overruled any more exacting test supposedly to be found in certain recent judicial decisions, and reinstated the law of *Hotchkiss* v. *Greenwood.* Judge Learned Hand reached this conclusion in *Lyon* v. *Bausch & Lomb Optical Co.,* 224 F. 2d 530 (CCA 2, 1955), *cert. den.,* 350 U.S. 911, and *Reiner* v. I. Leon Co., 285 F. 2d 501 (CCA 2, 1960), *cert. den.,* 366 U.S. 929. His reasoning and conclusion were sound and should be approved by this Court. The theory that the Patent Act of 1952 made no change in existing case law does not withstand analysis. It is contradicted by one of the expressed purposes of the Act, which was to "revise" the patent laws. It is negatived by statements in the reports of the Congressional committees responsible for the Act. Indeed, this Court, in considering an analogous problem relative to Section 271 of the Act, held in *Aro Manufacturing Co. v. Convertible Top Replacement Co.,* 377 U.S. 476 (1964) that Section 271 reinstated the law of contributory infringement as it was prior to the *Mercoid* case, 320 U.S. 661 (1944), and that the statute thus in effect overruled the *Mercoid* decision. The interpretation placed on Section 103 by Judge Hand is further confirmed by authoritative commentators, including members of Congress and those who took leading roles in the drafting of the Act. Brief colloquies on the Senate floor, sometimes cited as evidence to the contrary, have no value as clues to the proper interpretation of the Act.

Section 103 of the Act is a reasonable and proper exercise by Congress of its Constitutional power to promote the progress of the useful arts by authorizing the grant of patents. In this connection, it should

be noted that a proper construction of Article I, Section 8, Clause 8 of the Constitution is that the power of Congress "to promote the progress of science" relates to copyrights. The word "science" as used in Clause 8 means general "knowledge". The power "to promote the progress of * * * useful arts" relates to patents. The two separate and distinct provisions are combined in the "balanced sentence" of Clause 8. In any event, the Patent Act of 1952 was an expression of legislative judgment as to what would best promote the Constitutional objective. It was a reasonable judgment, of the same type that Congress has made in this field since the first Patent Act of 1790. The role of the judiciary in reviewing such a legislative judgment is a narrow one in any case. In this case the legislative judgment should be conclusive.

## ARGUMENT

### The Interpretation of Section 103 of The Patent Act of 1952

The Amicus Curiae submits that Section 103 of the Patent Act of 1952, 35 U.S.C. 103, was intended to establish, and did establish, a definitive standard of patentability; and that Section 103 modified the "exacting standard" which the Circuit Court of Appeals for the Eighth Circuit in this case (333 F. 2d 534) found "implicit in the teachings" of *Cuno Engineering Corporation* v. *Automatic Devices Corp.*, 314 U.S. 84 (1941) and *Great A. & P. Tea Co.* v. *Supermarket Equipment Corp.*, 340 U.S.. 147 (1950).

In the case at bar and in previous decisions the Circuit Court of Appeals for the Eighth Circuit has consistently taken the position that Section 103 of the Patent Act embodies the standard of patentability set out by this Court in the *A. & P.* and *Cuno* decisions.

*John Blue Company* v. *Dempster Mill Mfg. Co.*, 275 F. 2d 668, 671 (CCA 8, 1960); *Caldwell* v. *Kirk Manufacturing Co.*, 269 F. 2d 506, 510 (CCA 8, 1959), *cert. den.* 361 U.S. 915. Other Circuit Courts of Appeals have stated that Section 103 merely "codified" existing case law. *Wesserman* v. *Burgess & Blacher Co.*, 217 F. 2d 402, 404 (CCA 1, 1954); *Interstate Rubber Products Corp.* v. *Radiator Speciality Co.*, 214 F. 2d 546, 549 (CCA 4, 1954); *Bobertz* v. *General Motors Corporation*, 228 F. 2d 94, 99 (CCA 6, 1955), *cert. den.* 352 U.S. 824. As a corollary it has been assumed by these Courts that the law which was codified was the law as laid down in the *Cuno* and *A. & P.* decisions. On the whole it is fair to say that courts adopting these views have disposed of the matter somewhat summarily, without extended discussion or analysis.

To the contrary, the Circuit Court of Appeals for the Second Circuit, in two penetrating opinions by Judge Learned Hand, has held that Section 103 of the Patent Act embodied the "definition of invention" announced by this Court in 1850, in *Hotchkiss* v. *Greenwood*, 11 How. 248, and that the standard of Section 103 has thus been substituted for the "stricter test" found in more recent opinions of this and other courts. *Lyon* v. *Bausch & Lomb Optical Co.*, 224 F. 2d 530 (CCA 2, 1955), *cert. den.* 350 U.S. 911; *Reiner* v. *I. Leon Co.*, 285 F. 2d 501 (CCA 2, 1960), *cert. den.* 366 U.S. 929. Judge Hand's reasoning was that in *Hotchkiss* v. *Greenwood* this Court "imposed an authoritative gloss upon the word [invention] which it put in the following words: 'unless more ingenuity and skill in applying the old method' were necessary 'than were possessed by an ordinary mechanic acquainted with the business, there was an absence of that degree of skill and ingenuity which constitute

essential elements of every invention. * * *' "; that "§ 103 only restores the original gloss, substantially in ipsissimis verbis'"[2]; and that the conclusion is inescapable that "Congress deliberately meant to restore the old definition, and to raise it from a judicial gloss to a statutory command."[3] As Judge Hand observed in his *Bausch & Lomb* opinion, 224 F. 2d 530, 537, "Certainly a legislature, whose will the courts have undertaken to proliferate, must be free to reinstate the courts' initial interpretation, even though it may have been obscured by a series of later comments whose upshot is at best hazy."

We submit that Judge Hand's reasoning and conclusion are entirely sound. The theory, that thePatent Act of 1952 made no change in existing case law, does not withstand analysis.

The Senate report to accompany H.R. 7794,[4] the bill which became the Patent Act of 1952, stated that the "purpose of the proposed legislation is to *revise* and codify the laws relating to patents"[5] (emphasis supplied). With respect to the "requirement for invention" in Section 103, which the report described as one of the "major changes or innovations in the title",[6] the Report stated:[7]

---

[2] *Lyon* v. *Bausch & Lomb Optical Co.*, 224 F.2d 530, 535, 536.

[3] *Reiner* v. *I. Leon Co.*, 285 F.2d 501, 503.

[4] Senate Report No. 1979, June 27, 1952, 82nd Congress, Second Session. The House Report (House Report No. 1923, May 12, 1952) was substantially the same. The Senate Report may be found in 2 U.S. Cong. News, 1952, 82nd Cong., Second Session, at pages 2394-2428.

[5] 2 U.S. Cong. News, 1952, 82nd Cong. Second Session at 2394.

[6] 2 U.S. Cong. News, 1952, *supra*, n. 4 at 2397.

[7] 2 U.S. Cong. News, 1952, *supra*, n. 4, at 2399 and 2400.

"Section 103, for the first time in our statute, provides a condition which exists in the law and *has existed for more than 100 years,* but only by reason of decisions of the courts. An invention which has been made, and which is new in the sense that the same thing has not been made before, may still not be patentable if the difference between the new thing and what was known before is not considered sufficiently great to warrant a patent. That has been expressed in a large variety of ways in decisions of the courts and in writings. Section 103 states this requirement in the title. It refers to the difference between the subject matter sought to be patented and the prior art, meaning what was known before as described in Section 102. If this difference is such that the subject matter as a whole would have been obvious at the time to a person skilled in the art, then the subject matter cannot be patented.

"That provision *paraphrases language which has often been used in decisions of the courts,* and the section is added to the statute for uniformity and definiteness. This section should have a stabilizing effect and *minimize great departures which have appeared in some cases.*" (Emphasis added)

As Judge Hand emphasized in his *Bausch & Lomb* and *Leon Co.* opinions, the language paraphrased was that of this Court in *Hotchkiss* v. *Greenwood.* And as he also pointed out in the *Bausch & Lomb* decision, 224 F. 2d at 536, the case "which in expression probably was the furthest departure" was *Cuno Engineering Corp.* v. *Automotive Devices Corp.,* 314 U.S. 84 (1941). There can be little doubt that the *Cuno* case was among the "great departures" to which the report referred.

Moreover, the "Revision Notes", which are a part of the Senate report, make it plain that the second

sentence of Section 103 legislates away the "flash of genius" test of patentability thought by many to have been laid down in the *Cuno* opinion, and applied in some later decisions of lower courts. The notes state:[8]

> The second sentence states that patentability as to this requirement [for non-obvious subject matter] is not to be negatived by the manner in which the invention was made, that is, *it is immaterial whether it resulted from long toil and experimentation or from a flash of genius.* (Emphasis added)

It has been held by Circuit Courts of Appeals that to this extent at least—that is, by negating the "flash of genius" criterion—Section 103 did modify or revise current judicial doctrine. *Pacific Contact Laboratories* v. *Solex Laboratories,* 209 F. 2d 529 (CCA 9, 1954); *R. M. Palmer Co.* v. *Luden's, Inc.,* 236 F. 2d 496 (CCA 3, 1956); *Plax Corporation* v. *Precision Extruders,* 239 F. 2d 792 (CCA 3, 1957); see *Blish, Mize and Silliman Hardware Co.* v. *Time Saver Tools,* 236 F. 2d, 913, 914-915 (CCA 10, 1956).

Confirmation for the view of Judge Hand, that Section 103 codified the case law as it existed prior to recent "departures" in judicial opinions, is found in *Aro Manufacturing Co.* v. *Convertible Top Replacement Co.,* 377 U.S. 476 (1964). The Court in that case considered a question analogous to that involved here, namely, whether Section 271 of the Patent Act of 1952, 35 U.S.C. 271, codified the law of contributory infringement as it existed prior to the decision in *Mercoid Corp.* v. *Mid-Continent Investment Co.,* 320

[8] 2 U.S. Cong. News, 1952, *supra,* n. 4, at 2411; 35 U.S.C.A. 103, note.

U.S. 661 (1944). The Court concluded (377 U.S. 492, 12 L. Ed. 2d 472) that "Congress enacted § 271 for the express purpose of reinstating the doctrine of contributory infringement as it had been developed by decisions prior to Mercoid, and of overruling any blanket invalidation of the doctrine that could be found in the Mercoid opinions." We submit that there could be no more conclusive demonstration of the fallacy of the uncritical statements of some Circuit Courts of Appeals that the Patent Act of 1952 merely "codified" the recent decisions of this Court.

The interpretation placed on Section 103 by Judge Hand is supported by the opinions of authoritative commentators. Thus, Senator Joseph C. O'Mahoney, Chairman, Subcommittee on Patents, Trademarks, and Copyrights, Committee on the Judiciary, United States Senate, wrote in 1957 that in "1952 * * * the test of *Hotchkiss* v. *Greenwood* was written into the statutes."[9] Again, Judge Giles S. Rich, of the United States Court of Customs and Patent Appeals, who was one of the drafters of the Patent Act,[10] had this to say:[11]

> * * * there are some things about the Patent Act of 1952 which neither the bar nor the courts seem to have fully comprehended. The bar, of course, takes up opposite sides and confuses the courts,

---

[9] *Foreword to Study of The Subcommittee on Patents, Trademarks, and Copyrights, Committee on the Judiciary, Pursuant to S. Res. 55, 85th Congress, 1st Session, Study No. 7—Efforts to Establish a Statutory Standard of Invention.*

[10] See Rich, *Congressional Intent—or, Who Wrote The Patent Act of 1952,* published at pages 61-78 of *Patent Procurement and Exploitation* (1963), BNA, Inc., Washington, Library of Congress Catalogue Number 63-17943.

[11] Rich, *The Principles of Patentability,* 28 George Washington L.R. 393, 405 (1960); 42 J. Pat. Off. Soc'y., No. 2, Feb. 1960, 75, 88, 89.

so the courts may be forgiven for taking so long to reach *Lyon* v. *Bausch & Lomb, the first opinion, thanks to the perception of Judge Learned Hand, to express clearly what was actually in the minds of the drafters of the act.* (Emphasis added)

* * *

Though one may call Section 103 'codification' it took a case law doctrine, expressed in hundreds of different ways, and put it into statutory language in a single form approved by Congress. In such form it became law superior to that which may be derived from any prior court opinion.

* * * *The Patent Act of 1952 expresses this prerequisite to patentability without any reference to 'invention' as a legal requirement.* Nowhere in the entire act is there any reference to a requirement of 'invention' and the drafters did this deliebrately in an effort to free the law and lawyers from bondage to that old and meaningless term. * * * (Emphasis as in original)

* * * *The act sets as the standard of patentability the unobviousness of the invention, at the time it was made, to a person having ordinary skill in the art.* Therefore, what we have today, and have had since January 1, 1953, is a requirement of *unobviousness,* rather than a requirement of 'invention.' (Emphasis as in original)

In his *Commentary on The New Patent Act,* published in 35 U.S.C.A., Mr. P. J. Federico added further testimony tending to support Judge Hand's thesis. Mr. Federico, Examiner-in-Chief, United States Patent Office, was one of the principal drafters of the Patent Act.[12] Writing in 1954, he said:[13]

* * *

---

[12] Rich, op. cit. *supra,* n. 10.

[13] 35 U.S.C.A., preceding Sec. 1—at pp. 22, 23.

"There has been some discussion as to whether section 103 modifies the so-called standard of invention (which itself is an unmeasurable quantity having different meanings for different persons) in the courts and it may be correct to state that the printed record does not show an explicit positive command to the courts. While it is not believed that Congress intended any radical change in the level of invention or patentable novelty, nevertheless, it is believed that some modification was intended in the direction of moderating the extreme degrees of strictness exhibited by a number of judicial opinions over the past dozen or more years; that is, that some change of attitude more favorable to patents was hoped for. This is indicated by the language used in section 103 as well as by the general tenor of remarks of the Committees in the reports and particular comments. Weight should be given to the terms used in the section since a variety of expressions used in decisions were available, including some stated with an extreme degree of strictness, which could have been used as the model for the phraseology to be adopted, but the language selected was of the more moderate variety. The Committee Report, in the general part, states that the section 'should have a stabilizing effect and minimize great departures which have appeared in some cases'; the departures of which complaint has been made in the recent past are all departures in the direction of greater strictness and hence these would be what the report indicates should be minimized. * * *"

Two statements on the floor of the Senate at the time the Patent Act was passed, one by Senator Wiley and one by Senator McCarran, are sometimes referred to as indicating that the Act did not relax the strict criteria of recent cases. See e.g. *New Wrinkle, Inc.* v.

*Watson,* 92 U.S. App. D.C. 137, 138, n. 6, 206 F. 2d 421, 422 (CCA D.C. 1953). These statements were:

> "Mr. Wiley. I wonder whether the Senator will withhold objection * * *. * * * The bill provides for a codification of the patent laws, and the House of Representatives has worked on this subject for 3 or 4 years. The bill simply constitutes a restatement of the patent laws of the United States." 98 Cong. Rec. 9096, 82d Cong., 2d Sess. (July 3, 1952).
>
> "Mr. Saltonstall. Mr. President, will the Senator from Nevada tell us the purpose of the bill?
>
> "Mr. McCarran. The bill would codify the patent laws of the United States. It is under the able guidance of the Senator from Wisconsin [Mr. Wiley].
>
> "Mr. Saltonstall. I am not a patent lawyer, but I know patents are a very technical subject. Does the bill change the law in any way or only codify the present patent laws?
>
> "Mr. McCarran. It codifies the present patent laws. * * *" 98 Cong. Rec. 9323, 82d Cong., 2d Sess. (July 4, 1952).

The statements of Senators Wiley and McCarran have little if any value as clues to the proper interpretation of the Act. In the first place, those who cite the colloquy between Senator McCarran and Senator Saltonstall apparently overlook the fact that immediately following this exchange Senator McCarran inserted in the record a formal written statement on the bill, prepared by him, in which he said, *"In view of decisions of the Supreme Court and others* as well as trial by practice and error *there have been some changes in the law of patents as it now exists* and some new terminology used." (Emphasis added). 98 Cong.

Rec. 9323, 82d Cong., 2d Sess., July 4, 1952. Moreover, the factual and legislative situation existing when Senators Wiley and McCarran spoke was such that their extemporaneous remarks carry little weight. The bill had come up on the consent calendar, shortly before the end of the session. The Senate was obviously in a hurry. There was no debate, in fact the entire proceedings relating to the bill, on both July 3 and July 4, and including Senator McCarran's formal statement, occupy less than three columns in the Record.[14] The remarks of Senator Wiley and Senator McCarran were made in an attempt to stave off objections, which might have killed the bill. The matter has been fully explained by Mr. S. J. Crumpacker, who as a member of the House Judiciary Committee in 1952 played an active part in formulating and passing the Patent Act.[15] Referring to the exchange between Senators Saltonstall and McCarran, which, says Mr. Crumpacker "unfortunately, has been seized upon by some courts as proof that Congress did not intend to change existing case law by the passage of the act," Mr. Crumpacker explains:[16]

> Anyone familiar with the parlimentary situation then existing can draw certain definite conclusions from a close reading of the foregoing. First, Pat McCarran, the chairman of the Senate Judiciary Committee, had very little familiarity with the legislation. It had been handled in his Commit-

[14] The House proceedings when the bill finally passed were even briefer. 98 Cong. Rec. 9451, 82d Cong., 2d Sess, 1952, July 4, 1952.

[15] Crumpacker, *The Patent Act of 1952—A Congressional Perspective*—published in *Proceedings, Section of Patent, Trademark and Copyright Law, American Bar Association, San Francisco, Cal., Aug. 3-9, 1962*, pp. 141-148.

[16] Op. cit. *supra*, note 15 at 145.

tee by Senator Wiley, whose name was on the Senate Report. Second, McCarran was deftly evading, rather than answering, the questions directed to him, while trying to toss the ball to Senator Wiley, (who seems not to have been present at the time). Third, this colloquy is almost entirely meaningless, it being merely an exchange of pleasantries by some senators having little, if any, familiarity with the subject matter they were discussing.

Turning to the statement by Senator Wiley on July 3, 1952, Mr. Crumpacker comments:[17]

> "More damaging was the statement made the day before by Senator Wiley—who did have some familiarity with the legislation. In trying to persuade Senator Hendrickson not to object, he had said:
>
> > "The bill provides for a codification of the patent laws, and the House of Representatives has worked on this subject for three or four years. The bill simply constitutes a restatement of the patent laws of the United States."
>
> One might pause to consider the semantics used—particularly the possible meaning of the word 'restatement'—but this really should not be necessary. The words were said in great haste, without advance preparation, in an effort to avoid controversy. Senator Wiley certainly must have known that the bill was a revision, as well as a codification, of the patent laws. That he did not make this entirely clear in his exchange with Senator Hendrickson is—under the circumstances—understandable. *There is no justification—in my view of the matter—for any court seizing upon these*

[17] Op. cit. *supra*, note 15 at 145, 146.

> *fragments as support for the view that the act was not intended to modify any existing rule of patent law when—as is clearly shown by its own language, as well as the committee reports of the House and Senate—it was in fact intended to be a revision as well as a codification.* (Emphasis added)

In summary, therefore, we submit that Section 103 of the Patent Act was intended to, and does, substitute the test of non-obviousness, as laid down in *Hotchkiss* v. *Greenwood*, 11 How. 248 (1850) for the "hazy" criteria suggested in recent court decisions.

**Section 103 Is Consistent With the Constitution**

Congressional authority over patents derives of course from Article I, Section 8, Clause 8 of the Constitution, empowering Congress

> "To promote the Progress of Science and useful Arts, by securing for limited Times to Authors and Inventors the exclusive Right to their respective Writings and Discoveries."

As various commentators have explained,[18] Clause 8 was a consolidation of two separate proposals that had been made to the Constitutional Convention. One proposal was for federal jurisdiction over copyrights, the other for federal authority over patents. The merger of the two proposals resulted in the "balanced sentence" which became Clause 8. Congress was thereby given the power to "promote the progress of science

[18] DeWolf, *An Outline of Copyright Law*, 15 (1925); Flemming, *The Origin of The Patent and Copyright Clause of the Constitution*, 17 Georgetown L.J. 109 (1929); Lutz, *Patents and Science—A Clarification of The Patent Clause of the U. S. Constitution*, 18 George Washington, L. R. 50 (1949); Rich, *Principles of Patentability*, 42 J. Pat. Off. Soc'y. 75, 76-80 (1960); Senate Report 1979, June 27, 1952, *supra*, note 4, at 2396.

* * * by securing * * * to authors * * * the exclusive right to their * * * writings"; and the power to "promote the progress of * * * useful arts, by securing * * * to * * * inventors the exclusive right to their * * * discoveries".

This construction of the Constitutional clause is fortified by the fact that at the time the Constitution was written the word "science", (from the Latin *scire*, to know) meant "knowledge" in any field.[19] The word did not have the more specialized and technical connotation which it now carries. The first Patent Act, passed in 1790,[20] clearly recognized the distinction in its title, which was "An Act to promote the progress of useful arts." The patent acts of 1793,[21] 1794[22] and 1836[23] bore like titles. On the other hand, the copyright law of 1790[24] was entitled "An Act for the encourage-

---

[19] Dr. Samuel Johnson's *English Language Dictionary* (1st Amer. ed. 1818) defines "science" as:

1. Knowledge
2. Certainty grounded on demonstration
3. Art attained by precepts, or built on principles
4. Any art or species of knowledge

   I present you with a man Cunning in music and mathematicks. To instruct her fully in those *sciences*. Shaksp.
5. One of the seven liberal arts, grammar, rhetorick, logick, arithmetick, musick, geometry, astronomy.

   Good sense, which only is the gift of heaven, And, though no *science*, fairly worth the seven. Pope.

[20] 1 Stat. 109 (1790).

[21] 1 Stat. 318 (1793).

[22] 1 Stat. 393 (1794).

[23] 5 Stat. 117 (1836).

[24] 1 Stat. 124 (1790).

ment of learning". The word "learning" obviously related to the word "science" in the Constitutional clause. Finally, coming to the present day, we find that both the House and Senate reports on the bill that became the Patent Act of 1952 made it plain that the purpose of Congress in enacting this legislation was to promote progress in "useful arts".[25]

In the first Patent Act of April 10, 1790, 1 Stat. 109, Congress expressed its judgment as to what would promote the progress of useful arts, within the meaning of Clause 8. Thus the Act of April 10, 1790 authorized the Secretary of State, the Secretary of War, and the Attorney General, or any two of them, to issue a patent to any person who "has invented or discovered any useful art, manufacture, engine, machine, or device, or any improvement therein not before known or used * * * if they deem the invention or discovery sufficiently useful and important". In subsequent acts over the years the Congress laid down various other guidelines for the implementation of the Constitutional provision.[26] The Patent Act of 1952 is the last in this series of expressions of Congressional judgment and policy. In that Act Congress expressed the judgment that the progress of useful arts would be promoted by application of the standard of unobviousness, as stated in Section 103, as the test of patentability. This certainly was a reasonable Congressional judgment, of the same type that Congress has made in this field since 1790. It is a judgment in on way inconsistent with the Constitutional grant of power to Congress. And in this

---

[25] Note 4, *supra*.

[26] Act of Feb. 21, 1793, 1 Stat. 318
Act of July 4, 1836, 5 Stat. 117.
Act of June 22, 1874, R.S. Sec. 4886

connection it must be borne in mind always that the "role of the judiciary in reviewing the legislative judgment is a narrow one in any case." See *United States* v. *Twin City Power Co.*, 350 U.S. 222, 224 (1956); *Berman* v. *Parker*, 348 U.S. 26, 32 (1954); *United States ex rel. T.V.A.* v. *Welch*, 327 U.S. 546, 552 (1946); *Old Dominion Land Co.* v. *United States*, 269 U.S. 55, 66 (1925). In this case the legislative judgment should be conclusive.

## CONCLUSION

The Amicus Curiae submits that the reasoning and conclusions of Judge Hand and the Circuit Court of Appeals for the Second Circuit in *Lyon* v. *Bausch & Lomb Optical Co.*, 224 F. 2d 530, *cert. den.* 350 U.S. 911 (1955) and *Reiner* v. *I. Leon Co.*, 285 F. 2d 501 (1960), *cert den.* 366 U.S. 929, are sound and should be approved by this Court: that Section 103 of the Patent Act of 1952 establishes as the standard of patentability substantially the test announced in *Hotchkiss* v. *Greenwood*, 11 How. 248, and thereby nullifies the more exacting criteria suggested by recent decisions, and that as so interpreted Section 103 is plainly consistent with the Constitution.

Respectfully submitted,

ROGER ROBB
*Counsel for*
*American Bar Association,*
*Amicus Curiae*

March, 1965

ILE COPY

Office-Supreme Court, U.S.
FILED
MAR 4 1965
JOHN F. DAVIS, CLERK

IN THE

# Supreme Court of the United States

OCTOBER TERM, 1964.

No. [redacted] 11

WILLIAM T. GRAHAM, AND GRAHAM PLOW, INC.,
*Petitioners,*

*vs.*

JOHN DEERE COMPANY OF KANSAS CITY, AND DEERE & COMPANY,
*Respondents.*

## BRIEF, AMICUS CURIAE.

ILLINOIS STATE BAR ASSOCIATION,
GEORGE E. FROST,
135 So. LaSalle Street,
Chicago, Illinois,
JAMES M. WETZEL,
38 South Dearborn Street,
Chicago, Illinois.

Chicago, Illinois,

March 4, 1965.

THE GUNTHORP-WARREN PRINTING COMPANY, CHICAGO

## INDEX.


| | PAGE |
|---|---|
| Authority to File | 1 |
| Interest of the Illinois State Bar Association | 1 |
| Argument | 3 |
| I. Development of the Law of Unobviousness | 3 |
| II. 35 U. S. C. 103 and Its Purpose | 4 |
| III. Constitutional and Statutory Provisions Involved | 5 |
| IV. The Eighth Circuit Opinion Below | 6 |
| V. The Fifth Circuit Opinions on Section 103 | 7 |
| VI. Section 103 Is Constitutional | 7 |
| VII. Section 103 Is in Furtherance of the Public Interest and Must Be Given Its Full Effect | 9 |
| Appendix A | 11 |
| Appendix B | 13 |

CITATIONS.

Cases:

Bank v. Sherman, 101 U. S. 403, 406 ..... 5
Hotchkiss v. Greenwood, 52 U. S. (11 Howard) 248 (1850) ..... 3, 5, 9
Sinclair Refining Co. v. Atkinson, 370 U. S. 195, 203 5

Statutes:

1 Statute 102 ..... 8
1 Statute 318 ..... 8
35 U. S. C. 101 ..... 8
35 U. S. C. 102 ..... 8
35 U. S. C. 103 ..... 2, 3, 4, 5, 6, 7, 8, 9, 10

Miscellaneous:

Constitution, Article I, Section 8, Clause 8 ..... 5, 6, 7
House Report No. 1923, May 12, 1952, Page 8 .... 4

IN THE

# Supreme Court of the United States

OCTOBER TERM, 1964.

---

**No. 580.**

---

WILLIAM T. GRAHAM, AND GRAHAM PLOW, INC.,
*Petitioners,*

*vs.*

JOHN DEERE COMPANY OF KANSAS CITY, AND DEERE & COMPANY,
*Respondents.*

---

## BRIEF, AMICUS CURIAE, FOR THE ILLINOIS STATE BAR ASSOCIATION.

---

### AUTHORITY TO FILE.

This brief, Amicus Curiae, is presented to the Court under Rule 42-2. The letters of consent from the Petitioners and the Respondents are on file with the Clerk of the Court. Copies are attached hereto as Appendix A and Appendix B, respectively.

### INTEREST OF THE ILLINOIS STATE BAR ASSOCIATION.

The Illinois State Bar Association is an association of members of the bar of the State of Illinois. We are concerned with the application of the law in the public interest. We believe that an expression of our views on Title 35, Section 103, United States Code, will aid this Court in determining the important issues raised by the present case.

We are specifically moved to file this brief because this is the first case before this Court on Title 35, Section 103 and, further, because we believe that the opinion of the Court of Appeals for the Eighth Circuit below errs in its departure from this statute. We have no concern with, and express no views on, the private interests of any party to this litigation.

## ARGUMENT.

### I. DEVELOPMENT OF THE LAW OF UNOBVIOUSNESS.

The first patent law was enacted in 1790. With the exception of Section 2 of the 1793 Patent Act, repealed in 1836, no patent act prior to 1952 set forth a quantitative standard of how the subject matter of a patent must differ from the prior art. A rule based on the "skill of the art" standard was, however, evolved by judicial decision.

The leading case is this Court's decision in *Hotchkiss* v. *Greenwood,* 52 U. S. (11 How.) 248 (1850). This Court there affirmed the judgment of the trial court. The trial court charged the jury that if

> "no more ingenuity or skill (was) required to construct the knob in this way than that possessed by an ordinary mechanic acquainted with the business, the patent was invalid." (Page 265.)

In a dissenting opinion, Mr. Justice Woodbury expressed the view that the instruction should have followed a less stringent test of "cheaper and better". (52 U. S. (11 How.) at p. 267.)

The "skill in the art" test enunciated in *Hotchkiss* v. *Greenwood* has been followed, in the main, by this Court and the lower Federal Courts. In the years immediately preceding 1952, some language used in opinions of this Court led some to believe that the "skill of the art" test had been displaced by an even more stringent standard. Section 103 was enacted in 1952 to resolve these uncertainties.

**II. 35 USC 103 AND ITS PURPOSE.**

Section 103, Title 35, United States Code, reads as follows:

> "Conditions for patentability; non-obvious subject matter
>
> *A patent may not be obtained* though the invention is not identically disclosed or described as set forth in Section 102 of this title, *if the differences between the subject matter sought to be patented and the prior art are such that the subject matter* as a whole *would have been obvious* at the time the invention was made *to a person having ordinary skill in the art* to which said subject matter pertains. Patentability shall not be negatived by the manner in which the invention was made." (Emphasis added.)

This section of the statute codified the law. It was intended to lend a "stabilizing effect" on the determination of patentability. See House Report No. 1923, May 12, 1952, page 8. The committee report further states:

> "Section 103, for the first time in our statute, provides a condition which exists in the law and has existed for more than 100 years, but only by reason of decisions of the courts. An invention which has been made, and which is new in the sense that the same thing has not been made before, may still not be patentable if the difference between the new thing and what was known before is not considered sufficiently great to warrant a patent . . . Section 103 states this requirement in the title.
>
> "That provision paraphrases language which has often been used in decisions of the courts, and the section is added to the statute for uniformity and definiteness . . ." (Id.)

Thus, according to the standard as restated in Section 103, a patent can be awarded only for that which would not have been obvious to a person having ordinary skill in the

art at the time the invention was made. This language is similar to that endorsed by a majority of this Court in *Hotchkiss* v. *Greenwood.*

Section 103 equally rejects a standard such as "better and cheaper". It thus rejects the standard followed in Mr. Justice Woodbury's dissent in *Hotchkiss* v. *Greenwood.*

Section 103 is a statutory expression of the "skill of the art" test. It should be applied according to the plain import of its words. *Bank* v. *Sherman,* 101 U. S. 403, 406; *Sinclair Refining Co.* v. *Atkinson,* 370 U. S. 195, 203.

## III. CONSTITUTIONAL AND STATUTORY PROVISIONS INVOLVED.

*Constitution.*

Article I, § 8, Clause 8.

The Congress shall have the power * * * to promote the Progress of Science and useful Arts, by securing for limited Times to Authors and Inventors the exclusive Right to their respective Writings and Discoveries; * * *

*Statutes.*

Title 35 U. S. C.

§ 103. Conditions for patentability; nonobvious subject matter.

A patent may not be obtained though the invention is not identically disclosed or described as set forth in Section 102 of this title, if the differences between the subject matter sought to be patented and the prior art are such that the subject matter as a whole would have been obvious at the time the invention was made to a person having ordinary skill in the art to which said subject matter pertains. Patentability shall not be negatived by the manner in which the invention was made.

**IV. THE EIGHTH CIRCUIT OPINION BELOW.**

The court below in the present case noted that the "trial court couched its Finding XV rather precisely in the statutory standard of invention found in 35 U. S. C. § 103". R. 923, 333 F. (2d) 529, 534. The court continued, however, to state:

> "But, other findings of the court lay stress on 'an improved functional result,' and nowhere does the court find any new or significantly different result. * * *"

Moreover, the court stated:

> "In conclusion, we observe once again that the Constitution, Article I, Section 8, Clause 8, authorizes Congress to reward inventive genius but not mechanical skill alone. *Cuno Engineering Corporation* v. *Automatic Devices Corporation, supra,* 314 U. S. at 91; *Steffan* v. *Weber Heating and Sheet Metal Company, supra,* 237 F. 2d at 604 . . ." R. 924, 333 F. (2d) 529, 535.

We submit that here the court below has erred.

Congress has defined the required change over the prior art in Section 103. It is to that statute, and to that statute alone, that the court below should have addressed itself. The test of the statute is whether the subject matter as a whole would have been obvious to one skilled in the art —not whether there is a "new or significantly different result" or whether there is "inventive genius".

The trial court recognized this, addressed itself to the statute, and found as an ultimate fact that the statutory standard of invention of Section 103 had been met. If the trial court was clearly erroneous in this fact finding, the court below certainly should have reversed. But in the absence of determination that such fact finding was clearly erroneous, the court below was bound to affirm. In no event, we submit, should the Eighth Circuit Court of Appeals have

engrafted on Section 103 a fact requirement of "new or significantly different result", "inventive genius", or anything else that the statute nowhere contains.

**V. THE FIFTH CIRCUIT OPINIONS ON SECTION 103.**

We note that the court below reads decisions of the Court of Appeals for the Fifth Circuit as requiring only that a patented combination of old elements produce "an old result in a cheaper and otherwise more advantageous way". R. 922, 333 F. (2d) 529, 533. We make no comment on whether this is a correct or incorrect reading of that Court's decisions. However, we do point out that in reaching an ultimate fact finding on unobviousness a court can and should consider various basic facts that go to the determination of the ultimate fact expressed in the statute. Among these basic facts are whether the result achieved is old or new, whether the result is achieved in a cheaper or otherwise more advantageous way, and the like. But if the Court of Appeals for the Fifth Circuit really has substituted an ultimate standard of "cheaper and otherwise more advantageous way" for the ultimate fact of unobviousness as expressed in Section 103, we believe that it too has erred.

**VI. SECTION 103 IS CONSTITUTIONAL.**

Section 103 was enacted pursuant to Article I, Section 8, clause 8 of the Constitution. This gives the Congress power:

> ". . . to promote the progress of science and useful arts, by securing for limited times to authors and inventors the exclusive right to their respective writings and discoveries."

This provision assigns to Congress a broad responsibility to determine the subject matter, the conditions, and the term for which it will grant patents. Since 1790 the

Congress has exercised this power through the enactment of general patent statutes that specifically define patentable subject matter, the patent term, what is "prior art" and other conditions and terms of the patent grant.

For example, in Section 1 of the 1790 Patent Act Congress defined patentable subject matter as "any useful art, manufacture, engine, machine, or device, or any improvement therein." (1 Stat. 102.) Today, Section 101 of the 1952 Patent Code defines patentable subject matter to include "any new and useful process, machine, manufacture, or composition of matter, or any new and useful improvement thereof . . ."

Similarly Section 1 of the 1790 Patent Act, required that the "useful art, manufacture" etc. be "not before known or used." (1 Stat. 102.) Today, Section 102 of the 1952 Patent Code sets forth related requirements that the invention not be "known or used by others" or "patented or described in a printed publication" and the like.

Not only this, there is a specific statutory precedent for Section 103 of the 1952 Patent Code. This is found in the 1793 "Act to promote the progress of useful Arts." (1 Stat. 318.) The terminal sentence of Section 2 of that Act reads:

> "And it is hereby enacted and declared, that simply changing the form or the proportions of any machine, or composition of matter, in any degree, shall not be deemed a discovery." (1 Stat. 318.)

The provisions of Section 103 of the 1952 Patent Code reflect the determination of the Congress of what may be patented, how it may be patented, and the term of the patent when granted. As to all of these many aspects of the law, the Congress has made a legislative determination that the Constitutional power permits, that public policy requires, and that the public interest is protected and promoted by, the patent law as expressed in the statute.

There is no valid reason to interfere with the legislative determination of Congress expressed in Section 103. Indeed, it expresses in statutory language substantially the same "skill in the art" test that this Court itself enunciated in *Hotchkiss* v. *Greenwood*, 52 U. S. (11 Howard) 248 (1850). It also follows the precedent of the 1793 Patent Act which in part defined a wholly comparable standard.

## VII. SECTION 103 IS IN FURTHERANCE OF THE PUBLIC INTEREST AND MUST BE GIVEN ITS FULL EFFECT.

The standard of patentability set forth in Section 103 is stringent. No common change over the prior art can measure up as "unobvious." Patentability is reserved for the exceptional cases. This is as it should be. The public interest is safeguarded.

At the same time, the standard is not impossible to meet. Again, this is as it should be. Unless business enterprise and inventors are advised in advance that they face an attainable (though strict) standard, the patent law stimulus to invent and to market becomes theory and not reality.

Section 103 serves an additional important function. It defines a fact standard for the courts and the Patent Office to apply. Attainment of the Constitutional objective of progress of the useful acts is clearly aided by this carefully framed legislatively expressed standard.

Insofar as the court below relied upon standards other than that expressed in Section 103, we submit that the court erred.

Respectfully submitted,

ILLINOIS STATE BAR ASSOCIATION,
GEORGE E. FROST,
135 So. LaSalle Street,
Chicago, Illinois,
JAMES M. WETZEL,
38 South Dearborn Street,
Chicago, Illinois,
*Its Attorneys.*

Chicago, Illinois,

March 2, 1965.

## APPENDIX A.

(Letterhead of Claude A. Fishburn and Orville O. Gold, Kansas City, Mo. 64106.)

Febbruary 16, 1965

Mr. George Frost
135 So. La Salle Street
Chicago, Illinois

In re: No. 580 in the Supreme Court of the United States; William T. Graham and Graham Plow, Inc., Petitioners, vs. John Deere Company of Kansas City and Deere & Company, Respondents.

Dear Mr. Frost:

In behalf of the petitioners in the above cause, we hereby consent to your filing an amicus curiae brief in behalf of the Section on Patent, Trademark and Copyright Law of the Illinois State Bar Association.

Yours very truly,

Fishburn and Gold,
By: Claude A. Fishburn.

CAF:fj

cc: Mr. Tom Arnold, Chairman
Patent, Trademark and Copyright Section
American Bar Association
2220 Tennessee Building
Houston, Texas 77002

cc: Mr. S. Tom Morris
630 Amarillo Building
Amarillo, Texas 79101

cc: Mr. James M. Wetzel
Hume, Groen, Clement & Hume
38 So. Dearborn Street
Chicago, Illinois 60603

## APPENDIX B.

(Letterhead of Gibson, Ochsner, Harlan, Kinney & Morris, Amarillo, Texas 79101.)

February 18, 1965

Air Mail
Mr. George E. Frost, Chairman,
Section on Patents, Trademarks
and Copyright Law
Illinois State Bar Association
135 South LaSalle Street
Chicago, Illinois

In re: No. 580 in the Supreme Court of the United States; William T. Graham and Graham Plow, Inc., Petitioners, vs. John Deere Company of Kansas City and Deere & Company, Respondents

Dear Mr. Frost:

We acknowledge Mr. Wetzel's letter of February 16, 1965, and in behalf of the Respondents in the above cause I hereby consent to your filing an amicus curiae brief in behalf of the Section on Patents, Trademarks and Copyright Law of the Illinois State Bar Association.

Yours very truly,

Gibson, Ochsner, Harlan, Kinney & Morris,

By S. Tom Morris.

STM/fj

cc: Mr. James M. Wetzel
Hume, Groen, Clement & Hume
38 So. Dearborn Street
Chicago, Illinois 60603

Fishburn and Gold
Attorneys at Law
1217 Commerce Trust Building
Kansas City, Missouri 64106

Mr. Thomas E. Scofield
Scofield, Kokjer, Scofield & Lowe
1325 Rialto Building
Kansas City 6, Missouri

## INDEX


PAGE

Argument ..... 2

Conclusion ..... 10


CITATIONS

*Cases:*


Barenblatt v. United States, 360 U. S. 109, 132 (1959) ..... 8

Berman v. Parker, 348 U. S. 26, 32 (1957) ..... 7

Cuno Engineering Corp. v. Automatic Devices, 314 U. S. 84, 91 (1941) ..... 5, 9

John Deere Company of Kansas City v. Graham, 333 F. 2d 529 (8 Cir. 1964) ..... 2

Dewey v. United States, 178 U. S. 510, 520-1 (1900) ..... 8

Dunbar v. Meyers, 94 U. S. 187, 197-200 (1876).. 5

Eibel Process Co. v. Minn. & Ontario Paper Co., 261 U. S. 45, 63 (1923) ..... 5

Electric Battery Co. v. Shimadzu, 307 U. S. 5, 14 (1939) ..... 8

Expanded Metal Co. v. Bradford, 214 U. S. 366, 381 (1908) ..... 5

FTC v. Simplicity Pattern Co., 360 U. S. 55, 67-8 (1959) ..... 8

Gibbons v. Ogden, 22 U. S. (9 Wheat.) 1, 196-7 (1824) ..... 8

Great A. & P. Tea Co. v. Supermarket Corp., 340 U. S. 147 (1950) ..... 5

Guaranty Trust Co. v. Henwood, 307 U. S. 247, 259 (1939) ..... 8

PAGE

Helvering v. Davis, 301 U. S. 619, 640 (1937) .... 8

Hotchkiss v. Greenwood, 52 U. S. (11 How.) 248 (1850) ..... 4, 5

Jungersen v. Ostby & Barton Co., 335 U. S. 560, 568, 571-2 (1949) ..... 5

Lincoln Co. v. Stewart Warner Corp., 303 U. S. 545, 549 (1938) ..... 5

Local 1976 v. NLRB, 357 U. S. 93, 100 (1958) ... 7

McClain v. Ortmayer, 141 U. S. 419, 425-29 (1891) 5

Mantle Lamp Co. v. Aluminum Products Co., 301 U. S. 544, 546 (1936) ..... 5

Mercoid Corp. v. Mid-Continent Investment Co., 320 U. S. 661, 665 (1944) ..... 7

NLRB v. Jones & Laughlin Steel Corp., 301 U. S. 1, 46 (1936) ..... 8

Polish Alliance v. NLRB, 322 U. S. 643, 650-1 (1944) ..... 8

Potts v. Creager, 155 U. S. 597, 607 (1894) .... 5

Railway Employe's Dept. v. Hanson, 351 U. S. 225, 234 (1956) ..... 8

Sears, Roebuck & Co. v. Stiffel Co., 376 U. S. 225, 231 (1964) ..... 9

Secretary of Agriculture v. Central Roig Refining Co., 338 U. S. 604, 618, 619 (1950) ..... 8

Sinclair Refining Co. v. Atkinson, 370 U. S. 195, 214-5 (1962) ..... 8

Smith v. Whitman Saddle Company, 148 U. S. 674, 681 (1893) ..... 5

United States v. American Union Transport, Inc., 327 U. S. 434, 456-7 (1946) ..... 8

PAGE

United States v. Darby, 312 U. S. 100, 115-6 (1940) ..... 8

United States v. Duell, 172 U. S. 576, 583 (1898) 3

United States v. Twin City Power Co., 350 U. S. 222, 224 (1956) ..... 8

*Statutes:*

Article 1, Section 8 of the U. S. Constitution ..... 3

Title 35 United States Code ..... 1, 2

Patent Act of 1952 .....4, 7, 9, 10

Title 35 United States Code §§ 101, 102, 103 and 282 .....2, 6, 7, 8, 9, 10

*Miscellaneous:*

S. Rep. No. 1979, 82nd Cong., 2nd Sess. 4, 5, 6 (1952) ..... 6, 7

H. R. Rep. No. 1923, 82nd Cong., 2nd Sess. 5, 6 (1952) ..... 6, 7

U. S. Cong. & Adm. News 1952, page 2411 ..... 9

Deller's Walker on Patents (2nd Ed.), Volume 3, pages 197, et seq. ..... 3

Appendix A ..... 1a

IN THE

# Supreme Court of the United States

OCTOBER TERM, 1964

---

**No. 580**

---

WILLIAM T. GRAHAM and GRAHAM PLOW, INC.,

Petitioners,

*v.*

JOHN DEERE COMPANY OF KANSAS CITY and DEERE & COMPANY,

Respondents.

---

ON WRIT OF CERTIORARI TO THE UNITED STATES COURT OF APPEALS FOR THE EIGHTH CIRCUIT

---

## BRIEF FOR THE NEW YORK PATENT LAW ASSOCIATION AS *AMICUS CURIAE*

The New York Patent Law Association files this brief as *amicus curiae* pursuant to Rule 42(2). (See concurrently filed letters of consent of the parties.)

The New York Patent Law Association is an association of approximately 1100 practicing lawyers whose primary interest is in the field of patent law. It has a vital and continuing interest in the administration of the Patent Law (United States Code Title 35); and is cognizant of the widespread public and commercial interest in the basic legal issue and related fundamental juridical question

underlying the resolution of the controversy presented by the particular question phrased by the parties hereto, i.e., the validity of United States Patent No. 2,627,798.

This association has no interest in and takes no position with respect to the validity or invalidity of United States Patent No. 2,627,798 but will direct itself entirely to the more fundamental issue of the nature of the applicable conditions and requirements for patentability of inventions upon which the question of validity of patents must ultimately be determined.

## Argument

The basic question before this Court is succinctly posed by the following extract from the decision of the Court of Appeals for the Eighth Circuit in its opinion below:

> "Here, the trial court couched its Finding XV rather precisely in the statutory standard of invention found in 35 U. S. C. § 103, and found that the 798 Patent structure would not have been obvious at the time it was made to a person having ordinary skill in the art. But, other findings of the court lay stress on 'an *improved* functional result,' and nowhere does the court find any new or significantly different result. Seemingly, the trial court failed to apply the more exacting standard which in our view is implicit in the teachings of the Supreme Court in Cuno Engineering Corporation, supra, 314 U. S. 84, 51 USPQ 272, and Great A. & P. Tea Co., supra, 340 U. S. 147, 87 USPQ 303, and which we have applied in numerous cases subsequent thereto" (333 F. 2d 529 at 534).

The basic question so posed is whether the federal courts may add conditions for patentability to those enunciated by Congress in Title 35 of the United States Code. It is

the view of our association that the federal courts cannot properly do so.

Article 1, Section 8 of the Constitution of the United States states:

> "The Congress shall have power
>
> • • • • •
>
> "To promote the progress of science and useful arts, by securing for limited times to authors and inventors the exclusive right to their respective writings and discoveries:"

Under such power Congress has plenary authority to enact all laws consistent with the specified purpose of promoting *"the progress of science and useful arts"**, and which, in its judgment, will be best calculated to effect that object. In *United States* v. *Duell,* 172 U. S. 576, 583 (1898), this Court said:

> "Since, under the Constitution, Congress has power 'to promote the progress of science and useful arts, by securing for limited times to authors and inventors the exclusive right to their respective writings and discoveries,' and to make all laws which shall be necessary and proper for carrying that expressed power into execution, it follows that Congress may provide such instrumentalities in respect of securing to inventors the exclusive right to their discoveries *as in its judgment will be best calculated to effect that object.*"

Pursuant to such enumerated power Congress has many times since 1790** enacted legislation in the patent field. See *Deller's Walker on Patents* (2nd Ed.), Vol. 3, pages 197 *et seq.* Despite such continued Congressional scrutiny

---

* Emphasis hereafter ours unless otherwise noted.

** The original patent act of 1790 was titled "An Act to Promote the Progress of Useful Arts".

and activity, the peculiar fact is that none of the statutes enacted by Congress prior to the passage of the 1952 Patent Act ever attempted to define or delineate any statutory requirements or conditions for patentability other than novelty and utility.*

Within the statutory framework that existed before the 1952 Act, the federal courts were unrestrained by Congress and were free to resolve, on a case by case basis, the question of whether patentability required something more than novelty and utility and, if so, the nature of that "something more".

The judicial delineation of such additional requirement for patentability had its genesis in *Hotchkiss* v. *Greenwood*, 52 U. S. (11 How.) 248 (1850). That decision phrased a requirement of the "something more" than novelty and utility in terms of the presence of a "degree of skill and ingenuity which constitute essential elements of every invention" as follows:

> "* * * for unless more ingenuity and skill in applying the old method * * * were required than were possessed by an ordinary mechanic acquainted with the business, there was an absence of that degree of skill and ingenuity which constitute essential elements of every invention. In other words, the improvement is the work of the skilful mechanic, not that of the inventor" (52 U. S. at 266).

The reasoning of this case and what followed after it was an injection into the law of what has ever since been called a requirement for "invention". Generally, this Court

---

* See, e.g., Edwards, *Efforts To Establish A Statutory Standard Of Invention*, Study No. 7, Subcomm. on Patents, Trademarks and Copyrights, Senate Comm. on the Judiciary, 85th Cong., 1st Sess. 1-2 (Comm. Print 1958); Frost, *The Patent System And The Modern Economy*, Study No. 2, Subcomm. on Patents, Trademarks and Copyrights, Senate Comm. on the Judiciary, 84th Cong., 2nd Sess. 47-60 (Comm. Print 1957).

applied this requirement of "invention", albeit with verbal variants, during the ensuing years. See, e.g., *Dunbar* v. *Meyers,* 94 U. S. 187, 197-200 (1876); *McClain* v. *Ortmayer,* 141 U. S. 419, 425-29 (1891); *Expanded Metal Co.* v. *Bradford,* 214 U. S. 366, 381 (1908); *Eibel Process Co.* v. *Minn. & Ontario Paper Co.,* 261 U. S. 45, 63 (1923). Other verbal variants made their appearance and were such as to be later readily arguable as representing marked departures from the *Hotchkiss* v. *Greenwood* requirement. See, *Smith* v. *Whitman Saddle Company,* 148 U. S. 674, 681 (1893); *Potts* v. *Creager,* 155 U. S. 597, 607 (1894); *Mantle Lamp Co.* v. *Aluminum Products Co.,* 301 U. S. 544, 546 (1936).

In the more recent years prior to 1952, the terminology and associated comments employed by this Court relative to the delineation of the requirement of "invention" elevated them into "standards" which differed from those of earlier cases. See *Lincoln Co.* v. *Stewart Warner Corp.,* 303 U. S. 545, 549 (1938); *Cuno Engineering Corp.* v. *Automatic Devices Corp.,* 314 U. S. 84, 91 (1941). Such terminology, coupled with the associated comments in *Great A. & P. Tea Co.* v. *Supermarket Corp.,* 340 U. S. 147 (1950), created serious questions as to uniformity and definiteness of the requirements for patentable invention in the lower courts and, more importantly, as to whether the requirements or standards of "invention" were being judicially raised to a level that would impede, rather than promote, the progress of useful arts.

The cumulative effect of the above, when viewed in light of the increased proportion of patents that were being held invalid on reaching this Court, was the creation of a situation that could be described as basically unstable and unworkable and which led to pointed commentaries by members of this Court over the role of the judiciary in the patent system. See, *Jungersen* v. *Ostby & Barton Co.,* 335 U. S. 560, 568, 571-2 (1949).

At least in partial response to the above development, Congress, in the late 1940's, considered the enactment of

a statutorily defined requirement or standard of "invention".* These efforts resulted in the enactment of the 1952 Act containing §§ 101, 102 and 103 of Title 35 of the United States Code with which the Court is presently concerned.

As noted in both the Senate and House Reports on the subject legislation, "Section 101 sets forth the subject matter that can be patented, 'subject to the conditions and requirements of this title.' The conditions under which a patent may be obtained follow, and Section 102 covers the condition relating to novelty."** Section 102 significantly uses mandatory language—"A person shall be entitled to a patent unless * * *" and this is followed by an enumeration of negative conditions.

The Senate and House Reports also state:

> "There are a number of changes in substantive statutory law * * *. The major changes or innovations in the title consist of incorporating a requirement for invention in § 103 * * *."***

With respect to § 103, the Reports state:

> "Section 103, for the first time in our statute, provides a condition which exists in the law and has existed for more than 100 years, but only by reason of decisions of the courts. An invention which has been made, and which is new in the sense that the same thing has not been made before, may still not be patentable if the difference between the new thing and what was known before is not considered sufficiently great to warrant a patent. That has been expressed in a large variety of ways in decisions of the Courts and in writings. Sec. 103 states this requirement in the

---

* See Edwards, *supra* footnote, page 4 at 2-15.

** S. Rep. No. 1979, 82nd Cong., 2nd Sess. 5 (1952); H. R. Rep. No. 1923, 82nd Cong., 2nd Sess. 6 (1952).

*** *Id.*, S. Rep. at 4; H. R. Rep. at 5.

title. It refers to the difference between the subject matter sought to be patented and the prior art, meaning what was known before as described in section 102. If this difference is such that the subject matter as a whole would have been obvious at the time to a person skilled in the art, then the subject matter cannot be patented."*

As to the intent and purpose of Congress, the Reports continue:

"That provision paraphrases language which has often been used in decisions of the Courts, and the section is added to the statute for uniformity and definiteness. This section should have a stabilizing effect and minimize great departures which have appeared in some cases."**

The exclusive nature of the Congressionally selected standard of patentability or "invention" as defined in § 103 is confirmed by the express wording of § 282 which enumerates the defenses available in patent actions.

Thus, Congress has, in the Patent Act of 1952, for the first time defined the statutory requirement for, and standard of, "invention" as one of the "conditions for patentability".

The public interest is dominant in the patent system. *Mercoid Corp.* v. *Mid-Continent Investment Co.*, 320 U. S. 661, 665 (1944). But the legislature is the prime guardian of the public interest. This was recognized in *Berman* v. *Parker*, 348 U. S. 26 at 32 (1957):

"* * * Subject to specific constitutional limitations, when the legislature has spoken, the public interest has been declared in terms well-nigh conclusive. * * *."***

---

* *Id.*, S. Rep. at 6; H. R. Rep. at 5.
** *Id.*, S. Rep. at 6; H. R. Rep. at 5.
*** Cf. *Local 1976* v. *NLRB*, 357 U. S. 93, 100 (1958).

It is settled law, both as a general proposition and with respect to other enumerated powers of Congress, that where Congress has acted, judicial power is effectively limited to the determination of whether the legislature, in what it has prescribed, has gone beyond constitutional limits. In this determination the Court is not concerned whether the action taken was wise or expedient. *Gibbons* v. *Ogden,* 22 U. S. (9 Wheat.) 1, 196-7 (1824); *NLRB* v. *Jones & Laughlin Steel Corp.,* 301 U. S. 1, 46 (1936); *Helvering* v. *Davis,* 301 U. S. 619, 640 (1937); *Guaranty Trust Co.* v. *Henwood,* 307 U. S. 247, 259 (1939); *Polish Alliance* v. *NLRB,* 322 U. S. 643, 650-1 (1944); *United States* v. *Twin City Power Co.,* 350 U. S. 222, 224 (1956); *Railway Employe's Dept.* v. *Hanson,* 351 U. S. 225, 234 (1956); *Sinclair Refining Co.* v. *Atkinson,* 370 U. S. 195, 214-5 (1962).* It is also recognized that the judicial power does not extend to engraftment to, or superimposition on, legislative action. *Dewey* v. *United States,* 178 U. S. 510, 520-1 (1900); *Electric Battery Co.* v. *Shimadzu,* 307 U. S. 5, 14 (1939); *United States* v. *American Union Transport, Inc.,* 327 U. S. 434, 456-7 (1946).

By its enactment of § 103, Congress has pre-emptively defined a statutory requirement of "invention" expressed as a condition for patentability to the effect that a patent may *not* be obtained:

> "* * * if the differences between the subject matter sought to be patented and the prior art are such that the subject matter as a whole would have been obvious at the time the invention was made to a person having ordinary skill in the art to which said subject matter pertains * * *."

The exclusivity of such condition for patentability is further emphasized by the concluding sentence of the section

---

* See *United States* v. *Darby,* 312 U. S. 100, 115-6 (1940); *Secretary of Agriculture* v. *Central Roig Refining Co.,* 338 U. S. 604, 618, 619 (1950); *FTC* v. *Simplicity Pattern Co.,* 360 U. S. 55, 67-8 (1959); *Barenblatt* v. *United States,* 360 U. S. 109, 132 (1959).

and the Revision Notes which express a Congressional negation of certain previously enunciated judicial criteria,* as follows:

> "Patentability shall not be negatived by the manner in which the invention was made."

The Revision Note states:**

> "The second sentence states that patentability as to this requirement is not to be negatived by the manner in which the invention was made, that is, it is immaterial whether it resulted from long toil and experimentation or from a flash of genius."

In the light of the foregoing, we submit that the passage of the 1952 Patent Act so circumscribed the power of the federal courts as to preclude their enunciation of any additional conditions for patentability or standards of "invention" and effectively limited the function of such courts to the application of the Congressionally enacted standard.

In the recent case of *Sears, Roebuck & Co.* v. *Stiffel Co.*, 376 U. S. 225, 231 (1964), this Court, per Mr. Justice Black, again recognized that under the Constitution it is Congress that determines the national policy with respect to patents and that such policy should be applied uniformly throughout this country. The condition for, or standard of, patentability as defined in Section 103 should be uniformly applied by the federal courts sitting throughout this country.

As recently pointed out by Judge Giles S. Rich of the United States Court of Customs and Patent Appeals, one of the major problems in the administration of Section 103 is a confusion of terminology and meaning which had grown up over the past 100 years. As Judge Rich clearly

---

* Cf. *Cuno Engineering Corp.* v. *Automatic Devices*, 314 U. S. 84 (1941).

** U. S. Cong. & Adm. News 1952, page 2411.

pointed out, the basic issue is one of "patentability" and not one of "invention". We recommend to this Court's attention the recent address of Judge Rich, annexed hereto as Appendix A, in which he reviews the historical background, the reasons for the enactment of Section 103 of the 1952 Act and the problems attendant its administration.

## CONCLUSION

**Since the passage of the 1952 Patent Act the conditions for patentability have been exclusively defined by statute and it has been the function of the federal courts to ascertain whether such conditions have been satisfied. In the case at bar, the Court should determine the validity of patent 2,627,798 by applying to the facts of record the conditions for patentability set forth in the 1952 Patent Act.**

Respectfully submitted,

STANTON T. LAWRENCE, JR.,
*Attorney for The New York Patent Law Association,*
330 Madison Avenue,
New York, New York 10017.

Of Counsel:

ROBERT E. ISNER,
122 East 42nd Street,
New York, New York 10017.

CHARLES E. MCKENNEY,
330 Madison Avenue,
New York, New York 10017.

# APPENDIX A

## KETTERING AWARD ADDRESS

### The Vague Concept Of "Invention" As Replaced By § 103 Of The 1952 Patent Act

JUDGE GILES S. RICH

An address delivered* by Giles S. Rich, Judge of the United States Court of Customs and Patent Appeals, at the Award Dinner of the Eighth Annual Public Conference of The Patent, Trademark and Copyright Research Institute on June 18, 1964. Judge Rich received the Institute's seventh annual "Charles F. Kettering Award for Meritorious work in Patent, Trademark, and Copyright Research and Education."

I believe in incentive systems. Over 20 years ago a prize competition lured me into some intense study and writing[1] which, through a traceable chain of events, has led to my being here tonight.

I did not win the prize. Neither did the other contestants, save one.[2] But they all contributed something. That is the way incentive systems work. They bring out all kinds of efforts, excellent, good, mediocre, indifferent, and bad. But the *system* brings forth the effort. Society benefits from the good and mediocre, as well as the excellent, efforts. The bad efforts don't hurt it any. They may even prevent others from making mistakes if they are made known.

---

* Published in 46 Journal of the Patent Office Society 855 (December 1964).

[1] The Linthicum Foundation Competition, 1941, Dean John H. Wigmore, Northwestern University Law School, Chairman. The writer's contribution was published in five installments in the *Journal of The Patent Office Society*, Vol. 24, pp. 85, 159, 241, 328, and 422, commencing Feb. 1942.

[2] The winner was Laurence I. Wood whose paper was published in book form, 1942, by Commerce Clearing House, Inc., under the title *Patents and Antitrust Law.*

*Appendix A*

The patent and copyright laws create such incentive systems. The copyright laws provide an incentive which brings out the greatest works of literature and art as well as a lot of trash. The patent system works in a similar way. But you can't get cream without producing milk and, anyway, it is the milk that society lives on.

I don't suppose you will be surprised if I talk about the patent system. The aspect of it I will talk about is the one I think causes the most trouble, the clarification of which I therefore believe would do the most good.

As groundwork I will first state an axiomatic but too-little-thought-of principle. A monopoly merely gives rise to *power* which can be put to either good or bad uses. Hence, in the case of monopolies created by government grant, which is all patents are so far as the rights they create are concerned,[3] we have to distinguish between good and bad monopolies.

---

[3] Dean Wigmore, n. 1, in his foreword to the Wood book, n. 2, said:

> * * * I take the opportunity to intrude my personal opinion, that neither Courts nor treatise-writers have been radical enough in defending the legitimacy of the "monopoly" in a patent, as distinguished from the ordinary trade-monopoly. Is it not a fact that every property-right we have is a "monopoly"? The right to our house or our automobile is simply a right to keep anyone else from entering or using it without our consent; and is that not a monopoly?
>
> * * *
>
> Of course patent-rights can be so *used* as to merit the distrust attaching to a monopoly,—by contracts fixing prices, by tying agreements, by pools and the like. But so can gold-mines and all the necessities of life by bargains be used monopolistically; yet no one blames the mine-owning right itself or the food-ownership right itself; the blame is directed to the use of it.
>
> And so I for one regard it as unfortunate that courts and treatise-writers have not stood up more boldly for the fundamental right-ness of the patent right itself. I say "for one", because I do not recall reading anywhere an adequate defense of the theory of the patent-right.

*Appendix A*

I will take two well-known examples from history. First, the bad monopoly. Queen Elizabeth granted to one Darcy, a member of her court, a monopoly of playing-cards for 21 years so that he could make some money. But playing-cards were old and well-known and others were making a living from making and selling them in England. This monopoly, which was by Royal Letters Patent, therefore took from the public a freedom in business which it had long enjoyed before the patent; and it was bad.[4]

In Venice in 1594 the Doge, on behalf of the government, granted to the great Galileo a "privilege," which was the Venetian name for a patent, on a machine which he had *invented* "for raising water and irrigating land with small expense and great convenience," on the condition that it had never before been thought of or made by others.

Galileo made a couple of significant remarks in his petition for the privilege. He said, "it not being fit that this invention, which is my own, discovered by me with great labor and expense, be made the common property of everyone;" and also, that if he were granted the privilege, "I shall the more attentively apply myself to new inventions for universal benefit." In short, he was not inclined to divulge his invention only to have it copied; but if the government would give him some reasonable protection he would not only divulge it and build it but might even apply himself to making some more inventions. Deeming this to be a *good* use to which to put a limited monopoly, the Council voted to grant him a "privilege" or patent of monopoly for 21 years.[5]

---

[4] Darcy v. Allin, 11 Co. Rep. 846: 1 W.P.C. 1. See *Monopolies and Patents* by Harold G. Fox, U. of Toronto Press, 1947, p. 318. The case also has the popular title "The Case of Monopolies."

[5] *Journal of the Patent Office Society,* Centennial Number, "History of the Patent Office," July 1936, Vol. 18, p. 23.

The Venetians were accustomed to doing this, having granted about 1600 "privileges" in the 15th and 16th centuries.[6]

The English in 1624 enacted a statute[7] abolishing and prohibiting future monopolies of the bad Darcy sort and authorizing the continuing grant of Letters Patent for new inventions within the realm, which has continued to this day.

---

The founding fathers came to America from the mother country, bringing with them knowledge of this practice of granting monopolies. In the nearly 150 years of the colonial period preceding the Federal Constitution, the colonies and then the States granted numerous patents for new inventions as well as monopolies to encourage the founding of new industries, including, as the English did, encouragement of setting up in America industries already practiced abroad.[8]

It is not surprising that, when it came to the writing of a Constitution, provision should be incorporated, with no controversy at all, for Congress to make laws for the granting of patents to inventors, or that George Washington should urge its speedy enactment, or that the very first Congress should enact our first Patent Act of 1790.[9]

Then began our patent system. One might describe it as a great experiment which goes on continuously, getting more complex all the time, in which this Institute is playing, for the first time, a vital roll in finding out how the system actually works, as an aid to preserving its basic principles and saving the obvious good that is in it.

---

[6] *Id.* Most of the privileges were for copyrights but a small percentage were for inventions.

[7] The Statute of Monopolies, May 25, 1624, 21 Jac. I, c. 3. For its history see Fox, *supra*, n. 4, Chap. IX, pp. 113-126.

[8] See *JPOS*, *supra*, n. 5, pp. 35-58.

[9] *Id.* pp. 55-62.

*Appendix A*

In this experiment, which involves a mixture of economics, law, technology, and psychology, we still have the centuries-old problem of monopoly power being utilized for socially good and socially bad ends and of deciding which is which.

The greedy nature of some men is such that there are always pressures toward the creation of bad monopolies. Undue preoccupation with countering this pressure, however, has quite blurred the vision of many well-intentioned but not too well-informed people to the good uses monopoly can be put to and to the good that monopoly power can do, properly channeled and not so proscribed as to lose its effective power.

Paradoxically, in the working of the patent system, monopoly often promotes competition. Numerous instances are all around us, wherever two products serving the same general purpose have achieved, with the aid of patent protection, commercial production. And only after such production is there any possibility of market competition.

To this point I have taken note that the ***primary*** distinction between good and bad patent monopolies is that the good patent does not monopolize something the public *already has,* so as to take something away from the public. The invention covered by the good patent must be ***new;*** and so our statutes have always provided, though the provision was not always enforced.[10]

But beyond bare novelty one must go one further and troublesome step to have a sound system and keep the monopoly on the good side.

As we refrain from granting patents on inventions that are not new, we must also refrain from granting patents on those inventions which would arise *spontaneously,* given

---

[10] *Id.* pp. 77-82, 230. Under the 1793 Act, for example, there was no examination for novelty over a period of 43 years. About 10,000 patents issued under that act for terms of 14 years, less than the number issued today in 3 months.

the need or the desire for them, as the yelp of the dog surely follows from stepping on his tail, or with *only a nominal expenditure of time, effort, money or wit*—especially if the invention is one of real utility likely to meet with popular demand.

It was not long after the Patent Act of 1836—in 1850 in fact—that the United States Supreme Court made this clear in the "doorknob case" *Hotchkiss* v. *Greenwood.*[11] What was involved was the trial judge's charge to a jury that if *no more ingenuity or skill was required* to construct the patented doorknob *than was possessed by an ordinary mechanic acquainted with the business,* then the patent was invalid.

The Supreme Court approved the charge. The opinion said: "In other words, the improvement is *the work of the skilled mechanic, not that of the inventor.*" (My emphasis.) The decision made clear that patents are not to be granted on inventions which are no more than what the ordinary mechanic acquainted with the business would produce as a matter of course in the pursuit of his calling. Such mechanics are expected to produce *new* things, such as were involved in that case, which was the attaching of an old clay doorknob to an old metal shank in precisely the same manner that metal doorknobs had been attached to such shanks before. Technically the assembly was *new*, but the court found novelty was not enough.

In referring to "mechanics" in this matter we can take them to be representative of a class—all those with ordinary skill in the various callings, ordinary shoemakers, ordinary chemists, electronic technicians of ordinary skill, etc.

Due to the reasoning of the case, that the new doorknob "was the work of the skillful mechanic, not that of the inventor," what came out of it after 1850, and is still with

---

[11] 52 U.S. 248.

us, was an injection into the law of what has ever since been called the "requirement for invention."

As is usual with a "doctrine" derived from a court opinion, the doctrine persists while the facts out of which it arose are forgotten. The opinion in the first case is quoted to the judge in a second and he does an opinion embroidering on it, his words being quoted in turn and reembroidered and so on.

I think the resulting situation with respect to the law on the "requirement for invention" was well summed up by Judge Learned Hand, who knew as much patent law as any judge ever has, at a Senate hearing in which your then Dean Colclough and I both participated in 1955, as follows:

"You could find nearly anything you liked if you went to the opinions. It was a subject on which judges loved to be rhetorical. * * * patent lawyers * * * like to quote all those things. There are lots of them."[12]

This proliferation of views on what did and did not amount to "invention" went on for 100 years. We were enlightened with the view that "invention" resulted from the exercise of the "inventive faculties" and other circular reasoning. Our present standard text, Walker, now in its seventh edition, says "An invention is the result of an inventive act."[13] Whole books on the patent law were written around such concepts. People collected the statements pro and con in volumes equally divided about in the middle—"invention" on one side, lack of it on the other. Negative and positive tests for detecting its presence evolved. So did exceptions to each test. And patent lawyers selectively quoted all of this mass of material as though it proved something. Judges like Learned Hand found,

---

[12] Hearings pursuant to S. Res. 92, 84th Cong., 1st Sess., on the American Patent System, Oct. 10-12, 1955, p. 113.

[13] Walker on Patents, Deller Ed., Vol. 1, p. 110.

in his words, that "They never seemed to tend toward enlightenment."[14]

This requirement finally evolved into a "*standard* of invention" which the courts pretended was being raised and lowered like an elevator as though it were something tangible. They also proclaimed in all seriousness—and are doing so this very summer—that this "standard" was to be found in the Constitution, where there are only two words on which it could possibly be predicated, the word "inventors" and the word "discoveries."[14a] You really have to be on the Supreme Court to find out a "standard" there because the only way it works is this: if you think the lower court was wrong in sustaining the patent, you proclaim that it applied too low a standard and reverse its decision.[15]

Some judges got it fixed in their minds that if a thing is an "invention" then it is patentable and if it is not patentable then it is not an "invention," not realizing that the same things are invented over and over—by the use of the inventive faculties or by inventive acts or what have you—and although clearly "inventions," their originators being as firmly convinced of it as was Galileo, they are not patentable for want of novelty. So it is customary for

---

[14] Hearings, n. 12 *supra*, p. 113.

[14a] I am not unaware of the statement of the *objective* in Art. I, sec. 8, clause 8, "To promote the progress of * * * useful arts." See "Principles of Patentability," 28 *Geo. Wash. L. Rev.* 393. When Congress exercised its power under that clause and set up a patent system, so long as the *system as a whole* functions to further the Constitutional objective, it would not seem that the statement of the objective could set any "standard" for patentability of any single invention.

[15] See Great Atlantic & Pacific Tea Co., v. Supermarket Equipment Corp., 340 U. S. 147, 87 *USPQ* 303 (1950), where the two concurring opinions below were held to have applied a "standard of invention * * * that is less exacting than that required * * *."

judges to approach all inventions gingerly in their opinions by referring to the, as "alleged" or "supposed" inventions.

All an invention is, however, is something which has been found out, or devised, or discovered. The question today is not what to call it but whether under the statute it is patentable. Hundreds of "real" or "true" inventions, all resulting from "inventive acts" and the exercise of the "inventive faculties," are held unpatentable every day for lack of novelty.

The Patent Office, of course, proceeded on the same basis, and still does so to a dwindling extent, rejecting applications for want of "invention" and granting them when it could be persuaded that "invention" was present. And through it all the patent lawyers and the judges persisted in telling all concerned that "invention" was something which could not be defined, like God! Patent validity came as a matter of grace, from on high. This was a messy state of affairs. The surprising thing is it worked so well. But not well enough.

In 1941 a Commission, appointed by President Roosevelt, and headed by Charles F. Kettering,[16] came out with a report which said:

"One of the greatest technical weaknesses of the patent system is the lack of a definitive yardstick as to *what is invention.* To provide such a yardstick and to assure that the various courts of law and the Patent Office *shall use the same standards,* several changes are suggested. It is proposed that Congress shall declare a national standard whereby [mark these words] *patentability* of *an* invention

---

[16] For a note on who Kettering was and his prolific accomplishments in the fields of business, research and inventing, see "The Kettering Archives" by Eugene B. Jackson, 44 *Jour. Pat. Office Soc.* 331, May 1964.

shall be determined by the objective test as to its advancement of the arts and sciences." [My emphasis.][17]

One apparent thought there was to stop talking about whether a thing is or is not an "invention," to take anything presented as *an* invention, and then to determine its *patentability* according to a standard which Congress was to declare, Congress never having said anything about it up to that time.

For some years nothing came of the Kettering Commission proposal but in the 79th, 80th, and 81st Congresses, from 1945 through 1949, identical bills were pending entitled, unfortunately but almost inevitably, "A bill to declare a national policy for determining invention." Now I have just said that the problem was not really to determine "invention," but to determine the *patentability* of inventions and this matter of language is one of major concern. Kettering got a hold on the distinction, but it keeps fading away like Alice's cat.

People don't think so much as they talk; and when they do think, they tend to think in words, at least about legal abstractions. Words are used to describe things, concepts, and experiences we have in common so that we can communicate. This thing, this concept, this experience every patent examiner, lawyer, and judge had come up against in practice was called the "requirement of invention," or just "invention"—the undefinable something or other that has to be there. This proves to be a cliché, meaningless though it is, that is hard to break away from. I taught for many years, and presumably my students learned, that the prerequisites to patentability were novelty, utility, and invention. There was nothing else to teach. Thinking and its concomitant words had not progressed beyond that point in the '30s and '40s. But today they have. Any current

[17] Report of National Patent Planning Comm., June 18, 1943, H. Doc. 239, 78th Cong., pp. 6, 10.

textbook and most cases, you will find, use the old terminology. But it isn't true any more and hasn't been for eleven and a half years—in my opinion, that is.

My not believing in ghosts or angels doesn't mean, *in law,* that there are no ghosts or angels, because if you think there are, and are frightened or informed by them, then they exist. As long as judges say there is a requirement for "invention," and many still do, then there is one. If you take a patent into court and the judge invalidates it for want of "invention" you *know* there is one. But why am I saying there is none? Am I talking theory or law; if law, then what kind of law? Or am I talking nonsense?

The outcome of those bills to determine invention, and one or two other bills, was that Congress got interested in revising and codifying the patent law and did so.[17a] In the new law (Title 35 U.S.C.) is a section, 103, described at the time by those who wrote it, at least in one place, as "incorporating a requirement for invention."[18] It was also described more carefully and accurately elsewhere[19] as providing a "*condition* which exists in our law and has existed for more than 100 years * * * by reason of decisions of the courts." (My emphasis.) And that "condition" is described in the title of this new section 103 as one for the existence of "non-obvious subject matter." The addition of section 103 was stated in the House Report on the bill[20] to be *one of the two major changes or innovations in the statute.*

---

[17a] See Giles S. Rich, "Congressional Intent—Or, Who Wrote the Patent Act of 1952?", in *Patent Procurement and Exploitation,* BNA 1963, pp. 61-78.

[18] House Report No. 1923, 82nd Cong., 2nd Sess., to accompany H.R. 7794, p. 5.

[19] *Id.* p. 7.

[20] *Id.* p. 5.

*Appendix A*

What section 103 itself says is that what is patented must *not* have been *obvious* to one of *ordinary* skill in *the art involved,* at the *time* the invention was made. The parallel with what would be expected of the "ordinary mechanic acquainted with the business" in the "doorknob case" should be clear.

This is not a "standard of invention"; and it is not called a "requirement of invention." The presence or absence of "invention" is not mentioned. The use of the term "invention" was, in fact, carefully avoided with a view to making a fresh start, free of all the divergent court opinions and rhetorical pronouncements about "inventions."[21] And in doing that it was contemplated, as the House Report states,[22] that "This section should have a stabilizing effect and minimize great departures which have appeared in some cases."

As has been pointed out by one of the drafters of that section, Mr. Federico, in his Commentary,[23] what section 103 was gunning for was

"* * * some modification * * * in the direction of moderating the extreme degrees of strictness exhibited in a number of judicial opinions over the past dozen or so years; that is, that some change of attitude more favorable to patents is hoped for. This is indicated by the language used in section 103 as well as by the general tenor of remarks of the Committees in the reports and particular comments."

The real vice or inadequacy of the judge-made requirement for "invention" was in the truism Mr. Federico also restated, "the so-called standard of invention * * * is

---

[21] The writer speaks from personal knowledge as one of the drafters.

[22] Note 18, at p. 7.

[23] "Commentary on the New Patent Act," by P. J. Federico, 1954, published in Vol. 1 of 35 U.S.C.A.

an unmeasurable quantity having different meanings for different persons." It left every judge practically scott-free to decide this often controlling factor according to his personal philosophy of what inventions should be patented, whether or not he had any competence to do so or any knowledge of the patent system as an operative socioeconomic force. This was too great a freedom because it involves national policy which should be declared by Congress, not by individual judges or even groups of judges on multiple-judge courts. In section 103 Congress made such a policy declaration. It did not there declare what should constitute "invention." It was a statement of something to take place of this vague concept. And it was made in the face of judicial declarations, made in the *absence* of a statute, which Congress expressly desired to modify.

I would like to inject a new term into the language so we can discuss the matter rationally. I would like to call it the THIRD REQUIREMENT of patentability. The statute sets out all the requirements in the clearest possible form. Section 101 says inventions must be *new* and *useful,* requirements one and two; section 102 defines novelty; and section 103 lays down the *third requirement.* I repeat its clear-cut title: *"Conditions for patentability; non-obvious subject matter."*

Upon examination in the Patent Office or upon adjudication in court, under the statute, when novelty, utility, and unobviousness as defined in section 103 are found to exist, there is *patentability* and *that is the end of the matter.* An examination for the presence or absence of "invention," or of precedents on that muddy issue, is not called for and is not proper. It is a work of supererogation. It illustrates, furthermore, a failure to grasp the meaning of the statutory provisions. There is no such prerequisite in the statutory law.

*Appendix A*

When, as is the case with the "requirement for invention," the century's accumulation of judicial precedents range from A to Z and Congress, looking at the situation under the guiding light of Kettering's statement that *this is no yardstick and the greatest technical weakness of the patent system,* determines to make a yardstick and says the measure shall be "M", right in the middle of the alphabet, it behooves everyone concerned with administering that law to follow the measure "M" and to stop flitting about arbitrarily from A to Z, lighting upon that letter which seems most appealing.

But what do we have today? A host of lawyers, examiners and judges all doing their level best to follow the law as Congress wrote it? Anything but that! What we have today is a mish-mash, and that is a nice old English term, older than the 1624 Statute of Monopolies. Why do we have a mish-mash?

First, a century of thinking and writing about a phenomenon in one set of nomenclature is a hard thing to overcome. Also a lot of people go on administering the patent laws and practicing under them without bothering to read the revision of them, so they are not aware that there has been a change.

Second, by hindsight it is apparent that those most intimately concerned with the writing and expounding of the new patent act in 1952, themselves brought up in the "requirement for invention" tradition (and I speak as one of them) did a very poor job of informing the public what it was they had done. One reason for that was that, on the average, their own comprehension of what they had done was not too clear. Remember, they were all of the school that "invention" *could not* be defined and there they were, trying to put a provision on that very subject into the statute. In going as far as seemed to be possible in that direction, they knew they were not making a *definition* but rather a *statement of policy,* a *specific required*

*approach* to a difficult problem, which approach they thought would stop some of the nonsense derogatory of the patent system that had been going on. In pursuit of that objective, the drafters and Congress did one thing, by way of a statement of policy to counteract a judicial trend, which has had a clear-cut effect. Following a phrase casually dropped by the Supreme Court in *Cuno* v. *Automatic,*[24] in 1941, that "the new device, however useful it may be, must reveal the flash of creative genius," some courts took off on a quest for such a flash and, not finding it, invalidated patents. The last sentence of section 103 stopped this abruptly with the legislative command: "Patentability shall not be negatived by the manner in which the invention was made." But the judicial reaction to the first sentence,[25] in contrast, got to be all fouled up.

Third, the members of the bar have a lot to answer for in creating and perpetuating the mish-mash because it is they who, desiring to make use of some of the extreme cases antedating the patent act to invalidate patents in litigation, played down section 103 and early in its life persuaded a number of courts that it made no change whatever but was "mere codification."[25a] They are now

---

[24] The Cuno Engineering Corp. v. The Automatic Devices Corp., 314 U.S. 84, 51 *USPQ* 272 (1941).

[25] § 103. *Conditions for patentability; non-obvious subject matter*

A patent may not be obtained though the invention is not identically disclosed or described as set forth in section 102 of this title, if the differences between the subject matter sought to be patented and the prior art are such that the subject matter as a whole would have been obvious at the time the invention was made to a person having ordinary skill in the art to which said subject matter pertains. Patentability shall not be negatived by the manner in which the invention was made.

[25a] A little reflection should show that when judicial precedents constituting the "law" range from the very liberal to the most strict, it is a patent absurdity to speak of a statute taking a middle ground as a "codification" of existing law. See note 17a, *supra.*

paying more attention to section 103 as they learn that it can help them when they are on the other side, but they are learning slowly and my generation of lawyers, at least, is still talking, out of habit, in terms of "invention." Just listen to them!

Find me a trial lawyer for an infringer who will not urge on the court, as the existing test for "invention," the views expressed by the Justices of the Supreme Court in *A & P* v. *Supermarket*, in 1950,[26] two years before the effective date of section 103, and I will joyfully transfer my Kettering Award to him. He would deserve it more than I do. I have no clients. Herein lies a grave defect in the development of sound law through adversary proceedings.

Fourth, in the legislature the mish-mash has been described in detail, up to 1957 (the first 5 years of the act) in Senate Committee Study No. 7. What is its title? "Efforts to Establish a Statutory Standard of Invention."[27] The Senate Patent Subcommittee is still striving to bring about a higher degree of uniformity in the courts, in the various groups of the Patent Office, and between the two organizations, but in what terms does it do its own thinking? The subcommittee's annual Report (No. 107), April 3, 1963, is concerned about the "Patent Office 'standard of invention'" and refers to the development by that office of a "policy statement pertaining to standards of invention." The report for the next year (No. 1018), May 1, 1964, again refers to the need to eliminate differences within the Patent Office and between it and the courts "concerning the standard of invention." Meanwhile, ap-

---

[26] *Supra*, n. 15, 340 U.S. 147. This was a case preeminently in the minds of the drafters of the 1952 Patent Act, having been decided during the writing of the first drafts. See note 17a.

[27] Study of the Subcommittee on Patents, Trademarks and Copyrights of the Committee on the Judiciary, U. S. Senate, 85th Cong., 1st Sess., pursuant to S. Res. 95, Study No. 7 (1958).

parently without the committee's knowledge, the Patent Office Academy has been teaching that there is no "standard of invention," that "invention" is meaningless, and that the prerequisite is as stated in section 103. Might it not do some good and help to achieve the uniformity the subcommittee so much desires if its own members, and staff, could convince themselves, in spite of what uninformed judges have said, that the 1952 Patent Act was intended by their fellow legislators to *replace* the "standard of invention," which never was a standard, with a requirement of unobviousness to a particular kind of person at a particular time?

Amid the confusion, there are some encouraging signs in the courts. During the first few years after the 1952 act, many courts took the position that Congress really had done *nothing* in enacting section 103 and went about their old business of looking for "invention." Then in 1955 came Judge Learned Hand's *Lyon* v. *Bausch & Lomb*[28] opinion and in 1960 his *Reiner* v. *I. Leon*[29] opinion, both of which realistically appraised and appreciated what section 103 had done, namely, to restore the law to what it had been 20 or 30 years earlier and, as he said, "to change the slow but steady drift of judicial decision that had been hostile to patents * * *." In the former opinion he remarked that " 'invention' became perhaps the most baffling concept in the whole catalogue of judicial efforts to provide postulates for indefinitely varying occasions." In the latter he said "It is not for us [the judiciary] to decide what 'discoveries' shall 'promote the progress of science and the useful arts' sufficiently to grant any 'exclusive right' of [to?] inventors. Nor may we approach the

---

[28] Lyon v. Bausch & Lomb Optical Co., 224 F. 2d 530, 106 *USPQ* 1 (2d Cir. 1955).

[29] Reiner et al. v. I. Leon Co., 285 F. 2d 501, 128 *USPQ* 25 (2d Cir. 1960).

interpretation of § 103 * * * with a predetermined bias." While saying "The test laid down [in 103] is indeed misty e. ugh," he was able, with the evidence provided, to follow it. Certiorari was denied in both of these cases. In both cases the patents were sustained. The Supreme Court could easily have upset him had it wanted to. In fact, Judge Hand remarked to me and others at that Senate hearing in 1955[30] "Oh, they must take it," referring to *Bausch & Lomb.* Later during the hearing he testified,[31] "whether we were right in construing it [§ 103] as meaning that the old rules were to apply, remains to be seen. I hope the case will go up." From the viewpoint of the writers of the law, he was very right!

Last April (1964) the Fourth Circuit Court of Appeals in *Marvel* v. *Bell*,[32] which in 1954 said 103 merely codified the law, came to the conclusion, after reading a number of cases which "have undertaken to comprehensively set forth the standard of invention to be used as a test," that

"When the mass of verbiage has been distilled, however, we have little more to guide us than the test which is incorporated in section 103 * * *," and when in search of the "objective criteria of [un]obviousness." Perhaps, next time, that court will take the final step and *start* with the statute, ignoring the "mass of verbiage" it replaces. It seems a logical place to start, especially since it was intended to displace some of those cases in which the verbiage appears.

Last May (1964) the Sixth Circuit Court of Appeals, in *Monroe Auto Equipment Co.* v. *Heckethorn Mfg. Co.*,[33] said, "It is virtually a practical impossibility to define ade-

---

[30] *Supra*, n. 12.

[31] *Id.* p. 120.

[32] 330 F. 2d 164, 141 *USPQ* 269.

[33] 141 *USPQ* 553.

quately that abstraction which we call invention,"[34] and then, in spite of that difficulty, said "we must have objective references and a place from which to start. For this we turn to the statute * * * § 103." A very good place to start! But then the court came to a very unnecessary conclusion "that invention is synonymous with unobviousness. Thus to say that a device lacks invention and that it is obvious is to state that the same legal proposition in two ways."[35] It concluded that while obviousness "does not begin to solve the problem," it "gives us a touchstone for the contextual meaning of invention." It also concluded that in a patent case decision is arrived at by three steps: a determination of what the prior art was, what the pat-

---

[34] The full quotation is (141 *USPQ* at 553):

> It is virtually a practical impossibility to define adequately that abstraction which we call invention. Long ago the Supreme Court said: "The truth is the word cannot be defined in such a manner as to afford any substantial aid in determining whether a particular device involves an exercise of the inventive faculty or not. In a given case we may be able to say that there is invention of a very high order. In another we can see that there is lacking that impalpable something which distinguishes invention from simple mechanical skill." McClain v. Ortmayer, 141 U.S. 419, 427 [Nov. 2, 1891]. This court consistently has echoed this view. [Cases cited.]

[35] A case was cited for this proposition, in re Jacoby, Jr., 309 F. 2d 513, 135 *USPQ* 317, 50 *CCPA* 734, in which the opinion was written by the present author. The Patent Office Board of Appeals had said the claimed invention "must be unobvious and involve invention." In a footnote to a reluctant but needed quotation of that statement the writer said:

> To add to the statement that it must be unobvious, as required by 35 U.S.C. 103, the further statement that it must "involve invention" is merely to state the same legal proposition in two different ways. It would seem to suffice to state it once, and that, preferably, in the words of the statute.

It should be clear that this was intended to put the proposition, developed more forcefully in the present paper, as gently as possible and that it was *not* intended to suggest that "invention" and "unobviousness" as provided in section 103 are alternative *equivalents* for determining patentability, which they are not.

entee has made, and whether it would have been obvious, viewing the prior art from the time just prior to when the patented device was made. That is just what section 103 says! It is beginning to take hold and the next step will be to realize, what should be so clear, that when the unobviousness question has been determined, there is nothing more to do and the question of "invention" can be forgotten.[36]

---

[36] Along with it can be forgotten the "complexities" of another issue wrestled with by the court in deciding whether "unobviousness" is a question of law or fact. Compare Armour & Co. v. Wilson & Co., 274 F. 2d 143, 124 *USPQ* 115 (7th Cir. 1960). The presence or absence of "invention" before 1953 was always, in my judgment, the determination of an issue of public policy—what inventions *should* be patented. As such it is a "question of law." This policy has now been legislatively expressed in section 103. In that section (note 25, *supra*) the following potential issues of fact appear: (1) What are the *differences* between "the invention" and "the prior art"? (2) What is disclosed by the prior art presumed to have been available to the inventor? (3) What was the level of ordinary skill in the art at the time the invention was made? (4) Other fact issues relating to *circumstances* indicative of the presence or absence of obviousness, traditionally taken into account in determining "invention," such as long-felt need, immediate copying, sudden displacement of existing practices or devices, difficulty of achievement, failure of others, etc. Once these *facts* have been assembled, there remains the ultimate statutory requirement of unobviousness, the third requirement for patentability, which becomes a matter of statutory *application* and as such must be a question of law. As the court concluded in the *Armour & Co.* case, *supra*, "The development of the factual content necessary to statutory construction is a question of fact." It may be *several* such questions, however. As the court did *not* conclude in *Armour & Co.*, after the fact issues are settled, the determination of unobviousness is necessarily a legal conclusion arising out of the facts, pursuant to the statute—a question of law.

The *Armour* case concluded (1960), in the separate opinion devoted to the fact or law question, that after the facts were settled, "We examine the *standard of invention* applied to these facts as a question of law." (My emphasis.) But under section 103 there is no "standard of invention." The directive of the statute is to determine whether the invention "would have been obvious" on the basis of the *differences*, the *ordinary* skill, and as of the *time* of invention. *These* are the factors, and these alone, by which courts are to determine the existence of the third requirement. Leastwise, that is what the statute provides.

I cite these as straws in the wind. A study in the *Columbia Law Review* in 1963[37] concludes that "nothing indicates that the courts are moving toward a common interpretation of the statute." I am not so sure. I say give them time. They are stirring like live cocoons. We have only had this statute for a dozen years and the judges who have been there that long, as many of them have, are still indoctrinated with the old "standard of invention" terminology they learned from the old patent lawyers and the old textbooks. There will be new editions of all three in due course.

I might mention the Court of Customs and Patent Appeals which has been turning out a consistent stream of opinions, for at least the eight consecutive years of which I have personal knowledge, strictly applying the obviousness formula of section 103 to determine *patentability*, not the presence of invention, and slowly but surely warping the Patent Office into basing its actions on the statute. The results are beginning to show in the actions and board opinions we review. I believe we have invaded the Patent Office Academy. The Solicitor's office writes its briefs in the language of the statute.

Assistant Secretary of Commerce Hollomon made a speech in New York in March, 1964, in which he is reported to have said that he "believes that the courts and the Patent Office should both follow the same standard of *patentability.*" This would be nice but is obviously impossible until one or the other of them decides to standardize. A good place to begin would be the Patent Office, a lot easier than in the courts. Dr. Hollomon further said "that a standard of *patentability* should be more definitely set forth." He is to be complimented on his terminology, in not talking about a "standard of invention," but I think

---

[37] "The Standard of Patentability—Judicial Interpretation of Section 103 of the Patent Act," 63 *Col. L. Rev.* 306-325 (Feb. 1963).

we should experiment with *using* the section 103 standard before we try to create another one. I find it very workable. It was a harder job to get it than he may imagine and in twelve years no better one has been proposed. The "criteria which may be worked out," referred to in the Revision Note to section 103, have never materialized. I doubt they ever will.

I have had two practical suggestions in the back of my mind for some time. One is to have sort of wallpaper border printed up to run around all the patent examiner's rooms on which the words NEW USEFUL UNOBVIOUS PATENTABLE are repeated endlessly. This could be designed into the new Patent Office building. Most inscriptions on the present Patent Office are not very useful. They might put on the Constitutional clause so people could see it contains no *standard* for determining patentability.

The other suggestion—and this one is more serious—is based on the discovery that lecture courses are given for new and other Federal judges from time to time on how to be a judge, printed in books and given to the judges, compliments of the West Publishing Company. This Institute or some other disinterested party or organization should prepare a lecture on the basic elements of patent law in up-to-date terminology as used in Title 35 U.S.C. and see to it that the Federal judges get it. Even a glossary would help, in which it would appear that the "requirement for invention" became obsolete in 1953 by an act of Congress, along with many prior court opinions discussing it, being replaced by unobviouness as defined in 103 as the THIRD REQUIREMENT FOR PATENTABILITY. By limiting the lecture to the terms of the statute and their clear meanings I do not see how the bar could object and many judges would be grateful.

I was recently discussing this subject with a young patent lawyer, urging that we should all stop talking about the

"standard of invention." She said, "What difference does it make?" That is a fair question which has to be answered, and with my present answers I will end:

The differences it will make—the reasons why we *must* learn to make this change—are these, among others:

—Until we stop talking about a "requirement for invention," it will never be clear that THE THIRD REQUIREMENT is that stated in section 103 *and no other;* that when 103 has been complied with, there is no further and different requirement called "invention"; that compliance with 103 is the policy judgment of Congress on how to bring the invention within the Constitutional purpose.

—Because looking for the presence of "invention" in addition to compliance with 103 defeats the legislative purpose.

—Because talking about both unobviousness and "invention" as different things leads to weird and confused thinking.

—Because testing patentability by the presence of "invention" gives judges and the Patent Office too much freedom to decide patentability of new and useful inventions on the basis of a personal view as to what *should* be patentable, instead of accepting the view of the legislature on that question of national policy.

—Because it will get all those concerned with the administration of the patent system—Patent Office, Courts, and the bar—speaking the same language, a sine qua non to the communication of intelligence.

—Because you cannot use "invention" as both an abstract noun and a concrete noun in the same statute or opinion without confusion. The invention is the thing that has been produced by the "inventor." There will be muddy thought as long as one has to say: this invention (in the concrete sense) is unpatentable because it is not an invention (in the abstract sense).

—Because it will do more than anything else I can think of to bring about that long-sought-for greater uniformity of opinion on patentability.

—Because it makes the prerequisites to patentability intelligible.

As I hope I have been.

To quote Learned Hand—that well-named judge—once more, maybe I am only "shovelling smoke." Time alone will tell.

(Applause)

FILE COPY

Office-Supreme Court, U.S.
FILED
MAR 30 1963
JOHN F. DAVIS, CLERK

IN THE

# SUPREME COURT OF THE UNITED STATES

OCTOBER TERM, 1964.

## No. [redacted] 11

WILLIAM T. GRAHAM and GRAHAM PLOW, INC.,
*Petitioners*

vs.

JOHN DEERE COMPANY OF KANSAS CITY and
DEERE & COMPANY,
*Respondents.*

ON WRIT OF CERTIORARI TO THE UNITED STATES COURT OF APPEALS FOR THE EIGHTH CIRCUIT.

## BRIEF ON BEHALF OF RESPONDENTS

W. W. GIBSON AND
S. TOM MORRIS,
630 Amarillo Building,
Amarillo, Texas,

AND

THOMAS E. SCOFIELD,
1325 Rialto Building,
Kansas City 6, Missouri,
*Attorneys for Respondents.*

S. L. MIMMERMAN, INC., 1108 Oak Street, Kansas City, Mo. 64106, HAmilton 1-[illegible]

## SUBJECT INDEX


OPINIONS OF THE COURTS BELOW ..... 1
JURISDICTION ..... 2
CONSTITUTIONAL PROVISIONS, STATUTES AND RULES INVOLVED ..... 2
QUESTIONS PRESENTED FOR REVIEW ..... 5
STATEMENT OF THE CASE ..... 6
- The Patent ..... 7
- Background and Development of 798 ..... 9
- The Prior Art ..... 12
  - Dunbar, Cobb and Rix ..... 14
  - Petersen ..... 15
  - Traeger ..... 15
  - Graham 811 ..... 16
  - Jeoffroy SC-580 ..... 16
  - Glencoe ..... 17
  - The Prior Art As a Whole ..... 18
- Patent Office History of 798 ..... 18
- Litigation History ..... 21
  - Graham v. Jeoffroy ..... 21
  - Graham v. Cockshutt ..... 23
  - Graham v. Deere ..... 24

SUMMARY OF THE ARGUMENT ..... 26
THE ARGUMENT ..... 27
- INTRODUCTION ..... 27
- POINT I. The Court of Appeals for the Eighth Circuit correctly held Patent No. 2,627,798 invalid ..... 28
  - A Combination of Old Mechanical Elements .. 28
  - Obvious Modifications ..... 29
  - Obvious Consequences ..... 32
    - Wear Reduction ..... 32
    - Shank Flex ..... 34
  - Undisclosed and Unclaimed Function ..... 38
  - Presumption of Validity ..... 42
  - Deere's Clamps and Conduct ..... 43

Validity Crutches ..... 45
Summation of Validity ..... 45
POINT II. Section 103 did not materially change the standards of "invention" or "patentability" established by this Court and the Court of Appeals for the Eighth Circuit applied correct standards ..... 47
Judicially Established Standards ..... 48
Section 103 and Its Effect ..... 62
The First Sentence ..... 63
The Second Sentence ..... 67
Constitutionality of Section 103 ..... 70
798 Revisited ..... 71
CONCLUSION ..... 72

**Table of Cases Cited**

*Altoona Publix Theatres, Inc.* v. *American Tri-Ergon Corp.*, 294 U.S. 477, 79 L. Ed. 1005, 55 S. Ct. 455 (1935) ..... 33, 52
*Aro Manufacturing Co.* v. *Convertible Top Replacement Co.*, 377 U.S. 476, 12 L. Ed. 2d 457, 84 S. Ct. 1526 (1964) ..... 65
*Atlantic Works* v. *Brady*, 107 U.S. 192, 27 L. Ed. 438, 2 S. Ct. 225 (1883) ..... 46, 47, 49
*Concrete Appliances Co.* v. *Gomery*, 269 U.S. 177, 70 L. Ed. 222, 46 S. Ct. 42 (1925) ..... 50
*Cornell* v. *Adams Engineering Co.*, 258 F.2d 874 (5th Cir. 1958) ..... 42
*Cuno Engineering Corp.* v. *Automatic Devices Corp.*, 314 U.S. 84, 86 L. Ed. 58, 62 S. Ct. 37 (1941) ..... 47, 54
*Day-Bright Lighting, Inc.* v. *Sandee Mfg. Co.*, 286 F.2d 596 (7th Cir. 1960) ..... 42
*Elliott & Co.* v. *Youngstown Mfg. Co.*, 181 Fed. 345 (3rd Cir. 1910) ..... 42
*General Motors Corp.* v. *Estate Stove Co.*, 203 F.2d 912 (6th Cir. 1953) ..... 64
*Graham* v. *Cockshutt Farm Equipment*, 256 F.2d 358 (5th Cir. 1958) ..... 6, 23

*Graham* v. *John Deere Company of Kansas City*, 216 F. Supp. 272, 137 U.S.P.Q. 864 (D.C. W.D. Mo., W.D. 1963) ..... 1, 6

*Great A. & P. Tea Co.* v. *Supermarket Equipment Corp.*, 340 U.S. 147, 95 L. Ed. 162, 71 S. Ct. 127 (1950) ..... 45, 47, 58, 70

*Hotchkiss* v. *Greenwood*, 52 U.S. (11 How.) 248, 13 L. Ed. 683 (1850) ..... 48

*Interstate Rubber Products Corp.* v. *Radiator Specialty Co.*, 214 F.2d 546 (4th Cir. 1954) ..... 64

*Jacuzzi Bros.* v. *Berkeley Pump Co.*, 191 F.2d 632 (9th Cir. 1951) ..... 42

*Jeoffroy Mfg.* v. *Graham*, 206 F.2d 772 (5th Cir. 1953) .. 16

*Jeoffroy Mfg.* v. *Graham*, 219 F.2d 511 (5th Cir. 1955) ..... 6, 22, 38

*John Blue Co.* v. *Dempster Mill Mfg. Co.*, 275 F.2d 668 (8th Cir. 1960) ..... 64

*John Deere Company of Kansas City* v. *Graham*, 333 F.2d 529, 142 U.S.P.Q. 243 (8th Cir. 1964) ..... 1, 6, 31

*Jungersen* v. *Ostby & Martin Co.*, 335 U.S. 560, 93 L. Ed. 235, 69 S. Ct. 269 (1949) ..... 45, 58

*Kendall* v. *Winsor*, 62 U.S. 322, 16 L. Ed. 165 (1859) .. 47

*Lincoln Engineering Co.* v. *Stewart-Warner Corp.*, 303 U.S. 545, 83 L. Ed. 1008, 58 S. Ct. 662 (1937) ..... 41

*L. S. Donaldson Co.* v. *LaMaur, Inc.*, 299 F.2d 412 (8th Cir. 1962) ..... 42

*Lyon* v. *Bausch & Lomb Optical Co.*, 224 F.2d 530 (2nd Cir. 1955) ..... 64

*Mercoid Corp.* v. *Mid-Continent Investment Co.*, 320 U.S. 661, 88 L. Ed. 376, 64 S. Ct. 268 (1944) ..... 65

*O'Leary* v. *Liggett Drug Co.*, 150 F.2d 656 (6th Cir. 1945) ..... 42

*Pacific Contact Laboratories* v. *Solex Laboratories*, 209 F.2d 529 (9th Cir. 1954) ..... 67, 68

*Reckendorfer* v. *Faber*, 92 U.S. (2 Otto.) 347, 23 L. Ed. 719 (1876) ..... 49

*Reiner* v. *I. Leon Co.*, 285 F.2d 501 (2nd Cir. 1960) .... 64

*R. Hoe & Co.* v. *Goss Printing Press Co.*, 30 F.2d 271 (2nd Cir. 1929) ..... 42
*R. M. Palmer Co.* v. *Ludens, Inc.*, 236 F.2d 496 (3rd Cir. 1956) ..... 68
*Sears, Roebuck & Co.* v. *Stiffel Co.*, 376 U.S. 225, 11 L. Ed. 661, 84 S. Ct. 784 (1964) ..... 47
*Sinclair & Carroll Co.* v. *Inter-Chemical Corp.*, 325 U.S. 327, 89 L. Ed. 1644, 65 S. Ct. 1143 (1945) ..... 47
*Stanley Works* v. *Rockwell Mfg. Co.*, 203 F.2d 846 (3rd Cir. 1953) ..... 64
*Toledo Pressed Steel Co.* v. *Standard Parts, Inc.*, 307 U.S. 350, 83 L. Ed. 1334, 59 S. Ct. 897 (1939) ..... 45, 53
*Wasserman* v. *Burgess & Blacher Co.*, 217 F.2d 402 (1st Cir. 1954) ..... 64

**Statutes Cited**

U. S. Const., Art. I, Sec. 8, Cl. 8 ..... 2, 47, 70
35 U.S.C. §101, 66 Stat. 797 ..... 2
35 U.S.C. §102, 66 Stat. 797 ..... 2, 28
35 U.S.C. §103, 66 Stat. 798 ..... 3, 27, 62, 64, 65, 67, 70
35 U.S.C. §112, 66 Stat. 798 ..... 4, 40
35 U.S.C. §271, 66 Stat. 811 ..... 65
35 U.S.C. §282, 66 Stat. 812 ..... 4, 42
Rule 52(a), Fed. R. Civ. Pro. ..... 4, 70

**Publications Cited**

98 Cong. Rec. 9096, 82nd Cong., 2nd Sess. (July 3, 1952) ..... 66
98 Cong. Rec. 9323, 82nd Cong., 2nd Sess. (July 4, 1952) ..... 66-67
House Report No. 1923, 82nd Cong., 2nd Sess. (1952) ..... 63
Journal of the Patent Office Society, Centennial Number, "History of the Patent Office", July 1936, Vol. 18, p. 230 ..... 57
Journal of the Patent Office Society, December, 1964, Vol. 46, p. 855, Rich, "The Vague Concept of 'Invention' as Replaced by Sec. 103 of the 1952 Patent Act" ..... 68, 70
Senate Report No. 1979, 82nd Cong., 2nd Sess. (1952) 63

IN THE

# SUPREME COURT OF THE UNITED STATES

OCTOBER TERM, 1964.

## No. 580

WILLIAM T. GRAHAM and GRAHAM PLOW, INC.,
*Petitioners,*

vs.

JOHN DEERE COMPANY OF KANSAS CITY and DEERE & COMPANY,
*Respondents.*

ON WRIT OF CERTIORARI TO THE UNITED STATES COURT OF APPEALS FOR THE EIGHTH CIRCUIT.

## BRIEF ON BEHALF OF RESPONDENTS

### OPINIONS OF THE COURTS BELOW

The opinion of the District Court (R. 17-32) is reported, *Graham* v. *John Deere Company of Kansas City*, 216 F. Supp. 272, 137 U.S.P.Q. 864 (D.C., W.D. Mo., W.D. 1963).

The opinion of the Court of Appeals (R. 923-933) is reported, *John Deere Company of Kansas City* v. *Graham*, 333 F.2d 529 42 U.S.P.Q. 243 (8th Cir. 1964).

## JURISDICTION

Jurisdiction is not challenged.

## CONSTITUTIONAL PROVISIONS, STATUTES AND PROCEDURAL RULES INVOLVED

### Constitution of the United States

Article I, Section 8, Clause 8.

The Congress shall have the power

To promote the Progress of Science and useful Arts, by securing for limited Times to Authors and Inventors the exclusive Right to their respective Writings and Discoveries; * * *.

### Statutes of the United States

Title 35, U.S.C. (Public Law 593, 82nd Congress, 2nd Session, Chapter 950, 66 Stat. 792, approved July 19, 1952).

§ 101. *Inventions patentable*

Whoever invents or discovers any new and useful process, machine, manufacture, or composition of matter, or any new and useful improvement thereof, may obtain a patent therefor, subject to the conditions and requirements of this title. July 19, 1952, c. 950, § 1, 66 Stat. 797.

§ 102. *Conditions for patentability; novelty and loss of right to patent*

A person shall be entitled to a patent unless—

(a) the invention was known or used by others in this country, or patented or described in a printed publication in this or a foreign country, before the invention thereof by the applicant for patent, or

(b) the invention was patented or described in a printed publication in this or a foreign country or in public use or on sale in this country, more than one year prior to the date of the application for patent in the United States, or

(c) he has abandoned the invention, or

(d) the invention was first patented or caused to be patented by the applicant or his legal representatives or assigns in a foreign country prior to the date of the application for patent in this country on an application filed more than twelve months before the filing of the application in the United States, or

(e) the invention was described in a patent granted on an application for patent by another filed in the United States before the invention thereof by the applicant for patent, or

(f) he did not himself invent the subject matter sought to be patented, or

(g) before the applicant's invention thereof the invention was made in this country by another who had not abandoned, suppressed, or concealed it. In determining priority of invention there shall be considered not only the respective dates of conception and reduction to practice of the invention, but also the reasonable diligence of one who was first to conceive and last to reduce to practice, from a time prior to conception by the other. July 19, 1952, c. 950, § 1, 66 Stat. 797.

§ 103. *Conditions for patentability; non-obvious subject matter*

A patent may not be obtained though the invention is not identically disclosed or described as set forth in section 102 of this title, if the differences between the subject matter sought to be patented and the prior art are such that the subject matter as a whole would have been obvious at the time the invention was

made to a person having ordinary skill in the art to which said subject matter pertains. Patentability shall not be negatived by the manner in which the invention was made. July 19, 1952, c. 950, § 1, 66 Stat. 798.

§ 112. *Specification*

The specification shall contain a written description of the invention, and of the manner and process of making and using it, in such full, clear, concise, and exact terms as to enable any person skilled in the art to which it pertains, or with which it is most nearly connected, to make and use the same, and shall set forth the best mode contemplated by the inventor of carrying out his invention.

The specification shall conclude with one or more claims particularly pointing out and distinctly claiming the subject matter which the applicant regards as his invention.

An element in a claim for a combination may be expressed as a means or step for performing a specified function without the recital of structure, material, or acts in support thereof, and such claim shall be construed to cover the corresponding structure, material, or acts described in the specification and equivalents thereof. July 19, 1952, c. 950, § 1, 66 Stat. 798.

§ 282. *Presumption of validity; defenses*

A patent shall be presumed valid. The burden of establishing invalidity of a patent shall rest on a party asserting it. * * * July 19, 1952, c. 950, § 1, 66 Stat. 812.

**Federal Rules of Civil Procedure**

*Rule 52. Findings by the Court.*

(a) EFFECT. In all actions tried upon the facts without a jury or with an advisory jury, the court shall find the facts specially and state separately its conclu-

sions of law thereon and judgment shall be entered pursuant to Rule 58; and in granting or refusing interlocutory injunctions the court shall similarly set forth the findings of fact and conclusions of law which constitute the grounds of its action. Request for findings are not necessary for purposes of review. Findings of fact shall not be set aside unless clearly erroneous, and due regard shall be given to the opportunity of the trial court to judge of the credibility of the witnesses. The findings of a master, to the extent that the court adopts them, shall be considered as the findings of the court. If an opinion or memorandum of decision is filed, it will be sufficient if the findings of fact and conclusions of law appear therein. Findings of fact and conclusions of law are unnecessary on decisions of motions under Rules 12 or 56 or any other motion except as provided in Rule 41(b).

## QUESTIONS PRESENTED FOR REVIEW

There is only one ultimate question presented for review:

1. Did the Court of Appeals for the Eighth Circuit err in holding U.S. Patent No. 2,627,798 invalid?

There are subsidiary questions:

2. Did the Court of Appeals apply correct standards of "invention" or "patentability"?

3. Did the Court of Appeals err in ruling that the trial court's findings of non-obvious subject matter or invention were clearly erroneous?

4. Did the Court of Appeals err in ruling that the presumption of validity was overcome?

## STATEMENT OF THE CASE

Petitioners' statement is, in our opinion, inaccurate in some respects and it does not furnish sufficient factual background for adequate review. We, therefore, submit a full statement.

Plaintiffs-Petitioners, WILLIAM T. GRAHAM (the patent owner) and GRAHAM PLOW, INC. (a licensee), hereinafter called Graham, sued the Defendants-Respondents, JOHN DEERE COMPANY OF KANSAS CITY and DEERE & COMPANY, hereinafter called Deere, for infringement of United States Patent No. 2,627,798. The District Court held the patent valid and infringed (R. 17-32), *Graham* v. *John Deere Company of Kansas City*, 216 F. Supp. 272, 137 U.S.P.Q. 864 (D.C., W.D. Mo., W.D. 1963). The Court of Appeals held the patent invalid and reversed without passing on the question of infringement (R. 923-933), *John Deere Company of Kansas City* v. *Graham*, 333 F.2d 529, 142 U.S.P.Q. 243 (8th Cir. 1964).

Certiorari was granted no doubt to resolve the square conflict with the decisions of the Court of Appeals for the Fifth Circuit in *Jeoffroy Mfg.* v. *Graham*, 219 F.2d 511 (5th Cir. 1955), and *Graham* v. *Cockshutt Farm Equipment*, 256 F.2d 358 (5th Cir. 1958), holding the patent valid, and *the only ultimate issue* for review by this Court is validity of the patent.

In this statement of the case we propose to lay a proper predicate for review by presenting in order (1) the patent, (2) the immediate background of its origin, (3) the prior art, (4) the Patent Office history and (5) the litigation history.

## The Patent

United States Patent No. 2,627,798 (hereinafter called 798), entitled "Clamp for Vibrating Shank Plows," was issued to William T. Graham on February 10, 1953, upon an application filed August 27, 1951 (R. 577). It relates to a spring clamp for pivotally attaching the shank of a ground working tool to the frame of a plow, the essential purpose of which is to permit the tool to pivot under spring pressure when rocks or other obstructions are encountered in the soil and return to operating position when the obstruction is cleared.

Colored enlargements of the patent drawings, Defendants' Exhibits 21-A-D,[1] have been furnished to simplify study of the structure and we invite the Court's use thereof in connection with the following discussion.

The clamp includes a main body portion or fixed member (yellow), adapted for attachment to a transverse plow beam (violet). The fixed member has a flat underface extending longitudinally from front to rear, laterally spaced side members forming a channel or way to receive a pivoted member and shank, a forwardly extending portion which provides a spring seat and rearwardly extending ears for mounting a pivot pin. A transverse pivot pin (blue) extends through the ears and a shank attaching member (dark green) is pivoted thereon. The shank attaching member has an elongated plate portion with a flat upperface corresponding with the underface of the fixed member and a flat underface corresponding with the upperface of the shank of a ground working tool, and at the rear there is a depending stirrup or loop (light green). The upper forward portion of the shank (pink) extends through

1. To avoid needless repetition of record references for exhibits, we point out that all of the exhibits were offered and received in evidence at R. 235-239, 517-521 and 574-575.

the stirrup and forwardly underneath the plate and is fastened thereto at the forward end by a bolt and nut (light green), whereby the shank attaching member and the shank pivot together about the axis of the pivot pin. A coil spring (orange) is seated on the forward portion of the fixed member and through a washer, nut and rod (brown), acts on the shank and plate to resiliently urge the forward ends thereof upwardly toward the fixed member, with the upperface of the plate member in stop engagement with the underface of the fixed member to position the shank for normal operation.

In plowing operations forces are exerted upon the ground working tool which tend to force the tool rearwardly and upwardly and when those forces are sufficient to overcome the force of the spring, the shank and plate member pivot on the pivot pin with the forward end of the shank and plate moving downwardly against the tension of the spring. When the ground forces are reduced the spring tension returns the tool to normal position. The stirrup at the rear of the plate cooperates with the forward bolt and nut to maintain connection of the shank and pivoted member during all phases of operation.

There is no substantial dispute as to the foregoing structure and operation, but there is sharp dispute as to one other feature—the feature upon which Graham now relies to sustain the patent.

Graham contends that the arrangement of the shank below the plate of the shank attaching member permits the forward portion of the shank to flex or bend *away from the plate* when heavy forces are exerted on the ground working tool, whereas in the prior art structures the arrangement of the shank relative to the plate of the pivoted member is such that the portion of the shank alongside the plate will flex or bend *toward the plate*. This difference, he says, produces

a significantly different and superior flexing of the shank. The difference in arrangement is apparent and we also recognize the *theoretical* difference in the direction of shank flex relative to the plate member, but we deny that those minute differences are of any consequence to performance of patentability. Furthermore, the asserted shank flex is not taught by the patent and is contrary to the claims.

With the 798 structure and operation in mind, let us consider its origin.

**Background and Development of 798**

The so-called "chisel plows" date at least from the 1930's. For example, see the Noell patent at R. 781. The typical chisel plow consists of a mobile frame with multiple transverse beams to which multiple spring steel shanks are attached by clamps. The term "chisel plow" results from the chisel type ground working tools which are frequently used, but a variety of other ground working tools are also used, depending upon the particular ground work to be done (R. 155-158).

In areas where the soil is free of rocks or other obstructions the shanks are normally attached to the plow beams by rigid clamps and the tools operate with a vibratory action which results from the inherent resiliency of the spring steel shanks (R. 152-155). When such plows were introduced into the glacial rock country of the North and Northwest in the mid to late 1940's considerable breakage and bending of parts resulted from the rocky conditions. To meet that problem Graham devised a spring clamp, Defendants' Exhibit 6, and obtained a patent thereon, United States Patent No. 2,493,811 (hereinafter called 811), issued January 10, 1950 (R. 717). Clamp 811 met the rock problem satisfactorily and Graham and his companies have manufactured and sold that clamp, with some modifications, from

about 1947 down to the present time (R. 241-242 and Finding V).

Colored enlargements of the 811 patent drawings are in evidence as Def. Exs. 14-A, B and C and there is obvous similarity to 798 in many respects. The main clamp body or fixed member (yellow), which is fastened to the transverse beam (violet), has a longitudinally extending underface, laterally spaced side members forming a channel or way to receive a shank and pivoted member, and ears at the rear, through which extends a transverse pivot pin (blue). Mounted upon the pin is an elongated pivoted member (dark green), called a "fulcrum plate" in the patent. At the rear of the plate member there is a downwardly facing recess which rides upon the pivot pin and at the forward end there is a similar downwardly facing recess which rides upon a T-shaped head of a spring rod (brown). The upper forward portion of the shank (pink) of a ground working tool is positioned between the underface of the fixed member and the upperface of the pivoted member. A coil spring (orange) is seated upon a forward portion of the fixed member and its pressure is transmitted through a washer, nut and rod (brown) to the pivoted member and shank to resiliently urge them upwardly toward the fixed member. In addition to transmitting the spring pressure, the spring rod passes through registering openings of the fixed member, shank and pivoted member and resists the rearward thrust or pulling load of the shank in plowing operations. Stop engagement of the upperface of the shank with the underface of the fixed member positions the shank for normal operation and when rocks or other obstructions are encountered the shank is permitted to pivot and return to normal position under the influence of the spring.

The specific structure of the 811 clamp produces some operating peculiarities. During the pivoting action the

fulcrum plate pivots about the pivot pin upon which it is mounted but the shank pivots about the upper rear surface or heel of the fixed member. Thus, with different pivotal axes for the fulcrum plate and shank, and with the spring rod carrying both the vertical thrust of the coil spring and the rearward thrust of the shank, there is a longitudinal sliding movement of the shank relative to the fulcrum plate and the fixed member. Those structural and operational characteristics result in wear on the rear of the fixed member where the shank pivots and rubs, wear on the forward portion of the fixed member and spring rod where the rod scrubs against the fixed member, and some binding of the spring rod which impedes the free action of the coil spring. In addition, it has been observed that there is noticeable looseness of the shank within the mounting and quite a large range of lateral movement or fishtailing of the shank in operation (Fenton, Graham's expert, R. 163-170, 172-175. Graham, R. 242-243. Fishleigh, Deere's expert, R. 272-279).

It is clear from the 798 File Wrapper (R. 678, *et seq.*) and Mr. Graham's testimony (R. 245-251) that 798 was devised to improve 811, and to accomplish the improvement essentially two things were done: (1) the shank was fastened to the pivoted member by a stirrup at the rear and a bolt at the front, and (2) the pivoted member and pivot pin were moved above the shank (R. 247, 254).

There is no testimony in the record of any long struggle, search or experimentation to effect those changes. On the contrary, the devising steps were preliminary pencil sketches by Graham (R. 255-256), then some drawings by his employee, Rose Proctor, at his instruction about March, 1950, and May, 1951 (Stipulation, Paragraph 6, R. 15), and a patent application filed on August 27, 1951. The 798 clamp has never been manufactured or sold by William T.

Graham, the Graham companies, or any licensee under them (Finding V), and there was never even a field test until 1962, and then only a modified version (R. 251-253). Graham's avowed purpose to improve and make a better clamp was accomplished on paper only and he has never put it to use.

Having considered what was done, next consider the disclosures of the prior spring clamp art.

**The Prior Art**

Five prior patents were made of record in the Patent Office during Graham's prosecution of the 798 application. They appear at R. 705-742 and are:

UNITED STATES PATENTS

| Patentee | Patent Number | Date of Issue |
|---|---|---|
| Drader, et al | 417,775 | Dec. 24, 1889 |
| Pfeifer | 2,014,451 | Sept. 17, 1935 |
| Graham | 2,493,811 | Jan. 10, 1950 |

FOREIGN PATENTS

| | | |
|---|---|---|
| | | Denmark |
| Petersen | 57,391 | Mar. 18, 1940 |
| | | Australia |
| Traeger | 111,910 | Nov. 21, 1940 |

Deere cited in its answer (R. 5) ten additional prior patents which appear at R. 743-794:

UNITED STATES PATENTS

| | | |
|---|---|---|
| Dunbar | 211,003 | Dec. 17, 1878 |
| Carter | 231,268 | Aug. 17, 1880 |
| Cobb | 284,278 | Sept. 4, 1883 |
| Rix | 287,965 | Nov. 6, 1883 |

UNITED STATES PATENTS

| | | | | |
|---|---|---|---|---|
| Moore | 503,288 | Aug. | 15, | 1893 |
| Lamprell, et al | 1,141,804 | June | 1, | 1915 |
| Roberts | 1,805,599 | May | 19, | 1931 |
| Erdman | 1,982,862 | Dec. | 4, | 1934 |
| Noell | 2,029,249 | Jan. | 28, | 1936 |

FOREIGN PATENTS

| | | | | |
|---|---|---|---|---|
| | | Australia | | |
| Prior | 1056/26 | Mar. | 29, | 1927 |

and two prior use devices: the Jeoffroy SC-580 Spring Clamp, Def. Ex. 2, and the Glencoe Spring Clamp, Def. Ex. 3. Colored drawings of those clamps are in evidence as Def. Exs. 18 and 17, respectively, and the priority of both clamps is established by stipulation (R. 16, Paragraphs 9 and 10).

The art of spring clamps is old and well developed and a brief study of the representative group shown on the colored chart, Def. Ex. 11, will reveal its scope and simplicity. Included on the chart are three of the patents cited by the Patent Office (Graham 811, Petersen and Traeger) and three patents and two devices not cited by the Patent Office (Dunbar, Cobb, Rix, Jeoffroy SC-580 and Glencoe).

Mr. Fishleigh, an eminently qualified expert (R. 257-261), pointed out (R. 262-3) that the art exhibits at least seven mechanical elements, to wit:

1. A transverse frame member, colored violet;

2. A fixed clamp member, colored yellow;

3. A pivoted shank-attaching member, colored dark green;

4. A pivot pin, colored blue, for pivotally connecting the shank-attaching member to the fixed member;
5. A shank for a ground working tool, colored pink;
6. Means, colored light green, for connecting the shank to the pivoted shank attaching member; and
7. Spring means, colored brown and/or orange, for resiliently holding the ground working tool in operating position;

and it is apparent that those seven elements are disclosed in a variety of forms and arrangements.

**Dunbar, Cobb and Rix**

These three old patents (R. 745, 755 and 759) relate to spring clamps for harrows and it will be sufficient to discuss only one of them.

The Rix patent of 1883 shows all seven of the mechanical elements. To the beam (violet) is attached a bolt or fixed member (yellow), having an eye on one end to receive a pivot pin (blue). A shank-attaching member (dark green) is pivoted on the pivot pin and the shank (pink) of the ground working tool is connected to the pivoted member by a loop or stirrup (light green) at the lower end and a bolt and nut (light green) above. The spring means is a coil spring (orange) and a rod (brown) connected at one end to a support on the beam and at the other end to the pivoted member. The stop to position the ground working tool for normal operation is provided by contact of the upper end of the pivoted member with the nut on the spring rod, and in operation the shank is permitted to pivot and return to normal position under the influence of the spring (R. 269-272).

**Petersen**

The Denmark patent of 1940 to Petersen (R. 727) involves a light cultivating tool, called a horse hoe in the patent, in which the shank of the ground working tool is substantially vertical as in Dunbar, Cobb and Rix. There is a transverse beam (violet) to which a fixed clamp member (yellow) is attached by bolts. The fixed member has laterally spaced sides forming a channel, with a pivot pin (blue) passing therethrough. Pivoted on the pin is a shank-attaching member (dark green) to which the shank (pink) of the ground working tool is attached by means of a loop and a setscrew (light green). A coil spring (orange) with an adjusting bolt (brown) is seated at one end against the fixed member and at the other end against the pivoted member. The stop for positioning the shank for normal operation is provided by a beak 17 on the pivoted member which contacts a shoulder 18 on the fixed member and in operation the shank is permitted to pivot and return to normal operating position under the influence of the spring (R. 285-9).

**Traeger**

The Australian patent of 1941 to Traeger (R. 735) is entitled "An Improved Spring Tyne for Agricultural Implements," but it reveals a spring clamping means which permits the rear portion of the spring tyne to pivot and return to normal operating position under the influence of coil springs. The drawings do not show the transverse beam or the means for attaching the tyne to the beam, but it appears from the specifications that the upper portion of the two-part L-shaped spring tyne would be secured to the frame of the implement by bolts or other fastening means; thus the upper portion of the tyne which is fixedly attached to the beam may be considered as the fixed part

of the mounting, and it is therefore colored (yellow). At its rear there is an eye to accommodate a pivot pin (blue). Mounted on the pivot pin is a shank attaching member (dark green) to which the shank (pink) of the ground working tyne is affixed by means of a rivet (light green). The forwardly extending portion of the lower tyne terminates at its forward end in a loop which connects with the spring means. The spring means comprises two coil springs (orange) which are seated upon a helper on the fixed element and two rods, washers and nuts (brown). The stop to position the tyne for normal operation is provided by direct contact of the forward end of the pivoted portion of the tyne with the rearward portion of the fixed element and in operation the ground working tool pivots to clear obstructions and returns to normal operating position under the spring pressure (R. 279-283).

**Graham 811**

The Graham 811 patent has been fully discussed, *supra*, pp. 9-11, and we emphasize only one additional point here. It contains the same basic mechanical elements as the other prior art devices *except* that there is no true or separate means for fastening the shank to the pivoted member (R. 277-278).

**Jeoffroy SC-580**

The Jeoffroy SC-580 Spring Clamp was held to infringe the 811 patent in *Jeoffroy Mfg.* v. *Graham*, 206 F.2d 772 (5th Cir. 1953), and of course it is quite similar to 811, but it has some structural differences which should be noted. The pivoted member (dark green) has a true pivotal connection at the rear rather than a recessed bearing, as in 811. The spring rods (brown) do not pass through the shank (pink) and do not carry the rearward thrust

or pulling load of the shank. There is an interlocking nib and socket arrangement which is normally sufficient, under the pressure of the two coil springs (orange), to maintain the shank and pivoted member in their operating association and prevent the shank from being pulled out of the mounting, but, as in 811, there is not a true fastening means for attaching the shank to the pivoted member. The stop for normal positioning of the shank is direct contact of the upperface of the shank with the underface of the fixed member and the general operation is quite similar to 811. All of the seven mechanical elements of the other prior art structures are present *except* the fastening means (R. 296-302).

**Glencoe**

The transverse frame member (violet) of Glencoe is a common angle iron and its fixed clamp member (yellow) naturally is shaped to conform with that particular beam and is attached thereto by bolts. Laterally spaced sides of the fixed member form a channel or way to receive a pivoted member and shank and a pivot pin (blue) extends therethrough. Pivoted on the pin is a shank-attaching member (dark green) of elongated plate formation with a loop (light green) at its rear. The upper forward portion of the shank (pink) of a ground working tool extends through the loop and forwardly along the upperface of the pivoted member and is attached thereto at the front by a nut and bolt (light green). Two concentric coil springs (orange) are seated on a forward extension of the fixed member and through a washer, nut and rod (brown) act upon the pivoted member and shank to urge them upwardly to stop engagement with the fixed member. The stop to position the shank for normal plowing operation is a downwardly extending lug of the fixed member which contacts a corresponding upwardly extending lug of the pivoted

member. When rocks or other obstructions are encountered in the soil the shank and pivoted member are permitted to pivot about the axis of the pivot pin and return to normal position under the influence of the spring (R. 289-295). It is obvious that all of the mechanical elements previously noted in the other art and *all of the mechanical elements of 798 are present in Glencoe.*

**The Prior Art As a Whole**

We believe it is accurate to say that the foregoing prior art reflects the common use of spring clamps for over seventy years in farm implements, ranging from wooden frame harrows to the more recent chisel plows, that those clamps have contained in varying forms and arrangements the seven mechanical elements heretofore set out and that they all have a basically similar purpose and mode of operation, *i.e.,* to resiliently and pivotally mount a ground working tool upon a frame so that the tool may pivot in response to rocks and other obstructions in the soil and return to normal operating position under spring pressure.

With the art in mind, let us consider the 798 application and its progress through the Patent Office (File Wrapper and Contents, R. 659-704).

**Patent Office History of 798**

The Patent Office history of 798 is particularly important because of the extreme divergence between the distinctions and contentions made there and those subsequently made in the courthouse.

The application contained twelve initial claims (R. 667-675), all of which were rejected in the first Office Action (R. 685-686).

Claims 1 through 9 were rejected on Graham 811 as failing to patentably distinguish therefrom, the Examiner stating:

> "The expedient reversal of the relative positions of the elements 34 (the shank) and 63 (the pivoted member) of Graham (811) and the mere provision of a fastening means between the forward ends of said elements are considered matters of design well within the expected skill of the art and devoid of invention. Clearly no new or unexpected result is obtained by these expedient modifications within the scope of the combination."

Claims 1 through 9 were further rejected on Graham 811 in view of Petersen and Drader (R. 707), Petersen as suggesting the disposition of the Graham pivoted member above the shank, and Drader as suggesting the use of fastening means in the forward ends of the shank and pivoted member.

Claims 10, 11 and 12 were rejected for the same reasons, in view of Pfeifer (R. 711). Pfeifer was cited for an element that is not in the allowed claims and it is not material to this case.

In response (R. 687-693), Graham cancelled the twelve original claims, substituted Claims 13 and 14, and argued the following achievements and distinctions:

1. The 798 structure is an *improvement over 811* because it substantially *reduces wear* and *reduces the time and expense of repair*. He advised the Examiner that in 811 there is wear on the fixed member where the shank rubs in pivoting and that such wear is eliminated in 798 by placing the pivoted member between the shank and the fixed member and by locating the pivot pin so that there is no rubbing contact with the fixed member. With that arrangement the vibratory movement of the shank is on the

pivoted member, a less expensive part which is easier to replace.

2. Petersen, a foreign reference, and the modification of 811 suggested thereby, *i.e.*, mounting the pivoted member between the shank and fixed member, were distinguished because:

(a) In Petersen the groundworking *teeth are mounted vertically and the contacting faces of the mounting parts are thus vertically transverse* to the movement of the implement.

(b) The stop which positions the tool in Peterson is a beak 17 on the pivoted part which engages a shoulder 18 of the fixed part *with resulting rubbing wear on the fixed part.*

(c) The contacting faces of 798 *extend substantially the full length of the mounting and no one portion of one face contacts another face before other portions come into contact;* consequently, the 798 stop faces are not equivalent to the beak and shoulder of Petersen.

(d) Petersen has only *a single means for fastening the shank to the pivoted member and that means is at the pivotal end.* There is no means for connecting the shank to the pivoted member at both ends, as in 798.

3. Traeger, a foreign reference, was distinguished on the ground that the shank 2 would have *rubbing contact* with the eye 4 on the fixed part of the clamp and because there was *no suggestion in Traeger for mounting the plate of the pivoted member between the shank and the fixed part.*

4. Drader, cited by the Examiner as showing fastening means which could be used to connect the shank and pivoted member at the forward end, was avoided on the

ground that the Examiner had improperly applied it because neither of the principal references (Graham 811 and Petersen) *suggest a connection of the forward end of the shank with the forward end of the pivoted plate,* particularly when such connection is used with an *embracing means at the opposite end* of the engaging face portions of the respective mounting members.

In pointing out the specific distinctions in the two new claims he noted particularly (1) the longitudinally extending underface of the fixed member, (2) the corresponding and contacting upperface of the pivoted member, (3) the means connecting the shank and pivoted member to maintain the upperface of the shank in constant continuous contact with the underface of the pivoted member, and (4) the position of the pivot pin. (It should be noted here, because it will become very material later, that *Graham did not mention or suggest any difference in shank flex.*)

The response satisfied the Examiners; no further art was cited; the two claims were allowed, and we invite the Court's attention to the specific details of the claims and their application to the structure as set out on the colored claim charts, Def. Exs. 22 and 23.

Finally, to complete the predicate for review, let us see what has happened to the patent in the courthouse.

## Litigation History

### Graham v. Jeoffroy

About one year before 798 was issued Jeoffroy placed its HT-5 Spring Clamp, Pl. Ex. C, on the market and filed suit in the United States District Court at Amarillo for declaratory judgment that HT-5 did not infringe the 811 patent. Graham counter-claimed, charging infringement of 811, and the case was pending when 798 issued. Graham

immediately amended to charge infringement of 798. Jeoffroy challenged validity and the trial court, in an unpublished opinion, held 798 *invalid* in the following language (R. 914-915):

"PATENT No. 2,627,798

"The recent Graham structure covered in the above numbered patent, issued in 1953, is a plain counterpart of the accused structure made by Jeoffroy. The same reasons for finding infringement (of 811) against Jeoffroy, also disclose invalidity of this latest Graham patent. It is a case of double patenting between the two Graham patents, and so under the ban of a well settled rule of patent law. If the said patent were not invalid as a double patent, *in any event it would be for lack of invention.* This patent 798 does mark *an improvement bettering efficiency and economy over patent 811, but that is not enough to constitute invention.* The said patent 811 was the springboard and from that vantage background the next step from that structure to the structure of patent 798, *was well within the capacity of a skilled mechanic.*" (Emphasis added).

The Court of Appeals for the Fifth Circuit reversed, *Jeoffroy Mfg.* v. *Graham*, 219 F.2d 511 (5th Cir. 1955), holding the patent valid on the following grounds, pp. 518-519:

"Our interpretation of the prior art, the physical exhibits, and the testimony, however, compels us to *disagree* with the learned district court's conclusion that the 798 patent is invalid, either for 'double patenting' or lack of invention. Though we do agree that 798, as an improvement combination, is not entitled to any broad degree of protection over 811, it still seems to us that *its hybrid type structure combining the wear-resisting rotating pivot, in part reminiscent of the prior art, with the new shank and stirrup arrangement permitting some of the same advantageous flexibility inherent in the old 811 structure, reveals sufficient indicia of novelty and invention to justify limited protection.*

> * * * Other factors strongly influencing and, we think, reinforcing our conclusion as to the validity of 798 are: * * * (3) *the further rule, long recognized by this Court, that an improvement combination is patentable even though its constituent elements are singly revealed by the prior art, where, as here, it produces an old result in a cheaper and otherwise more advantageous way;* * * * *We conclude, therefore, that Graham's 798 patent* is not invalid, either for 'double patenting' or lack of invention, but *exhibits patentable novelty and invention not effectively anticipated by any of the prior art patents or alleged public uses relied upon.*" (Emphasis added).

Jeoffroy sought certiorari and the petition was denied, 350 U.S. 826, presumably because there was then no conflict with any other circuit on this patent.

**Graham v. Cockshutt**

The next chapter was *Graham* v. *Cockshutt Farm Equipment*, 256 F.2d 358 (5th Cir. 1958). Cockshutt challenged validity, citing the same prior art as in the *Jeoffroy* case, plus Rix, Roberts and Glencoe, and denied infringement. The trial Judge, constrained by his reversal on validity in *Jeoffroy*, held the patent valid but not infringed, his unpublished letter opinion making no analysis of the additional art. The Fifth Circuit affirmed and the portion of the opinion relating to validity, 256 F.2d at 359, is as follows:

> "* * * We conclude * * * after careful consideration, that our decision previously made as to the validity of this patent should stand. * * *
>
> "As pointed out above, no part of this device is itself patented or subject to patent, since every one of the parts is old, and its use independently in the present combination is a long known use. *It is only because this particular arrangement of these known*

*elements adopted by Graham achieves the result better than the prior art afforded that Graham was entitled to a patent.*" (Emphasis added.)

**Graham v. Deere**

Then Graham sued Deere in the Western District of Missouri and the trial court sustained 798 with the following findings:

"XI. Defendants place principal reliance upon the prior art patents to Cobb 284, 278 and Rix 287,965 and the prior device of Glencoe, and contend that the usual presumption of validity does not apply because the Patent Office failed to consider these patents and device, as well as the other additionally cited prior art. All of the prior art cited by defendants was before the Court in the Fifth Circuit in Graham v. Cockshutt, wherein the decision, 256 F.2d 358, held the Graham patent valid, but not infringed. The disclosures of the prior art not cited by the Patent Office, and particularly the Cobb and Rix patents and the Glencoe device, are similar to some of the patents relied upon by the Patent Office Examiner, as for example, the Danish patent of Petersen. Hence, the statutory presumption of validity of the Graham patent in suit is not weakened or destroyed.

"XII. The prior art as a whole in one form or another contains all of the mechanical elements of the Graham 798 structure, and in a broad sense all of the elements are found in one single reference, the Glencoe clamp. However, the particular arrangement of the elements disclosed by 798 is not present in any single reference or as a whole.

"XIII. An improved functional result is obtained by the Graham 798 structure and the main improvement is due to the particular arrangement of the shank in relation to the pivoted member and spring member which reflects in downward flexing of the shank

at the forward portion thereof alongside the plate portion of the pivoted member and does lessen wear and tear to some parts of the clamp.

"XIV. The Glencoe structure uses a rotating pivot which prevents rubbing contact of the shank with the fixed member of the clamp and means for attaching the shank to the privoted member which permits flexibility of the shank posteriorly to the rear of the pivoted member equal in magnitude to that which would be expected in the Graham 798 patent structure. However, the flexing of the shank is different in direction and location relative to the pivoted member than that which occurs in the Graham 798 structure. The Graham 798 patent is an improvement patent and, while the individual mechanical elements may be found in the prior art, taken as a whole the Graham 798 structure is sufficiently different in the operative relationship of the shank and pivoted member with a slight but significant difference in the flexing of the forward portion of the shank that is not found in the prior art, so that the Graham 798 patent involves invention.

"XV. The differences between the Graham 798 patent and the prior art are such that the Graham 798 structure, as covered by claims 1 and 2 thereof, would not have been obvious at the time Graham made his invention to a person having ordinary skill in the art of agricultural implements and other related arts. It would not have been obvious to a man having ordinary skill in the art to have taken certain components of the prior art and to have combined them in the manner disclosed and claimed in the Graham patent. Even with the full benefit of hindsight, it cannot be said that the Graham structure represents no more than skilled craftsmanship.

"XVII. It demanded invention of the quality required by the Patent Statutes, Title 35 U.S.C., to produce the structure of the Graham 798 patent. De-

fendants have failed to sustain the burden imposed by § 282, Title 35 U.S.C."

In the course of its opinion, the trial court noted that the patent had been held valid by the Fifth Circuit in the *Jeoffroy* and *Cockshutt* cases, but did not cite or analyze any other authorities.

The Court of Appeals for the Eighth Circuit reversed with three principal rulings: *first*, that the trial court failed to apply a proper standard of invention; *second*, that the trial court's finding that 798 exhibits invention and would not have been obvious to a person having ordinary skill in the art was without adequate evidentiary support and was clearly erroneous; and, *third*, that 798 exhibits mechanical skill only and would have been obvious to a person having ordinary skill in the art. As an incidental matter, the court also ruled that the presumption of validity is weakened when applicable prior art is not considered by the Patent Office.

In the following argument we propose to show that the decision of the Eighth Circuit is correct and the decisions of the Fifth Circuit were wrong.

## SUMMARY OF THE ARGUMENT

The 798 spring clamp is one of several in a well developed art. It contains no new element and merely reflects a somewhat different arrangement of the old elements. The changes over the prior art were plainly indicated and would have been obvious to one having ordinary skill in the art. No new or unexpected result was obtained and there was no substantial or unexpected change in the functions of the individual elements. The alleged accomplishments of some reduction in wear to some parts

of the clamp and a slight difference in the flex of the shank were obvious consequences of the rearrangement. Furthermore, the alleged difference in shank flex is unimportant and it was not disclosed or claimed. The subject matter as a whole would have been obvious to a person having ordinary skill in the art. The patent is invalid and the Court of Appeals for the Eighth Circuit correctly so ruled.

Section 103 of the Patent Act of 1962 merely paraphrased and adopted as a condition of patentability the standards of invention established by this Court. It made no material change in the law and the tests previously announced by this Court are proper tests under the statute. In any event, however, if Section 103 did make any change it is immaterial in this case because the Court of Appeals for the Eighth Circuit carefully applied both the cases and the statute and found the 798 patent lacking.

The judgment of invalidity should be affirmed.

## THE ARGUMENT

### Introduction

This is the first case in which the Court has granted certiorari on the question of patent validity since passage of the Patent Act of 1952, and it has excited considerable interest as evidenced by the briefs of amicus curiae.

The amicus curiae present somewhat different arguments and conclusions as to the effect of the Act on patentability, but in general they (and Graham) argue that Section 103 of the Act established a statutory test or standard of "invention" or "patentability" which changed existing law (at least to some extent) and that Section 103 is now the only test which may be used.

No doubt a decision as to the status of the law is important and we will deal with that matter in due course, but we think it is appropriate first to dispose of the patent in suit because it does not meet any legitimate test, regardless of whether the test is phrased in the language of Section 103 or in the language of the decisions of this Court.

## POINT I.

### The Court of Appeals for the Eighth Circuit Correctly Held Patent No. 2,627,798 invalid.

#### A Combination of Old Mechanical Elements

The prior art plainly shows that spring clamps for ground working tools are *not new*. It further shows that spring clamps for "chisel plows" are *not new* and that 798 is merely one such clamp in a well developed art. Graham does not challenge the trial court's finding (Finding XII) that all of the mechanical elements of 798 are present in the prior art in a variety of forms and that all of the elements in a broad sense are present in the Glencoe clamp. It is clear, therefore, that we are dealing with a patent which exhibits *no new element*, and its validity must stand or fall on the *combination* of elements and the achievements thereof.

If the *particular arrangement* of the elements as disclosed in 798 had been shown in the prior art, the patent would of course be invalid by reason of anticipation (or lack of novelty) as set out in Section 102 of the statute and there would be no need to proceed further. We frankly concede, however, as the trial court found (Finding XII), that the *particular arrangement* of the elements disclosed by 798 is not shown in the art and we turn our attention to the controlling question whether 798 discloses "non-obvious subject matter" or "invention."

What was Graham's problem and purpose in designing 798? Several years' experience with his 811 spring clamp had shown some undesirable wear factors and his avowed purpose was to eliminate some of that wear and improve the clamp.

What did he do? He made some drawings modifying his 811 clamp (1) by fastening the shank to the pivoted member by means of a stirrup at the rear and a bolt at the front, and (2) by moving the pivoted member and pivot pin to a position above the shank.

To what extent were those changes or modifications plainly indicated by the art and to what extent were they within the expected capacity of one skilled in the art?

**Obvious Modifications**

The changes in the form of the pivoted member and the shank fastening means are almost too simple to justify discussion. The Patent Office Examiner relied upon Petersen as teaching the shank embracing stirrup and Drader as suggesting the fastening means and Graham distinguished in part on the ground that those references did not show a *stirrup at the rear* and a *bolt at the front.* Much better references would have been Rix and Glencoe, both of which show a shank fastened to a pivoted member by *a stirrup at one end* and *a bolt at the other.* It would be difficult to imagine a more precise teaching of the 798 pivoted member and shank fastening means and the conclusion is inescapable that it required only mechanical skill (and very little of that) to adapt them for use in the Graham clamp.

The relocation of the shank attaching member and pivot pin *above the shank*[2] is not quite so precisely taught

2. A pivot pin and pivoted member *above the shank* are shown in Drader (R. 707) and Erdman (R. 777) but it might not be proper to call the pivoted member a plate.

in the art but it is nonetheless the product of mechanical skill only. The only problem was to select a position and arrangement of the pivot pin and pivoted member which would avoid rubbing contact and wear upon the fixed member. Pivot pins and shank attaching members are shown in almost every conceivable position in the art and surely any skilled engineer, pattern man, mechanic or even blacksmith could arrange those parts so as to avoid rubbing contact with the fixed member. It would seem equally elementary that any skilled mechanic could invert the positions of the shank and pivoted member without resort to any prior patents or devices, and if emphasis is placed upon the position of the pivoted member *between* the shank and fixed member, rather than *above* the shank, that relationship is shown in the Rix and Petersen patents.

Skill in the art is not confined to the specific disclosures of prior patents and devices; it also includes the basic capacities which ordinary craftsmen are bound to have in working with the materials and tools of their trade, and surely it is not necessary that they have a picture to guide them in every modification that is made. Surely they must have the capacity to change forms and shift positions to accomplish desired modifications of existing devices. *That is all that was involved here.*

Mr. Fishleigh prepared two colored charts, Def. Exs. 24 and 25, demonstrating how a skilled mechanic might make obvious use of the prior art disclosures and teachings to devise a structure substantially the same as 798 (R. 319-337), and as he stated on cross-examination (R. 437), "a glance at this prior art shows that all of the features of 798 are present and taught in the prior art and all that it amounts to is a little shifting around of some of those features."

Another utterly simple way of arriving at the same end may be demonstrated by a minor modification of the Glencoe clamp without reference to any other art. Two changes are involved: *first*, the pivoted member and shank are inverted, and *second*, the stop lug on the pivoted member, which contacts the fixed member to position the shank for normal operation, is shifted from one side to the other. These simple changes are shown on the colored drawing, Def. Ex. 17-A, and the additional stop lug, Def. Ex. 3-A, has been actually added to the Glencoe clamp, Def. Ex. 3. Such an inversion of the pivoted member was suggested by the Patent Examiner in the Rolf (Glencoe) File Wrapper, Pl. Ex. O (R. 612), as a mere mechanical expedient not amounting to invention[3], and certainly the shifting of the stop lug from one side to the other would be of the same dignity. Is it conceivable that any skilled mechanic could not have made those changes in the ordinary course of manufacture?

We respectfully submit that the modifications of the prior art to produce 798 represent mechanical skill only and the Eighth Circuit so found in the following language (333 F.2d at 534):

> "* * * Painstaking examination of the entire record, including the testimony of the experts, convinces us that the changes in the prior art embodied in the 798 Patent involve only application of mechanical ability, and that there is no adequate evidentiary support for the trial court's finding of invention."

---

3. In fact the Examiner regarded 798 as the full equivalent of Rolf (Glencoe) and 798 was overcome as a reference only because Glencoe was reduced to practice before 798's filing date (R. 613-623). Conversely, therefore, Glencoe was the full equivalent of 798 and if Glencoe had come to the Examiner's attention while 798 was pending 798 no doubt would have been rejected on Glencoe.

There is no room for reasonable doubt on that finding and we turn to the question of achievement.

**Obvious Consequences**

Graham does not contend that 798 would produce any difference in the *pivotal movement of the shank* or any difference in the *ground working performance of the tool* and his expert, Mr. Fenton, testified that there would be no material difference in those respects (R. 170-172). Graham does contend that the particular arrangement of 798 accomplished some *reduction in wear* and *improved flexing of the shank.* The trial court so found and upon that basis concluded that 798 would not have been obvious and was inventive (Findings XIII and XIV).

We respectfully submit that those findings are clearly erroneous and the Eighth Circuit so held

**Wear Reduction**

It may be conceded that 798 would eliminate two principal wear factors in the 811 clamp. (1) Fastening the shank to the pivoted member and arranging the pivot pin so that both the shank and pivoted member would pivot about the pivot pin would eliminate the rubbing wear of the shank upon the rear of the fixed member. (2) Fastening the shank to the pivoted member also would remove the pulling load from the spring rod and thereby eliminate rubbing wear on the front of the fixed member. Thus, it may be conceded that there was some improvement in wear characteristics *as compared to 811.* But the other art must be reckoned with and it will be immediately apparent that *all of those wear reductions had been fully accomplished in Glencoe.* The trial court specifically found (Finding XIV) that Glencoe uses a rotating pivot which prevents rubbing contact of the shank with

the fixed member and it is further obvious that the Glencoe fastening of the shank to the pivoted member eliminated any pulling load on the spring rod and any rubbing wear of the spring rod upon the fixed member.

In the Patent Office, Graham pointed out that 798 was further an improvement over 811 in that any vibratory action of the shank would be upon the pivoted member rather than the fixed member and that if the pivoted member should become worn it would be easier and cheaper to replace. *Precisely the same accomplishment was achieved in Glencoe.*

We submit, therefore, that while 798 may have represented an improvement in wear reduction as compared to 811, it represented no improvement in that respect over Glencoe. Furthermore, even if 798 did mark an improvement in efficiency or economy over the art, those achievements would have been as plain as the nose on your face to any skilled mechanic or even to a farmer, and surely in this modern day a mere reduction of wear, an improvement in efficiency or economy, is the product of mechanical skill only and is not sufficient to sustain a patent. This Court expressly so ruled in *Altoona Publix Theatres, Inc.* v. *American Tri-Ergon Corp.*, 294 U.S. 477, 486, 79 L. Ed. 1005, 55 S. Ct. 455 (1935), as follows:

> "The bringing together of old elements in a mechanism involving no new principle, to produce an old result, however skillfully done, even though the old result marks an advance in efficiency and utility, is but an exercise of mechanical skill and not invention."

*This patent simply cannot be sustained upon the ground that it reduced wear.*

**Shank Flex**

We come then to the one remaining feature which Graham urges, and the trial court found, as a significant achievement of 798, sufficient to sustain the patent, *i.e., improved shank flex,* and we propose to show that the patent cannot be sustained on this ground either.

At the outset, let us reduce that feature to its precise limitations. The trial court found (Finding XIV) that the Glencoe clamp "permits flexibility of the shank posteriorly to the rear of the pivoted member equal in magnitude to that which would be expected in the Graham 798 Patent structure" and it is obvious that the same thing would be true of Graham 811 and Jeoffroy SC-580. Therefore, we are concerned only with flex which might occur *in the forward end of the shank between the pivot point and the spring attachment.*

Graham's contention is that in 798 the arrangement of the shank below the plate of the pivoted member permits the forward portion of the shank to flex downwardly *away from the plate,* whereas in the prior art structures such as Rix, Cobb, Petersen, Graham 811, Jeoffroy SC-580 and Glencoe the relation of the shank to the pivoted member is such that the tendency of the shank to flex in the portion alongside the plate is *toward or against the plate* of the pivoted member and is opposed thereby. He asserts that this difference in 798 permits or produces a desirable flexing in the forward portion of the shank that is not taught by the prior art. The trial court accepted that contention and found (Findings XIII and XIV) that "an *improved functional result* is obtained by the Graham 798 structure", that "the *main improvement* is due to the particular arrangement of the shank in relation to the pivoted member and spring member which reflects in *downward flexing of the shank at the forward portion thereof alongside the plate*

*portion of the pivoted member*", and that "the Graham 798 structure is sufficiently different in operative relationship of the shank and pivoted member with a *slight but significant difference in the flexing of the forward portion of the shank* that is not found in the prior art, so that the Graham 798 Patent involves invention." Let us examine those findings.

*The theoretical difference in the direction of shank flex relative to the plate is obvious.* For simplicity of analysis, compare the Graham 811, Jeoffroy SC-580 and Glencoe prior art spring clamps with 798. In all four, there is a longitudinally extending shank and ground forces on the working tool produce an upward and rearward force which tends to rotate the shank about a pivot point. In all four, the pivot point (not necessarily the pivot pin) for the shank is *above* the shank. Therefore, as the rear portion of the shank moves *upwardly* the forward portion moves *downwardly*. The rotating force is opposed by the spring attachment at the front. Thus, because of the resistance of the spring and the fact that the shank is fastened at its forward end, there is *a tendency of the shank to bend, bow or flex downwardly in the portion between the pivot point and the point of forward attachment.* When the shank is *above* the plate, as in Graham 811, Jeoffroy SC-580 and Glencoe, it is obvious that the shank will *tend to bend downwardly TOWARD the plate* and when the shank is *below* the plate, as in 798, it is obvious that the shank will *tend to bend downwardly AWAY FROM the plate.* The experts agreed on these facts and conclusions (Fishleigh, R. 479-481, and Fenton, R. 539-544) and they are nothing but elementary physics. The theoretical difference in direction of shank flex relative to the plate member is clear and undisputed but it is and would have been obvious to anyone, whether skilled in the art or not.

*This obvious theoretical difference makes no material difference in the performance of the shank.*

No one has ever tested Graham's 798 for shank flex since he has never made the clamp, but Mr. Fenton tested a Jeoffroy HT-5 clamp with a three-quarter inch shank, like Pl. Ex. "C" which was held to infringe 798 in the *Jeoffroy* case. He was able to measure a downward deflection of .035 inch in the forward portion of the shank (R. 546-547) and we may assume that the 798 shank would have a similar *amount* of downward deflection. The record is clear, however, that some of the prior clamps would allow that *amount* of downward flex. Plow clamps are relatively rough castings and clearances are allowed for assembly and mounting. Examination reveals that the clearances are quite large and Mr. Fishleigh testified that there are sufficient clearances in Graham 811, Jeoffroy SC-580 and Glencoe to permit the forward portion of the shank to flex downwardly, even though the plate is underneath the shank, as much as would be expected of the 798 shank (R. 479-482). Mr. Fenton agreed as to Graham 811 and Jeoffroy SC-580 (R. 539-545). *Therefore, 798 did not change the AMOUNT of forward shank flex.*

Mr. Fenton stated that there might be some variation in the *distribution* of the flex between the fulcrum point and the point of spring attachment (R. 553-554), and he made sketches, Pl. Exs. R, S, T, U, V, and W (R. 643-653), to illustrate the possible variations that might result (R. 570-573). The net conclusion from those sketches and his testimony is that when the plate is above the shank the point of maximum flex in the forward end of the shank would be slightly farther forward from the pivot point than it would be when the plate is below. There is no proof in the record that such variations do actually occur but the theory seems sound and we therefore assume, for purposes

of argument, that the location of the plate *would make a slight difference in shank flex DISTRIBUTION.*

The proof therefore is that 798 would not change the amount of forward shank flex but it might make a slight difference in the distribution. *The record further shows conclusively, however, that whatever the direction, magnitude or distribution of flex in the forward portion of the shank may be, it is unimportant to the operation.*

Mr. Fishleigh testified that the long curved rearwardly extending portion of the shank is designed for large ranges of flexion and that in actual operation there is a great deal of flex in that part of the shank, but that in the forward portion of the shank, alongside the plate member, the range of flexion is extremely small, only a few thousandths of an inch at most, and that *such flexion is of no consequence to the operation* (R. 364, 479). The testimony of Mr. Fenton likewise minimizes the importance thereof (R. 548):

> "Q. Do you regard the small degree of flex in the forward end of the shank that lies between the pivot point and the point of spring attachment to be of any significance or any importance to the functioning of a device such as 798?
> "A. Unless you are approaching the elastic limit, I think this flexing will reduce the maximum stress at the point of pivot there, where the maximum stress does occur. I think it will reduce that. I don't know how much.
> "Q. Do you think it is a substantial factor, a factor of importance in the functioning of the structure?
> "A. Not a great factor, no."

Similar testimony was given by him in the *Jeoffroy* case and pointed out in this case (R. 548-549), as follows:

"Q. * * * Do you consider this portion, this what you call the resilient action of the shank, Mr. Fenton, in the forward 8 or 9 inches of that shank that's up inside the mounting or bracket, important to the function of the device?

"A. Not too important. It is present, but not too important.

"Q. It would function just as well whether that were there or not, wouldn't it?

"A. In this particular case in this device?

"Q. Yes, sir.

"A. I think it would essentially, yes."

There is not one line of evidence in this record that there was any problem of shank breakage or bending with the Graham 811, Jeoffroy SC-580 or Glencoe clamps, and there is no evidence that shank performance was improved in any way by the 798 clamp.[4]

We respectfully submit that the trial court's finding of an improved functional result obtained by a "*significant difference* in the flexing of the forward portion of the shank" is wholly unsupported by the record and is contrary to the testimony of both of the experts. *It is clearly erroneous and the Court of Appeals for the Eighth Circuit so ruled.*

**Undisclosed and Unclaimed Function**

Assuming, however, for purposes of argument that the slight difference in forward shank flex distribution and relative direction is significant and important to the operation and could be called a new or unobvious function or conse-

---

4. It is interesting to note that in the *Jeoffroy* case, 219 F.2d at 518, the Fifth Circuit said 798 was inventive because it permitted "some of that same advantageous flexibility inherent in the old 811 structure". Apparently the Fifth Circuit thought that 798 was less flexible than 811.

quence, we submit that *it cannot support the patent because it is foreign to its teachings and contrary to its claims.*[5]

There is not one word about it in the specifications; it is not mentioned in the twelve original claims; it is not mentioned in the two allowed claims; it is not mentioned in the Patent Office proceedings where great emphasis was placed on wear reduction and distinction of structural detail from the prior art; and it is not shown in the drawings. We direct the Court's attention particularly to Figure 6 of the drawings showing the device in a pivoted position where maximum shank flex would occur, but *the shank lies in a straight line along the full length of the plate member with no showing of any flex away from the plate member at any point.* (Compare the sketch, Pl. Ex. P (R. 647), made by Mr. Fenton during the trial, wherein he sought to show the theoretical flex by the dotted lines in the 798 shank.)

Not only did Graham fail to disclose, mention or claim the shank flex in the patent or the Patent Office proceedings, it is evident, as Mr. Fishleigh pointed out (R. 478-479), that *any flexing of the shank away from the plate of the pivoted member would be in direct conflict* with Claim 1 which specifies:

> "means connecting the elongated plate portion with the shank for maintaining the upperface of the shank in *constant continuous contact* with the underface of said plate portion of the shank attaching member" (Emphasis added.)

and with Claim 2 which specifies:

> "a bolt connecting the forward end of the plate portion with the forward end of the shank and cooperating with the shank embracing means in maintaining the upper-

---

5. At this point we respectfully direct the Court's attention again to the Patent Office history at pages 18-21, *supra.*

face of the shank in *constant continuous contact* with the underface of said plate portion." (Emphasis added.)

Graham, of course, now contends that the claims do not specify that the shank is in constant continuous contact with the plate *along its entire length* and that if it remains in contact at any point it satisfies the claims. In the Patent Office, however, one point Graham emphasized (R. 692) was that the two new claims distinguish from the cited art

> "by bringing out means connecting the elongated plate portion with the shank for maintaining the *upperface* of the shank in *constant continuous contact* with the *underface* of the plate portion of the fixed member." (Emphasis added.)

The drawings show continuous contact throughout the entire length during all phases of operation and we think that is the fair meaning of the claim language in view of all the attendant circumstances. In fact, if the shank were bolted to the plate at several places so as to eliminate any possible flex the claims would still apply because flex is not claimed.

Section 112 of the Patent Act (35 U.S.C., § 112) provides:

> "The specification shall conclude with one or more claims particularly pointing out and distinctly claiming the subject matter which the applicant regards as his invention.
>
> "An element in a claim for a combination may be expressed as a means or step for performing a specified function without the recital of structure, material, or acts in support thereof, and such claim shall be construed to cover the corresponding structure, material, or acts described in the specification and equivalents thereof."

If the shank flex function is really important, Graham was clearly authorized by the statute to claim the means for achieving that function, and if it is the real heart of the invention, as he now asserts, he was required to disclose and claim a structure which would perform the function—not one which is exactly the opposite. He claimed in detail the longitudinally extending faces and the relationship of the fixed member, pivoted member, shank and shank fastening means and he emphasized to the Examiners how wear was reduced and repair facilitated thereby, *but he did not at any time or in any way suggest the shank flex which he now asserts as the thread of life for this patent.*

We submit that Graham's whole shank-flex argument is an afterthought, wholly foreign and contrary to the patent teachings and claims, which should be rejected just as the Eighth Circuit did, and just as this Court rejected a similar argument in *Lincoln Engineering Co.* v. *Stewart-Warner Corp.*, 303 U.S. 545, 550, 83 L. Ed. 1008, 58 S. Ct. 662 (1937), in the following language:

> "* * * the respondent * * * urges that in the combination of the Butler patent, the headed nipple performs a new and different function from that which it had heretofore performed, in other combinations, in that, when the coupler is withdrawn from the nipple, at the end of the greasing operation, the rounded head of the nipple 'cocks' the jaws of the coupler for the next operation. *The suggestion seems to be an afterthought. No such function of the nipple is hinted at in the specifications of the patent. If this were so vital an element in the functioning of the apparatus it is strange that all mention of it was omitted.*" (Emphasis added.)

Paraphrasing this Court's language, if forward shank flex were so vital an element in the functioning of the 798 structure, it is strange indeed that all mention of it was omitted until the patent reached the courthouse. *It cannot in good conscience support this patent.*

**Presumption of Validity**

Of course a patent is presumed to be valid. For many years that was so by reason of judicial decision and now the statute, 35 U.S.C., § 282, so provides. The presumption is rebuttable, however, and when substantial evidence attacking the validity of a patent is introduced the question of patentability is for the Court.

The presumption is based in part upon the assumption that the Patent Office routinely considers the pertinent prior art before a patent is issued. Thus, when it appears that pertinent art was not considered there is no reason for indulging the presumption and it is of little consequence. The courts so hold. In *Jacuzzi Bros.* v. *Berkeley Pump Co.*, 191 F.2d 632, 634 (9th Cir. 1951), the Court said:

> "* * * Even one prior art reference, which has not been considered by the Patent Office, may overthrow the presumption of validity, and, when the most pertinent art has not been brought to the attention of the administrative body, the presumption is largely dissipated. Such is the case here."

To the same effect are *L. S. Donaldson Co.* v. *LaMaur, Inc.*, 299 F.2d 412, 420 (8th Cir. 1962); *Day-Bright Lighting, Inc.* v. *Sandee Mfg. Co.*, 286 F.2d 596, 597 (7th Cir. 1960); *O'Leary* v. *Liggett Drug Co.*, 150 F.2d 656, 664 (6th Cir. 1945); *Cornell* v. *Adams Engineering Co.*, 258 F.2d 874, 875 (5th Cir. 1958); *Elliott & Co.* v. *Youngstown Mfg. Co.*, 181 Fed. 345, 349 (3rd Cir. 1910); *R. Hoe & Co.* v. *Goss Printing Press Co.*, 30 F.2d 271, 274 (2nd Cir. 1929).

Graham urges and the trial court found (Finding XI) that the presumption of validity was not overcome by Deere because the additional art relied upon, particularly Rix and Glencoe, is similar to some of the art relied upon by the Examiner, for example, Petersen. It seems com-

pletely clear however that Glencoe is in fact closer to 798 than any art cited by the Examiner and Graham's own expert definitely considered Glencoe more pertinent than Petersen. He testified, both on direct and cross-examination, that Glencoe has all of the elements of 798 and that the only real difference is in the shank position (R. 530, 560-563), but he classified Petersen along with the "antique art" of harrows and light cultivators, wherein the forces on the pivoted member are generally transverse rather than longitudinal (R. 522 and 527).

It would serve no useful purpose to further review the art which has been fully considered heretofore and we simply submit that both Rix and Glencoe, particularly Glencoe, are pertinent references which were not considered by the Patent Office and the presumption of validity is therefore weakened.

The presumption is not merely weakened by a technical rule, however, it is conclusively overcome by the abundant proof of the whole record, and the Eighth Circuit so held.

**Deere's Clamps and Conduct**

Graham asserts (Brief 32-36, 41 and 42) that Deere coveted, copied, pirated and stole the 798 structure and that Deere's infringement is proof of 798's validity.

The issue of infringement is not before this Court and all of Graham's argument about the Deere clamps and Deere's conduct is relatively immaterial to the question of validity, but a brief response seems proper.

Deere is an old and honored company in the farm implement industry. It dates from the first all steel plow of 1837 which can be viewed in the Smithsonian Institute, and a search of the federal cases for over 100 years will reveal an

extreme dearth of infringement charges against Deere (or John Deere).

Deere produced its complete file of correspondence and memoranda pertaining to the development of its two spring clamps (Def. Ex. 32, R. 844-876) as well as its preliminary and final drawings (Def. Exs. 33 through 46, R. 877-899), and it is completely clear therefrom that Deere made a careful effort to avoid infringement of 798 before it released any clamp for production. Deere carefully studied the patent and the File Wrapper and it carefully designed its clamps to avoid the teachings and claims of the 798 patent. It was entitled to rely upon the patent and the File Wrapper as disclosing the full scope of Graham's claimed invention and one thing is clear beyond all doubt—Deere could have searched the patent and the File Wrapper until "Doomsday" and it could never have found an intimation of the superior shank flex which Graham now urges as the heart of his advance, the superior advantage which Graham says Deere coveted and stole.

Furthermore, when Deere's clamps were tested by Mr. Fishleigh to determine whether the alleged shank flex would occur it was found to be virtually nonexistent (R. 503-506).

Graham argues that Deere's own design engineer, Mr. Hunter, recognized the superior achievement of 798 and he quotes Mr. Hunter's testimony at R. 113, but that testimony shows on its face that all Mr. Hunter was saying was that with the shank below the hinge member, rather than above, there is some advantage in that the shank forces transmitted into the other members of the clamp are compressive forces rather than tensile forces. His testimony certainly cannot be construed as recognizing any superior flexing of the shank.

Graham's whole argument of piracy is based upon the assumption that the Deere clamps do infringe. That issue was not resolved by the Eighth Circuit; it is not before this Court; the major premise of the copying argument is therefore absent and no conclusion can be drawn therefrom. The whole argument should be disregarded.

**Validity Crutches**

Frequently courts rely upon such things as long-felt need, failure of others, difficulty of achievement, sudden displacement of existing devices, commercial success, and immediate copying as indicative of invention, but those considerations are merely makeweights. They are no substitute for probing analysis and they deserve consideration only when invention is truly in doubt. *Toledo Pressed Steel Co.* v. *Standard Parts, Inc.*, 307 U.S. 350, 356, 83 L. Ed. 1334, 59 S. Ct. 897 (1939); *Jungersen* v. *Ostby & Martin Co.*, 335 U.S. 560, 567, 93 L. Ed. 235, 69 S. Ct. 269 (1949); *Great A. & P. Tea Co.* v. *Supermarket Equipment Corp.*, 340 U.S. 147, 153, 95 L. Ed. 162, 71 S. Ct. 127 (1950). The crutches cannot avail here, even if invention were in doubt, because *the crutches do not exist.* There is no evidence of long-felt need—the 798 clamp was quickly designed when the desire arose. There is no evidence of failure by others—in fact Jeoffroy HT-5 was on the market nearly a year before the patent issued. The only commercial success achieved was by Jeoffroy. Other clamps were not displaced—Graham continued with 811; Glencoe remained unchanged, and Cockshutt did not infringe. Finally, there is no evidence of copying by anybody.

**Summation of Validity**

Under this record the conclusion is inescapable that 798 represents mechanical skill only. The structural mod-

ifications were plainly indicated by the art and would have been obvious to one having ordinary skill in the art. The elements as combined performed in a predictable and expected manner and there was no new, surprising or unexpected result, function or consequence. In short, the subject matter as a whole would have been obvious to one having ordinary skill in the art and the Court of Appeals for the Eighth Circuit correctly so ruled.

As this Court said long ago, in *Atlantic Works* v. *Brady*, 107 U.S. 192, 200, 27 L. Ed. 438, 2 S. Ct. 225 (1882), and as it has reiterated many times over:

> "The design of the patent laws is to reward those who make some substantial discovery or invention which adds to our knowledge and makes a step in advance in the useful arts. Such inventors are worthy of all favor. It was never the object of those laws to grant a monopoly for every trifling device, every shadow of a shade of an idea, which would naturally and spontaneously occur to any skilled mechanic or operator in the ordinary progress of manufacture. Such an indiscriminate creation of exclusive privileges tends rather to obstruct than to stimulate invention. It creates a class of speculative schemers who make it their business to watch the advancing wave of improvement, and to gather its foam in the form of patented monopolies, which enable them to lay a heavy tax upon the industry of the country, without contributing anything to the real advancement of the art. It embarrasses the honest pursuit of business with fears and apprehensions of concealed liens and unknown liabilities to law suits and vexatious accountings for profits made in good faith."

No better language could be used to characterize 798. It contributed absolutely nothing to the art, nothing for the benefit of the public. It has been used only as an implement of litigation against Jeoffroy, Cockshutt and now

Deere in an effort to suppress competition, expand unwarrantedly the bounds of monopoly, and diminish the resources available to the public. The issuance of the patent was contrary to the Constitution, the statutes and the judicial rules. It is not entitled to survive and the judgment of the Eighth Circuit should be affirmed.

## POINT II.

### Section 103 Did Not Materially Change the Standards of "Invention" or "Patentability" Established by This Court and the Court of Appeals for the Eighth Circuit Applied Correct Standards.

The foundation of our patent system is Article I, Section 8, Clause 8 of the Constitution, which provides that Congress shall have the power

> "To promote the Progress of Science and useful Arts, by securing for limited Times to Authors and Inventors the exclusive Right to their respective Writings and Discoveries; * * *."

The limited monopolies thus authorized are not given as personal favors, but solely to promote the progress of science and useful arts, and in all cases pertaining thereto the Constitutional purpose, the public interest, is paramount. *Sears, Roebuck & Co.* v. *Stiffel Co.*, 376 U.S. 225, 11 L. Ed. 661, 84 S. Ct. 784 (1964); *Great Atlantic & Pacific Tea Co.* v. *Supermarket Equipment Corp.*, 340 U.S. 147, 95 L. Ed. 162, 71 S. Ct. 127 (1950); *Sinclair & Carroll Co.* v. *Inter-Chemical Corp.*, 325 U.S. 327, 89 L. Ed. 1644, 65 S. Ct. 1143 (1945); *Cuno Engineering Corp.* v. *Automatic Devices Corp.*, 314 U.S. 84, 86 L. Ed. 58, 62 S. Ct. 37 (1941); *Atlantic Works* v. *Brady*, 107 U.S. 192, 27 L. Ed. 438, 2 S. Ct. 225 (1883); *Kendall* v. *Winsor*, 62 U.S. 322, 16 L. Ed. 165 (1859).

Everyone recognizes the "socio-economic" importance of a healthy patent system but there are rather extreme variations in attitude as to what is a healthy system and it has required the eternal vigil of this Court to protect the public interest against the incessant onslaught of those who have sought private gain at public expense.

**Judicially Established Standards**

It is uniformly agreed that prior to 1952 the only statutory conditions for patentability (aside from the requirements of the application, etc.) expressly enumerated by Congress were *novelty* and *utility*, but at least since *Hotchkiss* v. *Greenwood*, 52 U.S. (11 How.) 248, 13 L. Ed. 683 (1850), this Court has held that novelty and utility alone are not enough to sustain a patent, that if the Constitutional purpose is to be served there must be something more to justify the grant of a statutory monopoly. That something more, consistently required, has been "invention" or "discovery".

But what is "invention" or "discovery"? The statutes prior to 1952 did not attempt to define and it was necessary for this Court to establish a test.

Apparently the first attempt was *Hotchkiss* v. *Greenwood, supra*, in which Mr. Justice Nelson said:

> "* * * unless more ingenuity and skill * * * were required * * * than were possessed by an ordinary mechanic acquainted with the business, there was an absence of that degree of skill and ingenuity which constitute essential elements of every invention. In other words, the improvement is the work of the skillful mechanic, not that of the inventor."

This statement was repeated and paraphrased in many cases and in course of time the "expected skill of the art" became the basic test.

The critics, including Graham and most of the *amicus curiae*, assert, however, that some time prior to 1952 this Court developed a "passion for overturning patents", departed from the *Hotchkiss* rule and laid down more exacting "standards of invention" not required or authorized by the statutes or the Constitution. *This charge is unfounded.* While there have been some variations in phraseology, this Court has consistently applied the basic test of *Hotchkiss* that "invention" requires "an advance in the art somewhat beyond the expected skill of the art".

To demonstrate, let us review a few of the cases, and since the case at bar involves a "combination" patent, we will limit our review to cases of that nature.

In *Reckendorfer* v. *Faber*, 92 U.S. (2 Otto.) 347, 23 L. Ed. 719 (1876), the patentee attached a rubber eraser to a lead pencil and claimed the combination. In holding the patent invalid, the Court said:

> "* * * An instrument or manufacture which is the result of *mechanical skill* merely is not patentable. *Mechanical skill is one thing; invention is a different thing.* Perfection of workmanship, however much it may increase the convenience, extend the use, or diminish expense, is not patentable. *The distinction between mechanical skill, with its conveniences and advantages, and inventive genius, is recognized in all the cases.*" (Emphasis added.)

In *Atlantic Works* v. *Brady*, 107 U.S. 192, 27 L. Ed. 438, 2 S. Ct. 225 (1883), the patentee installed flood tanks and front mounted screws on a dredgeboat and claimed the combination. In holding the patent invalid for lack of invention, Mr. Justice Bradley said:

"The process of development in manufacturers creates a constant demand for new appliances, which *the skill of ordinary head workmen and engineers* is generally adequate to devise, and which, indeed, are the natural and proper outgrowth of such development. Each step forward prepares the way for the next, and each is usually taken by spontaneous trials and attempts in a hundred different places. To grant to a single party a monopoly of every slight advance made, *except where the exercise of invention, somewhat above ordinary mechanical or engineering skill, is distinctly shown,* is unjust in principle and injurious in its consequences.

"The design of the patent laws is to reward those who make some substantial discovery or invention, which adds to our knowledge and makes a step in advance of the useful arts. Such inventors are worthy of all favors. It was never the object of those laws to grant a monopoly for every trifling device, every shadow of a shade of an idea, which would naturally and spontaneously occur to *any skilled mechanic or operator* in the ordinary progress of manufacturers.

"* * * What, then, did he invent? *Did he make a selection and combination of these elements that would not have occurred to any ordinary skilled engineer called upon, with all this previous knowledge and experience before him,* to devise the construction of a strong dredge-boat for use at the mouth of the Mississippi? We think not. We think that there is no reasonable ground for any such pretention." (Emphasis added.)

In *Concrete Appliances Co.* v. *Gomery,* 269 U.S. 177, 70 L. Ed. 222, 46 S. Ct. 42 (1925), the patent was for a rather complicated apparatus for transferring concrete or other plastic materials from a suitable source of supply to working points on a building or other structure in the course of construction. Commencing at page 179 Mr. Justice Stone said:

"The several elements in the petitioner's claims which we have enumerated embrace familiar devices long in common use, separately or in smaller groups, both in this and in kindred mechanical arts. It is not argued that there is any novelty in such units or groups and the only serious question presented is whether, in combination in the apparatus described, they constitute an invention. That the combination embodied in the described apparatus produces a useful result in the mechanical arts and in modified form is widely used in building operations is established. Our inquiry therefore must be addressed to the question *whether the combination* is novel and whether it *passes the line sometimes tenuous and difficult of ascertainment which separates mechanical skill from invention.* The pursuit of this inquiry involves a consideration of the state of the art prior to Callahan's application, of which elaborate proof was made in the trial court."

Continuing at page 185:

"* * * The adaptation independently made by engineers and builders of these familiar appliances to the movement and distribution of wet concrete in building operations and the independent patent applications, within a comparatively short space of time, for devices for that purpose are in themselves persuasive evidence that this use in combination of well known mechanical elements *was the product only of ordinary mechanical or engineering skill and not of inventive genius.* Atlantic Works v. Brady * * *. It is but 'the suggestion of that common experience, which arose spontaneously and by a necessity of human reasoning, in the minds of those who had become acquainted with the circumstances with which they had to deal.' * * * This progressive adaptation, much of which preceded and some of which was co-temporaneous with the Callahan adaptation, of well known devices to new but similar uses, *'is but the display of the expected skill of the calling, and involves only the exercise of the ordinary faculties of reasoning upon the material supplied by a*

*special knowledge, and the facility of manipulation which results from its habitual and intelligent practice.'* * * * No novel elements were used by Callahan in his device. *We are unable to find that their use in combination was more than the application to them of mechanical skill in the course of mutual development and expansion of the art.* The decree of the court below is affirmed." (Emphasis added).

Ten years later, Mr. Justice Stone again spoke for the Court in *Altoona Publix Theatres* v. *American Tri-Ergon Corporation,* 294 U.S. 477, 79 L. Ed. 1005, 55 S. Ct. 455 (1935). The patent claims in issue related to a device for securing uniformity of speed in machines used for recording and reproducing talking motion pictures and are referred to as the "flywheel claims." In holding those claims invalid for lack of invention the Court said, at page 486:

"An improvement to an apparatus or method, to be patentable, must be *the result of invention, and not the mere exercise of the skill of the calling or an advance plainly indicated by the prior art.* * * * The inclusion of a flywheel in any form of mechanism to secure uniformity of its motion has so long been standard procedure in the field of mechanics and machine design that the use of it in the manner claimed by the present patent *involved no more than the skill of the calling.* * * * Patents for devices for use both in the motion picture art and in the art of sound reproduction, * * *, plainly foreshadowed the use made of the flywheel in the present patent, if they did not anticipate it. The patentees brought together old elements, in a mechanism involving no new principle, to produce an old result, greater uniformity of motion. However skillfully this was done, and even though there was produced a machine of greater precision and a higher degree of motion-constancy, and hence one more useful in the art, *it was still the product of skill, not of invention.*" (Emphasis added).

None of the critics have stated just when it was that this Court acquired its "passion against patents", departed from *Hotchkiss* v. *Greenwood,* and started applying new, stricter and unwarranted standards of invention. Some have intimated twenty to twenty-five years before the 1952 Act. *Altoona* certainly falls within that period and *we see no change of standard.* Perhaps we are a little early, however, so consider *Toledo Pressed Steel Co.* v. *Standard Parts, Inc.,* 307 U.S. 350, 83 L. Ed. 1334, 59 S. Ct. 897 (1939), a case which surely must fall within the "passion" period. The patent covered a burner for use in outdoor warning signals such as construction torches and truck flares. Mr. Justice Butler wrote the opinion and construed the claims at page 353 as follows:

> "* * * Considered together, unobscured by artificiality in their statement, it fairly may be said that they (the claims) show that all that the patentees did was to put over the wick of a torch, well known in the art, an inverted metal cup-like cap having holes in its sides, some to let in air for combustion and others to let out flame. The cap was also well known and had been used as a part of other devices for the protection of kerosene and other flames."

Holding the patent invalid for lack of invention, he said at page 355:

> "The torch body was old in the art to which it belonged. The cap, as part of devices used in other fields, was old and useful to prevent extinguishment of flames by wind or rain and to permit flames to extend through holes to the open air. The problem patentees set for themselves was to prevent extinguishment while preserving usefulness of the flames as warning signals. They solved it by merely bringing together the torch and cap. As before, the torch continued to produce a luminescent, undulating flame, and the cap continued to let in air for combustion, to protect the flame from wind

> and rain and to allow it to emerge as a warning signal. They performed no joint function. Each served as separately it had done. The patented device resulted from mere aggregation of two old elements and not from invention or discovery. * * * On the records before us, *it is impossible to hold that production of the patented device required more than mechanical skill and originality attributable to those familiar with the art of protecting flames of kerosene and other burners.*" (Emphasis added).

Clearly the test was still "the skill of the art."

Then came *Cuno Engineering Corp.* v. *Automatic Devices Corp.*, 314 U.S. 84, 86 L. Ed. 58, 62 S. Ct. 37 (1941), which undoubtedly has received more of the barb of criticism than any other case. The patent was for an automatic cigar or cigarette lighter for use principally in automobiles. Claim 2, which is typical, provided:

> "In a device of the class described, a removable heating member having an electrical heating unit, a socket for receiving and holding said heating member, electrical current supply terminals, means for removing said heating member to a position for establishing an energizing circuit to said heating unit, and means responsive to the temperature of said heating unit for interrupting said energizing circuit."

At the outset, page 88, the Court said:

> "* * * It is our opinion that the Mead device was not the result of invention but a *'mere exercise of the skill of the calling,' an advance 'plainly indicated by the prior art.'* "

After reviewing the art and concluding that the accomplishment of the Mead device was to incorporate a thermostatic control in a wireless or cordless lighter, the Court said, commencing at page 89:

"To incorporate such a thermostatic control in a so-called 'wireless' or 'cordless' lighter *was not to make an 'invention' or 'discovery' within the meaning of the patent laws.* As we have shown, both the thermostatically controlled heating unit and the lighter with a removable plug bearing the heating unit were disclosed by the prior art. *More must be done than to utilize the skill of the art in bringing old tools into new combinations.* * * * Respondent, however, contends that wholly new functions were involved in Mead's conception, viz., relieving the operator of the necessity of manually holding the plug in closed-circuit position, and automatically and permanently opening the circuit when the heating coil was at the temperature predetermined for its proper use. And respondent argues, Mead's new combination had an entirely different mode of operation from any 'wireless' lighter then in existence and from any thermostatically controlled electric device.

"We may concede that the functions performed by Mead's combination were new and useful. But that does not necessarily make the device patentable. Under the statute (35 U.S.C.A., § 31, R.S. § 4886) the device must not only be 'new and useful,' it must also be an 'invention' or 'discovery.' * * * Since *Hotchkiss* v. *Greenwood,* 11 How. (U.S.) 248, 267, 13 L. Ed. 683, 691 decided in 1851, *it has been recognized that if an improvement is to obtain the privileged position of a patent more ingenuity must be involved than the work of a mechanic skilled in the art.* * * * 'Perfection of workmanship, however much it may increase the convenience, extend the use, or diminish expense, is not patentable.' * * * The principle of the Hotchkiss case applies to the adaption or combination of old or well known devices for new uses * * * *That is to say the new device, however useful it may be, must reveal the FLASH OF CREATIVE GENIUS not merely the skill of the calling.* If it fails, it has not established its right to a private grant on the public domain.

"Tested by that principle Mead's device was not patentable. *We cannot conclude that his skill in making this contribution reached the level of inventive genius which the Constitution* (Art. 1, § 8) *authorizes Congress to reward.* He merely incorporated the well-known thermostat into the old 'wireless' lighter to produce a more efficient, useful, and convenient article. * * * A new application of an old device may not be patented if the 'result claimed as new is the same in character as the original result' * * * even though the new result had not before been contemplated. * * * Certainly the use of a thermostat to break a circuit in a 'wireless' cigar lighter is analogous to or the same in character as the use of such a device in electric heaters, toasters or irons, whatever may be the difference in detail of design. *Ingenuity was required to effect the adaptation, but no more than that to be expected of a mechanic skilled in the art.*

"Strict application of that test is necessary lest in the constant demand for new appliances the heavy hand of tribute be laid on each slight technological advance in an art. * * *

*"Such considerations prevent any relaxation of the rule of the Hotchkiss case as respondent would seem to desire."* (Emphasis added).

In the course of the opinion, Mr. Justice Douglas coined a phrase "FLASH OF CREATIVE GENIUS" and the critics would have us believe that the Court thereby established a new test which would require that the inventor leap from bed in the middle of the night with his concept suddenly born and shouting, "Eureka! Eureka!" *The case is not subject to any such interpretation.* The Court did not lay down any new test; it merely reasserted in picturesque language the established test and again forcefully and sternly stated that if the patent system is to survive, if the Constitutional purpose is to be carried out, there must be no

relaxation of the rule, the *Hotchkiss* rule if you please, that a valid patent must mark an advance beyond the expected skill of the art.

It is no doubt true that during the period from about 1930 to 1950 many more patents were voided than in prior years, both by this Court and by the lower courts; however, we submit that it was not because of a new test or standard of invention, but rather because of a firmer insistence upon compliance with the established standard. And, that is not at all surprising in view of the tremendous flood of patent applications and patents in recent years. For example in the 43 years from 1793 to 1836 only about 10,000 patents were issued but by 1936 they were pouring out of the Patent Office at a rate in excess of 3,000 per month. (Journal of the Patent Office Society, Centennial Number, "History of the Patent Office," July 1936, Vol. 18, P. 230). Of course, recent years have seen industrial development on a grand scale, but it is highly doubtful that the number of inventions has increased in the indicated proportion. In fact patent litigation of recent years shows beyond any doubt that there had developed in the Patent Bar and in the Patent Office a loose approach to patentability which had lost sight of the Constitutional purpose, with a resulting grant of patent monopolies upon a host of trivial devices, products and processes that marked no true advance and were not entitled to a privileged position. Makeweights, such as commercial success, were substituted for the true test of invention and the appalling result of a relaxed standard, predicted by Mr. Justice Bradley in *Atlantic Works* v. *Brady,* was fullborn. *It was imperative therefore, that this Court, the final guardian of the public interest, refocus attention upon the Constitutional purpose and reaffirm the minimum standard.* It did so in *Cuno.*

Then came *Great Atlantic & Pacific Tea Co.* v. *Supermarket Equipment Corp.*, 340 U.S. 147, 95 L. Ed. 162, 71 S. Ct. 127 (1950), the last decision by this Court on patentability. The patent covered a combination for a cashier's counter equipped with a three-sided frame, or rack, with no top or bottom, kept on the counter by guides, which, when pushed or pulled would move groceries deposited within it by a customer to the checking clerk and leave them there when pushed back to repeat the operation. Both courts below held the patent valid and this Court reversed for lack of invention. Beginning at page 150 the Court, through Mr. Justice Jackson,[6] said:

> *"What indicia of invention should the courts seek in a case where nothing tangible is new, and invention, if it exists at all, is only in bringing old elements together?*
>
> "While this court has sustained combination patents, it never has ventured to give a precise and comprehensive definition of a test to be applied in such cases. The voluminous literature which the subject has excited discloses no such test. It is agreed that the key to patentability of a mechanical device that brings old factors into cooperation *is presence or lack of invention.* In course of time the profession came to employ the term 'combination' to imply its presence and the term 'aggregation' to signify its absence, thus making antonyms in legal art of words which in ordi-

---

6. The critics of this Court point with glee to the remarks of Mr. Justice Jackson in his dissent in *Jungersen* v. *Ostby and Barton Co.*, 335 U.S. 560, 572, 93 L. Ed. 235, 69 S. Ct. 269 (1949), as follows:

> "* * * I doubt that the remedy for such Patent Office passion for granting patents is an equally strong passion in this Court for striking it down so that the only patent that is valid is one this Court has not been able to get its hands on."

They should note also that he wrote for a unanimous Court in *A. & P.*

nary speech are more nearly synonyms. However useful as words of art to denote in short form than an assembly of units has failed or has met the examination for invention, their employment as tests to determine invention results in nothing but confusion. *The concept of invention is inherently elusive when applied to combinations of old elements.* This, together with the imprecision of our language, have counseled courts and abstracters to be cautious in affirmative definitions of rules on the subject.

"The negative rule accrued from many litigations was condensed about as precisely as the subject permits in Lincoln Engineering Co. v. Stewart-Warner Corp., 303 U.S. 545, 549, 82 L. Ed. 1008, 1010, 58 S. Ct. 662: 'The mere aggregation of a number of old parts or elements which, in the aggregation, perform or produce *no new or different function or operation* than that theretofore performed or produced by them, is not patentable invention.' To the same end is Toledo Pressed Steel Co. v. Standard Parts, Inc., 307 U.S. 350, 83 L. Ed. 1334, 59 S. Ct. 897, and Cuno Engineering Corp. v. Automatic Devices Corp., 314 U.S. 84, 86 L. Ed. 58, 62 S. Ct. 37. *The conjunction or concert of known elements must contribute something; only when the whole in some way exceeds the sum of its parts is the accumulalation of old devices patentable.* Elements may, of course, especially in chemistry or electronics, take on some new quality or function from being brought into concert, but this is not a usual result of uniting elements old in mechanics. *The case is wanting in any UNUSUAL OR SURPRISING CONSEQUENCES from the unification of the elements here concerned, and there is nothing to indicate that the lower courts scrutinized the claims in the light of this rather severe test.*

"Neither court below has made any finding that old elements which made up this device perform any *additional or different function* in the combination than they perform out of it. This counter does what a store counter always has done—it supports merchan-

dise at a convenient height while the customer makes his purchases and the merchant his sales. The three sided rack will draw or push goods put within it from one place to another—just what any such a rack would do on any smooth surface—and the guide rails keep it from falling or sliding off from the counter, as guide rails have ever done. Two and two have been added together, and still they make only four.

*"Courts should scrutinize combination patent claims with a care proportioned to the difficulty and improbability of finding invention in an assembly of old elements.* The function of a patent is to add to the sum of useful knowledge. Patents cannot be sustained, when on the contrary, their effect is to subtract from former resources freely available to skilled artisans. *A patent for a combination which only unites old elements with no change in their respective functions, such as is presented here, obviously withdraws what already is known into the field of its monopoly and diminishes the resources available to skillful men.* This patentee has added nothing to the total stock of knowledge, but has merely brought together segments of prior art and claims them in congregation as a monopoly.

"The Court of Appeals and the respondent both lean heavily on evidence that this device filled a long felt want and has enjoyed commercial success. But commercial success without invention will not make patentability. Toledo Pressed Steel Co. v. Standard Parts, Inc., (U.S.) supra. The courts below concurred in finding that every element here claimed (except extension of the counter) was known to prior art. When, for the first time, those elements were put to work for the supermarket type of stores, although each performed the same mechanical function for them that it had been known to perform, they produced results more striking, perhaps, than in any previous utilization. To bring these devices together and apply them to save the time of a customer and checker was a good idea,

but scores of progressive ideas in business are not patentable, and we conclude on the findings below that this one was not.

"* * * The defect that we find in this judgment is that *a standard of invention appears to have been used that is less exacting than that required where a combination is made up entirely of old components.* It is on this ground that the judgment below is reversed." (Emphasis added).

What is the effect of *A&P*? Did this Court finally abandon *Hotchkiss* v. *Greenwood* and the long line of cases reaffirming that rule? Did this Court abandon the basic test of invention requiring an advance beyond the expected skill of the art? We submit that *IT DID NOT*. The basic test was fully retained and the Court merely stated more specifically some guideposts for determining when a combination of old elements represents an advance beyond the expected skill of the art.

Old mechanical elements are the tools with which ordinary engineers and mechanics regularly work. It is obvious, predictable and expected that in the normal course of their work they will select, reform and assemble old elements for hundreds of different purposes as the need arises *because that is their business.* It is expected and predictable that in so doing they will make improvements, reduce wear, increase efficiency and economy, extend use, apply old devices to new uses, and make better, more useful and successful devices *because that is their business.* All such things are within the expected skill of the calling; they are obvious, non-inventive and unpatentable.

Occasionally, however, an assembly of old elements may produce an unusual, unexpected, unobvious and surprising consequence. Then, and only then, is it inventive and patentable. The surprising consequence may be a

wholly new result or ultimate function; it may be a new or different function of a single element, or it may be a new or different combined function of several elements. The key is the "unexpected", the "surprising", the "unobvious" consequence which results from the combination. If there is such a consequence, the skill of the art has been exceeded; the art has been advanced and there is invention.

This is what *A.&P.* stands for and it is entirely consistent with *Hotchkiss*. *A&P* was merely an application of the basic standard of invention to the narrow and specific problem of combination patents.

Such was the state of the law when the Patent Act of 1952 was adopted, so let us see what the statute did to it.

**Section 103 and Its Effect**

In Section 103 Congress for the first time expressly enumerated conditions for patentability in addition to novelty and utility, to wit:

"§ 103. Conditions for Patentability;

Non-Obvious Subject Matter.

A patent may not be obtained though the invention is not identically disclosed or described as set forth in Section 102 of this title, if the differences between the subject matter sought to be patented and the prior art are such that the subject matter as a whole would have been obvious at the time the invention was made to a person having ordinary skill in the art to which said subject matter pertains. Patentability shall not be negatived by the manner in which the invention was made." (July 19, 1952 c. 950, § 1, 66 Stat. 798, 35 U.S. C. § 103.)

What does this new section mean?

**The First Sentence**

On its face *the first sentence* is nothing more than a paraphrase of the basic test of invention which this Court had consistently applied. It is not in the precise language of any single case but it is unquestionably a substantial paraphrase of the language of many cases.

This view is fully confirmed by both the Senate and House Reports, S. Rep. No. 1979, 82nd Cong., 2nd Sess. (1952), and H.R. Rep. No. 1923, 82nd Cong., 2nd Sess. (1952), as follows:

> "Section 103, for the first time in our statute, provides *a condition that exists in the law and has existed for more than 100 years, but only by reason of decisions of the courts.* An invention which has been made, and which is new in the sense that the same thing has not been made before, may still not be patentable if the difference between the new thing and what was known before is not considered sufficiently great to warrant a patent. *That has been expressed in a large variety of ways in decisions of the courts* and in writings. Section 103 states this requirement in the title. It refers to the difference between the subject matter sought to be patented and the prior art, meaning what was known before as described in Section 102. If the difference is such that the subject matter as a whole would have been *obvious at the time to a person skilled in the art,* then the subject matter cannot be patented.
>
> "That provision *paraphrases language which has often been used in decisions of the courts,* and the section is added to the statute for uniformity and definiteness. This section should have a stabilizing effect and minimize great departures which have appeared in some cases." (Emphasis added).

A majority of the circuit courts have expressly held that the first sentence did not establish any new test but

merely codified a hundred years of decisional patent law, including *Cuno* and *A&P*. *Stanley Works* v. *Rockwell Mfg. Co.*, 203 F.2d 846 (3rd Cir. 1953); *General Motors Corp.* v. *Estate Stove Co.*, 203 F. 2d 912 (6th Cir. 1953); *Interstate Rubber Products Corp.* v. *Radiator Specialty Co.*, 214 F.2d 546 (4th Cir. 1954); *Wasserman* v. *Burgess & Blacher Co.*, 217 F.2d 402 (1st Cir. 1954); and see *John Blue Co.* v. *Dempster Mill Mfg. Co.*, 275 F.2d 668 (8th Cir. 1960). But in two opinions by the late Judge Learned Hand, *Lyon* v. *Bausch & Lomb Optical Co.*, 224 F.2d 530 (2nd Cir. 1955), and *Reiner* v. *I. Leon Co.*, 285 F.2d 501 (2nd Cir. 1960), the Second Circuit took the position that it was the intent of Congress in Section 103 to restore *as a statutory command* the *Hotchkiss* rule and to repudiate all the intervening decisions which might indicate any stricter standard.

As might be expected, Graham and several of the *amicus curiae* strongly urge that the reasoning of Judge Hand is infallible, that the view he announced is correct and that the contrary circuits are wrong. We submit that *exactly the converse is true*. Section 103 no more contains the language of *Hotchkiss* v. *Greenwood* than it does the language of any other case. It is a paraphrase of the composite rule of many cases. The Senate and House Reports did not single out or mention any case or any court; they said that the rule of Section 103 "has been expressed in a large variety of ways in decisions of the *courts* and in writings" and that the provision "*paraphrases* language which has often been used in *decisions* of the *courts*".

Judge Hand's analysis, and the argument of Graham and the joining *amicus curiae*, is that decisions of this Court in the two decades before 1952 had departed from *Hotchkiss* v. *Greenwood*, had laid down more severe and obscure tests of invention, and that it was the intention of Congress to repudiate those stricter rules and return to *Hotchkiss*. We

submit, however, as we have shown in the preceding section of this brief, that the criticism of this Court's so-called stricter decisions is unwarranted, that the Court had not changed the rule, that it merely had insisted, as in *Cuno*, upon a strict adherence to the basic rule and that, within the bounds of the basic rule, it had set out in *A&P* a more thorough and complete statement as to when *a combination patent* will satisfy the basic standards.

We submit that the first sentence of Section 103 adopts as statutory law the requirements of invention which had been developed by this Court during a hundred years of labor and toil to preserve the Constitutional purpose and there is neither logic, legislative history, nor public policy to support the proposition that Congress intended to repudiate all of the intervening years and return to the embryo pronouncement of *Hotchkiss* v. *Greenwood* as the *alpha* and *omega* of inventive standards.

It is urged by some that since the Senate and House Reports state, among other things, that the "purpose of the proposed legislation is to *revise* and codify the laws relating to patents" (emphasis added by the contenders), the first sentence of Section 103 must be considered as a revision rather than a codification of existing law. In support of that argument they cite *Aro Manufacturing Co.* v. *Convertible Top Replacement Co.*, 377 U.S. 476, 12 L. Ed. 2nd 457, 84 S. Ct. 1526 (1964), in which this Court concluded that Section 271 of the Act (35 U.S.C., § 271) repudiated *Mercoid Corp.* v. *Mid-Continent Investment Co.*, 320 U.S. 661, 88 L. Ed. 376, 64 S. Ct. 268 (1944), and reinstated the doctrine of contributory infringement as it had been developed by the decisions prior to *Mercoid*. *The argument misses the mark.* Obviously, some sections of the statute represent revision. Section 271 on its face announces a rule which is contrary to *Mercoid* and logic compels the conclusion that there was

a revision. The same thing is not true of Section 103. The language there is consistent with and paraphrases the existing law; the Senate and House Reports say so, and the result is codification—not revision. *Amicus curiae* for the Illinois State Bar agree, Brief p. 4: "This section of the statute codified the law."

Graham and other *amicus curiae,* in support of their arguments, advert to the views expressed by various commentators on the Act, such as Senator Joseph C. O'Mahoney, Chairman of the Sub-Committee on Patents, Trademarks and Copyrights, Judge Giles S. Rich, of the United States Court of Customs and Patent Appeals, who was one of the drafters of the Act, Mr. P. J. Federico, Examiner-in-Chief of the United States Patent Office and one of the principal drafters of the Act, Mr. S. J. Crumpacker, who was a member of the House Judiciary Committee in 1952 and played an active part in the drafting and passing of the Act, and Mr. Charles J. Zinn, the House Committee's law revision counsel. We appreciate the views of such commentators and it may well be that some of their intents and purposes were not fully carried out in the Act and are not being carried out by the courts, as they interpret the Act, but we cannot substitute commentaries for the express language of the statute, the avowed purposes stated in the accompanying Senate and House Reports and indicative remarks from the floor, *e.g.:*

> "Mr. Wiley. I wonder whether the Senator will withhold objection * * *. The bill provides for a codification of the patent laws, and the House of Representatives has worked on this subject for 3 or 4 years. The bill simply constitutes a restatement of the patent laws of the United States." 98 Cong. Rec. 9096, 82nd Cong., 2nd Sess. (July 3, 1952).
>
> "Mr. Saltonstall. Mr. President, will the Senator from Nevada tell us the purpose of the bill?

"Mr. McCarran. The bill would codify the patent laws of the United States. It is under the able guidance of the Senator from Wisconsin (Mr. Wiley).

"Mr. Saltonstall. I am not a patent lawyer, but I know patents are a very technical subject. Does the bill change the law in any way or only codify the present patent laws?

"Mr. McCarran. It codifies the present patent laws. * * *" 98 Cong. Rec. 9323, 82nd Cong., 2nd Sess. (July 4, 1952).

**The Second Sentence**

Up to this point we have analyzed only the first sentence of Section 103 and, of course, the second sentence must be considered. It says:

"Patentability shall not be negatived by the manner in which the invention was made."

Graham and the *amicus curiae* urge that this sentence was aimed squarely at the "flash of creative genius" statement of the *Cuno* case, which was perhaps the "greatest departure" from *Hotchkiss*. The "Revision Notes" which are a part of the Senate Report lend credence to this view in the following statement:

"The second sentence states that patentability as to this requirement (non-obvious subject matter) is not to be negatived by the manner in which the invention was made, that is, it is immaterial whether it resulted from long toil and experimentation or from a flash of genius."

Several of the circuit courts have held that it was the intent of the last sentence of Section 103 to eliminate any requirement of a "flash of genius". *Pacific Contact Laboratories* v. *Solex Laboratories*, 209 F.2d 529 (9th Cir. 1954);

*R. M. Palmer Co.* v. *Luden's Inc.*, 236 F.2d 496 (3rd Cir. 1956). We have no particular quarrel with this conclusion. The sentence seems clear enough and the legislative material indicates the intent. We point out again, however, as we did at pages 56-57, *supra,* and as Judge Stephens for the Ninth Circuit did in *Pacific Contact Laboratories* v. *Solex Laboratories, supra,* that the phrase "flash of creative genius" as used by Mr. Justice Douglas in the *Cuno* case was never intended to establish any new rule or any requirement of "sunburst conception"; it was merely a picturesque selection of language and the long standing rule requiring an advance beyond the expected skill of the art was expressly reaffirmed therein. Rejection of the phrase "flash of creative genius" therefore changes no law and does no harm to this Court's guardianship of the Constitutional purpose.

A somewhat ancillary matter of terminology or doctrine posed by Judge Rich in his article, "The Vague Concept of 'Invention' as Replaced by Sec. 103 of the 1952 Patent Act", 46 Journal of the Patent Office Society 855 (Dec. 1964), merits some special attention. His thesis is that the design of Section 103 was to eliminate entirely "invention" as a requirement of patentability. He asserts that under the 1952 Act there are only three conditions of patentability, to wit: novelty, utility and non-obvious subject matter, and he was disappointed that both the Senate and House Reports stated that one of the "major changes or innovations in the title (Title 35) consist of incorporating a requirement for *invention* in Section 103." (Emphasis added). He is further disappointed that the courts, even Judge Hand in the *Bausch & Lomb* and *Reiner* cases, continue to talk of the requirement of invention under Section 103. He insists that in each *new* process, machine, manufacture, composition of matter, or new improvement thereof, there is invention and the question should be whether

the invention meets the conditions of patentability, *i.e.*, novelty, utility and non-obvious subject matter. He insists that such was the intent of the Act and that by shifting the approach the problems resulting from the "vague concept of invention" would be avoided. He has many disciples and on first blush his doctrine sounds good, but what does it really achieve? The concept of "invention" is thoroughly ingrained in our patent system and there can be no doubt of the basic standards to be applied. We fail to see where anything would be accomplished by changing the name of the condition of patentability from "invention" to "non-obvious subject matter". Nomenclature may more precisely define problems but it rarely solves them and when a change of nomenclature is attempted some of the wisdom of the past may be lost.

In summary, as to the effect of Section 103, we respectfully submit that it paraphrased and adopted the test of invention established by this Court as a condition of patentability from *Hotchkiss* to *A&P;* there was no intent to repudiate anything except the "flash of genius" phrasing; and this Court's established standards are still proper under the statute.

When the test is applied to a specific case it makes no real difference whether we inquire: "Was there merely an exercise of the skill of the calling, an advance plainly indicated by the prior art?" or "Was the subject matter as a whole obvious to one having ordinary skill in the art?" The phrasing does not change the inquiry. We are still looking for the unexpected, the unobvious, the surprising thing which marks an advance in the art of sufficient consequence to justify the grant of a statutory monopoly. We must always inquire: (1) What was the problem? (2) What was done? (3) What was the state of the art? (4) What was the level of ordinary skill? (5) What was achieved? and

(6) Was it unexpected, surprising or unobvious to one having ordinary skill in the art?[7]

**Constitutionality of Section 103**

No point of constitutionality has been raised below and that question is not here for review. Since the question of constitutionality of Section 103 has been discussed by some of the *amicus curiae*, however, we will comment briefly.

We have no doubt that Section 103 is *per se* a proper exercise of the power granted to Congress under Article I, Section 8, Clause 8 of the Constitution, particularly when it is construed (as we think it should be) as a mere adoption of the minimum standards of "invention" or "patentability" which this Court had established.

If, however, the section is construed (as some contend it should be) as an attempt by Congress to overrule the former decisions of this Court and establish a test of "invention" or "patentability" which is less strict, it would be unconstitutional.

For example, this Court said in *A&P* that in order for a combination of old elements to involve invention it must produce some unexpected or surprising consequence. If it does not do so it does not promote the progress of science or useful arts and Congress has no power to authorize a patent

---

7. In the present case it is not necessary to determine which of these inquiries are fact questions that may be set aside under Rule 52a, Federal Rules of Civil Procedure, only if clearly erroneous, and which are law questions that may be set aside if the appellate court merely disagrees with the trial court. We have assumed under Point I that they are all questions of fact and we have shown, as the Eighth Circuit ruled, that the trial court was clearly wrong. We believe however that the ultimate question of "invention" or "patentability" is one of law. See *Great A. & P. Tea Co.* v. *Supermarket Equipment Corp., supra; Armour & Co.* v. *Wilson & Co.*, 274 F.2d 143, 151 (7th Cir. 1960); and Rich, "The Vague Concept of 'Invention' As Replaced By § 103 of the 1952 Patent Act", 46 Journal of the Patent Office Society 855, 872, note 36.

monopoly for such a device. Thus, if Section 103 is construed as an attempt by Congress to overrule A&P and authorize the grant of a patent upon a combination of old elements which does not achieve any unexpected or surprising consequence it would be an attempt by Congress to authorize a patent for a device which does not in fact promote the progress of science or useful arts, and it would be unauthorized.

Congress has broad power concerning the patent system but it has no power to authorize patents which do not serve the constitutional purpose. We do not believe it attempted to do so in Section 103.

**798 Revisited**

Turning back to 798 we believe it should now be clear beyond any doubt that:

(1) In the *Jeoffroy* and *Cockshutt* cases the Fifth Circuit found invention in the achievement of "an old result in a cheaper and otherwise more advantageous way" a "better result than the prior art afforded", and those tests are inadequate under the decisions of this Court and under § 103 of the statute.

(2) In the case at bar the trial court phrased its finding or conclusion of invention in the words of § 103 but both the subsidiary findings of fact and the ultimate finding of "invention" or "non-obvious subject matter" were unsupported by the evidence and were clearly erroneous.

(3) The Court of Appeals for the Eighth Circuit properly applied both the decisions of this Court and § 103 and correctly found the 798 patent invalid for lack of "invention" or "non-obvious subject matter".

## CONCLUSION

In conclusion, we respectfully submit that Patent No. 2,627,798 is invalid and the judgment of the Court of Appeals for the Eighth Circuit should be affirmed.

Respectfully submitted,

W. W. GIBSON AND
S. TOM MORRIS,
630 Amarillo Building,
Amarillo, Texas,

AND

THOMAS E. SCOFIELD,
1325 Rialto Building,
Kansas City 6, Missouri,
*Attorneys for Respondents.*

ILE COPY

Office-Supreme Court
FILED
FEB 26 196
JOHN F. DAVIS, CL

IN THE

# Supreme Court of the United States

October Term, 1964

No. [redacted] 11

WILLIAM T. GRAHAM, and GRAHAM PLOW, INC.,
*Petitioners,*

v.

JOHN DEERE COMPANY OF KANSAS CITY, and DEERE & COMPANY, *Respondents*

**Amicus Curiae Brief Of The Patent, Trade-Mark And Copyright Section Of The State Bar Of Texas (With The Consent Of The Board Of Directors Of The State Bar Of Texas)**

J. VINCENT MARTIN
ALFRED H. EVANS
First City National Bank Bldg.
Houston, Texas 77002

*Counsel for the Patent, Trade-mark and Copyright Section of the State Bar of Texas*

*Of Counsel:*
RUSSELL E. SCHLORFF
Houston, Texas

*Alpha Law Brief Co., M & M Bldg., Houston, Texas 77002*

## SUBJECT INDEX


| | Page |
|---|---|
| I. Preliminary Statement | 1 |
| II. Argument | 2 |
| Summary of Argument | 2 |
| Point A - The legislative history of the second sentence of §103 clearly reveals the legislative intent to eliminate the "flash of creative genius" test of the *Cuno* case | 3 |
| Point B - Point A above is supported by the opinions of many Courts | 5 |
| Point C - The elimination of the "flash of creative genius" test by §103 is in the public interest | 9 |
| III. Conclusion | 9 |
| Certificate of Service | 10 |


## INDEX OF AUTHORITIES


| CASES | Page |
|---|---|
| Cuno Engineering Corp. v. Automatic Devices Corp., 314 U.S. 84, 62 S.Ct. 37, 86 L.Ed. 58 (1941) | 2 |
| E. J. Brooks Co. v. Stoffel Seals Corp., 266 F.2d 841, 121 USPQ 333 (2 Cir. 1959), cert.den. 361 U.S. 883 | 5 |
| L-O-F Glass Fibers Co. v. Watson, Comr.Pats., 228 F.2d 40, 107 USPQ 197 (Ct. App. D.C. 1955) | 9 |
| Lyon v. Bausch & Lomb Optical Co., 224 F.2d 530, 106 USPQ 1 (2 Cir. 1955), cert.den. 350 U.S. 911 | 5, 9 |

CASES — Page

Marvel Specialty Co., Inc. v. Bell Hosiery Mills, Inc., 330 F.2d 164, 141 USPQ 269 (4 Cir. 1964), cert.den. 13 L.Ed.2d 175 (No. 396, Nov. 9, 1964) ..... 8

Plax Corp. v. Precision Extruders, Inc., 239 F.2d 792, 112 USPQ 150 (3 Cir. 1957) ..... 7

Reiner v. I. Leon Co., Inc., 285 F.2d 501, 128 USPQ 25 (2 Cir. 1960), cert.den. 366 U.S. 929 6

R. M. Palmer Co. v. Luden's Inc., 236 F.2d 496, 111 USPQ 1 (3 Cir. 1956) ..... 7

FEDERAL CONSTITUTION AND STATUTES

United States Constitution, art. I, sec. 8, cl. 8 ..... 9

Patent Act of July 19, 1952, c. 950, §1, 66 Stat. 798, 35 U.S.C. §103 (1958) ..... 2, 3, 9

MISCELLANEOUS

2 U. S. Code Cong. & Ad. News, 82nd Congress, Second Session, 1952, at p. 2513 ..... 4

IN THE

# Supreme Court of the United States

October Term, 1964

---

No. 580

---

WILLIAM T. GRAHAM, and GRAHAM PLOW, INC.,
*Petitioners,*
v.
JOHN DEERE COMPANY OF KANSAS CITY, and
DEERE & COMPANY, *Respondents*

---

**Amicus Curiae Brief Of The**
**Patent, Trade-Mark And Copyright Section**
**Of The State Bar Of Texas**
**(With The Consent Of The Board Of Directors**
**Of The State Bar Of Texas)**

---

## I.

## PRELIMINARY STATEMENT

The written consent of all parties to this case to the filing of this brief has been obtained and filed with the Clerk.

In this case the District Court found the patent valid and infringed. The Eighth Circuit Court of Appeals reversed, holding that since the District Court failed to apply the proper legal test of invention, its finding of patentability was induced by an erroneous view of the law. The decision of the Eighth Circuit Court of Appeals was based upon the test announced by this Court in *Cuno Engineering Corp. v. Automatic Devices Corp.*, 314 U.S. 84, 62 S.Ct. 37, 86 L.Ed. 58 (1941).

It is the purpose of this amicus curiae brief to present for this Court's consideration information with respect to the legislative history of §103 of the Patent Codification Act (Title 35, U.S.C.) and subsequent opinions of the courts which, we believe, establish that the "flash of creative genius" test of the *Cuno* case of 1941 was eliminated by the second sentence of §103 of the Patent Codification Act of 1952. 66 Stat. 798, 35 U.S.C. §103 (1958).

## II.

## ARGUMENT

### Summary of Argument

The legislative intent of the Congress to eliminate the "flash of creative genius" test announced in the *Cuno* case is clearly established by the second sentence of §103, the legislative history thereof and subsequent opinions of the courts.

## Point A

**The legislative history of the second sentence of §103 clearly reveals the legislative intent to eliminate the "flash of creative genius" test of the Cuno case.**

Obviously, the legislative intent was to effect a substantive change in the law by excluding the test in the second sentence.

Section 103 is as follows:

> "A patent may not be obtained though the invention is not identically disclosed or described as set forth in Section 102 of this title, if the differences between the subject matter sought to be patented and the prior art are such that the subject matter as a whole would have been obvious at the time the invention was made to a person having ordinary skill in the art to which said subject matter pertains. *Patentability shall not be negatived by the manner in which the invention was made.*" (Emphasis ours.)

The House and Senate Reports, including the Reviser's Note forming a part thereof, are the same. *In the Reviser's Note the first and second sentences of §103 are distinguished as follows:* (35 U.S.C. §103 [1958]).

> "There is no provision corresponding to the first sentence explicitly stated in the present statutes, but the refusal of patents by the Patent Office, and the holding of patents invalid by the Courts, on the ground of lack of invention or lack of patentable novelty has been followed since at least as early as 1850. This paragraph is added with the view that an explicit statement in the statute may have some stabilizing effect,

and also to serve as a basis for the addition at a later time of some criteria which may be worked out."

*"The second sentence states that patentability as to this requirement is not to be negatived by the manner in which the invention was made, that is, it is immaterial whether it resulted from long toil and experimentation or from a flash of genius."* (Emphasis ours.)

In the commentary by Mr. Charles J. Zinn, the House Committee's law revision counsel, the following statement is made: (2 U.S. Code Cong. & Ad. News, 82nd Congress, Second Session, 1952, at p. 2513).

"Section 103 is a restatement of the rule invalidating patents for lack of invention or lack of patentable novelty which has long been recognized by the Courts and other authorities but has not before been spelled out in the statute.

*"The second sentence of this section providing that patentability shall not be negatived by the manner in which the invention was made eliminates the 'flash of genius' concept that has been considered as an essential element of patentability since the Cuno case. In that case (Cuno Engineering Corp. v. Automatic Devices Corp.,* 314 U.S. 84, 62 S.Ct. 37, 86 L.Ed. 58) *the Supreme Court held that 'the new device, however useful it may be, must reveal the flash of creative genius, not merely the skill of the calling'. The patentability of an invention resulting from arduous experimentation will not be negatived solely because it does not meet that concept."* (Emphasis ours.)

It thus appears that §103 should be construed to mean that if the differences between the patented subject matter and the prior art are such that the subject matter would not have been obvious to one skilled in the art at the time

the alleged invention was made, the patent is valid, and it is not necessary that the patented invention be the result of a "flash of creative genius."

**Point B**

**Point A above is supported by the opinions of many Courts.**

In *Lyon v. Bausch & Lomb Optical Co.*, 224 F.2d 530, 106 U.S.P.Q. 1 (2 Cir. 1955), cert. den. 350 U.S. 911, Judge Learned Hand said (page 535 of 224 F.2d):

> "The Courts of Appeal have very generally found in the recent opinions of the Supreme Court a disposition to insist upon a stricter test of invention than it used to apply * * *"

and, with reference to the *Cuno* case (page 536 of 224 F.2d):

> "* * * which in expression probably was the furtherest departure * * *."

In *E. J. Brooks Co. v. Stoffel Seals Corp.*, 266 F.2d 841, 121 U.S.P.Q. 333 (2 Cir. 1959), cert. den. 361 U.S. 883, Judge Lumbard in his dissenting opinion said (page 846 of 266 F.2d):

> "The establishment of a more liberal standard than the 'flash of creative genius' doctrine enunciated in the Cuno case was apparently one of the principal reasons why Congress passed the 1952 Patent Act, 35 U.S.C. §101 ff., especially §103. See e.g. Reviser's Note to §103, 2d Para.; Note, 44 Georgetown L.J. 100 (1955); Harris, Some Aspects of Legislative Intent of the Patent Act of 1952, 23 Geo. Wash. L.Rev. 658, 676 ff.

(1955). We so held in Lyon v. Bausch & Lomb Optical Co., supra, where the Cuno decision was cited as 'the furthest departure' (224 F.2d 536) from the test of Hotchkiss v. Greenwood, 1851, 11 How. 248, 267, 13 L.Ed. 683, to which the 1952 enactment was held to have returned devoid of intervening glosses." * * *

"Thus we have recognized that the 1952 Patent Act has overruled Picard v. United Aircraft Corp., 2 Cir., 1942, 128 F.2d 632, and that Congress has made it clear that what was said in Cuno Engineering Corp. v. Automatic Devices Corp., 1941, 314 U.S. 84, 91, 62 S.Ct. 37, 87 L.Ed. 58, about a 'flash of creative genius' was not a proper test of invention."

And (pages 846-47 of 266 F.2d):

"In my view the citation of the Cuno case in Judge Clark's footnotes is apt to be misleading as the implications of its 'flash of creative genius' phrase, whether dictum or not, has been repudiated by the paramount authority of the Congress. Other circuits which have expressly adopted the analysis of Lyon v. Bausch & Lomb Optical Co., supra, are the District of Columbia, L-O-F Glass Fibers Co. v. Watson, 1955, 97 U.S. App. D.C. 69, 228 F.2d 40, 47 and note 14; Third Circuit, R. M. Palmer v. Luden's, Inc., 1956, 236 F.2d 496, 500; Fourth Circuit, Brown v. Brock, 1957, 240 F.2d 723. Only the First Circuit appears to have considered and rejected it. See, e.g., Hawley Products Co. v. United States Trunk, 1958, 259 F.2d 69."

In *Reiner v. I. Leon Co., Inc.*, 285 F.2d 501, 128 U.S.P.Q. 25 (2 Cir. 1960), cert. den. 366 U.S. 929, Judge Hand said (page 503 of 285 F.2d):

"There can be no doubt that the Act of 1952 meant to change the slow but steady drift of judicial de-

> cision that had been hostile to patents which made it possible for Mr. Justice Jackson in dissent to speak of the 'strong passion in this Court for striking them' (patents) 'down so that the only patent that is valid is one which this Court has not been able to get its hands on.' Jungerson v. Ostby & Barton Co., 335 U.S. 560, 572, 69 S.Ct. 269, 274, 93 L.Ed. 235. That was in 1945, while the test laid down in Hotchkiss v. Greenwood, 11 How. 248, 266, 13 L.Ed. 683, still had a nominal authority, of which little remained in actual application. We still cannot escape the conclusion—as we could not when Lyon v. Bausch & Lomb, supra, was decided in 1955—that Congress deliberately meant to restore the old definition, and to raise it from a judicial gloss to a statutory command."

In *R. M. Palmer Co. v. Luden's Inc.*, 236 F.2d 496, 111 U.S.P.Q. 1, (3 Cir. 1956), the Court *sitting en banc* said in an opinion by Judge Kalodner (page 499 of 236 F.2d):

> "The provisions of Section 103, 35 U.S.C., 1952 Ed., as set forth in footnote 3, are new. The purpose of the provisions as stated by the Reviser is to achieve a stabilizing effect, and to render immaterial whether the invention resulted from 'flash of genius'."

and (page 500 of 236 F.2d):

> "There is no longer any doubt that the 'flash of genius' has been laid to rest."

In *Plax Corp. v. Precision Extruders, Inc.*, 239 F.2d 792, 112 U.S.P.Q. 150 (3 Cir. 1957), Judge Biggs said at page 794:

"We enunciated our interpretation of section 103 in R. M. Palmer Co. v. Luden's, Inc., 3 Cir. 1956, 236 F.2d 496, and of recent date in Newburgh Moire Co., Inc. v. Superior Moire Co., Inc., 3 Cir., 1956, 237 F.2d 283. We need not repeat in detail here what was said there. It is not necessary that an invention result from a 'flash of genius.' We think that Ferngren's work involved 'more ingenuity * * * than the work of a mechanic skilled in the art'."

In *Marvel Specialty Co., Inc. v. Bell Hosiery Mills, Inc.*, 330 F.2d 164, 141 U.S.P.Q. 269, (4 Cir. 1964), cert. den. 13 L.Ed.2d 175 (No. 396, Nov. 9, 1964), Judge Boreman said (page 169 of 330 F.2d):

"The extent to which the enactment of section 103 of the statute altered prior law is not altogether clear. See Berry Brothers Corporation v. Sigman, 317 F.2d 700, 704, (4 Cir. 1963); Triumph Hosiery Mills, Inc. v. Alamance Industries, Inc., 299 F.2d 793, 800, (4 Cir.) cert. denied, 370 U.S. 924, 82 S.Ct. 1566, 8 L.Ed.2d 504 (1962). It is apparent, however, that something less than a 'flash of genius' or 'inventive genius' may fulfill the mandate of the statute. Berry Brothers Corporation v. Sigmon, supra; Reiner v. I. Leon Co., 285 F.2d 501, (2 Cir. 1960) (L. Hand), cert. denied, 366 U.S. 929, 81 S.Ct. 1649, 6 L.Ed.2d 388 (1961). A number of cases, both before and after enactment of the statute, have undertaken to comprehensively set forth the standard of invention to be used as a test for determining patent validity. When the mass of verbiage has been distilled, however, we have little more to giude us than the test which is incorporated in section 103, that is, whether, in view of the prior art, the subject matter of the patent would have been obvious at the time of the invention to a person having ordinary skill in the art."

In *L-O-F Glass Fibers Co. v. Watson, Comr. Pats.*, 228 F.2d 40, 107 U.S.P.Q. 197 (1955), the Court of Appeals for the District of Columbia cited with approval Judge Learned Hand's opinion in *Lyon v. Bausch & Lomb Optical Co.*, 224 F.2d 530, 535-36, 106 U.S.P.Q. 1, 6-7 (2d Cir. 1955).

### Point C

**The elimination of the "flash of creative genius" test by §103 is in the public interest.**

The basic constitutional purpose of our patent system is "to promote the progress of science and useful arts". (Constitution Article I, Section 8, Clause 8) The military power and industrial prosperity of our nation are built upon substantial advances in science and useful arts. Therefore, the public interest requires that inventors be encouraged to make substantial advances.

To tell the inventors of our nation that they must have a "flash of creative genius" to obtain a patent, even though they make a substantial advance in the art, is to discourage invention and thereby discourage the progress of science and useful arts. So the Congress acted in the public interest when it enacted §103 to eliminate the "flash of creative genius" test.

## III.

## CONCLUSION

It is therefore respectfully suggested that this case presents a need for a decision by this Court that the "flash

of creative genius" test of the *Cuno* case has been eliminated by §103 of the Patent Codification Act.

Respectfully submitted,

J. VINCENT MARTIN
ALFRED H. EVANS

*Counsel for the Patent, Trade-mark and Copyright Section of the State Bar of Texas as Amicus Curiae*

*Of Counsel:*

RUSSELL E. SCHLORFF
Houston, Texas

## CERTIFICATE OF SERVICE

The undersigned hereby certifies that copies of the foregoing AMICUS CURIAE BRIEF OF THE PATENT, TRADE-MARK AND COPYRIGHT SECTION OF THE STATE BAR OF TEXAS (WITH THE CONSENT OF THE BOARD OF DIRECTORS OF THE STATE BAR OF TEXAS) were served in accordance with Rule 33 by mailing such copies, air mail postage prepaid, to Claude A. Fishburn, Esq., and Orville O. Gold, Esq., counsel for petitioner, at Suite 1217 Commerce Trust Building, Kansas City, Missouri, and to S. Tom Morris, Esq., counsel for respondent, at Suite 630 Amarillo Building, Amarillo, Texas; this _____ day of _____, 1965.

_____

J. Vincent Martin

# OPINION

# SUPREME COURT OF THE UNITED STATES

Nos. 11, 37 AND 43.—OCTOBER TERM, 1965.

| | |
|---|---|
| William T. Graham et al., Petitioners, v. John Deere Company of Kansas City et al. (11) | On Writs of Certiorari to the United States Court of Appeals for the Eighth Circuit. |
| Calmar, Inc., Petitioner, v. Cook Chemical Company. (37) | |
| Colgate-Palmolive Company, Petitioner, v. Cook Chemical Company. (43) | |

[February 21, 1966.]

MR. JUSTICE CLARK delivered the opinion of the Court.

After a lapse of 15 years, the Court again focuses its attention on the patentability of inventions under the standard of Art. I, § 8, cl. 8, of the Constitution and under the conditions prescribed by the laws of the United States. Since our last expression on patent validity, *A. & P. Tea Co.* v. *Supermarket Corp.*, 340 U. S. 147 (1950), the Congress has for the first time expressly added a third statutory dimension to the two requirements of novelty and utility that had been the sole statutory test since the Patent Act of 1793. This is the test of obviousness, *i. e.*, "whether the subject matter sought to be patented and the prior art are such that the subject matter as a whole would have been obvious at the time the invention was made to a person having ordinary skill in the art to which said subject matter pertains. Patentability shall not be negatived by the

manner in which the invention was made." Patent Act of 1952, 66 Stat. 798, 35 U. S. C. § 103 (1964 ed.).

The questions, involved in each of the companion cases before us, are what effect did the 1952 Act have upon traditional statutory and judicial tests of patentability and what definitive tests are now required. We have concluded that the 1952 Act was intended to codify judicial precedents embracing the principle long ago announced by this Court in *Hotchkiss* v. *Greenwood,* 11 How. 248 (1850), and that, while the clear language of § 103 places emphasis on an inquiry into obviousness, the general level of innovation necessary to sustain patentability remains the same.

I.

*The Cases.*

(a). No. 11, *Graham* v. *John Deere Co.,* an infringement suit by petitioners, presents a conflict between two Circuits over the validity of a single patent on a "Clamp for vibrating Shank Plows." The invention, a combination of old mechanical elements, involves a device designed to absorb shock from plow shanks as they plow through rocky soil and thus to prevent damage to the plow. In 1955, the Fifth Circuit had held the patent valid under its rule that when a combination produces an "old result in a cheaper and otherwise more advantageous way," it is patentable. *Jeoffroy Mfg., Inc.* v. *Graham,* 219 F. 2d 511, cert. denied, 350 U. S. 826. In 1964, the Eighth Circuit held, in the case at bar, that there was no new result in the patented combination and that the patent was, therefore, not valid. 333 F. 2d 529, reversing 216 F. Supp. 272. We granted certiorari, 379 U. S. 956. Although we have determined that neither Circuit applied the correct test, we conclude that the patent is invalid under § 103 and, therefore, we affirm the judgment of the Eighth Circuit.

(b). No. 37, *Calmar, Inc.* v. *Cook Chemical Co.*, and No. 43, *Colgate-Palmolive Co.* v. *Cook Chemical Co.*, both from the Eighth Circuit, were separate declaratory judgment actions, but were filed contemporaneously. Petitioner in *Calmar* is the manufacturer of a finger-operated sprayer with a "hold-down" cap of the type commonly seen on grocer's shelves inserted in bottles of insecticides and other liquids prior to shipment. Petitioner in *Colgate-Palmolive* is a purchaser of the sprayers and uses them in the distribution of its products. Each action sought a declaration of invalidity and noninfringement of a patent on similar sprayers isued to Cook Chemical as assignee of Baxter I. Scoggin, Jr., the inventor. By cross-action, Cook Chemical claimed infringement. The actions were consolidated for trial and the patent was sustained by the District Court. 220 F. Supp. 414. The Court of Appeals affirmed, 336 F. 2d 110, and we granted certiorari, 380 U. S. 949. We reverse.

Manifestly, the validity of each of these patents turns on the facts. The basic problems, however, are the same in each case and require initially a discussion of the constitutional and statutory provisions covering the patentability of the inventions.

## II.

At the outset it must be remembered that the federal patent power stems from a specific constitutional provision which authorizes the Congress "To promote the Progress of . . . useful Arts, by securing for limited Times to . . . Inventors the exclusive Right to their . . . Discoveries . . . ." Art. I, § 8.[1] The clause is both a grant of power and a limitation. This qualified author-

[1] The provision appears in the Constitution spliced together with the copyright provision, which we omit as not relevant here. See H. R. Rep. No. 1923, 82d Cong., 2d Sess., at 4 (1952); DeWolf, An Outline of Copyright Law, p. 15 (Boston, 1925).

ity, unlike the power often exercised in the Sixteenth and Seventeenth Centuries by the English Crown, is limited to the promotion of advances in the "useful arts." It was written against the backdrop of the practices—eventually curtailed by the Statute of Monopolies—of the Crown in granting monopolies to court favorites in goods or businesses which had long before been enjoyed by the public. See Meinhardt, Inventions, Patents and Monopoly, pp. 30–35 (London, 1946). The Congress in the exercise of the patent power may not overreach the restraints imposed by the stated constitutional purpose. Nor may it enlarge the patent monopoly without regard to the innovation, advancement or social benefit gained thereby. Moreover, Congress may not authorize the issuance of patents whose effects are to remove existent knowledge from the public domain, or to restrict free access to materials already available. Innovation, advancement, and things which add to the sum of useful knowledge are inherent requisites in a patent system which by constitutional command must "promote the Progress of . . . useful Arts." This is the *standard* expressed in the Constitution and it may not be ignored. And it is in this light that patent "validity requires reference to a standard written into the Constitution." *A. & P. Tea Co.* v. *Supermarket Corp., supra,* at 154.

Within the limits of the constitutional grant, the Congress may, of course, implement the stated purpose of the Framers by selecting the policy which in its judgment best effectuates the constitutional aim. This is but a corollary to the grant to Congress of any Article I power. *Gibbons* v. *Ogden,* 9 Wheat. 1. Within the scope established by the Constitution, Congress may set out conditions and tests for patentability. *McClurg* v. *Kingsland,* 1 How. 202, 206. It is the duty of the Commissioner of Patents and of the courts in the administration of the

patent system to give effect to the constitutional standard by appropriate application, in each case, of the statutory scheme of the Congress.

Congress quickly responded to the bidding of the Constitution by enacting the Patent Act of 1790 during the second session of the First Congress. It created an agency in the Department of State headed by the Secretary of State, the Secretary of the Department of War and the Attorney General, any two of whom could issue a patent for a period not exceeding 14 years to any petitioner that "hath invented or discovered any useful art, manufacture, or device, or any improvement therein not before known or used" if the Board found that "the invention or discovery [was] sufficiently useful and important . . . ." This group, whose members administered the patent system along with their other public duties, was known by its own designation as "Commissioners for the Production of the Useful Arts."

Thomas Jefferson, who as Secretary of State was a member of the group, was its moving spirit and might well be called the "First Administrator of our Patent System." See Federico, Operation of the Patent Act of 1790, 18 J. P. O. S. 237, 238 (1936). He was not only an administrator of the patent system under the 1790 Act, but was also the author of the 1793 Patent Act. In addition, Jefferson was himself an inventor of great note. His unpatented improvements on plows, to mention but one of his inventions, won acclaim and recognition on both sides of the Atlantic. Because of his active interest and influence in the early development of the patent system, Jefferson's views on the general nature of the limited patent monopoly under the Constitution, as well as his conclusions as to conditions for patentability under the statutory scheme, are worthy of note.

Jefferson, like other Americans, had an instinctive aversion to monopolies. It was a monopoly on tea that

sparked the Revolution and Jefferson certainly did not favor an equivalent form of monopoly under the new government. His abhorrence of monopoly extended initially to patents as well. From France, he wrote to Madison urging a bill of rights provision restricting monopoly, and as against the argument that limited monopoly might serve to incite "ingenuity," he argued forcefully that "the benefit of even limited monopolies is too doubtful to be opposed to that of their general suppression," IV Writings of Thomas Jefferson (Ford ed.), at 476 (July 1788).

His views ripened, however, and in another letter to Madison after the adoption of the Bill of Rights, Jefferson stated that he would have been pleased by an express provision in this form:

> "Article 9. Monopolies may be allowed to persons for their own productions in literature, and their own inventions in the Arts, for a term not exceeding — years, but for no longer term and for no other purpose." *Id.*, at 493 (Aug. 1789).

And he later wrote:

> "Certainly an inventor ought to be allowed a right to the benefit of his invention for some certain time . . . . Nobody wishes more than I do that ingenuity should receive liberal encouragement." Letter to Oliver Evans, V Writings of Thomas Jefferson, (Washington ed.), at 75 (1807).

Jefferson's philosophy on the nature and purpose of the patent monopoly is expressed in a letter to Isaac McPherson, a portion of which we set out in the margin.[2]

---

[2] "Stable ownership is the gift of social law, and is given late in the progress of society. It would be curious, then, if an idea, the fugitive fermentation of an individual brain, could, of natural right, be claimed in exclusive and stable property. If nature has made any one thing less susceptible than all others of exclusive property, it is the

He rejected a natural rights theory in intellectual property rights and clearly recognized the social and economic rationale of the patent system. The patent monopoly was not designed to secure to the inventor his natural right in his discoveries. Rather, it was a reward, an inducement, to bring forth new knowledge. The grant of an exclusive right to an invention was the creation of society—at odds with the inherent free nature of disclosed ideas—and was not to be freely given. Only inventions and discoveries which furthered human knowledge, and were new and useful, justified the special inducement of a limited private monopoly. Jefferson did not believe in granting patents for small details, obvious improvements, or frivolous devices. His writings evidence his insistence upon a high level of patentability.

As a member of the patent board for several years, Jefferson saw clearly the difficulty in "drawing a line be-

---

action of the thinking power called an idea, which an individual may exclusively possess as long as he keeps it to himself; but the moment it is divulged, it forces itself into the possession of every one, and the receiver cannot dispossess himself of it. Its peculiar character, too, is that no one possesses the less, because every other possesses the whole of it. He who receives an idea from me, receives instruction himself without lessening mine; as he who lights his taper at mine, receives light without darkening mine. That ideas should freely spread from one to another over the globe, for the moral and mutual instruction of man, and improvement of his condition, seems to have been peculiarly and benevolently designed by nature. When she made them like fire, expansible over all space, without lessening their density in any point, and like the air in which we breathe, move, and have our physical being, incapable of confinement or exclusive appropriation. Inventions then cannot, in nature, be a subject of property. Society may give an exclusive right to the profits arising from them, as an encouragement to men to pursue ideas which may produce utility, but this may or may not be done according to the will and convenience of the society, without claim or complaint from anybody." VI Writings of Thomas Jefferson (Washington ed.), at 180 (1814).

tween things which are worth to the public the embarrassment of an exclusive patent and those which are not." The board on which he served sought to draw such a line and formulated several rules which are preserved in Jefferson's correspondence.[5] Despite the Board's efforts, Jefferson saw "with what slow progress a system of general rules could be matured." Because of the "abundance" of cases and the fact that the investigations occupied "more time of the members of the board than they could spare from their higher duties, the whole was turned over to the judiciary, to be matured into a system, under which everyone might know when his actions were safe and lawful." Letter to McPherson, *supra*, at 181. Apparently Congress agreed with Jefferson and the Board that the courts should develop additional conditions for patentability. Although the Patent Act was amended, revised or codified some 50 times between 1790 and 1950, Congress steered clear of a statutory set of requirements other than the bare novelty and utility tests reformulated in Jefferson's draft of the 1793 Patent Act.

## III.

The difficulty of formulating conditions for patentability was heightened by the generality of the constitutional grant and the statutes implementing it, together

---

[5] "A machine of which we are possessed might be applied by every man to any use of which it is susceptible." Letter to Isaac McPherson, *supra*, at 181.

"A change of material should not give title to a patent. As the making a plowshare of cast rather than of wrought iron; a comb of iron instead of horn or ivory . . . ." *Ibid.*

"A mere change of form should give no right to a patent, as a high quartered shoe instead of a low one; a round hat instead of a three square, or a square bucket instead of a round one." *Id.*, at 182.

"[A combined use of old implements] A man has the right to use a saw, an axe, a plane separately; may he not combine their uses on the same piece of wood?" Letter to Oliver Evans, *supra*, at 298.

with the underlying policy of the patent system that "the things which are worth to the public the embarrassment of an exclusive patent," as Jefferson put it, must outweigh the restrictive effect of the limited patent monopoly. The inherent problem was to develop some means of weeding out those inventions which would not be disclosed or devised but for the inducement of a patent.

This Court formulated a general condition of patentability in 1850 in *Hotchkiss* v. *Greenwood*, 11 How. 248. The patent involved a mere substitution of materials—porcelain or clay for wood or metal in door knobs—and the Court condemned it, holding:[4]

> "[U]nless more ingenuity and skill . . . were required than were possessed by an ordinary mechanic acquainted with the business, there was an absence of that degree of skill and ingenuity which constitute essential elements of every invention. In other words, the improvement is the work of a skilled mechanic, not that of the inventor." At p. 267.

*Hotchkiss*, by positing the condition that a patentable invention evidence more ingenuity and skill than that possessed by an ordinary mechanic acquainted with the business, merely distinguished between new and useful innovations that were capable of sustaining a patent and those that were not. The *Hotchkiss* test laid the cornerstone of the judicial evolution suggested by Jefferson and left to the courts by Congress. The language in the case, and in those which followed, gave birth to "invention" as a word of legal art signifying patentable inventions. Yet, as this Court has observed, "[t]he truth is the word ['invention'] cannot be defined in such a manner as to afford any substantial aid in determining whether a par-

[4] In historical retrospect, the specific result in *Hotchkiss* flows directly from an application of one of the rules of the original board of "Commissioners," n. 3, second rule, *supra*.

ticular device involves an exercise of inventive faculty or not." *McClain* v. *Ortmayer*, 141 U. S. 419, 427 (1891), *A. & P. Tea Co.* v. *Supermarket Corp.*, 340 U. S., at 151. Its use as a label brought about a large variety of opinions as to its meaning both in the Patent Office, in the courts, and at the bar. The *Hotchkiss* formulation, however, lies not in any label, but in its functional approach to questions of patentability. In practice, *Hotchkiss* has required a comparison between the subject matter of the patent, or patent application, and the background skill of the calling. It has been from this comparison that patentability was in each case determined.

*The 1952 Act.*

IV.

The Act sets out the conditions of patentability in three sections. An analysis of the structure of these three sections indicates that patentability is dependent upon three explicit conditions: novelty and utility as articulated and defined in § 101, and § 102, and nonobviousness, the new statutory formulation, as set out in § 103. The first two sections, which trace closely the 1874 codification, express the "new and useful" tests which have always existed in the statutory scheme and, for our purposes here, need no clarification.[5] The pivotal

[5] "§ 101. *Inventions patentable*

"Whoever invents or discovers any new and useful process, machine, manufacture, or composition of matter, or any new and useful improvement thereof, may obtain a patent therefor, subject to the conditions and requirements of this title."

"§ 102. *Conditions for patentability; novelty and loss of right to patent*

"A person shall be entitled to a patent unless—

"(a) The invention was known or used by others in this country, or patented or described in a printed publication in this or a foreign country, before the invention thereof by the applicant for patent, or

"(b) the invention was patented or described in a printed publication in this or a foreign country or in public use or on sale in

section around which the present controversy centers is § 103. It provides:

> "§ 103. *Conditions for patentability; non-obvious subject matter*
>
> "A patent may not be obtained though the invention is not identically disclosed or described as set forth in section 102 of this title, if the differences between the subject matter sought to be patented and the prior art are such that the subject matter as a whole would have been obvious at the time the invention was made to a person having ordinary skill in the art to which said subject matter pertains. Patentability shall not be negatived by the manner in which the invention was made."

---

this country, more than one year prior to the date of the application for patent in the United States, or

"(c) he has abandoned the invention, or

"(d) the invention was first patented or caused to be patented by the applicant or his legal representatives or assigns in a foreign country prior to the date of the application for patent in this country on an application filed more than twelve months before the filing of the application in the United States, or

"(e) the invention was described in a patent granted on an application for patent by another filed in the United States before the invention thereof by the applicant for patent, or

"(f) he did not himself invent the subject matter sought to be patented, or

"(g) before the applicant's invention thereof the invention was made in this country by another who had not abandoned, suppressed, or concealed it. In determining priority of invention there shall be considered not only the respective dates of conception and reduction to practice of the invention, but also the reasonable diligence of one who was first to conceive and last to reduce to practice, from a time prior to conception by the other."

The precursors of these sections are to be found in Act of February 21, 1793, c. 11, 1 Stat. 318; Act of July 4, 1836, c. 357, 5 Stat. 117; Act of July 8, 1870, c. 230, 16 Stat. 198; Rev. Stat. (1874) § 4886.

The section is cast in relatively unambiguous terms. Patentability is to depend, in addition to novelty and utility, upon the "non-obvious" nature of the "subject matter sought to be patented" to a person having ordinary skill in the pertinent art.

The first sentence of this section is strongly reminiscent of the language in *Hotchkiss*. Both formulations place emphasis on the pertinent art existing at the time the invention was made and both are implicitly tied to advances in that art. The major distinction is that Congress has emphasized "non-obviousness" as the operative test of the section, rather than the less definite "invention" language of *Hotchkiss* that Congress thought had lead to "a large variety" of expressions in decisions and writings. In the title itself the Congress used the phrase "Conditions for patentability: *non-obvious subject matter,*" thus focusing upon "non-obviousness" rather than "invention."[6] The Senate and House Reports, S. Rep. No. 1979, 82d Cong., 2d Sess. (1952); H. R. Rep. No. 1923, 82d Cong., 2d Sess. (1952), reflect this emphasis in these terms:

> "Section 103, for the first time in our statute, provides a condition which exists in the law and has existed for more than 100 years, but only by reason of decision of the Courts. An invention which has been made, and which is new in the sense that the same thing has not been made before, may still not be patentable if the difference between the new thing and what was known before is not considered sufficiently great to warrant a patent. That has been expressed in a large variety of ways in decisions of

[6] The corresponding provision in the preliminary draft was titled "Conditions for Patentability; *lack of invention,*" Proposed Revision and Amendment of the Patent Laws, Preliminary Draft with Notes of House Committee on the Judiciary (Committee Print, 1950).

> the courts and in writings. Section 103 states this requirement in the title. It refers to the difference between the subject matter sought to be patented and the prior art, meaning what was known before as described in section 102. If this difference is such that the subject matter as a whole would have been obvious at the time to a person skilled in the art, then the subject matter cannot be patented.
>
> "That provision paraphrases language which has often been used in decisions of the courts, and the section is added to the statute for uniformity and definiteness. This section should have a stabilizing effect and minimize great departures which have appeared in some cases." H. R. Rep., at 7; S. Rep., at 6.

It is undisputed that this section was, for the first time, a statutory expression of an additional requirement for patentability, originally expressed in *Hotchkiss*. It also seems apparent that Congress intended by the last sentence of § 103 to abolish the test it believed this Court announced in the controversial phrase "flash of genius," used in *Cuno Corp.* v. *Automatic Devices Corp.*, 314 U. S. 84 (1941).[7]

---

[7] The sentence in which the phrase occurs reads: "The new device, however useful it may be, must reveal the flash of creative genius, not merely the skill of the calling." At p. 91. Although some writers and lower courts found in the language connotations as to the frame of mind of the inventors, none were so intended. The opinion approved *Hotchkiss* specifically, and the reference to "flash of creative genius" was but a rhetorical embellishment of language going back to 1833. Cf. "exercise of genius," *Shaw* v. *Cooper*, 7 Pet. 292; "inventive genius," *Rickendorfer* v. *Farber*, 92 U. S. 347 (1875); *Concrete Appliance Products Co.*; "flash of thought," *Densmore* v. *Scofield*, 102 U. S. 375 (1880); "intuitive genius," *C. A. Potts Co.* v. *Creager*, 155 U. S. 597 (1895). Rather than a more exacting standard, *Cuno* merely rhetorically restated the requirement that the subject matter sought to be patented must be beyond the skill of the calling. It was the device, not the inven-

It is contended, however, by some of the parties and by several of the *amici* that the first sentence of § 103 was intended to sweep away judicial precedents and to lower the level of patentability. Others contend that the Congress intended to codify the essential purpose reflected in existing judicial precedents—the rejection of insignificant variations and innovations of a commonplace sort—and also to focus inquiries under § 103 upon nonobviousness, rather than upon "invention," as a means of achieving more stability and predictability in determining patentability and validity.

The Reviser's Note to this section,[8] with apparent reference to *Hotchkiss*, recognizes that judicial requirements as to "lack of patentable novelty have been followed since at least as early as 1850." The note indicates that the section was inserted because it "may have some stabilizing effect and also serve as a basis for the addition at a later time of criteria which may be worked out." To this same effect are the reports of both Houses, *supra*, which state that the first sentence of the section "para-

---

tion, that had to reveal the "flash of creative genius." See Boyajian, The Flash of Creative Genius, 25 J. P. O. S. 776, 780, 781 (1943); *Pacific Contact Laboratories, Inc.* v. *Solex Laboratories, Inc.*, 209 F. 2d 529, 533; *Brown & Sharpe Mfg. Co.* v. *Kar Engineering Co.*, 154 F. 2d 48, 51–52; *In re Shortell*, 142 F. 2d 292, 295–296.

[8] "There is no provision corresponding to the first sentence explicitly stated in the present statutes, but the refusal of patents by the Patent Office, and the holding of patents invalid by the courts, on the ground of lack of invention or lack of patentable novelty has been followed since at least as early as 1850. This paragraph is added with the view that an explicit statement in the statute may have some stabilizing effect, and also to serve as a basis for the addition at a later time of some criteria which may be worked out.

"The second sentence states that patentability as to this requirement is not to be negatived by the manner in which the invention was made, that is, it is immaterial whether it resulted from long toil and experimentation or from a flash of genius."

phrases the language which has often been used in decisions of the courts and the section is added to the statute for uniformity and definitiveness."

We believe that this legislative history, as well as other sources,[9] show that the revision was not intended by Congress to change the general level of patentable invention. We conclude that the section was intended merely as a codification of judicial precedents embracing the *Hotchkiss* condition, with congressional directions that inquiries into the obviousness of the subject matter sought to be patented are a prerequisite to patentability.

## V.

Approached in this light, the § 103 additional condition, when followed realistically, will permit a more practical test of patentability. The emphasis on nonobviousness is one of inquiry, not quality and, as such, comports with the constitutional strictures.

While the ultimate question of patent validity is one of law, *A. & P. Tea Co.* v. *Supermarket Corp., supra,* at 155, the § 103 condition, which is but one of three conditions, each of which must be satisfied, lends itself to several basic factual inquiries. Under § 103, the scope and content of the prior art are to be determined; differences between the prior art and the claims at issue are to be ascertained; and the level of ordinary skill in the pertinent art resolved. Against this background, the obviousness or nonobviousness of the subject matter is determined. Such secondary considerations as commercial success, long felt but unsolved needs, failure of others, etc., might be utilized to give light to the circum-

[9] See Efforts to Establish a Statutory Standard of Invention, Study No. 7, Senate Subcommittee on Patents, Trademarks and Copyrights, 85th Cong., 2d Sess. (Committee Print, 1961); Hearings, Subcommittee No. 3, House Committee on the Judiciary, on H. R. 3760, 82d Cong., 1st Sess. (1951).

stances surrounding the origin of the subject matter sought to be patented. As indicia of obviousness or nonobviousness, these inquiries may have relevancy. See Note, Subtests of "Nonobviousness," 112 U. Pa. L. Rev. 1169 (1964).

This is not to say, however, that there will not be difficulties in applying the nonobviousness test. What is obvious is not a question upon which there is likely to be uniformity of thought in every given factual context. The difficulties, however, are comparable to those encountered daily by the courts in such frames of reference as negligence and scienter, and should be amenable to a case-by-case development. We believe that strict observance of the requirements laid down here will result in that uniformity and definitiveness which Congress called for in the 1952 Act.

While we have focused attention on the appropriate standard to be applied by the courts, it must be remembered that the primary responsibility for sifting out unpatentable material lies in the Patent Office. To await litigation is—for all practical purposes—to debilitate the patent system. We have observed a notorious difference between the standards applied by the Patent Office and by the courts. While many reasons can be adduced to explain the discrepancy, one may well be the free rein often exercised by Examiners in their use of the concept of "invention." In this coniection we note that the Patent Office is confronted with a most difficult task. Almost 100,000 applications for patents are filed each year. Of these, about 50,000 are granted with the result that the backlog now runs well over 200,000. United States Patent Office, Index of Patents, p. 1123 (1963). This is itself a compelling reason for the Commissioner to strictly adhere to the 1952 Act as interpreted here. This would, we believe, not only expedite

disposition but bring about a closer concurrence between administrative and judicial precedent.[10]

Although we conclude here that the inquiry which the Patent Office and the courts must make as to patentability must be beamed with greater intensity on the requirements of § 103, it bears repeating that we find no change in the general strictness with which the overall test is to be applied. We have been urged to find in § 103 a relaxed standard, supposedly a congressional reaction to the "increased standard" applied by this Court in its decisions over the last 20 or 30 years. The standard has remained invariable in this Court. Technology, however, has advanced—and with remarkable rapidity in the last 50 years. Moreover, the ambit of applicable art in given fields of science has widened by disciplines unheard of a half-century ago. It is but an evenhanded application to require those persons granted the benefit of a patent monopoly be charged with an awareness of these changed conditions. The same is true of the less technical, but still useful arts. He who seeks to build a better mousetrap today has a long path to tread before reaching the Patent Office.

VI.

We now turn to the application of the conditions found necessary for patentability to the cases involved here:

A. *The patent in issue in No. 11, Graham v. John Deere Co.*

This patent, No. 2,627,798 (hereinafter called the '798 patent) relates to a spring clamp which permits plow

[10] The President has appointed a Commission on the Patent System. Executive Order No. 11215, 30 Fed. Reg. 4661 (April 10, 1965). It is hoped that its studies may develop more efficient administrative procedures and techniques that will further expedite dispositions and at the same time insure the strict application of appropriate tests of patentability.

shanks to be pushed upward when they hit obstructions in the soil, and then springs the shanks back into normal position when the obstruction is passed over. The device, which we show diagrammatically in the accompanying sketches (Appendix, Fig. 1), is fixed to the plow frame as a unit. The mechanism around which the controversy centers is basically a hinge. The top half of it, known as the upper plate (marked 1 in the sketches), is a heavy metal piece clamped to the plow frame (2) and is stationary relative to the plow frame. The lower half of the hinge, known as the hinge plate (3), is connected to the rear of the upper plate by a hinge pin (4) and rotates downward with respect to it. The shank (5), which is bolted to the forward end of the hinge plate (at 6), runs beneath the plate and parallel to it for about nine inches, passes through a stirrup (7), and then continues backward for several feet curving down toward the ground. The chisel (8), which does the actual plowing, is attached to the rear end of the shank. As the plow frame is pulled forward, the chisel rips through the soil, thereby plowing it. In the normal position, the hinge plate and the shank are kept tight against the upper plate by a spring (9), which is atop the upper plate. A rod (10) runs through the center of the spring, extending down through holes in both plates and the shank. Its upper end is bolted to the top of the spring while its lower end is hooked against the underside of the shank.

When the chisel hits a rock or other obstruction in the soil, the obstruction forces the chisel and the rear portion of the shank to move upward. The shank is pivoted (at 11) against the rear of the hinge plate and pries open the hinge against the closing tendency of the spring. (See sketch labeled "Open Position," Appendix, Fig. 1.) This closing tendency is caused by the fact that, as the hinge is opened, the connecting rod is pulled down-

ward and the spring is compressed. When the obstruction is passed over, the upward force on the chisel disappears and the spring pulls the shank and hinge plate back into their original position. The lower, rear portion of the hinge plate is constructed in the form of a stirrup (6) which brackets the shank, passing around and beneath it. The shank fits loosely into the stirrup (permitting a slight up and down play). The stirrup is designed to prevent the shank from recoiling away from the hinge plate, and thus prevents excessive strain on the shank near its bolted connection. The stirrup also girds the shank, preventing it from fishtailing from side to side.

In practical use, a number of spring-hinge-shank combinations are clamped to a plow frame, forming a set of ground-working chisels capable of withstanding the shock of rocks and other obstructions in the soil without breaking the shanks.

*Background of the Patent.*

Chisel plows, as they are called, were developed for plowing in areas where the ground is relatively free from rocks or stones. Originally, the shanks were rigidly attached to the plow frames. When such plows were used in the rocky, glacial soils of some of the Northern States, they were found to have serious defects. As the chisels hit buried rocks, a vibratory motion was set up and tremendous forces were transmitted to the shank near its connection to the frame. The shanks would break. Graham, one of the petitioners, sought to meet that problem, and in 1950 obtained a patent, U. S. No. 2,493,811, on a spring clamp which solved some of the difficulties. Graham and his companies manufactured and sold the '811 clamps. In 1950, Graham modified the '811 structure and filed for a patent. That patent, the one in issue, was granted in 1953. This suit against competing plow manufacturers resulted from charges by petitioners that several of respondents' devices infringed the '798 patent.

*The Prior Art.*

Five prior patents indicating the state of the art were cited by the Patent Office in the prosecution of the '798 application. Four of these patents, 10 other United States patents and two prior use spring clamp arrangements not of record in the '798 file wrapper were relied upon by respondent as revealing the prior art. The District Court and the Court of Appeals found that the prior art "as a whole in one form or another contains all of the mechanical elements of the '798 Patent." One of the prior use clamp devices not before the Patent Examiner—Glencoe—was found to have "all of the elements."

We confine our discussion to the prior patent of Graham, '811, and to the Glencoe clamp device, both among the references asserted by respondents. The Graham '811 and '798 patent devices are similar in all elements, save two; (1) the stirrup and the bolted connection of the shank to the hinge plate do not appear in '811; and (2) the position of the shank is reversed, being placed in patent '811 above the hinge plate, sandwiched between it and the upper plate. The shank is held in place by the spring rod which is hooked against the bottom of the hinge plate passing through a slot in the shank. Other differences are of no consequence to our examination. In practice the '811 patent arrangement permitted the shank to wobble or fishtail because it was not rigidly fixed to the hinge plate; moreover, as the hinge plate was below the shank, the latter caused wear on the upper plate, a member difficult to repair or replace.

Graham's '798 patent application contained 12 claims. All were rejected as not distinguished from the Graham '811 patent. The inverted relationship of the shank was specifically rejected as was the bolting of the shank to the hinge plate. The Patent Office examiner found these to be "matters of design well within the expected skill of

the art and devoid of invention." Graham withdrew the original claims and substituted the two new ones which are substantially those in issue here. His contention was that wear was reduced in patent '798 between the shank and the heel or rear of the upper plate.[11] He also emphasized several new features, the relevant one here being that the bolt used to connect the hinge plate and shank maintained the upper face of the shank in continuing and constant contact with the underface of the hinge plate.

Graham did not urge before the Patent Office the greater "flexing" qualities of the '798 patent arrangement which he so heavily relied on in the courts. The sole element in patent '798 which petitioners argue before us is the interchanging of the shank and hinge plate and the consequences flowing from this arrangement. The contention is that this arrangement—which petitioners claim is not disclosed in the prior art—permits the shank to flex under stress for its *entire* length. As we have sketched (see sketch, "Graham '798 Patent" in Appendix, Fig. 2), when the chisel hits an obstruction the resultant force (A) pushes the rear of the shank upward and the shank pivots at the underface of the upper plate at its rear (C). The natural tendency is for that portion of the shank between the pivot point and the bolted connection (*i. e.*, between C and D) to bow downward and away from the hinge plate. The maximum

[11] In '811, where the shank was above the hinge plate, an upward movement of the chisel forced the shank up against the underside of the rear of the upper plate. The upper plate thus acted as the fulcrum about which the hinge was pried open. Because of this, as well as the location of the hinge pin, the shank rubbed against the heel of the upper plate causing wear both to the plate and to the shank. By relocating the hinge pin and by placing the hinge plate between the shank and the upper plate, as in 798, the rubbing was eliminated and the wear point was changed to the hinge plate, a member more easily removed or replaced for repair.

distance (B) that the shank moves away from the plate is slight—for emphasis, greatly exaggerated in the sketches. This is so because of the strength of the shank and the short—nine inches or so—length of that portion of the shank between (C) and (D). On the contrary, in patent '811 (see sketch, "Graham '811 Patent" in Appendix, Fig. 2), the pivot point is the upper plate at point (c); and while the tendency for the shank to bow between points (c) and (d) is the same as in '798, the shank is restricted because of the underlying hinge and cannot flex as freely. In practical effect, the shank flexes only between points (a) and (c), and not along the entire length of the shank, as in '798. Petitioners say that this difference in flex, though small, effectively absorbs the termendous forces of the shock of obstructions whereas prior art arrangements failed.

*The Obviousness of the Differences.*

We cannot agree with petitioners. We assume that the prior art does not disclose such an arrangement as petitioners claim in patent '798. Still we do not believe that the argument on which petitioners' contention is bottomed supports the validity of the patent. The tendency of the shank to flex is the same in all cases. If free-flexing, as petitioners now argue, is the crucial difference above the prior art, then it appears evident that the desired result would be obtainable by not boxing the shank within the confines of the hinge.[12] The only other effective place available in the arrangement was to attach it below the hinge plate and run it through a

[12] Even petitioners' expert testified to that effect:

"Q. Given the same length of the forward portion of the clamp . . . you would anticipate that the magnitude of flex [in 798] would be precisely the same or substantially the same as in 811, wouldn't you?

"A. I would think so."

stirrup or bracket that would not disturb its flexing qualities. Certainly a person having ordinary skill in the prior art, given the fact that the flex in the shank could be utilized more effectively if allowed to run the entire length of the shank, would immediately see that the thing to do was what Graham did, *i. e.*, invert the shank and the hinge plate.

Petitioners' argument basing validity on the free-flex theory raised for the first time on appeal is reminiscent of *Lincoln Engineering Co.* v. *Stewart-Warner Corp.*, 303 U. S. 845 (1938), where the Court called such an effort "an afterthought. No such function . . . is hinted at in the specifications of the patent. If this were so vital an element in the functioning of the apparatus it is strange that all mention of it was omitted." At p. 550. No "flexing" argument was raised in the Patent Office. Indeed, the trial judge specifically found that "flexing is not a claim of the patent in suit . . ." and would not permit interrogation as to flexing in the accused devices. Moreover, the clear testimony of petitioners' experts shows that the flexible advantages flowing from the '798 arrangement are not, in fact, a significant feature in the patent.[13]

We find no nonobvious facets in the '798 arrangement. The wear and repair claims were sufficient to overcome

---

[13] "Q. . . . Do you regard the small degree of flex in the forward end of the shank that lies between the pivot point and the point of spring attachment to be of any significance or any importance to the functioning of a device such as 798? A. Unless you are approaching the elastic limit, I think this flexing will reduce the maximum stress at the point of pivot there, where the maximum stress does occur. I think it will reduce that. I don't know how much.

"Q. Do you think it is a substantial factor, a factor of importance in the functioning of the structure? A. Not a great factor, no."

The same expert previously testified similarly in *Jeoffroy, supra.*

the patent examiner's original conclusions as to the validity of the patent. However, some of the prior art, notably Glencoe, was not before him. There the hinge plate is below the shank but, as the courts below found, all of the elements in the '798 patent are present in the Glencoe structure. Furthermore, even though the position of the shank and hinge plate appears reversed in Glencoe, the mechanical operation is identical. The shank there pivots about the underside of the stirrup, which in Glencoe is *above* the shank. In other words, the stirrup in Glencoe serves exactly the same function as the heel of the hinge plate in '798. The mere shifting of the wear point to the heel of the '798 hinge plate from the stirrup of Glencoe—itself a part of the hinge plate—presents no operative mechanical distinctions, much less nonobvious differences.

B. *The Patent in issue in No. 37, Calmar, Inc. v. Cook Chemical Co. and in No. 43, Colgate Palmolive Co. v. Cook Chemical Co.*

The single patent [14] involved in these cases relates to a plastic finger sprayer with a "hold down" lid used as a built-in dispenser for containers or bottles packaging liquid products, principally household insecticides. Only the first two of the four claims in the patent are involved here and we, therefore, limit our discussion to them. We do not set out those claims here since they are printed in 220 F. Supp., at pp. 417–418.

In essence the device here combines a finger-operated pump sprayer, mounted in a container or bottle by means of a container cap, with a plastic overcap which screws

[14] The patent is U. S. No. 2,870,943 issued in 1959 to Cook Chemical Co. as assignee of Burton I. Scoggin, Jr., the inventor. In No. 37, Calmar is the manufacturer of an alleged infringing device, and, in No. 43, Colgate is a purchaser of Calmar and user of its device.

over the top of and depresses the sprayer (see Figure 3 in the Appendix). The pump sprayer passes through the container cap and extends down into the liquid in the container; the overcap fits over the pump sprayer and screws down on the outside of a collar mounting or retainer which is molded around the body of the sprayer. When the overcap is screwed down on this collar mounting a seal is formed by the engagement of a circular ridge or rib located above the threads on the collar mounting with a mating shoulder located inside the overcap above its threads.[15] The overcap, as it is screwed down, depresses the pump plunger rendering the pump inoperable and when the seal is effected, any liquid which might seep into the overcap through or around the pump is prevented from leaking out of the overcap. The overcap serves also to protect the sprayer head and prevent damage to it during shipment or merchandising. When the overcap is in place it does not reach the cap of the container or bottle and in no way engages it since a slight space is left between those two pieces.

The device, called a shipper-sprayer in the industry, is sold as an integrated unit with the overcap in place enabling the insecticide manufacturer to install it on the container or bottle of liquid in a single operation in an automated bottling process. The ultimate consumer simply unscrews and discards the overcap, the pump plunger springs up and the sprayer is ready for use.

*The Background of the Patent.*

For many years manufacturers engaged in the insecticide business had faced a serious problem in developing sprayers that could be integrated with the containers or bottles in which the insecticides were marketed. Orig-

[15] Our discussion here relates to the overcap seal. The container itself is sealed in the customary way through the use of a container gasket located between the container and the container cap.

inally, insecticides were applied through the use of tin sprayers, not supplied by the manufacturer. In 1947, Cook Chemical, an insecticide manufacturer, began to furnish its customers with plastic pump dispensers purchased from Calmar. The dispenser was an unpatented finger-operated device mounted in a perforated cardboard holder and hung over the neck of the bottle or container. It was necessary for the ultimate consumer to remove the cap of the container and insert and attach the sprayer to the latter for use.

Hanging the sprayer on the side of the container or bottle was both expensive and troublesome. Packaging for shipment had to be a hand operation, and breakage and pilferage as well as the loss of the sprayer during shipment and retail display often occurred. Cook Chemical urged Calmar to develop an integrated sprayer that could be mounted directly in a container or bottle during the automated filling process and that would not leak during shipment or retail handling. Calmar did develop some such devices but for various reasons they were not completely successful. The situation was aggravated in 1954 by the entry of Colgate-Palmolive into the insecticide trade with its product marketed in aerosol spray cans. These containers, which used compressed gas as a propellent to dispense the liquid, did not require pump sprayers.

During the same year Calmar was acquired by the Drackett Company. Cook Chemical became apprehensive of its source of supply for pump sprayers and decided to manufacture its own through a subsidiary, Bakan Plastics, Inc. Initially, it copied its design from the unpatented Calmar sprayer, but an officer of Cook Chemical, Scoggin, was assigned to develop a more efficient device. By 1956 Scoggin had perfected the shipper-sprayer in suit and a patent was granted in 1959 to Cook Chemical as his assignee. In the interim Cook Chemical began to use Scoggin's device and it was also

marketed to the trade. The device was well received and soon became widely used.

In the meanwhile, Calmar employed two engineers, Corsette and Cooprider, to perfect a shipper-sprayer and by 1958 it began to market its SS–40, a device very much similar to Scoggin's. When the Scoggin patent issued, Cook Chemical charged Calmar's SS–40 with infringement and this suit followed.

*The Opinions of the District Court and the Court of Appeals.*

At the outset it is well to point up that the parties have always disagreed as to the scope and definition of the invention claimed in the patent in suit. Cook Chemical contends that the invention encompasses a unique combination of admittedly old elements and that patentability is found in the result produced. Its expert testified that the invention was "the first commercially successful, inexpensive, integrated shipping closure pump unit which permitted automated assembly with a container of household insecticide or similar liquids to produce a practical ready-to-use package which should be shipped without external leakage and which was so organized that the pump unit with its hold-down cap could be itself assembled and sealed and then later assembled and sealed on the container without breaking the first seal." Cook Chemical stresses the long-felt need in the industry for such a device; the inability of others to produce it; and its commercial success—all of which, contends Cook, evidences the nonobvious nature of the device at the time it was developed. On the other hand, Calmar says that the differences between Scoggin's shipper-sprayer and the prior art relate only to the design of the overcap and that the differences are so inconsequential that the device as a whole would have been obvious at the time of its invention to a person having ordinary skill in the art.

Both courts accepted Cook Chemical's contentions. While the exact basis of the District Court's holding is uncertain, it did find the subject matter of the patent new, useful and nonobvious. It concluded that Scoggin "had produced a sealed and protected sprayer unit which the manufacturer need only screw onto the top of its container much in the same fashion as a simple cap." 220 F. Supp., at 418. Its decision seems to be bottomed on the finding that the Scoggin sprayer solved the long-standing problem that had confronted the industry.[16] The Court of Appeals also found validity in the "novel 'marriage' of the sprayer with the insecticide container" which took years in discovery and in "the immediate commercial success" which it enjoyed. While finding that the individual elements of the invention were "not novel *per se*" the court found "nothing in the prior art suggesting Scoggin's unique combination of these old features as would solve the problem . . . which for years besat the insecticide industry." It concluded that "the . . . [device] . . . meets the exacting standard required for a combination of old elements to rise to the level of patentable invention by fulfilling the long-felt need with an economical, efficient, utilitarian apparatus which achieved novel results and immediate commercial success." 336 F. 2d, at 114.

*The Prior Art.*

Only two of the five prior art patents cited by the Patent Office Examiner in the prosecution of Scoggin's application are necessary to our discussion, *i. e.*, Lohse

[16] "By the same reasoning, may it not also be said that if [the device] solved a long-sought need, it was likewise novel? If it meets the requirements of being new, novel, and useful, it was the subject of invention, although it may have been a short step, nevertheless it was the last step that ended the journey. The last step is the one that wins and he who takes it when others could not, is entitled to patent protection." 220 F. Supp., at 421.

U. S. Patent No. 2,119,884 (1938) and Mellon U. S. Patent No. 2,586,687 (1952). Others are cited by Calmar that were not before the Examiner, but of these our purposes require discussion only of the Livingstone U. S. Patent No. 2,751,480 (1953). Simplified drawings of each of these patents are reproduced in the Appendix, Figs. 4–6, for comparison and description.

The Lohse patent (Fig. 4) is a shipper-sprayer designed to perform the same function as Scoggin's device. The differences, recognized by the District Court, are found in the overcap seal which in Lohse is formed by the skirt of the overcap engaging a washer or gasket which rests upon the upper surface of the container cap. The court emphasized that in Lohse "there are no seals above the threads and below the sprayer head." 220 F. Supp., at 419–420.

The Mellon patent (Fig. 5), however, discloses the idea of effecting a seal above the threads of the overcap. Mellon's device, likewise a shipper-sprayer, differs from Scoggin's in that its overcap screws directly on the container, and a gasket, rather than a rib, is used to effect the seal.

Finally, Livingstone (Fig. 6) shows a seal above the threads accomplished without the use of a gasket or washer.[17] Although Livingstone's arrangement was designed to cover and protect pouring spouts, his sealing feature is strikingly similar to Scoggin's. Livingstone uses a tongue and groove technique in which the tongue, located on the upper surface of the collar, fits into a groove on the inside of the overcap. Scoggin employed the rib and shoulder seal in the identical position and with less efficiency because the Livingstone technique

[17] While the sealing feature was not specifically claimed in the Livingstone patent, it was disclosed in the drawings and specifications. Under long-settled law the feature became public property. *Miller* v. *Brass Company*, 104 U. S. 350, 352 (1881).

is inherently a more stable structure, forming an interlock that withstands distortion of the overcap when subjected to rough handling. Indeed, Cook Chemical has now incorporated the Livingstone closure into its own shipper-sprayers as had Calmar in its SS–40.

*The Invalidity of the Patent.*

Let us first return to the fundamental disagreement between the parties. Cook Chemical, as we noted at the outset, urges that the invention must be viewed as the overall combination, or—putting it in the language of the statute—that we must consider the subject matter sought to be patented taken as a whole. With this position, taken in the abstract, there is, of course, no quibble. But the history of the prosecution of the Scoggin application in the Patent Office reveals a substantial divergence in respondent's present position.

As originally submitted, the Scoggin application contained 15 claims which in very broad terms claimed the entire combination of spray pump and overcap. No mention of, or claim for, the sealing features were made. All 15 claims were rejected by the Examiner because (1) the applicant was vague and indefinite as to what the invention was, and (2) the claims were met by Lohse. Scoggin canceled these claims and submitted new ones. Upon a further series of rejections and new submissions, the Patent Office Examiner, after an office interview, at last relented. It is crystal-clear that after the first rejection, Scoggin relied entirely upon the sealing arrangement as the exclusive patentable difference in his combination. It is likewise clear that it was on that feature that the Examiner allowed the claims. In fact, in a letter accompanying the final submission of claims, Scoggin, through his attorney, stated that "agreement was reached between the Honorable Examiner and applicant's attorney relative to *limitations* which must be in the claims in

order to define novelty over the previously applied disclosure of Lohse when considered in view of the newly cited patents of Mellon and Darley, Jr." (Italics added.)

Moreover, those limitations were specifically spelled out as (1) the use of a rib seal and (2) an overcap whose lower edge did not contact the container cap. Mellon was distinguished, as was the Darley patent, *infra*, n. 18, on the basis that although it disclosed a hold-down cap with a seal located above the threads, it did not disclose a rib seal disposed in such position as to cause the lower peripheral edge of the overcap "to be maintained out of contacting relationship with [the container] cap . . . when . . . [the overcap] was screwed [on] tightly . . . ." Scoggin maintained that the "obvious modification" of Lohse in view of Mellon would be merely to place the Lohse gasket above the threads with the lower edge of the overcap remaining in tight contact with the container cap or neck of the container itself. In other words, the Scoggin invention was limited to the use of a rib—rather than a washer or gasket—and the existence of a slight space between the overcap and the container cap.

It is, of course, well-settled that an invention is construed not only in the light of the claims, but also with reference to the file wrapper or prosecution history in the Patent Office. *Hogg* v. *Emerson*, 11 How. 587 (1850); *Crawford* v. *Heysinger*, 123 U. S. 589 (1887). Claims as allowed must be read and interpreted with reference to rejected ones and to the state of the prior art; and claims that have been narrowed in order to obtain the issuance of a patent by distinguishing the prior art cannot be sustained to cover that which was previously by limitation eliminated from the patent. *Powers-Kennedy Co.* v. *Concrete Co.*, 282 U. S. 175, 185–186 (1930); *Schriber Co.* v. *Cleveland Trust Co.*, 311 U. S. 211, 220–221 (1940).

Here, the patentee obtained his patent only by accepting the limitations imposed by the Examiner. The claims were carefully drafted to reflect these limitations and Cook Chemical is not now free to assert a broader view of Scoggin's invention. The subject matter as a whole reduces, then, to the distinguishing features clearly incorporated into the claims. We now turn to those features.

As to the space between the skirt of the overcap and the container cap, the District Court found:

> "Certainly without a space so described there could be no inner seal with the cap, but such a space is not new or novel, it is necessary to the formation of the seal within the hold-down cap.
>
> *"To me this language is descriptive of an element of the patent, but not a part of the invention.* It is too simple, really, to require much discussion. In this device the hold-down cap was intended to perform two functions—to hold down the sprayer head and to form a solid tight seal between the shoulder and the collar below. In assembling the element it is necessary to provide this space in order to form the seal." 220 F. Supp., at 420. (Italics added.)

The court correctly viewed the significance of that feature. We are at a loss to explain the Examiner's allowance on the basis of such a distinction. Scoggin was able to convince the Examiner that Mellon's cap contacted the bottle neck while his did not. Although the drawings included in the Mellon application show that the cap might touch the neck of the bottle when fully screwed down, there is nothing—absolutely nothing—which indicates that the cap was designed at any time to *engage* the bottle neck. It is palpably evident that Mellon embodies a seal formed by a gasket com-

pressed between the cap and the bottle neck. It follows that the cap in Mellon will not seal if it does not bear down on the gasket and this would be impractical, if not impossible, under the construction urged by Scoggin before the Examiner. Moreover, the space so strongly asserted by Cook Chemical appears quite plainly on the Livingstone device, a reference not cited by the Examiner.

The substitution of a rib built into a collar likewise presents no patentable difference above the prior art. It was fully disclosed and dedicated to the public in the Livingstone patent. Cook Chemical argues, however, that Livingstone is not in the *pertinent* prior art because it relates to liquid containers having pouring spouts rather than pump sprayers. Apart from the fact that respondent made no such objection to similar references cited by the Examiner,[18] so restricted a view of the applicable prior art is not justified. The problems confronting Scoggin and the insecticide industry were not insecticide problems; they were mechanical closure problems. Closure devices in such a closely related art as pouring spouts for liquid containers are at the very least pertinent references. See, II Walker, Patents § 260 (Deller ed. 1937).

Cook Chemical insists, however, that the development of a workable shipper-sprayer eluded Calmar, who had long and unsuccessfully sought to solve the problem. And, further, that the long-felt need in the industry for a device such as Scoggin's together with its wide commercial success supports its patentability. These legal in-

[18] In addition to Livingstone and Mellon, the Examiner cited Slade, U. S. Patent No. 2,844,290 (hold-down cap for detergent cans having a pouring spout); Nilson, U. S. Patent No. 2,118,222 (combined cap and spout for liquid dispensing containers); Darley, Jr., U. S. Patent No. 1,447,712 (containers for toothpaste, cold creams and other semi-liquid substances).

ferences or subtests do focus attention on economic and motivational rather than technical issues and are, therefore, more susceptible to judicial treatment than are the highly technical facts often present in patent litigation. See Learned Hand in *Reiner* v. *I. Leon Co.*, 285 F. 2d 501, 504 (1960). See also Comment, Subtests of "Nonobviousness," 112 Pa. L. Rev. 1169 (June 1964). Such inquiries may lend a helping hand to the judiciary which, as Mr. Justice Frankfurter observed, is most ill-fitted to discharge the technological duties cast upon it by patent legislation. *Marconi Wireless Co.* v. *United States*, 320 U. S. 1, 60 (1943). They may also serve to "guard against slipping into hindsight," *Monroe Auto Equipment Co.* v. *Superior Industries, Inc.*, 332 F. 2d 406, 412 (1964), and to resist the temptation to read into the prior art the teachings of the invention in issue.

However, these factors do not, in the circumstances of this case, tip the scales of patentability. The Scoggin invention, as limited by the Patent Office and accepted by Scoggin, rests upon exceedingly small and quite nontechnical mechanical differences in a device which was old in the art. At the latest, those differences were rendered apparent in 1953 by the appearance of the Livingstone patent, and unsuccessful attempts to reach a solution to the problems confronting Scoggin made before that time became wholly irrelevant. It is also irrelevant that no one apparently chose to avail themselves of knowledge stored in the Patent Office and readily available by the simple expedient of conducting a patent search—a prudent and nowdays common preliminary to well organized research. *Mast, Foos & Co.* v. *Stover Mfg. Co.*, 177 U. S. 485 (1900). To us, the limited claims of the Scoggin patent are clearly evident from the prior art as it stood at the time of the invention.

We conclude that the claims in issue in the Scoggin patent must fall as not meeting the test of § 103, since

the differences between them and the pertinent prior art would have been obvious to a person reasonably skilled in that art.

The judgment of the Court of Appeals in No. 11 is affirmed. The judgment of the Court of Appeals in Nos. 37 and 43 is reversed and the cases remanded to the District Court for disposition not inconsistent with this opinion.

*It is so ordered.*

MR. JUSTICE STEWART took no part in the consideration or decision of Nos. 37 and 43.

MR. JUSTICE FORTAS took no part in the consideration or decision of these cases.

Figure 1.—GRAHAM '798 PATENT

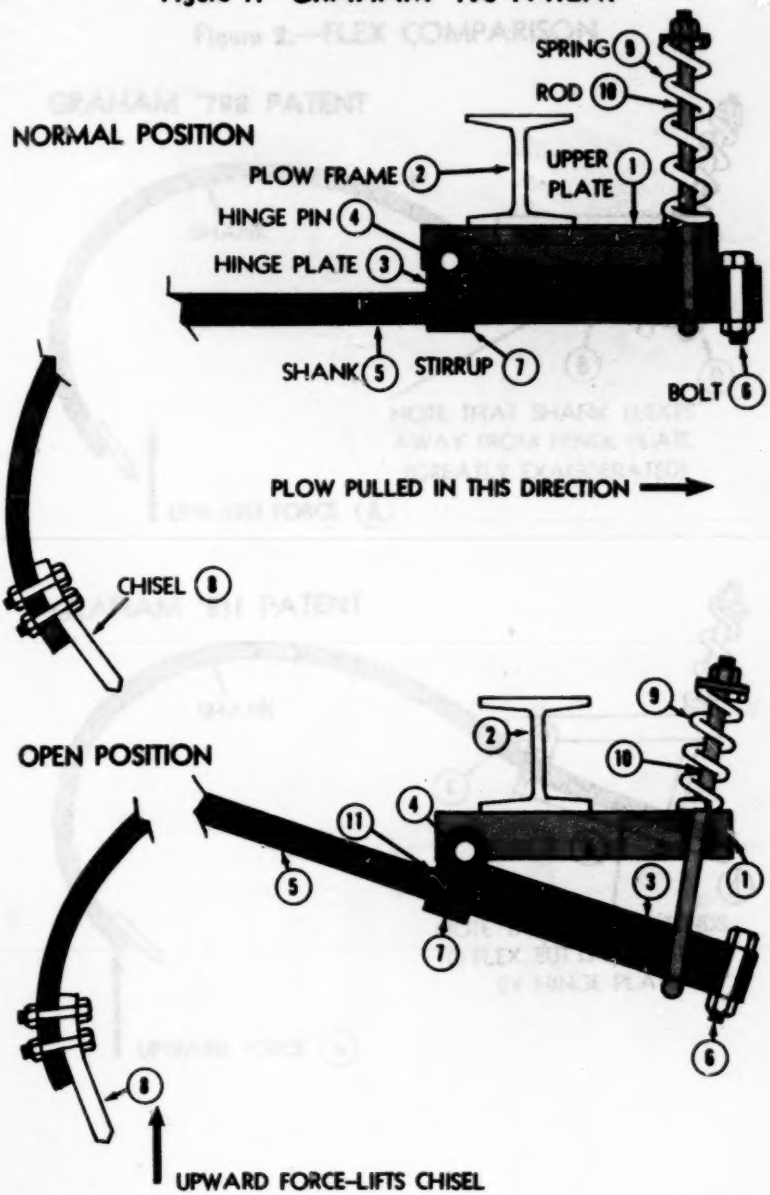

Figure 2.—FLEX COMPARISON

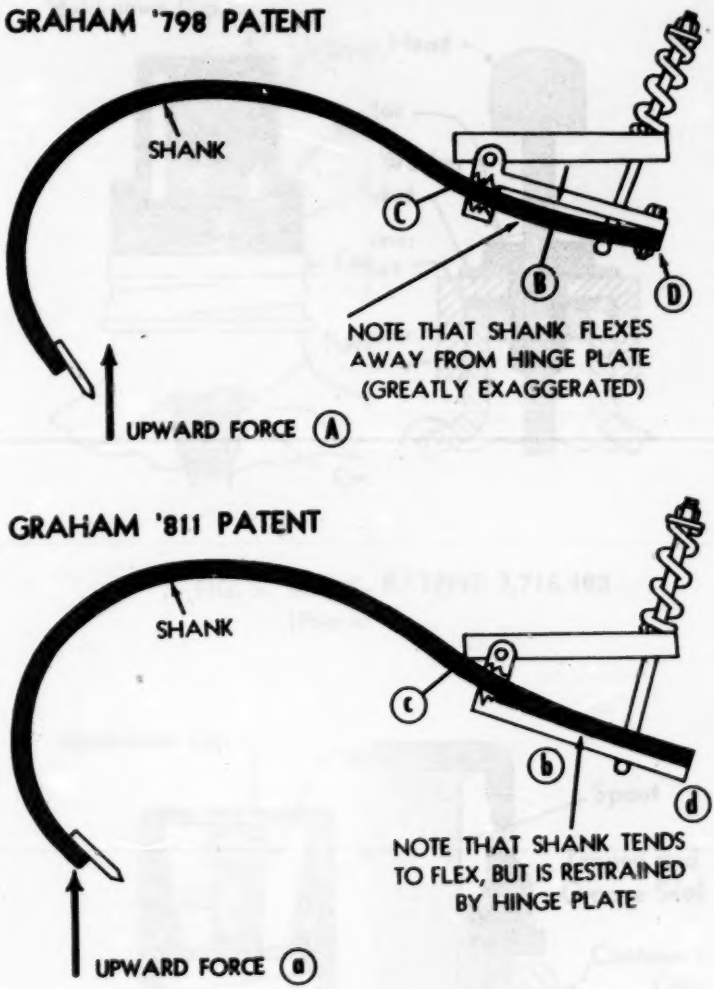

FIG. 3. SCOGGIN PATENT 2,870,943
(The Patent in Issue)

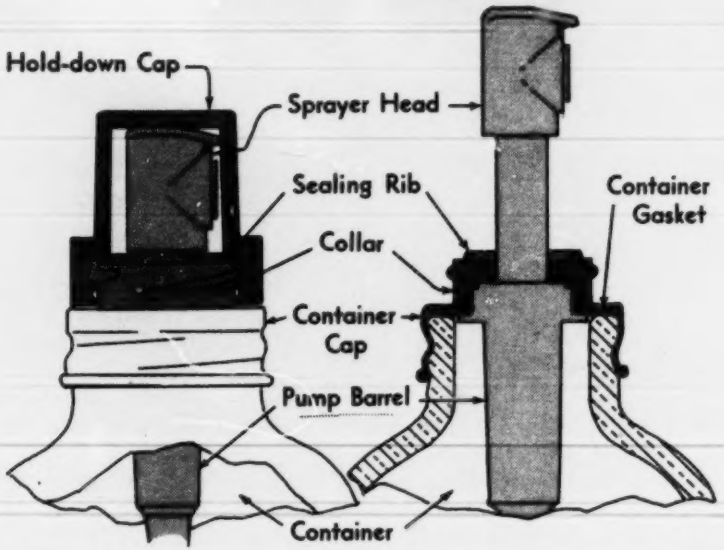


FIG. 4. LOHSE PATENT 2,119,884
(Prior art 1938)

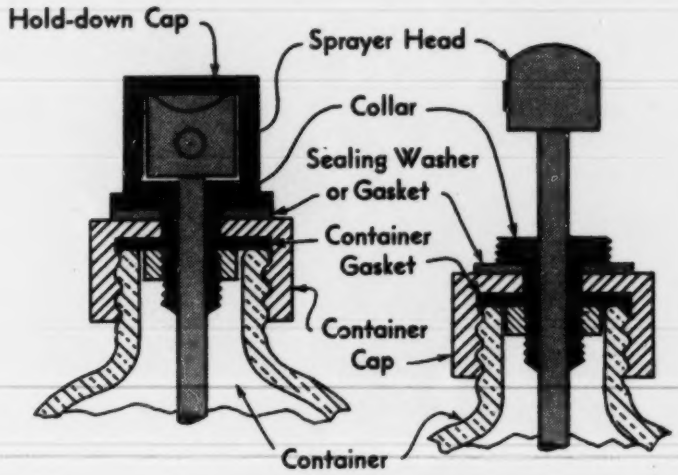


FIG. 5. MELLON PATENT 2,586,687
(Prior art 1952)

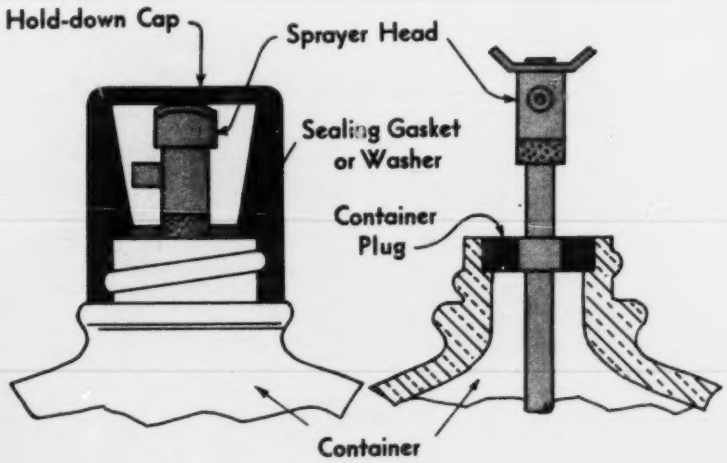

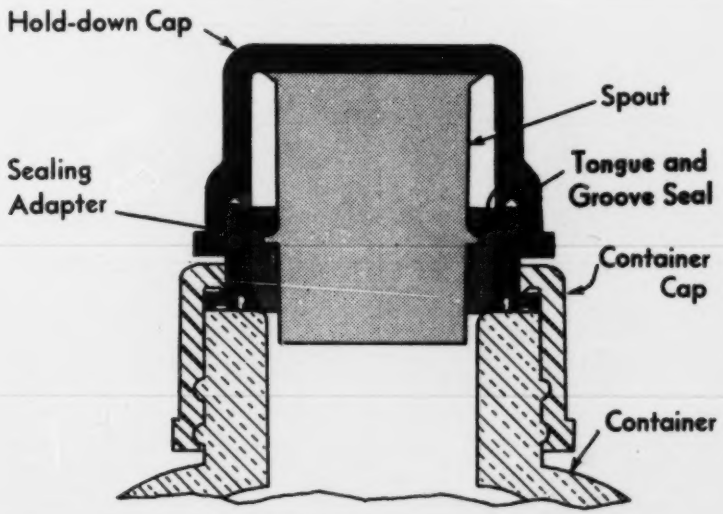
FIG. 6. LIVINGSTONE PATENT 2,715,480
(Prior art 1953)